THE DATASHEET OF

ADT7461AARMZ-R

www.win-source.net 0086-755-83957316

ON Semiconductor

Is Now

To learn more about onsemi™, please visit our website at
www.onsemi.com

onsemi and onsemi and other names, marks, and brands are registered and/or common law trademarks of Semiconductor Components Industries, LLC dba "**onsemi**" or its affiliates and/or subsidiaries in the United States and/or other countries. **onsemi** owns the rights to a number of patents, trademarks, copyrights, trade secrets, and other intellectual property. A listing of **onsemi** product/patent coverage may be accessed at www.onsemi.com/site/pdf/Patent-Marking.pdf. **onsemi** reserves the right to make changes at any time to any products or information herein, without notice. The information herein is provided "as-is" and **onsemi** makes no warranty, representation or guarantee regarding the accuracy of the information, product features, availability, functionality, or suitability of its products for any particular purpose, nor does **onsemi** assume any liability arising out of the application or use of any product or circuit, and specifically disclaims any and all liability, including without limitation special, consequential or incidental damages. Buyer is responsible for its products and applications using **onsemi** products, including compliance with all laws, regulations and safety requirements or standards, regardless of any support or applications information provided by **onsemi**. "Typical" parameters which may be provided in **onsemi** data sheets and/or specifications can and do vary in different applications and actual performance may vary over time. All operating parameters, including "Typicals" must be validated for each customer application by customer's technical experts. **onsemi** does not convey any license under any of its intellectual property rights nor the rights of others. **onsemi** products are not designed, intended, or authorized for use as a critical component in life support systems or any FDA Class 3 medical devices or medical devices with a same or similar classification in a foreign jurisdiction or any devices intended for implantation in the human body. Should Buyer purchase or use **onsemi** products for any such unintended or unauthorized application, Buyer shall indemnify and hold **onsemi** and its officers, employees, subsidiaries, affiliates, and distributors harmless against all claims, costs, damages, and expenses, and reasonable attorney fees arising out of, directly or indirectly, any claim of personal injury or death associated with such unintended or unauthorized use, even if such claim alleges that **onsemi** was negligent regarding the design or manufacture of the part. **onsemi** is an Equal Opportunity/Affirmative Action Employer. This literature is subject to all applicable copyright laws and is not for resale in any manner. Other names and brands may be claimed as the property of others.

ADT7461A

±1°C Temperature Monitor with Series Resistance Cancellation

The ADT7461A is a dual-channel digital thermometer and undertemperature/overtemperature alarm, intended for use in PCs and thermal management systems. It is pin- and register-compatible with the ADM1032 and ADT7461. A feature of the ADT7461A is series resistance cancellation, where up to 1.5 kΩ (typical) of resistance in series with the temperature monitoring diode can be automatically cancelled from the temperature result, allowing noise filtering. The ADT7461A has a configurable $\overline{\text{ALERT}}$ output and an extended, switchable temperature measurement range.

The ADT7461A can measure the temperature of a remote thermal diode accurate to ±1°C and the ambient temperature accurate to ±3°C. The temperature measurement range defaults to 0°C to +127°C, compatible with the ADM1032, but it can be switched to a wider measurement range of –64°C to +191°C.

The ADT7461A communicates over a 2-wire serial interface, compatible with system management bus (SMBus) standards. The default SMBus address of the ADT7461A is 0x4C. An ADT7461A–2 is available with an SMBus address of 0x4D. This is useful if more than one ADT7461A is used on the same SMBus.

An $\overline{\text{ALERT}}$ output signals when the on-chip or remote temperature is out of range. The $\overline{\text{THERM}}$ output is a comparator output that allows on/off control of a cooling fan. The $\overline{\text{ALERT}}$ output can be reconfigured as a second $\overline{\text{THERM}}$ output, if required.

Features

- On-Chip and Remote Temperature Sensor
- 0.25°C Resolution/1°C Accuracy on Remote Channel
- 1°C Resolution/1°C Accuracy on Local Channel
- Automatically Cancels Up to 1.5 kΩ (Typ) of Resistance in Series with Remote Diode to Allow Noise Filtering
- Extended, Switchable Temperature Measurement Range 0°C to +127°C (Default) or –64°C to +191°C
- Pin- and Register-Compatible with ADM1032 and ADT7461
- 2-wire SMBus Serial Interface with SMBus Alert Support
- Programmable Over/Undertemperature Limits
- Offset Registers for System Calibration
- Up to Two Overtemperature Fail-Safe $\overline{\text{THERM}}$ Outputs
- Small 8-lead MSOP
- 240 μA Operating Current, 5 μA Standby Current
- These are Pb-Free Devices*

Applications

- Desktop and Notebook Computers
- Industrial Controllers
- Smart Batteries
- Automotive
- Embedded Systems
- Burn-In Applications
- Instrumentation

ON Semiconductor®

http://onsemi.com

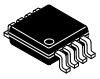

MSOP–8
CASE 846AB

PIN ASSIGNMENT

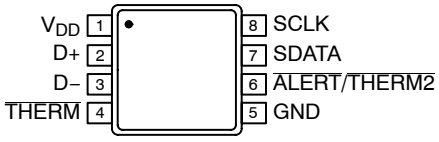

(Top View)

MARKING DIAGRAM

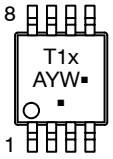

T1x = Refer to Ordering Information Table
A = Assembly Location
Y = Year
W = Work Week
▪ = Pb-Free Package

(Note: Microdot may be in either location)

ORDERING INFORMATION

See detailed ordering and shipping information in the package dimensions section on page 18 of this data sheet.

* For additional information on our Pb-Free strategy and soldering details, please download the ON Semiconductor Soldering and Mounting Techniques Reference Manual, SOLDERRM/D.

© Semiconductor Components Industries, LLC, 2013

April, 2013 – Rev. 8

Publication Order Number:
ADT7461A/D

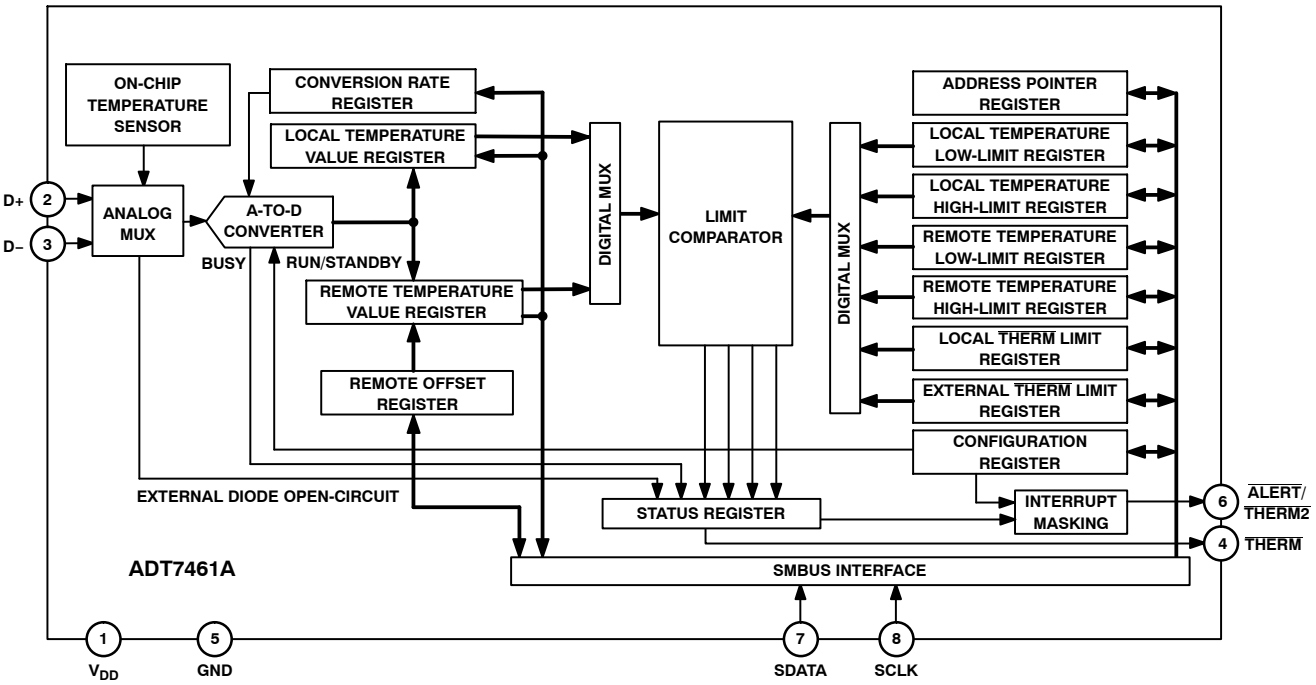

Figure 1. Functional Block Diagram

Table 1. ABSOLUTE MAXIMUM RATINGS

Parameter	Rating	Unit
Positive Supply Voltage (V_{DD}) to GND	−0.3, +3.6	V
D+	−0.3 to V_{DD} + 0.3	V
D− to GND	−0.3 to +0.6	V
SCLK, SDATA, $\overline{\text{ALERT}}$, $\overline{\text{THERM}}$	−0.3 to +3.6	V
Input Current, SDATA, $\overline{\text{THERM}}$	−1, +50	mA
Input Current, D−	±1	mA
ESD Rating, All Pins (Human Body Model)	1500	V
Maximum Junction Temperature (T_J Max)	150	°C
Storage Temperature Range	−65 to +150	°C

Stresses exceeding Maximum Ratings may damage the device. Maximum Ratings are stress ratings only. Functional operation above the Recommended Operating Conditions is not implied. Extended exposure to stresses above the Recommended Operating Conditions may affect device reliability.

NOTE: This device is ESD sensitive. Use standard ESD precautions when handling.

Table 2. THERMAL CHARACTERISTICS

Package Type	θ_{JA}	θ_{JC}	Unit
8-Lead MSOP	142	43.74	°C/W

Table 3. PIN ASSIGNMENT

Pin No.	Mnemonic	Description
1	V_{DD}	Positive Supply, 3.0 V to 3.6 V.
2	D+	Positive Connection to Remote Temperature Sensor.
3	D−	Negative Connection to Remote Temperature Sensor.
4	$\overline{\text{THERM}}$	Open-Drain Output. Can be used to turn a fan on/off or throttle a CPU clock in the event of an overtemperature condition. Requires pullup resistor.
5	GND	Supply Ground Connection.
6	$\overline{\text{ALERT}}/\overline{\text{THERM2}}$	Open-Drain Logic Output Used as Interrupt or SMBus $\overline{\text{ALERT}}$. This can also be configured as a second $\overline{\text{THERM}}$ output. Requires pullup resistor.
7	SDATA	Logic Input/Output, SMBus Serial Data. Open-Drain Output. Requires pullup resistor.
8	SCLK	Logic Input, SMBus Serial Clock. Requires pullup resistor.

Table 4. SMBus TIMING SPECIFICATIONS (Note 1)

Parameter	Limit at T_{MIN} and T_{MAX}	Unit	Description
f_{SCLK}	400	kHz max	–
t_{LOW}	1.3	μs min	Clock Low Period, between 10% Points
t_{HIGH}	0.6	μs min	Clock High Period, between 90% Points
t_R	300	ns max	Clock/Data Rise Time
t_F	300	ns max	Clock/Data Fall Time
$t_{SU;\ STA}$	600	ns min	Start Condition Setup Time
$t_{HD;\ STA}$ (Note 2)	600	ns min	Start Condition Hold Time
$t_{SU;\ DAT}$ (Note 3)	100	ns min	Data Setup Time
$t_{SU;\ STO}$ (Note 4)	600	ns min	Stop Condition Setup Time
t_{BUF}	1.3	μs min	Bus Free Time between Stop and Start Conditions

1. Guaranteed by design, but not production tested.
2. Time from 10% of SDATA to 90% of SCLK.
3. Time for 10% or 90% of SDATA to 10% of SCLK.
4. Time for 90% of SCLK to 10% of SDATA.

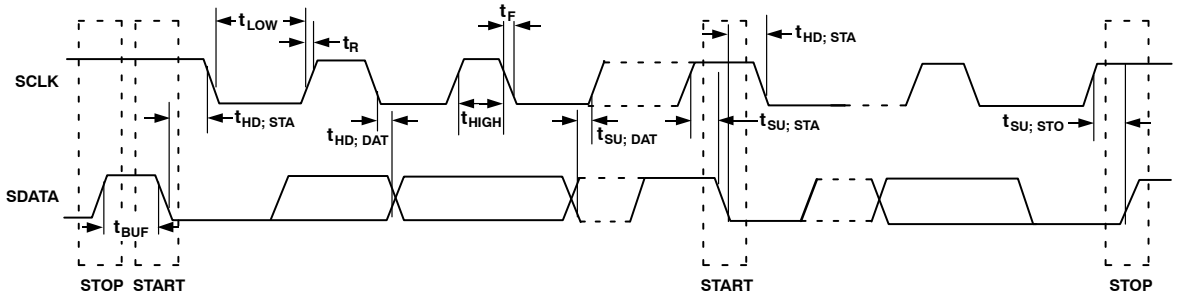

Figure 2. Serial Bus Timing

Table 5. ELECTRICAL CHARACTERISTICS (T_A = −40°C to +125°C, V_{DD} = 3.0 V to 3.6 V, unless otherwise noted.)

Parameter	Conditions	Min	Typ	Max	Unit
Power Supply					
Supply Voltage, V_{DD}		3.0	3.30	3.6	V
Average Operating Supply Current, I_{DD}	0.0625 Conversions/Sec Rate (Note 1) Standby Mode	– –	240 5.0	350 30	μA
Undervoltage Lockout Threshold	V_{DD} Input, Disables ADC, Rising Edge	–	2.55	–	V
Power-On-Reset Threshold		1.0	–	2.5	V
Temperature-To-Digital Converter					
Local Sensor Accuracy	0°C ≤ T_A ≤ +70°C 0°C ≤ T_A ≤ +85°C −40°C ≤ T_A ≤ +100°C	– – –	– – –	±1.0 ±1.5 ±2.5	°C
Resolution		–	1.0	–	°C
Remote Diode Sensor Accuracy	0°C ≤ T_A ≤ +70°C, −55°C ≤ T_D (Note 2) ≤ +150°C 0°C ≤ T_A ≤ +85°C, −55°C ≤ T_D (Note 2) ≤ +150°C −40°C ≤ T_A ≤ +100°C, −55°C ≤ T_D (Note 2) ≤ +150°C	– – –	– – –	±1.0 ±1.5 ±2.5	°C
Resolution		–	0.25	–	°C
Remote Sensor Source Current	High Level (Note 3) Middle Level (Note 3) Low Level (Note 3)	– – –	220 82 13.5	– – –	μA
Conversion Time	From Stop Bit to Conversion Complete, One-shot Mode with Averaging Switched On	–	40	52	ms
	One-shot Mode with Averaging Off (That Is, Conversion Rate = 16-, 32-, or 64-conversions per Second)	–	6.0	8.0	ms
Maximum Series Resistance Cancelled	Resistance Split Evenly on Both the D+ and D− Inputs	–	1.5	–	kΩ
Open-Drain Digital Outputs ($\overline{\text{THERM}}$, $\overline{\text{ALERT}}$/$\overline{\text{THERM2}}$)					
Output Low Voltage, V_{OL}	I_{OUT} = −6.0 mA	–	–	0.4	V
High Level Output Leakage Current, I_{OH}	V_{OUT} = V_{DD}	–	0.1	1.0	μA
SMBus Interface (Note 3 and 4)					
Logic Input High Voltage, V_{IH} SCLK, SDATA	3.0 V ≤ V_{DD} ≤ 3.6 V	2.1	–	–	V
Logic Input Low Voltage, V_{IL} SCLK, SDATA	3.0 V ≤ V_{DD} ≤ 3.6 V	–	–	0.8	V
Hysteresis		–	500	–	mV
SDA Output Low Voltage, V_{OL}		–	–	0.4	mA
Logic Input Current, I_{IH}, I_{IL}		−1.0	–	+1.0	μA
SMBus Input Capacitance, SCLK, SDATA		–	5.0	–	pF
SMBus Clock Frequency		–	–	400	kHz
SMBus Timeout (Note 5)	User Programmable	–	25	64	ms
SCLK Falling Edge to SDATA Valid Time	Master Clocking in Data	–	–	1.0	μs

1. See Table 10 for information on other conversion rates.
2. Guaranteed by characterization, but not production tested.
3. Guaranteed by design, but not production tested.
4. See SMBus Timing Specifications section for more information.
5. Disabled by default. Detailed procedures to enable it are in the Serial Bus Interface section of the datasheet.

TYPICAL PERFORMANCE CHARACTERISTICS

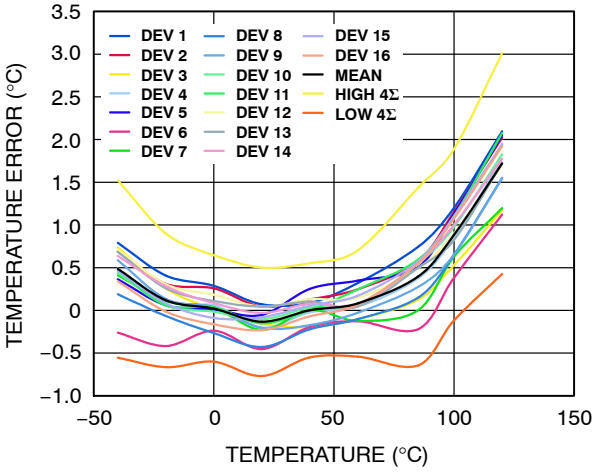

Figure 3. Local Temperature Error vs. Temperature

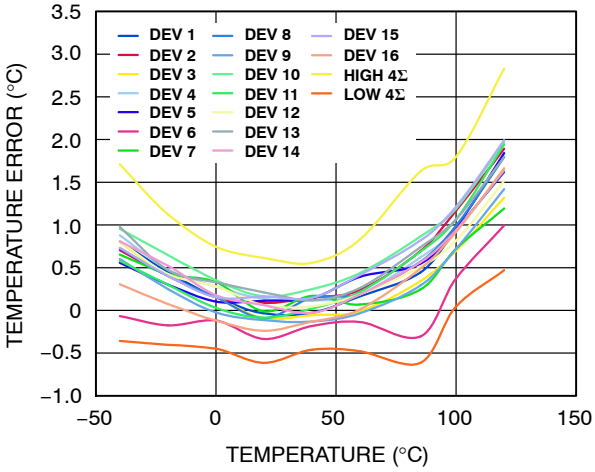

Figure 4. Remote Temperature Error vs. Actual Temperature

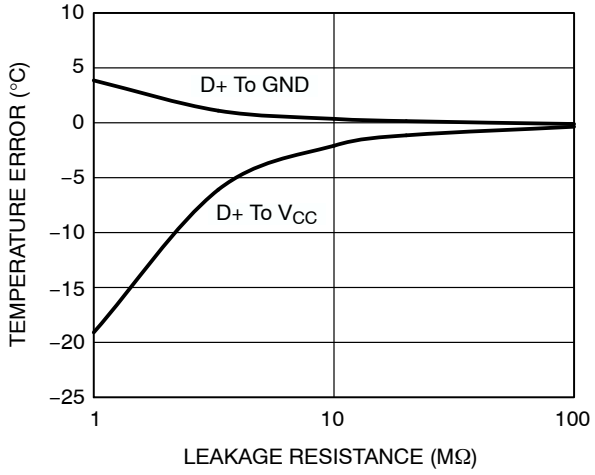

Figure 5. Temperature Error vs. D+/D− Leakage Resistance

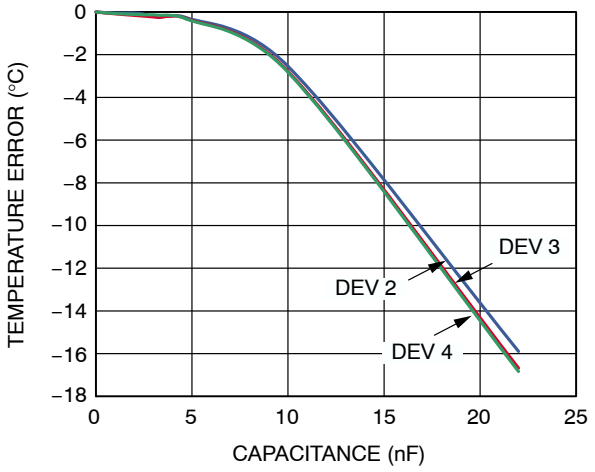

Figure 6. Temperature Error vs. D+/D− Capacitance

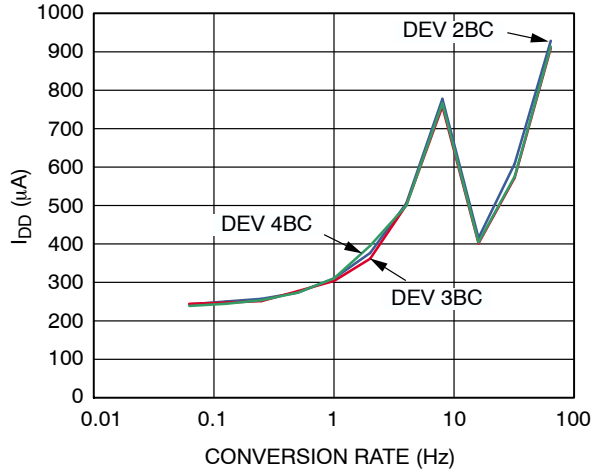

Figure 7. Operating Supply Current vs. Conversion Rate

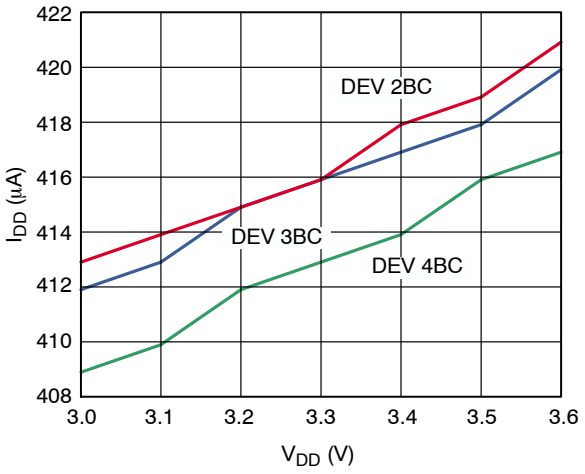

Figure 8. Operating Supply Current vs. Voltage

TYPICAL PERFORMANCE CHARACTERISTICS (Cont'd)

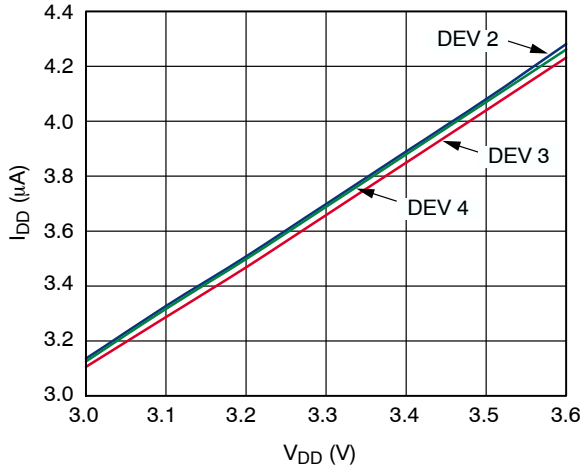

Figure 9. Standby Supply Current vs. Voltage

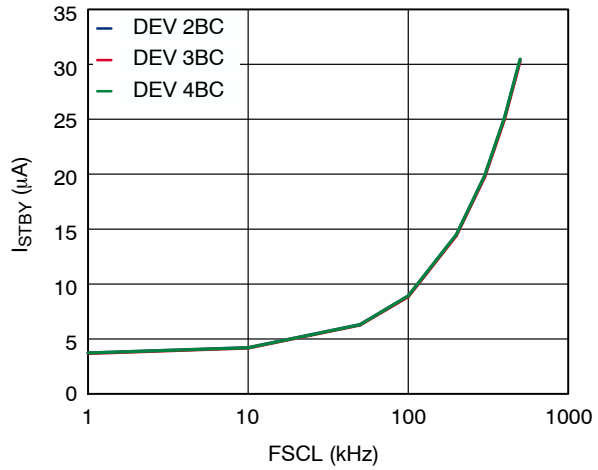

Figure 10. Standby Supply Current vs. Clock Frequency

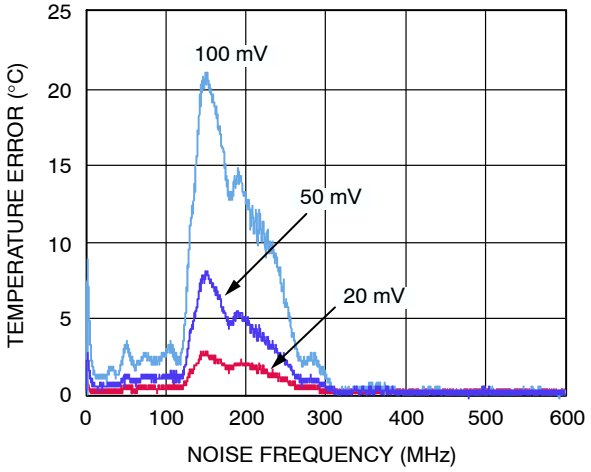

Figure 11. Temperature Error vs. Common-Mode Noise Frequency

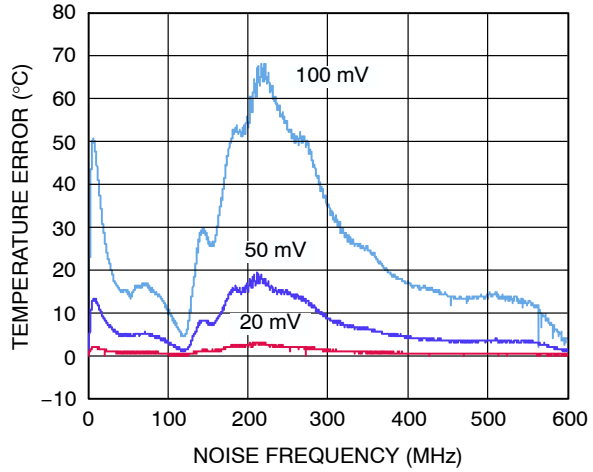

Figure 12. Temperature Error vs. Differential-Mode Noise Frequency

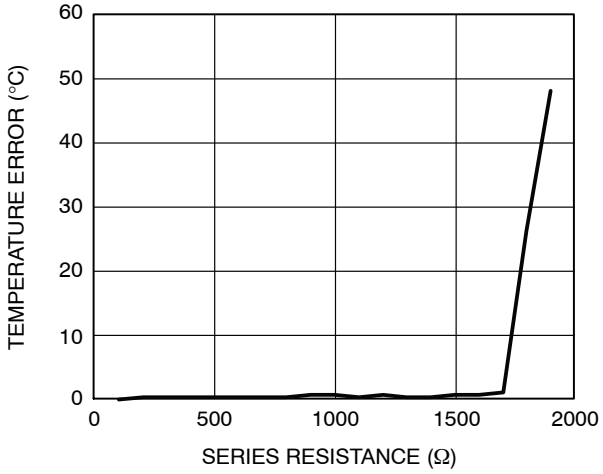

Figure 13. Temperature Error vs. Series Resistance

Differences between the ADT7461A and the ADT7461

Although the ADT7461A is pin- and register-compatible with the ADT7461, there are some specification differences between the two devices. A summary of these differences is shown below in Table 6.

Table 6. DIFFERENCES BETWEEN THE ADT7461A AND THE ADT7461

Specification	ADT7461A	ADT7461	Unit
Supply Voltage	3.0 to 3.6	3.0 to 5.5	V
Maximum Local Sensor Accuracy	1.0	3.0	°C
Maximum Series Resistance Cancellation	1.5	3.0	kΩ
Average Operating Supply Current			μA
16 Conversions/Sec	240	170	
Standby Mode	5.0	5.5	
Max Conversion Time			ms
One Shot, Averaging On	52	114.6	
One Shot, Averaging Off	8.0	12.56	
Remote Sensor Current Levels			μA
High	220	96	
Mid	82	36	
Low	13.5	6.0	

Theory of Operation

The ADT7461A is a local and remote temperature sensor and over/under temperature alarm, with the added ability to automatically cancel the effect of 1.5 kΩ (typical) of resistance in series with the temperature monitoring diode. When the ADT7461A is operating normally, the on-board ADC operates in a free running mode. The analog input multiplexer alternately selects either the on-chip temperature sensor to measure its local temperature or the remote temperature sensor. The ADC digitizes these signals and the results are stored in the local and remote temperature value registers.

The local and remote measurement results are compared with the corresponding high, low, and $\overline{\text{THERM}}$ temperature limits, stored in eight on-chip registers. Out-of-limit comparisons generate flags that are stored in the status register. A result that exceeds the high temperature limit or the low temperature limit causes the $\overline{\text{ALERT}}$ output to assert. The $\overline{\text{ALERT}}$ output also asserts if an external diode fault is detected. Exceeding the $\overline{\text{THERM}}$ temperature limits causes the $\overline{\text{THERM}}$ output to assert low. The $\overline{\text{ALERT}}$ output can be reprogrammed as a second $\overline{\text{THERM}}$ output.

The limit registers are programmed and the device controlled and configured via the serial SMBus. The contents of any register are also read back via the SMBus.

Control and configuration functions consist of switching the device between normal operation and standby mode, selecting the temperature measurement range, masking or enabling the $\overline{\text{ALERT}}$ output, switching Pin 6 between $\overline{\text{ALERT}}$ and $\overline{\text{THERM2}}$, and selecting the conversion rate.

Series Resistance Cancellation

Parasitic resistance to the D+ and D− inputs to the ADT7461A, seen in series with the remote diode, is caused by a variety of factors, including PCB track resistance and track length. This series resistance appears as a temperature offset in the remote sensor's temperature measurement. This error typically causes a 0.5°C offset per ohm of parasitic resistance in series with the remote diode.

The ADT7461A automatically cancels the effect of this series resistance on the temperature reading, giving a more accurate result, without the need for user characterization of this resistance. The ADT7461A is designed to automatically cancel typically up to 1.5 kΩ of resistance. By using an advanced temperature measurement method, this process is transparent to the user. This feature permits resistances to be added to the sensor path to produce a filter, allowing the part to be used in noisy environments. See the section on Noise Filtering for more details.

Temperature Measurement Method

A simple method of measuring temperature is to exploit the negative temperature coefficient of a diode, measuring the base emitter voltage (V_{BE}) of a transistor operated at constant current. However, this technique requires calibration to null the effect of the absolute value of V_{BE}, which varies from device to device.

The technique used in the ADT7461A measures the change in V_{BE} when the device operates at three different currents. Previous devices used only two operating currents, but it is the use of a third current that allows automatic cancellation of resistances in series with the external temperature sensor.

Figure 14 shows the input signal conditioning used to measure the output of an external temperature sensor. This figure shows the external sensor as a substrate transistor, but it can equally be a discrete transistor. If a discrete transistor is used, the collector is not grounded but is linked to the base. To prevent ground noise interfering with the measurement, the more negative terminal of the sensor is not referenced to ground, but is biased above ground by an internal diode at the D− input. C1 may be added as a noise filter (a recommended maximum value of 1000 pF). However, a better option in noisy environments is to add a filter, as described in the Noise Filtering section. See the Layout Considerations section for more information on C1.

To measure ΔV_{BE}, the operating current through the sensor is switched among three related currents. As shown in Figure 14, $N1 \times I$ and $N2 \times I$ are different multiples of the current, I. The currents through the temperature diode are switched between I and $N1 \times I$, giving ΔV_{BE1}; and then between I and $N2 \times I$, giving ΔV_{BE2}. The temperature is then calculated using the two ΔV_{BE} measurements. This method also cancels the effect of any series resistance on the temperature measurement.

The resulting ΔV_{BE} waveforms are passed through a 65 kHz low-pass filter to remove noise and then to a chopper-stabilized amplifier. This amplifies and rectifies the waveform to produce a dc voltage proportional to ΔV_{BE}. The ADC digitizes this voltage producing a temperature measurement. To reduce the effects of noise, digital filtering is performed by averaging the results of 16 measurement cycles for low conversion rates. At rates of 16-, 32-, and 64-conversions/second, no digital averaging occurs.

Signal conditioning and measurement of the internal temperature sensor are performed in the same manner.

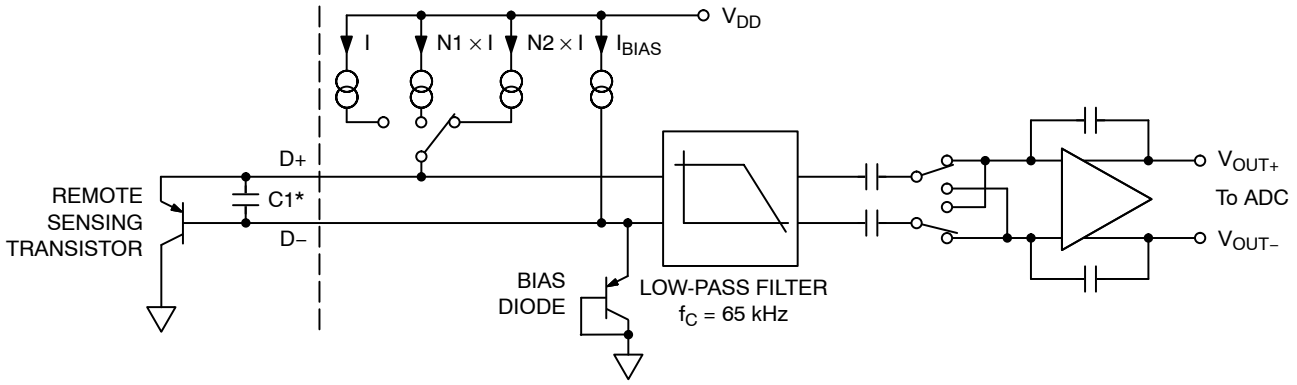

*CAPACITOR C1 IS OPTIONAL. IT IS ONLY NECESSARY IN NOISY ENVIRONMENTS. C1 = 1000 pF MAX.

Figure 14. Input Signal Conditioning

Temperature Measurement Results

The results of the local and remote temperature measurements are stored in the local and remote temperature value registers and compared with limits programmed into the local and remote high and low limit registers.

The local temperature value is in Register 0x00 and has a resolution of 1°C. The external temperature value is stored in two registers, with the upper byte in Register 0x01 and the lower byte in Register 0x10. Only the two MSBs in the external temperature low byte are used giving the external temperature measurement a resolution of 0.25°C. Table 7 lists the data format for the external temperature low byte.

Table 7. EXTENDED TEMPERATURE RESOLUTION (REMOTE TEMPERATURE LOW BYTE)

Extended Resolution	Remote Temperature Low Byte
0.00°C	0 000 0000
0.25°C	0 100 0000
0.50°C	1 000 0000
0.75°C	1 100 0000

When reading the full external temperature value, read the LSB first. This causes the MSB to be locked (that is, the ADC does not write to it) until it is read. This feature ensures that the results read back from the two registers come from the same measurement.

Temperature Measurement Range

The temperature measurement range for both internal and external measurements is, by default, 0°C to +127°C. However, the ADT7461A can be operated using an extended temperature range. The extended measurement range is −64°C to +191°C. Therefore, the ADT7461A can be used to measure the full temperature range of an external diode, from −55°C to +150°C.

The extended temperature range is selected by setting Bit 2 of the configuration register to 1. The temperature range is 0°C to 127°C when Bit 2 equals 0. A valid result is available in the next measurement cycle after changing the temperature range.

In extended temperature mode, the upper and lower temperature that can be measured by the ADT7461A is limited by the remote diode selection. The temperature registers can have values from −64°C to +191°C. However, most temperature sensing diodes have a maximum temperature range of −55°C to +150°C. Above +150°C, they may lose their semiconductor characteristics and approximate conductors instead. This results in a diode short. In this case, a read of the temperature result register gives the last good temperature measurement. Therefore, the temperature measurement on the external channel may not be accurate for temperatures that are outside the operating range of the remote sensor.

It should be noted that although both local and remote temperature measurements can be made while the part is in extended temperature mode, the ADT7461A itself should not be exposed to temperatures greater than those specified in the absolute maximum ratings section. Further, the device is only guaranteed to operate as specified at ambient temperatures from −40°C to +120°C.

Temperature Data Format

The ADT7461A has two temperature data formats. When the temperature measurement range is from 0°C to 127°C (default), the temperature data format for both internal and external temperature results is binary. When the measurement range is in extended mode, an offset binary data format is used

for both internal and external results. Temperature values are offset by 64°C in the offset binary data format. Examples of temperatures in both data formats are shown in Table 8.

Table 8. TEMPERATURE DATA FORMAT (TEMPERATURE HIGH BYTE)

Temperature	Binary	Offset Binary (Note 1)
–55°C	0 000 0000 (Note 2)	0 000 1001
0°C	0 000 0000	0 100 0000
+1°C	0 000 0001	0 100 0001
+10°C	0 000 1010	0 100 1010
+25°C	0 001 1001	0 101 1001
+50°C	0 011 0010	0 111 0010
+75°C	0 100 1011	1 000 1011
+100°C	0 110 0100	1 010 0100
+125°C	0 111 1101	1 011 1101
+127°C	0 111 1111	1 011 1111
+150°C	0 111 1111 (Note 3)	1 101 0110

1. Offset binary scale temperature values are offset by 64°C.
2. Binary scale temperature measurement returns 0°C for all temperatures < 0°C.
3. Binary scale temperature measurement returns 127°C for all temperatures > 127°C.

The user can switch between measurement ranges at any time. Switching the range likewise switches the data format. The next temperature result following the switching is reported back to the register in the new format. However, the contents of the limit registers do not change. It is up to the user to ensure that when the data format changes, the limit registers are reprogrammed as necessary. More information on this is found in the Limit Registers section.

ADT7461A Registers

The ADT7461A contains 22, 8-bit registers in total. These registers store the results of remote and local temperature measurements, high and low temperature limits, and configure and control the device. See the Address Pointer Register section through the Consecutive $\overline{\text{ALERT}}$ Register section of this data sheet for more information on the ADT7461A registers. Additional details are shown in Table 9 through Table 13. The entire register map is available in Table 14.

Address Pointer Register

The address pointer register itself does not have, nor does it require, an address because the first byte of every write operation is automatically written to this register. The data in this first byte always contains the address of another register on the ADT7461A that is stored in the address pointer register. It is to this register address that the second byte of a write operation is written, or to which a subsequent read operation is performed.

The power-on default value of the address pointer register is 0x00. Therefore, if a read operation is performed immediately after power-on, without first writing to the address pointer, the value of the local temperature is returned because its register address is 0x00.

Temperature Value Registers

The ADT7461A has three registers to store the results of local and remote temperature measurements. These registers can only be written to by the ADC and can be read by the user over the SMBus. The local temperature value register is at Address 0x00.

The external temperature value high byte register is at Address 0x01, with the low byte register at Address 0x10. The power-on default for all three registers is 0x00.

Configuration Register

The configuration register is Address 0x03 at read and Address 0x09 at write. Its power-on default is 0x00. Only four bits of the configuration register are used. Bit 0, Bit 1, Bit 3, and Bit 4 are reserved; the user does not write to them.

Bit 7 of the configuration register masks the $\overline{\text{ALERT}}$ output. If Bit 7 is 0, the $\overline{\text{ALERT}}$ output is enabled. This is the power-on default. If Bit 7 is set to 1, the $\overline{\text{ALERT}}$ output is disabled. This applies only if Pin 6 is configured as $\overline{\text{ALERT}}$. If Pin 6 is configured as $\overline{\text{THERM2}}$, then the value of Bit 7 has no effect.

If Bit 6 is set to 0, which is power-on default, the device is in operating mode with ADC converting. If Bit 6 is set to 1, the device is in standby mode and the ADC does not convert. The SMBus does, however, remain active in standby mode; therefore, values can be read from or written to the ADT7461A via the SMBus. The $\overline{\text{ALERT}}$ and $\overline{\text{THERM}}$ outputs are also active in standby mode. Changes made to the registers in standby mode that affect the $\overline{\text{THERM}}$ or $\overline{\text{ALERT}}$ outputs cause these signals to be updated.

Bit 5 determines the configuration of Pin 6 on the ADT7461A. If Bit 5 is 0 (default), then Pin 6 is configured as an $\overline{\text{ALERT}}$ output. If Bit 5 is 1, then Pin 6 is configured as a $\overline{\text{THERM2}}$ output. Bit 7, the $\overline{\text{ALERT}}$ mask bit, is only active when Pin 6 is configured as an $\overline{\text{ALERT}}$ output. If Pin 6 is set up as a $\overline{\text{THERM2}}$ output, then Bit 7 has no effect.

Bit 2 sets the temperature measurement range. If Bit 2 is 0 (default value), the temperature measurement range is set between 0°C to +127°C. Setting Bit 2 to 1 sets the measurement range to the extended temperature range (−64°C to +191°C).

Table 9. CONFIGURATION REGISTER BIT ASSIGNMENTS

Bit	Name	Function	Power-On Default
7	MASK1	0 = $\overline{\text{ALERT}}$ Enabled 1 = $\overline{\text{ALERT}}$ Masked	0
6	RUN/STOP	0 = Run 1 = Standby	0
5	$\overline{\text{ALERT}}$/ $\overline{\text{THERM2}}$	0 = $\overline{\text{ALERT}}$ 1 = $\overline{\text{THERM2}}$	0
4, 3	Reserved		0
2	Temperature Range Select	0 = 0°C to 127°C 1 = Extended Range	0
1, 0	Reserved		0

Conversion Rate Register

The conversion rate register is Address 0x04 at read and Address 0x0A at write. The lowest four bits of this register are used to program the conversion rate by dividing the internal oscillator clock by 1, 2, 4, 8, 16, 32, 64, 128, 256, 512, or 1024 to give conversion times from 15.5 ms (Code 0x0A) to 16 seconds (Code 0x00). For example, a conversion rate of eight conversions per second means that beginning at 125 ms intervals, the device performs a conversion on the internal and the external temperature channels.

The conversion rate register can be written to and read back over the SMBus. The higher four bits of this register are unused and must be set to 0. The default value of this register is 0x08, giving a rate of 16 conversions per second. Use of slower conversion times greatly reduces the device power consumption.

Table 10. CONVERSION RATE REGISTER CODES

Code	Conversion/ Second	Time (Seconds)
0x00	0.0625	16
0x01	0.125	8
0x02	0.25	4
0x03	0.5	2
0x04	1	1
0x05	2	500 m
0x06	4	250 m
0x07	8	125 m
0x08	16	62.5 m
0x09	32	31.25 m
0x0A	64	15.5 m
0x0B to 0xFF	Reserved	

Limit Registers

The ADT7461A has eight limit registers: high, low, and $\overline{\text{THERM}}$ temperature limits for both local and remote temperature measurements. The remote temperature high and low limits span two registers each, to contain an upper and lower byte for each limit. There is also a $\overline{\text{THERM}}$ hysteresis register. All limit registers can be written to, and read back over, the SMBus. See Table 14 for details of the limit register addresses and their power-on default values.

When Pin 6 is configured as an $\overline{\text{ALERT}}$ output, the high limit registers perform a > comparison, while the low limit registers perform a ≤ comparison. For example, if the high limit register is programmed with 80°C, then measuring 81°C results in an out-of-limit condition, setting a flag in the status register. If the low limit register is programmed with 0°C, measuring 0°C or lower results in an out-of-limit condition.

Exceeding either the local or remote $\overline{\text{THERM}}$ limit asserts $\overline{\text{THERM}}$ low. When Pin 6 is configured as $\overline{\text{THERM2}}$, exceeding either the local or remote high limit asserts $\overline{\text{THERM2}}$ low. A default hysteresis value of 10°C is provided that applies to both $\overline{\text{THERM}}$ channels. This hysteresis value can be reprogrammed to any value after powerup (Register Address 0x21).

It is important to remember that the temperature limits data format is the same as the temperature measurement data format. Therefore, if the temperature measurement uses default binary, then the temperature limits also use the binary scale. If the temperature measurement scale is switched, however, the temperature limits do not automatically switch. The user must reprogram the limit registers to the desired value in the correct data format. For example, if the remote low limit is set at 10°C with the default binary scale, the limit register value is 0000 1010b. If the scale is switched to offset binary, the value in the low temperature limit register needs to be reprogrammed to 0100 1010b.

Status Register

The status register is a read-only register at Address 0x02. It contains status information for the ADT7461A.

When Bit 7 of the status register is high, it indicates that the ADC is busy converting. The other bits in this register flag the out-of-limit temperature measurements (Bit 6 to Bit 3, and Bit 1 to Bit 0) and the remote sensor open circuit (Bit 2).

If Pin 6 is configured as an $\overline{\text{ALERT}}$ output, the following applies: If the local temperature measurement exceeds its limits, Bit 6 (high limit) or Bit 5 (low limit) of the status register asserts to flag this condition. If the remote temperature measurement exceeds its limits, then Bit 4 (high limit) or Bit 3 (low limit) asserts. Bit 2 asserts to flag an open circuit condition on the remote sensor. These five flags are NOR'ed together, so if any of them is high, the $\overline{\text{ALERT}}$ interrupt latch is set and the $\overline{\text{ALERT}}$ output goes low.

Reading the status register clears the five flags, Bit 6 to Bit 2, provided the error conditions causing the flags to be set have gone away. A flag bit can be reset only if the corresponding value register contains an in-limit measurement or if the sensor is good.

The $\overline{\text{ALERT}}$ interrupt latch is not reset by reading the status register. It resets when the $\overline{\text{ALERT}}$ output has been serviced by the master reading the device address, provided the error condition has gone away and the status register flag bits are reset.

When Flag 1 and/or Flag 0 are set, the $\overline{\text{THERM}}$ output goes low to indicate that the temperature measurements are outside the programmed limits. The $\overline{\text{THERM}}$ output does not need to be reset, unlike the $\overline{\text{ALERT}}$ output. Once the measurements are within the limits, the corresponding status register bits are automatically reset and the $\overline{\text{THERM}}$ output goes high. The user may add hysteresis by programming Register 0x21. The $\overline{\text{THERM}}$ output is reset only when the temperature falls to limit value minus the hysteresis value.

When Pin 6 is configured as $\overline{\text{THERM2}}$, only the high temperature limits are relevant. If Flag 6 and/or Flag 4 are set, the $\overline{\text{THERM2}}$ output goes low to indicate that the temperature measurements are outside the programmed limits. Flag 5 and Flag 3 have no effect on $\overline{\text{THERM2}}$. The behavior of $\overline{\text{THERM2}}$ is otherwise the same as $\overline{\text{THERM}}$.

Table 11. STATUS REGISTER BIT ASSIGNMENTS

Bit	Name	Function
7	BUSY	1 when ADC is converting
6	LHIGH (Note 1)	1 when local high temperature limit is tripped
5	LLOW (Note 1)	1 when local low temperature limit is tripped
4	RHIGH (Note 1)	1 when remote high temperature limit is tripped
3	RLOW (Note 1)	1 when remote low temperature limit is tripped
2	OPEN (Note 1)	1 when remote sensor is an open circuit
1	RTHRM	1 when remote $\overline{\text{THERM}}$ limit is tripped
0	LTHRM	1 when local $\overline{\text{THERM}}$ limit is tripped

1. These flags stay high until the status register is read or they are reset by POR unless Pin 6 is configured as $\overline{\text{THERM2}}$. Then, only Bit 2 remains high until the status register is read or is reset by POR.

Offset Register

Offset errors can be introduced into the remote temperature measurement by clock noise or when the thermal diode is located away from the hot spot. To achieve the specified accuracy on this channel, these offsets must be removed.

The offset value is stored as a 10-bit, twos complement value in Register 0x11 (high byte) and Register 0x12 (low byte, left justified). Only the upper two bits of Register 0x12 are used. The MSB of Register 0x11 is the sign bit. The minimum, programmable offset is −128°C, and the maximum is +127.75°C. The value in the offset register is added to, or subtracted from, the measured value of the remote temperature.

The offset register powers up with a default value of 0°C and has no effect unless the user writes a different value to it.

Table 12. SAMPLE OFFSET REGISTER CODES

Offset Value	0x11	0x12
−128°C	1000 0000	00 00 0000
−4°C	1111 1100	00 00 0000
−1°C	1111 1111	00 000000
−0.25°C	1111 1111	10 00 0000
0°C	0000 0000	00 00 0000
+0.25°C	0000 0000	01 00 0000
+1°C	0000 0001	00 00 0000
+4°C	0000 0100	00 00 0000
+127.75°C	0111 1111	11 00 0000

One-Shot Register

The one-shot register is used to initiate a conversion and comparison cycle when the ADT7461A is in standby mode, after which the device returns to standby. Writing to the one-shot register address (0x0F) causes the ADT7461A to perform a conversion and comparison on both the internal and the external temperature channels. This is not a data register as such, and it is the write operation to Address 0x0F that causes the one-shot conversion. The data written to this address is irrelevant and is not stored.

Consecutive $\overline{\text{ALERT}}$ Register

The value written to this register determines how many out-of-limit measurements must occur before an $\overline{\text{ALERT}}$ is generated. The default value is that one out-of-limit measurement generates an $\overline{\text{ALERT}}$. The maximum value that can be chosen is 4. The purpose of this register is to allow the user to perform some filtering of the output. This is particularly useful at the fastest three conversion rates, where no averaging takes place. This register is at Address 0x22.

Table 13. CONSECUTIVE $\overline{\text{ALERT}}$ REGISTER CODES

Register Value	Number of Out-of-Limit Measurements Required
yxxx 000x	1
yxxx 001x	2
yxxx 011x	3
yxxx 111x	4

NOTE: x = don’t care bits, and y = SMBus timeout bit. Default = 0. See SMBus section for more information.

Table 14. LIST OF REGISTERS

Read Address (Hex)	Write Address (Hex)	Name	Power-On Default
Not Applicable	Not Applicable	Address Pointer	Undefined
00	Not Applicable	Local Temperature Value	0000 0000 (0x00)
01	Not Applicable	External Temperature Value High Byte	0000 0000 (0x00)
02	Not Applicable	Status	Undefined
03	09	Configuration	0000 0000 (0x00)
04	0A	Conversion Rate	0000 1000 (0x08)
05	0B	Local Temperature High Limit	0101 0101 (0x55) (85°C)
06	0C	Local Temperature Low Limit	0000 0000 (0x00) (0°C)
07	0D	External Temperature High Limit High Byte	0101 0101 (0x55) (85°C)
08	0E	External Temperature Low Limit High Byte	0000 0000 (0x00) (0°C)
Not Applicable	0F (Note 1)	One-Shot	
10	Not Applicable	External Temperature Value Low Byte	0000 0000
11	11	External Temperature Offset High Byte	0000 0000
12	12	External Temperature Offset Low Byte	0000 0000
13	13	External Temperature High Limit Low Byte	0000 0000
14	14	External Temperature Low Limit Low Byte	0000 0000
19	19	External $\overline{\text{THERM}}$ Limit	0101 0101 (0x55) (85°C)
20	20	Local $\overline{\text{THERM}}$ Limit	0101 0101 (0x55) (85°C)
21	21	$\overline{\text{THERM}}$ Hysteresis	0000 1010 (0x0A) (10°C)
22	22	Consecutive $\overline{\text{ALERT}}$	0000 0001 (0x01)
FE	Not Applicable	Manufacturer ID	0100 0001 (0x41)
FF	Not Applicable	Die Revision Code	0101 0111 (0x57)

1. Writing to Address 0x0F causes the ADT7461A to perform a single measurement. It is not a data register, and it does not matter what data is written to it.

Serial Bus Interface

Control of the ADT7461A is carried out via the serial bus. The ADT7461A is connected to this bus as a slave device, under the control of a master device.

The ADT7461A has an SMBus timeout feature. When this is enabled, the SMBus times out after typically 25 ms of no activity. However, this feature is not enabled by default. Bit 7 of the consecutive alert register (Address = 0x22) should be set to enable it.

Addressing the Device

In general, every SMBus device has a 7-bit device address, except for some devices that have extended 10-bit addresses. When the master device sends a device address over the bus, the slave device with that address responds. The ADT7461Ais available with one device address, 0x4C (1001 100b). An ADT7461A−2 is also available.

The ADT7461A−2 has an SMBus address of 0x4D (1001 101b). This is to allow two ADT7461A devices on the same bus, or if the default address conflicts with an existing device on the SMBus. The serial bus protocol operates as follows:

1. The master initiates a data transfer by establishing a start condition, defined as a high-to-low transition on SDATA, the serial data line, while SCLK, the serial clock line, remains high. This indicates that an address/data stream follows. All slave peripherals connected to the serial bus respond to the start condition and shift in the next eight bits, consisting of a 7-bit address (MSB first) plus an R/$\overline{\text{W}}$ bit, which determines the direction of the data transfer, that is, whether data is written to, or read from, the slave device. The peripheral whose address corresponds to the transmitted address responds by pulling the data line low during the low period before the ninth clock pulse, known as the acknowledge bit. All other devices on the bus remain idle while the selected device waits for data to be read from or written to it. If the R/$\overline{\text{W}}$ bit is a 0, the master writes to the slave device. If the R/$\overline{\text{W}}$ bit is a 1, the master reads from the slave device.
2. Data is sent over the serial bus in a sequence of nine clock pulses, eight bits of data followed by an acknowledge bit from the slave device. Transitions on the data line must occur during the low period of the clock signal and remain stable during the high period, since a low-to-high transition when the clock is high can be interpreted as a stop signal. The number of data bytes that can be transmitted over the serial bus in a single read or

write operation is limited only by what the master and slave devices can handle.

3. When all data bytes have been read or written, stop conditions are established. In write mode, the master pulls the data line high during the tenth clock pulse to assert a stop condition. In read mode, the master device overrides the acknowledge bit by pulling the data line high during the low period before the ninth clock pulse. This is known as no acknowledge. The master takes the data line low during the low period before the tenth clock pulse, then high during the tenth clock pulse to assert a stop condition.
Any number of bytes of data are transferable over the serial bus in one operation, but it is not possible to mix read and write in one operation because the type of operation is determined at the beginning and cannot subsequently be changed without starting a new operation. For the ADT7461A, write operations contain either one or two bytes, while read operations contain one byte.

To write data to one of the device data registers, or to read data from it, the address pointer register must be set so that the correct data register is addressed. The first byte of a write operation always contains a valid address that is stored in the address pointer register. If data is to be written to the device, the write operation contains a second data byte that is written to the register selected by the address pointer register.

This procedure is illustrated in Figure 15. The device address is sent over the bus followed by R/$\overline{W}$ set to 0. This is followed by two data bytes. The first data byte is the address of the internal data register to be written to, which is stored in the address pointer register. The second data byte is the data to be written to the internal data register.

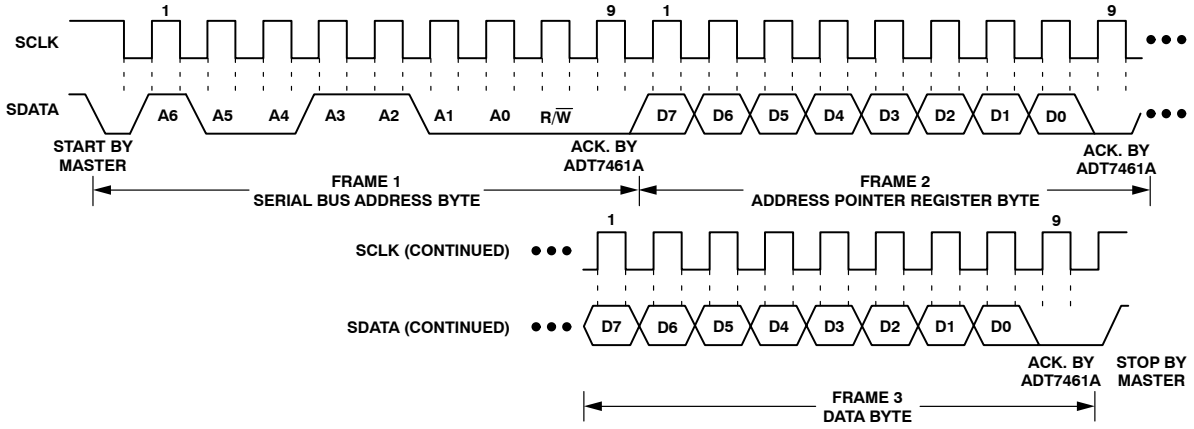

Figure 15. Writing a Register Address to the Address Pointer Register, then Writing Data to the Selected Register

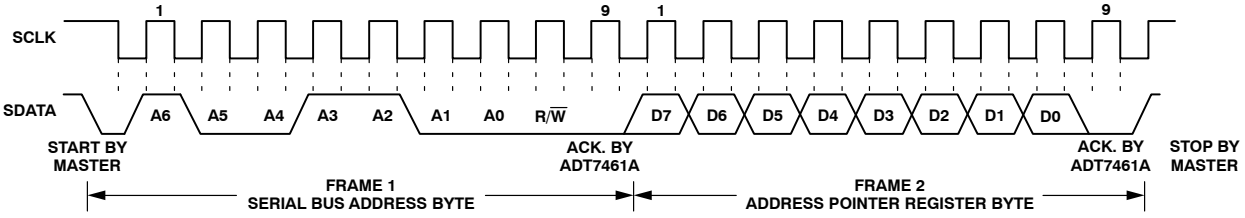

Figure 16. Writing to the Address Pointer Register Only

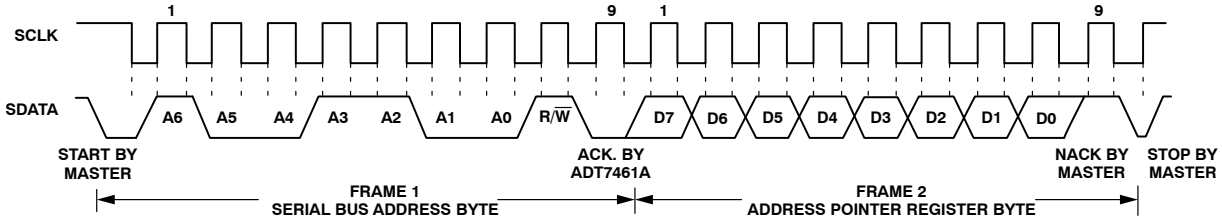

Figure 17. Reading Data from a Previously Selected Register

When reading data from a register there are two possibilities.

1. If the address pointer register value of the ADT7461A is unknown or not the desired value, it is first necessary to set it to the correct value before data can be read from the desired data register. This is done by writing to the ADT7461A as before, but only the data byte containing the register read address is sent, because data is not to be written to the register see Figure 16.
   A read operation is then performed consisting of the serial bus address, R/$\overline{W}$ bit set to 1, followed by the data byte read from the data register see Figure 17.
2. If the address pointer register is known to be at the desired address, data can be read from the corresponding data register without first writing to the address pointer register and the bus transaction shown in Figure 16 can be omitted.

NOTES:

1. It is possible to read a data byte from a data register without first writing to the address pointer register. However, if the address pointer register is already at the correct value, it is not possible to write data to a register without writing to the address pointer register because the first data byte of a write is always written to the address pointer register.
2. Some of the registers have different addresses for read and write operations. The write address of a register must be written to the address pointer if data is to be written to that register, but it may not be possible to read data from that address. The read address of a register must be written to the address pointer before data can be read from that register.

$\overline{\text{ALERT}}$ Output

This is applicable when Pin 6 is configured as an $\overline{\text{ALERT}}$ output. The $\overline{\text{ALERT}}$ output goes low whenever an out-of-limit measurement is detected, or if the remote temperature sensor is open circuit. It is an open-drain output and requires a pullup resistor. Several $\overline{\text{ALERT}}$ outputs can be wire-OR'ed together, so that the common line goes low if one or more of the $\overline{\text{ALERT}}$ outputs goes low.

The $\overline{\text{ALERT}}$ output can be used as an interrupt signal to a processor, or as an $\overline{\text{SMBALERT}}$. Slave devices on the SMBus cannot normally signal to the bus master that they want to talk, but the $\overline{\text{SMBALERT}}$ function allows them to do so.

One or more $\overline{\text{ALERT}}$ outputs can be connected to a common $\overline{\text{SMBALERT}}$ line that is connected to the master. When the $\overline{\text{SMBALERT}}$ line is pulled low by one of the devices, the following procedure occurs (see Figure 18):

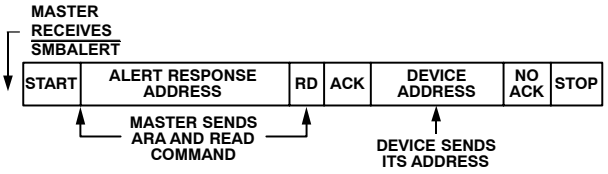

Figure 18. Use of $\overline{\text{SMBALERT}}$

1. $\overline{\text{SMBALERT}}$ is pulled low.
2. Master initiates a read operation and sends the alert response address (ARA = 0001 100). This is a general call address that must not be used as a specific device address.
3. The device whose $\overline{\text{ALERT}}$ output is low responds to the alert response address and the master reads its device address. As the device address is seven bits, an LSB of 1 is added. The address of the device is now known and it can be interrogated in the usual way.
4. If more than one device's $\overline{\text{ALERT}}$ output is low, the one with the lowest device address takes priority, in accordance with normal SMBus arbitration.

Once the ADT7461A has responded to the alert response address, it resets its $\overline{\text{ALERT}}$ output, provided that the error condition that caused the $\overline{\text{ALERT}}$ no longer exists. If the $\overline{\text{SMBALERT}}$ line remains low, the master sends the ARA again, and so on until all devices whose $\overline{\text{ALERT}}$ outputs were low have responded.

Low Power Standby Mode

The ADT7461A can be put into low power standby mode by setting Bit 6 of the configuration register. When Bit 6 is low, the ADT7461A operates normally. When Bit 6 is high, the ADC is inhibited, and any conversion in progress is terminated without writing the result to the corresponding value register. However, the SMBus is still enabled. Power consumption in the standby mode is reduced to 5 μA if there is no SMBus activity, or 30 μA if there are clock and data signals on the bus.

When the device is in standby mode, it is possible to initiate a one-shot conversion of both channels by writing to the one-shot register (Address 0x0F), after which the device returns to standby. It does not matter what is written to the one-shot register, all data written to it is ignored. It is also possible to write new values to the limit register while in standby mode. If the values stored in the temperature value registers are outside the new limits, an $\overline{\text{ALERT}}$ is generated, even though the ADT7461A is still in standby.

Sensor Fault Detection

At its D+ input, the ADT7461A contains internal sensor fault detection circuitry. This circuit can detect situations where an external remote diode is either not connected or incorrectly connected to the ADT7461A. A simple voltage comparator trips if the voltage at D+ exceeds $V_{DD} - 1$ V (typical), signifying an open circuit between D+ and D−. The output of this comparator is checked when a conversion is initiated. Bit 2 of the status register (open flag) is set if a fault is detected. If the $\overline{\text{ALERT}}$ pin is enabled, setting this flag causes $\overline{\text{ALERT}}$ to assert low.

If the user does not wish to use an external sensor with the ADT7461A, tie the D+ and D− inputs together to prevent continuous setting of the open flag.

The ADT7461A Interrupt System

The ADT7461A has two interrupt outputs, $\overline{\text{ALERT}}$ and $\overline{\text{THERM}}$. Both have different functions and behavior. $\overline{\text{ALERT}}$ is maskable and responds to violations of software programmed temperature limits or an open-circuit fault on the external diode. $\overline{\text{THERM}}$ is intended as a fail-safe interrupt output that cannot be masked.

If the external or local temperature exceeds the programmed high temperature limits, or equals or exceeds the low temperature limits, the $\overline{\text{ALERT}}$ output is asserted low. An open-circuit fault on the external diode also causes $\overline{\text{ALERT}}$ to assert. $\overline{\text{ALERT}}$ is reset when serviced by a master reading its device address, provided the error condition has gone away and the status register has been reset.

The $\overline{\text{THERM}}$ output asserts low if the external or local temperature exceeds the programmed $\overline{\text{THERM}}$ limits. $\overline{\text{THERM}}$ temperature limits should normally be equal to or greater than the high temperature limits. $\overline{\text{THERM}}$ is reset automatically when the temperature falls back within the $\overline{\text{THERM}}$ limit. The external and local limits are set by default to 85°C. A hysteresis value can be programmed; in which case, $\overline{\text{THERM}}$ resets when the temperature falls to the limit value minus the hysteresis value. This applies to both local and remote measurement channels. The power-on hysteresis default value is 10°C, but this can be reprogrammed to any value after powerup.

The hysteresis loop on the $\overline{\text{THERM}}$ outputs is useful when $\overline{\text{THERM}}$ is used, for example, as an on/off controller for a fan. The user's system can be set up so that when $\overline{\text{THERM}}$ asserts, a fan is switched on to cool the system. When $\overline{\text{THERM}}$ goes high again, the fan can be switched off. Programming a hysteresis value protects from fan jitter, where the temperature hovers around the $\overline{\text{THERM}}$ limit, and the fan is constantly switched.

Table 15. $\overline{\text{THERM}}$ HYSTERESIS

$\overline{\text{THERM}}$ Hysteresis	Binary Representation
0°C	0 000 0000
1°C	0 000 0001
10°C	0 000 1010

Figure 19 shows how the $\overline{\text{THERM}}$ and $\overline{\text{ALERT}}$ outputs operate. The $\overline{\text{ALERT}}$ output can be used as a $\overline{\text{SMBALERT}}$ to signal to the host via the SMBus that the temperature has risen. The user can use the $\overline{\text{THERM}}$ output to turn on a fan to cool the system, if the temperature continues to increase. This method ensures that there is a fail-safe mechanism to cool the system, without the need for host intervention.

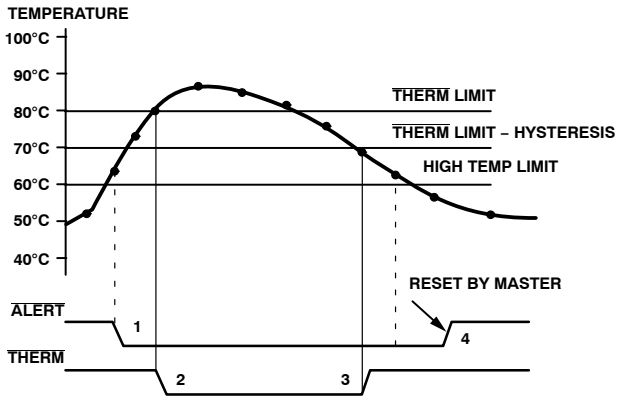

Figure 19. Operation of the $\overline{\text{ALERT}}$ and $\overline{\text{THERM}}$ Interrupts

- If the measured temperature exceeds the high temperature limit, the $\overline{\text{ALERT}}$ output asserts low.
- If the temperature continues to increase and exceeds the $\overline{\text{THERM}}$ limit, the $\overline{\text{THERM}}$ output asserts low. This can be used to throttle the CPU clock or switch on a fan.
- The $\overline{\text{THERM}}$ output deasserts (goes high) when the temperature falls to $\overline{\text{THERM}}$ limit minus hysteresis. In , the default hysteresis value of 10°C is shown.
- The $\overline{\text{ALERT}}$ output deasserts only when the temperature has fallen below the high temperature limit, and the master has read the device address and cleared the status register.
- Pin 6 on the ADT7461A can be configured as either an $\overline{\text{ALERT}}$ output or as an additional $\overline{\text{THERM}}$ output.
- $\overline{\text{THERM2}}$ asserts low when the temperature exceeds the programmed local and/or remote high temperature limits. It is reset in the same manner as $\overline{\text{THERM}}$ and is not maskable.
- The programmed hysteresis value also applies to $\overline{\text{THERM2}}$.

Figure 20 shows how $\overline{\text{THERM}}$ and $\overline{\text{THERM2}}$ operate together to implement two methods of cooling the system. In this example, the $\overline{\text{THERM2}}$ limits are set lower than the $\overline{\text{THERM}}$ limits. The $\overline{\text{THERM2}}$ output is used to turn on a fan. If the temperature continues to rise and exceeds the $\overline{\text{THERM}}$ limits, the $\overline{\text{THERM}}$ output provides additional cooling by throttling the CPU.

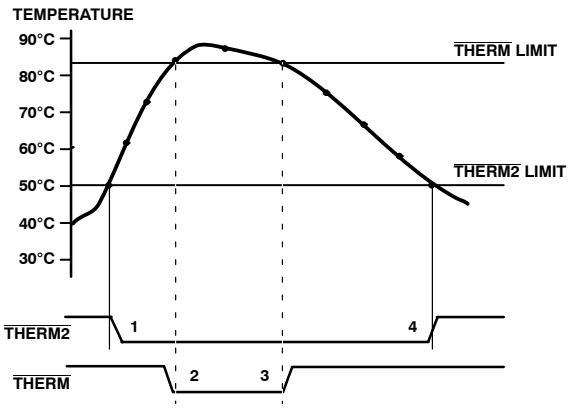

Figure 20. Operation of the THERM and THERM2 Interrupts

- When the THERM2 limit is exceeded, the THERM2 signal asserts low.
- If the temperature continues to increase and exceeds the THERM limit, the THERM output asserts low.
- The THERM output deasserts (goes high) when the temperature falls to THERM limit minus hysteresis. In Figure 20, there is no hysteresis value shown.
- As the system cools further, and the temperature falls below the THERM2 limit, the THERM2 signal resets. Again, no hysteresis value is shown for THERM2.

Both the external and internal temperature measurements cause THERM and THERM2 to operate as described.

Application Information

Noise Filtering

For temperature sensors operating in noisy environments, the industry standard practice was to place a capacitor across the D+ and D− pins to help combat the effects of noise. However, large capacitances affect the accuracy of the temperature measurement, leading to a recommended maximum capacitor value of 1000 pF. Although this capacitor reduces the noise, it does not eliminate it, making it difficult to use the sensor in a very noisy environment.

The ADT7461A has a major advantage over other devices when it comes to eliminating the effects of noise on the external sensor. The series resistance cancellation feature allows a filter to be constructed between the external temperature sensor and the part. The effect of any filter resistance seen in series with the remote sensor is automatically cancelled from the temperature result.

The construction of a filter allows the ADT7461A and the remote temperature sensor to operate in noisy environments. Figure 21 shows a low-pass R−C−R filter, where R = 100 Ω and C = 1 nF. This filtering reduces both common-mode and differential noise.

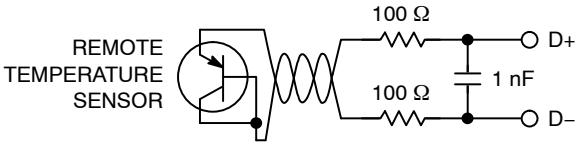

Figure 21. Filter Between Remote Sensor and ADT7461A Factors Affecting Diode Accuracy

Remote Sensing Diode

The ADT7461A is designed to work with substrate transistors built into processors or with discrete transistors. Substrate transistors are generally PNP types with the collector connected to the substrate. Discrete types are either PNP or NPN transistors connected as diodes (base-shorted to collector). If an NPN transistor is used, the collector and base are connected to D+ and the emitter to D−. If a PNP transistor is used, the collector and base are connected to D− and the emitter to D+.

To reduce the error due to variations in both substrate and discrete transistors, consider several factors:

- The ideality factor, nF, of the transistor is a measure of the deviation of the thermal diode from ideal behavior. The ADT7461A is trimmed for an nF value of 1.008. The following equation may be used to calculate the error introduced at a temperature, T (°C), when using a transistor whose nF does not equal 1.008. Consult the processor data sheet for the nF values.

$$\Delta T = (nF - 1.008)/1.008 \times (273.15\ \text{Kelvin} + T) \quad \text{(eq. 1)}$$

  To factor this in, the user writes the ΔT value to the offset register. It is then automatically added to, or subtracted from, the temperature measurement.
- Some CPU manufacturers specify the high and low current levels of the substrate transistors. The high current level of the ADT7461A, I_{HIGH}, is 220 μA and the low level current, I_{LOW}, is 13.5 μA. If the ADT7461A current levels do not match the current levels specified by the CPU manufacturer, it may become necessary to remove an offset. The CPU data sheet should advise whether this offset needs to be removed and how to calculate it. This offset is programmed to the offset register. It is important to note that if more than one offset must be considered, the algebraic sum of these offsets must be programmed to the offset register.

If a discrete transistor is used with the ADT7461A, the best accuracy is obtained by choosing devices according to the following criteria:

- Base-emitter voltage greater than 0.25 V at 6 μA, at the highest operating temperature

- Base-emitter voltage less than 0.95 V at 100 μA, at the lowest operating temperature
- Base resistance less than 100 Ω
- Small variation in h_{FE} (50 to 150) that indicates tight control of V_{BE} characteristics

Transistors, such as the 2N3904, 2N3906, or equivalents in SOT−23 packages are suitable devices to use.

Thermal Inertia and Self-heating

Accuracy depends on the temperature of the remote sensing diode and/or the internal temperature sensor being at the same temperature as that being measured. Many factors can affect this. Ideally, place the sensor in good thermal contact with the part of the system being measured. If it is not, the thermal inertia caused by the sensor's mass causes a lag in the response of the sensor to a temperature change. In the case of the remote sensor, this should not be a problem since it is either a substrate transistor in the processor or a small package device, such as the SOT−23, placed in close proximity to it.

The on-chip sensor, however, is often remote from the processor and only monitors the general ambient temperature around the package. How accurately the temperature of the board and/or the forced airflow reflects the temperature to be measured dictates the accuracy of the measurement. Self-heating due to the power dissipated in the ADT7461A or the remote sensor causes the chip temperature of the device or remote sensor to rise above ambient. However, the current forced through the remote sensor is so small that self-heating is negligible. In the case of the ADT7461A, the worst-case condition occurs when the device is converting at 64 conversions per second while sinking the maximum current of 1 mA at the $\overline{\text{ALERT}}$ and $\overline{\text{THERM}}$ output. In this case, the total power dissipation in the device is about 4.5 mW. The thermal resistance, θ_{JA}, of the 8-lead MSOP is approximately 142°C/W.

Layout Considerations

Digital boards can be electrically noisy environments, and the ADT7461A is measuring very small voltages from the remote sensor, so care must be taken to minimize noise induced at the sensor inputs. Take the following precautions:

- Place the ADT7461A as close as possible to the remote sensing diode. Provided that the worst noise sources, that is, clock generators, data/address buses, and CRTs are avoided, this distance can be 4 inches to 8 inches.
- Route the D+ and D− tracks close together, in parallel, with grounded guard tracks on each side. To minimize inductance and reduce noise pickup, a 5 mil track width and spacing is recommended. Provide a ground plane under the tracks, if possible.

Figure 22. Typical Arrangement of Signal Tracks

- Try to minimize the number of copper/solder joints that can cause thermocouple effects. Where copper/solder joints are used, make sure that they are in both the D+ and D− path and at the same temperature.
- Thermocouple effects should not be a major problem as 1°C corresponds to about 200 mV, and thermocouple voltages are about 3 mV/°C of temperature difference. Unless there are two thermocouples with a big temperature differential between them, thermocouple voltages should be much less than 200 mV.
- Place a 0.1 μF bypass capacitor close to the V_{DD} pin. In extremely noisy environments, place an input filter capacitor across D+ and D− close to the ADT7461A. This capacitance can effect the temperature measurement, so ensure that any capacitance seen at D+ and D− is, at maximum, 1000 pF. This maximum value includes the filter capacitance, plus any cable or stray capacitance between the pins and the sensor diode.
- If the distance to the remote sensor is more than 8 inches, the use of twisted pair cable is recommended. A total of 6 feet to 12 feet is needed.
  For really long distances (up to 100 feet), use a shielded twisted pair, such as the Belden No. 8451 microphone cable. Connect the twisted pair to D+ and D− and the shield to GND close to the ADT7461A. Leave the remote end of the shield unconnected to avoid ground loops.

Because the measurement technique uses switched current sources, excessive cable or filter capacitance can affect the measurement. When using long cables, the filter capacitance can be reduced or removed.

Application Circuit

Figure 23 shows a typical application circuit for the ADT7461A, using a discrete sensor transistor connected via a shielded, twisted pair cable. The pullups on SCLK, SDATA, and $\overline{\text{ALERT}}$ are required only if they are not provided elsewhere in the system.

The SCLK pin and the SDATA pin of the ADT7461A can be interfaced directly to the SMBus of an I/O controller, such as the Intel® 820 chipset.

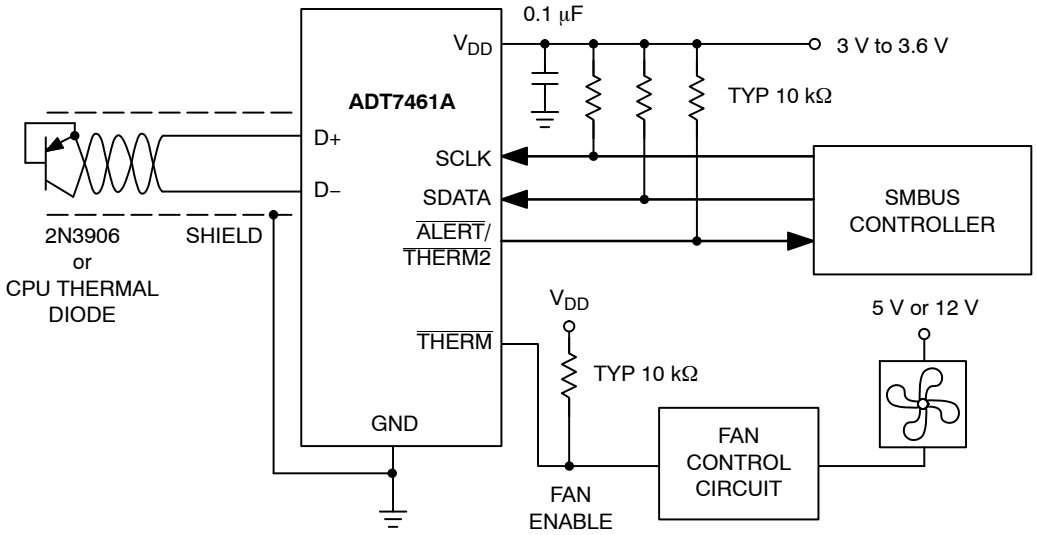

Figure 23. Typical Application Circuit

Table 16. ORDERING INFORMATION

Device Order Number*	Package Description	Branding	SMBus Address	Shipping†
ADT7461AARMZ−R	8-lead MSOP	T1K	4C	3,000 Tape & Reel
ADT7461AARMZ−2RL	8-lead MSOP	T1L	4D	3,000 Tape & Reel

†For information on tape and reel specifications, including part orientation and tape sizes, please refer to our Tape and Reel Packaging Specifications Brochure, BRD8011/D.
*The “Z” suffix indicates Pb-Free package available.

PACKAGE DIMENSIONS

MSOP8
CASE 846AB−01
ISSUE O

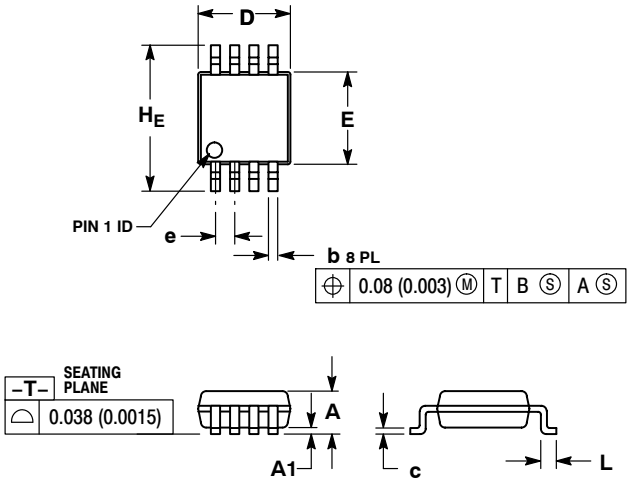

NOTES:
1. DIMENSIONING AND TOLERANCING PER ANSI Y14.5M, 1982.
2. CONTROLLING DIMENSION: MILLIMETER.
3. DIMENSION A DOES NOT INCLUDE MOLD FLASH, PROTRUSIONS OR GATE BURRS. MOLD FLASH, PROTRUSIONS OR GATE BURRS SHALL NOT EXCEED 0.15 (0.006) PER SIDE.
4. DIMENSION B DOES NOT INCLUDE INTERLEAD FLASH OR PROTRUSION. INTERLEAD FLASH OR PROTRUSION SHALL NOT EXCEED 0.25 (0.010) PER SIDE.
5. 846A−01 OBSOLETE, NEW STANDARD 846A−02.

	MILLIMETERS			INCHES		
DIM	MIN	NOM	MAX	MIN	NOM	MAX
A	−−	−−	1.10	−−	−−	0.043
A1	0.05	0.08	0.15	0.002	0.003	0.006
b	0.25	0.33	0.40	0.010	0.013	0.016
c	0.13	0.18	0.23	0.005	0.007	0.009
D	2.90	3.00	3.10	0.114	0.118	0.122
E	2.90	3.00	3.10	0.114	0.118	0.122
e	0.65 BSC			0.026 BSC		
L	0.40	0.55	0.70	0.016	0.021	0.028
H_E	4.75	4.90	5.05	0.187	0.193	0.199

SOLDERING FOOTPRINT*

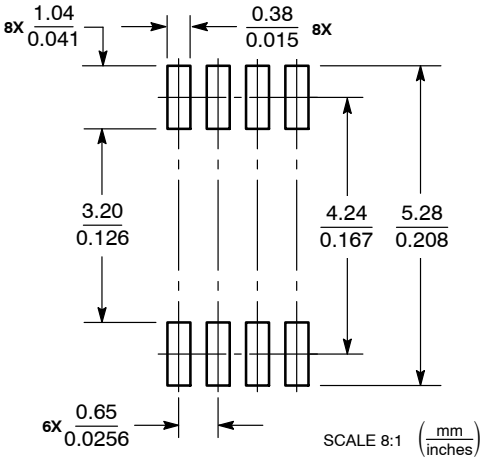

*For additional information on our Pb−Free strategy and soldering details, please download the ON Semiconductor Soldering and Mounting Techniques Reference Manual, SOLDERRM/D.

Protected by U.S. Patents 5,195,827; 5,867,012; 5,982,221; 6,097,239; 6,133,753; 6,169,442; 7,010,440; other patents pending.

ON Semiconductor and are registered trademarks of Semiconductor Components Industries, LLC (SCILLC). SCILLC reserves the right to make changes without further notice to any products herein. SCILLC makes no warranty, representation or guarantee regarding the suitability of its products for any particular purpose, nor does SCILLC assume any liability arising out of the application or use of any product or circuit, and specifically disclaims any and all liability, including without limitation special, consequential or incidental damages. “Typical” parameters which may be provided in SCILLC data sheets and/or specifications can and do vary in different applications and actual performance may vary over time. All operating parameters, including “Typicals” must be validated for each customer application by customer’s technical experts. SCILLC does not convey any license under its patent rights nor the rights of others. SCILLC products are not designed, intended, or authorized for use as components in systems intended for surgical implant into the body, or other applications intended to support or sustain life, or for any other application in which the failure of the SCILLC product could create a situation where personal injury or death may occur. Should Buyer purchase or use SCILLC products for any such unintended or unauthorized application, Buyer shall indemnify and hold SCILLC and its officers, employees, subsidiaries, affiliates, and distributors harmless against all claims, costs, damages, and expenses, and reasonable attorney fees arising out of, directly or indirectly, any claim of personal injury or death associated with such unintended or unauthorized use, even if such claim alleges that SCILLC was negligent regarding the design or manufacture of the part. SCILLC is an Equal Opportunity/Affirmative Action Employer. This literature is subject to all applicable copyright laws and is not for resale in any manner.

PUBLICATION ORDERING INFORMATION

LITERATURE FULFILLMENT:
Literature Distribution Center for ON Semiconductor
P.O. Box 5163, Denver, Colorado 80217 USA
Phone: 303−675−2175 or 800−344−3860 Toll Free USA/Canada
Fax: 303−675−2176 or 800−344−3867 Toll Free USA/Canada
Email: orderlit@onsemi.com

N. American Technical Support: 800−282−9855 Toll Free USA/Canada
Europe, Middle East and Africa Technical Support:
Phone: 421 33 790 2910
Japan Customer Focus Center
Phone: 81−3−5817−1050

ON Semiconductor Website: **www.onsemi.com**

Order Literature: http://www.onsemi.com/orderlit

For additional information, please contact your local Sales Representative

Looking for pricing, stock, or lifecycle information?

Click below to explore more details on WIN SOURCE:

- View ADT7461AARMZ-R on WIN SOURCE
- ON Semiconductor Information

Optimize Your Supply Chain with WIN SOURCE Solutions

- Global Sourcing Solution
- Obsolete Management
- Cost Control Management
- Shortage Management
- Alternative Solution
- Excess Inventory Management