# THE DATASHEET OF

# AH1822-FU4G-7

www.win-source.net 0086-755-83957316

## Description

AH1822 is comprised of two Hall effect plates and an open-drain output driver, mainly designed for battery-operation, hand-held equipment (such as Cellular and Cordless Phone, PDA). The total power consumption in normal operation is typically 24µW with a 3V power source.

Either north or south pole of sufficient strength will turn the output on. The output will be turned off under no magnetic field. While the magnetic flux density **(B)** is larger than operating point **(Bop)**, the output will be turned on (low), the output is held until **B** is lower than release point **(Brp),** then turned off.

## Pin Assignments

**( Top View )**

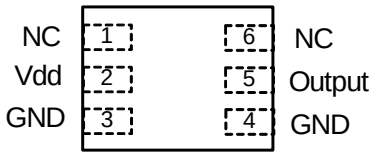


**X2-DFN2015-6**

## Features

- Micropower Operation
- Operation with Magnetic Field of Either North or South Pole (Omnipolar)
- 2.5V to 5.5V Battery Operation
- Chopper Stabilized
  - Superior Temperature Stability
  - Extremely Low Switch-Point Drift
  - Insensitive to Physical Stress
- Good RF Noise Immunity
- -40°C to +85°C Operating Temperature
- ESD (HBM) ＞ 5kV
- **Totally Lead-Free & Fully RoHS Compliant (Notes 1 & 2)**
- **Halogen and Antimony Free. "Green" Device (Note 3)**

Note: 4. NC is "No Connection" which is recommended to be tied to ground.

## Applications

- Cover Switch in Clam-Shell Cellular Phones
- Cover Switch in Notebook PC/PDA
- Contact-Less Switch in Consumer Products

Notes: 1. No purposely added lead. Fully EU Directive 2002/95/EC (RoHS), 2011/65/EU (RoHS 2) & 2015/863/EU (RoHS 3) compliant.
2. See https://www.diodes.com/quality/lead-free/ for more information about Diodes Incorporated's definitions of Halogen- and Antimony-free, "Green" and Lead-free.
3. Halogen- and Antimony-free "Green" products are defined as those which contain <900ppm bromine, <900ppm chlorine (<1500ppm total Br + Cl) and <1000ppm antimony compounds.

## Typical Applications Circuit

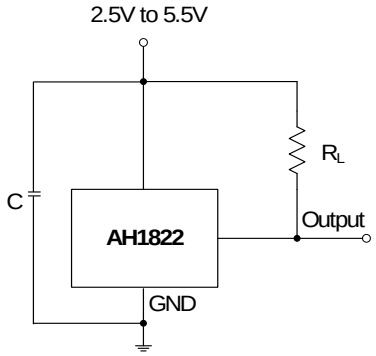


Note: 5. C is for power stabilization and to strengthen the noise immunity, the recommended capacitance is 10nF to 100nF.
$R_L$ is the pull-up resistor, the recommended resistance is 10kΩ to 100kΩ.


© Diodes Incorporated

## Pin Descriptions

| Pin Name | P/I/O | Description |
|---|---|---|
| Vdd | P/I | Power Supply Input |
| GND | P/I | Ground |
| Output | O | Output Pin |
| NC | NC | No Connected |

## Functional Block Diagram

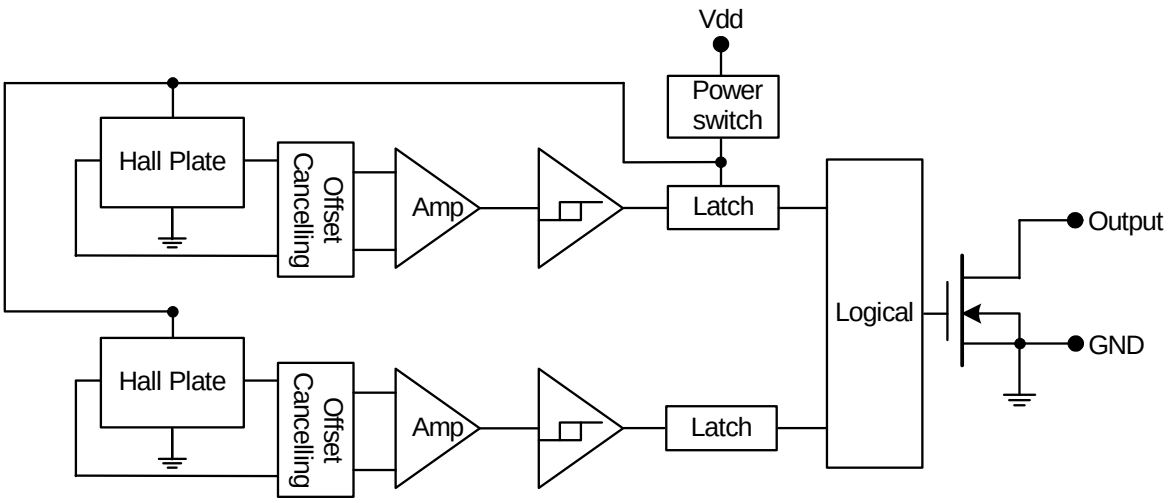


## Absolute Maximum Ratings (@$T_A$ = +25°C, unless otherwise specified.)

| Symbol | Parameter | Rating | Unit |
|---|---|---|---|
| $V_{dd}$ | Supply Voltage | 7 | V |
| B | Magnetic Flux Density | Unlimited | |
| $T_{STG}$ | Storage Temperature Range | -65 to +150 | °C |
| $P_D$ | Package Power Dissipation | 230 | mW |
| $T_J$ | Maximum Junction Temperature | +150 | °C |

## Recommended Operating Conditions

| Symbol | Parameter | Conditions | Rating | Unit |
|---|---|---|---|---|
| $V_{dd}$ | Supply Voltage | Operating | 2.5 to 5.5 | V |
| $T_A$ | Operating Temperature Range | Operating | -40 to +85 | °C |


© Diodes Incorporated

## Electrical Characteristics (@$T_A$ = +25°C, $V_{dd}$ = 3V, unless otherwise specified.)

| Symbol | Parameter | Conditions | Min | Typ | Max | Unit |
|---|---|---|---|---|---|---|
| $V_{OUT}$ | Output On Voltage | $I_{OUT}$=1mA | — | 0.1 | 0.3 | V |
| $I_{OFF}$ | Output Leakage Current | $V_{OUT}$=5.5V, Output off | — | <0.1 | 1 | µA |
| $I_{dd(EN)}$ | Supply Current | Chip enable, $T_A$ = +25°C, $V_{dd}$ = 3V | — | 3 | 6 | mA |
| $I_{dd(EN)}$ | | Chip enable, $T_A$=-40 to +85°C, $V_{dd}$ = 2.5V to 5.5V | — | 3 | 10 | mA |
| $I_{dd(DIS)}$ | | Chip disable, $T_A$= +25°C, $V_{dd}$ = 3V | — | 5 | 10 | µA |
| $I_{dd(DIS)}$ | | Chip disable, $T_A$= -40 to +85°C, $V_{dd}$ = 2.5V to 5.5V | — | 5 | 18 | µA |
| $I_{dd(AVG)}$ | | Average supply current, $T_A$= +25°C, $V_{dd}$ = 3V | — | 8 | 16 | µA |
| $I_{dd(AVG)}$ | | Average supply current, $T_A$= -40 to +85°C, $V_{dd}$ = 2.5V to 5.5V | — | 8 | 28 | µA |
| $f_C$ | Chopping Frequency | For design information only | — | 300 | — | kHz |
| $t_{AWAKE}$ | Awake Time | (Note 6) | — | 75 | 150 | µs |
| $t_{PERIOD}$ | Period | (Note 6) | — | 75 | 150 | ms |
| D.C. | Duty Cycle | — | — | 0.1 | — | % |

Notes: 6. When power is initially on, the operating $V_{dd}$ (2.5V to 5.5V) must be applied to be guaranteed for the output sampling. The output state is valid after the second operating phase (typical 150ms).

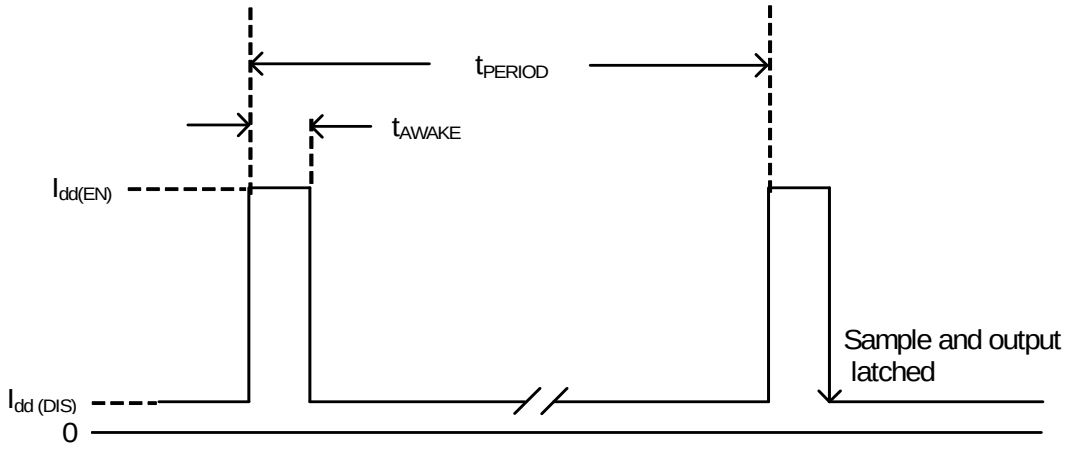



© Diodes Incorporated

## Magnetic Characteristics (@$T_A$ = +25°C, $V_{dd}$ = 3V, unless otherwise specified. Notes 7 and 8)

(1mT=10 Gauss)

| Symbol | Characteristic | Min | Typ | Max | Unit |
|---|---|---|---|---|---|
| Bops(South Pole to Brand Side) | Operate Point | — | 28 | 55 | Gauss |
| Bopn(North Pole to Brand Side) | | -55 | -28 | — | |
| Brps(South Pole to Brand Side) | Release Point | 10 | 20 | — | |
| Brpn(North Pole to Brand Side) | | — | -20 | -10 | |
| Bhy ( $\lvert Bopx - Brpx \rvert$ ) | Hysteresis | 5 | 8 | — | |

Notes: 7. Typical data is at $T_A$= +25°C, $V_{dd}$ = 3V, and for design information only.
8. Operating point and release point will vary with supply voltage and operating temperature.

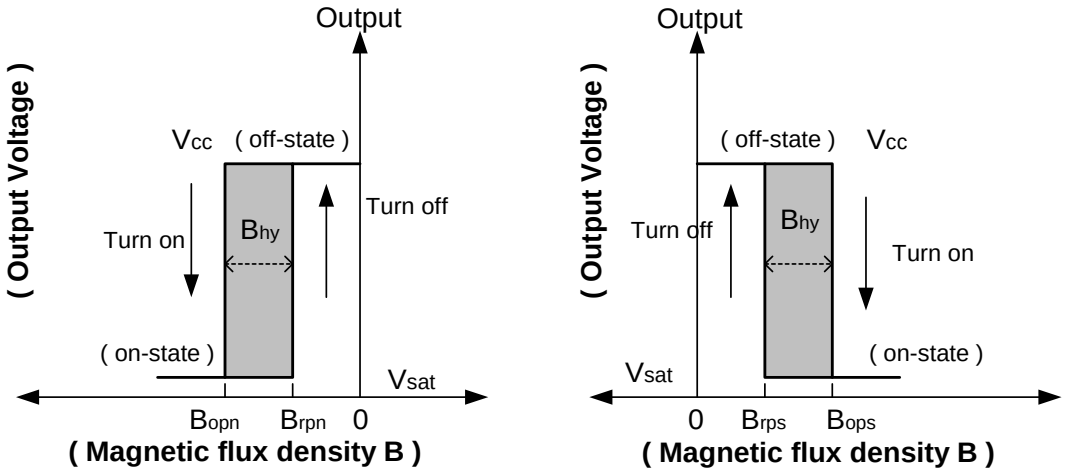


## Performance Characteristics

| $T_A$ (°C) | 25 | 50 | 60 | 70 | 80 | 85 | 90 | 100 | 110 | 120 | 130 | 140 | 150 |
|---|---|---|---|---|---|---|---|---|---|---|---|---|---|
| $P_D$ (mW) | 230 | 184 | 166 | 147 | 129 | 120 | 110 | 92 | 74 | 55 | 37 | 18 | 0 |

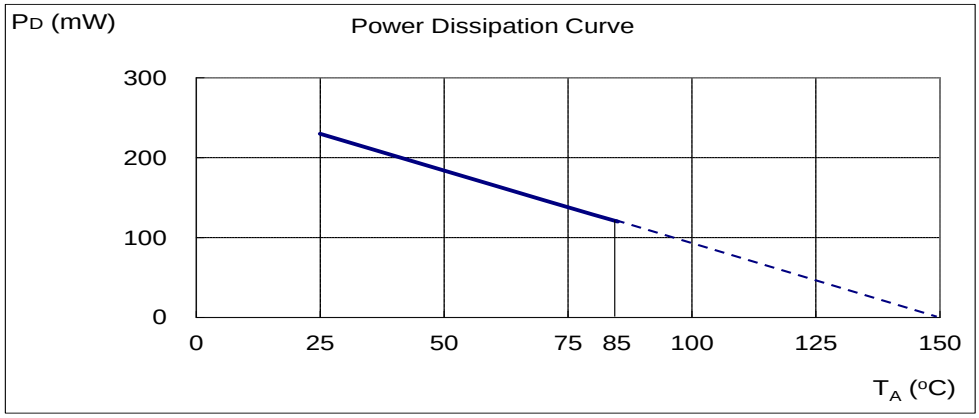



© Diodes Incorporated

## Ordering Information

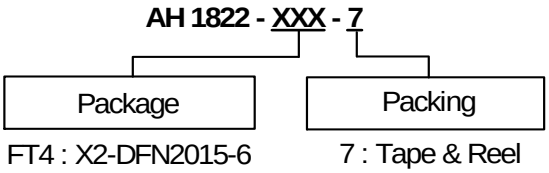


| Device | Package Code | Packaging | 7" Tape and Reel | |
|---|---|---|---|---|
| | | | Quantity | Part Number Suffix |
| AH1822-FT4-7 | FT4 | X2-DFN2015-6 | 3000/Tape & Reel | -7 |

Note: 9. For packaging details, go to our website at https://www.diodes.com/design/support/packaging/diodes-packaging/.

## Marking Information

**(1) X2-DFN2015-6**

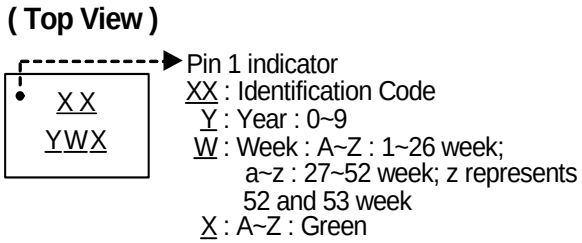


| Part Number | Package | Identification Code |
|---|---|---|
| AH1822 | X2-DFN2015-6 | K7 |


© Diodes Incorporated

## Package Outline Dimensions (All dimensions in mm.)

Please see http://www.diodes.com/package-outlines.html for the latest version.

**(1) Package Type: X2-DFN2015-6**

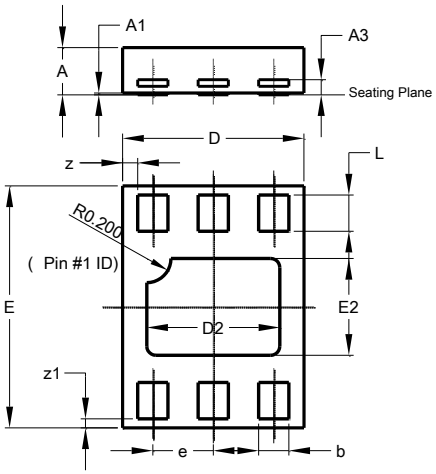


| X2-DFN2015-6 | | | |
|---|---|---|---|
| **Dim** | **Min** | **Max** | **Typ** |
| **A** | 0.375 | 0.40 | 0.390 |
| **A1** | 0 | 0.05 | 0.02 |
| **A3** | - | - | 0.13 |
| **b** | 0.20 | 0.30 | 0.25 |
| **D** | 1.45 | 1.575 | 1.50 |
| **D2** | 1.00 | 1.20 | 1.10 |
| **e** | - | - | 0.50 |
| **E** | 1.95 | 2.075 | 2.00 |
| **E2** | 0.70 | 0.90 | 0.80 |
| **L** | 0.25 | 0.35 | 0.30 |
| **Z** | - | - | 0.125 |
| **Z1** | - | - | 0.075 |
| **All Dimensions in mm** | | | |

## Suggested Pad Layout

Please see http://www.diodes.com/package-outlines.html for the latest version.

**(1) Package type: X2-DFN2015-6**

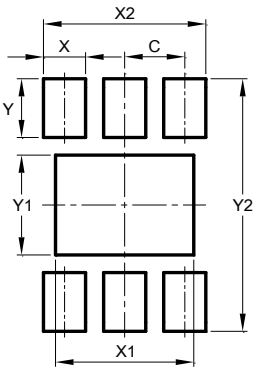


| X2-DFN2015-6 | |
|---|---|
| **Dimensions** | **Value (in mm)** |
| **C** | 0.500 |
| **X** | 0.350 |
| **X1** | 1.150 |
| **X2** | 1.350 |
| **Y** | 0.500 |
| **Y1** | 0.850 |
| **Y2** | 2.150 |


© Diodes Incorporated

## Taping Orientation

**(1) X2-DFN2015-6**

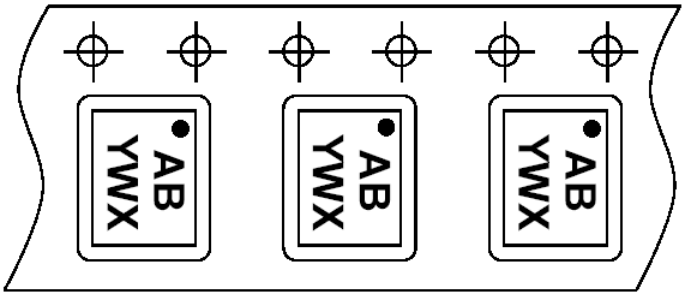


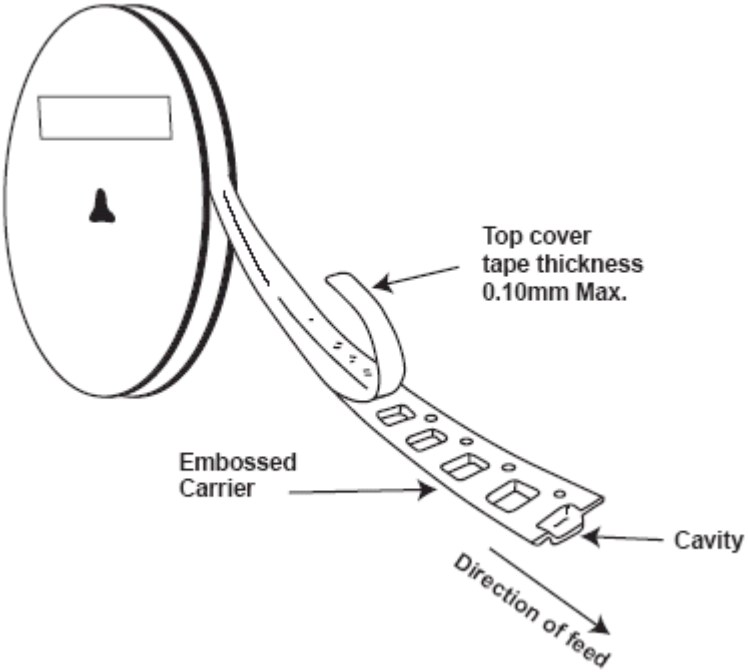


Notes: 10. The taping orientation of the other package type can be found on our website at http://www.diodes.com/datasheets/ap02007.pdf.


© Diodes Incorporated

**IMPORTANT NOTICE**

DIODES INCORPORATED MAKES NO WARRANTY OF ANY KIND, EXPRESS OR IMPLIED, WITH REGARDS TO THIS DOCUMENT, INCLUDING, BUT NOT LIMITED TO, THE IMPLIED WARRANTIES OF MERCHANTABILITY AND FITNESS FOR A PARTICULAR PURPOSE (AND THEIR EQUIVALENTS UNDER THE LAWS OF ANY JURISDICTION).

Diodes Incorporated and its subsidiaries reserve the right to make modifications, enhancements, improvements, corrections or other changes without further notice to this document and any product described herein. Diodes Incorporated does not assume any liability arising out of the application or use of this document or any product described herein; neither does Diodes Incorporated convey any license under its patent or trademark rights, nor the rights of others. Any Customer or user of this document or products described herein in such applications shall assume all risks of such use and will agree to hold Diodes Incorporated and all the companies whose products are represented on Diodes Incorporated website, harmless against all damages.

Diodes Incorporated does not warrant or accept any liability whatsoever in respect of any products purchased through unauthorized sales channel. Should Customers purchase or use Diodes Incorporated products for any unintended or unauthorized application, Customers shall indemnify and hold Diodes Incorporated and its representatives harmless against all claims, damages, expenses, and attorney fees arising out of, directly or indirectly, any claim of personal injury or death associated with such unintended or unauthorized application.

Products described herein may be covered by one or more United States, international or foreign patents pending. Product names and markings noted herein may also be covered by one or more United States, international or foreign trademarks.

This document is written in English but may be translated into multiple languages for reference. Only the English version of this document is the final and determinative format released by Diodes Incorporated.

**LIFE SUPPORT**

Diodes Incorporated products are specifically not authorized for use as critical components in life support devices or systems without the express written approval of the Chief Executive Officer of Diodes Incorporated. As used herein:

A. Life support devices or systems are devices or systems which:

1. are intended to implant into the body, or
2. support or sustain life and whose failure to perform when properly used in accordance with instructions for use provided in the labeling can be reasonably expected to result in significant injury to the user.

B. A critical component is any component in a life support device or system whose failure to perform can be reasonably expected to cause the failure of the life support device or to affect its safety or effectiveness.

Customers represent that they have all necessary expertise in the safety and regulatory ramifications of their life support devices or systems, and acknowledge and agree that they are solely responsible for all legal, regulatory and safety-related requirements concerning their products and any use of Diodes Incorporated products in such safety-critical, life support devices or systems, notwithstanding any devices- or systems-related information or support that may be provided by Diodes Incorporated. Further, Customers must fully indemnify Diodes Incorporated and its representatives against any damages arising out of the use of Diodes Incorporated products in such safety-critical, life support devices or systems.

Copyright © 2018, Diodes Incorporated

**www.diodes.com**

## Looking for pricing, stock, or lifecycle information?

Click below to explore more details on WIN SOURCE:

- View AH1822-FU4G-7 on WIN SOURCE
- Diodes Incorporated Information

## Optimize Your Supply Chain with WIN SOURCE Solutions

- Global Sourcing Solution
- Obsolete Management
- Cost Control Management
- Shortage Management
- Alternative Solution
- Excess Inventory Management