THE DATASHEET OF

SN74LV86ADR

www.win-source.net 0086-755-83957316

SNx4LV86A Quadruple 2-Input Exclusive-OR Gates

1 Features

- 2-V to 5.5-V V_{CC} Operation
- Max t_{pd} of 8 ns at 5 V
- Typical V_{OLP} (Output Ground Bounce) <0.8 V at V_{CC} = 3.3 V, T_A = 25°C
- Typical V_{OHV} (Output V_{OH} Undershoot) >2.3 V at V_{CC} = 3.3 V, T_A = 25°C
- Support Mixed-Mode Voltage Operation on All Ports
- Latch-Up Performance Exceeds 250 mA per JESD 17
- ESD Protection Exceeds JESD 22
  - 2000-V Human-Body Model (A114-A)
  - 200-V Machine Model (A115-A)
  - 1000-V Charged-Device Model (C101)

2 Applications

- EPOS
- Programmable Logic Controller (PLC)
- DCS and PAC: Analog Input Module
- Medical Meters: Portable
- Server Motherboard
- Printer

3 Description

The ’LV86A devices are quadruple 2-input exclusive-OR gates designed for 2-V to 5.5-V V_{CC} operation.

These devices contain four independent 2-input exclusive-OR gates. They perform the Boolean function $Y = A \oplus B$ or $Y = \overline{A}B + A\overline{B}$ in positive logic.

A common application is as a true/complement element. If one of the inputs is low, the other input is reproduced in true form at the output. If one of the inputs is high, the signal on the other input is reproduced inverted at the output.

Device Information(1)

PART NUMBER	PACKAGE	BODY SIZE (NOM)
LV86A	VQFN (14)	3.50 mm × 3.50 mm
	SOIC (14)	8.65 mm × 3.91 mm
	SOP (14)	10.30 mm × 5.30 mm
	SSOP (14)	6.20 mm × 5.30 mm
	TSSOP (14)	5.00 mm × 4.40 mm

(1) For all available packages, see the orderable addendum at the end of the data sheet.

4 Simplified Schematic

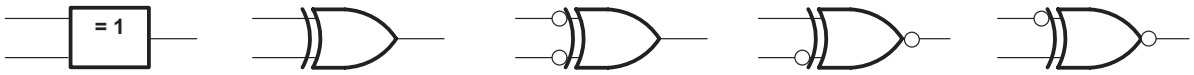

A. These are five equivalent exclusive-OR symbols valid for an ’LV86A gate in positive logic; negation can be shown at any two ports. See *Functional Block Diagram* for more information.

An IMPORTANT NOTICE at the end of this data sheet addresses availability, warranty, changes, use in safety-critical applications, intellectual property matters and other important disclaimers. PRODUCTION DATA.

Table of Contents

1 Features ... 1
2 Applications ... 1
3 Description ... 1
4 Simplified Schematic ... 1
5 Revision History ... 2
6 Pin Configuration and Functions ... 3
7 Specifications ... 4
7.1 Absolute Maximum Ratings ... 4
7.2 ESD Ratings ... 4
7.3 Recommended Operating Conditions ... 5
7.4 Thermal Information ... 5
7.5 Electrical Characteristics ... 6
7.6 Switching Characteristics, V_{CC} = 2.5 V ±0.2 V ... 6
7.7 Switching Characteristics, V_{CC} = 3.3 V ±0.3 V ... 6
7.8 Switching Characteristics, V_{CC} = 5 V ±0.5 V ... 6
7.9 Noise Characteristics for SN74LV86A ... 7
7.10 Operating Characteristics ... 7
7.11 Typical Characteristics ... 7
8 Parameter Measurement Information ... 8
9 Detailed Description ... 9
9.1 Overview ... 9
9.2 Functional Block Diagram ... 9
9.3 Feature Description ... 9
9.4 Device Functional Modes ... 9
10 Application and Implementation ... 10
10.1 Application Information ... 10
10.2 Typical Application ... 10
11 Power Supply Recommendations ... 11
12 Layout ... 11
12.1 Layout Guidelines ... 11
12.2 Layout Example ... 11
13 Device and Documentation Support ... 12
13.1 Related Links ... 12
13.2 Trademarks ... 12
13.3 Electrostatic Discharge Caution ... 12
13.4 Glossary ... 12
14 Mechanical, Packaging, and Orderable Information ... 12

5 Revision History

Changes from Revision F (April 2005) to Revision G	Page
• Added *ESD Ratings* table, *Feature Description* section, *Device Functional Modes*, *Application and Implementation* section, *Power Supply Recommendations* section, *Layout* section, *Device and Documentation Support* section, and *Mechanical, Packaging, and Orderable Information* section	1
• Updated operating free-air temperature maximum from 85°C to 125°C for SN74LV86A	5

Copyright © 1998–2015, Texas Instruments Incorporated

6 Pin Configuration and Functions

SN54LV86A: J or W Package
SN74LV86A: D, DB, DGV, NS, or PW Package
(Top View)

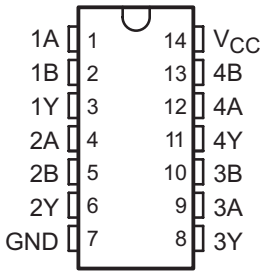

SN54LV86A: FK Package
(Top View)

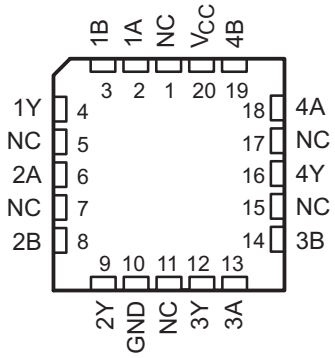

B. NC − No internal connection

Pin Functions

PIN	I/O	DESCRIPTION
1	1A	A input 1
2	1B	B input 1
3	1Y	Output 1
4	2A	A input 2
5	2B	B input 2
6	2Y	Output 2
7	GND	ground
8	3Y	Output 3
9	3A	A input 3
10	3B	B input 3
11	4Y	Output 4
12	4A	A input 4
13	4B	B input 4
14	V_{CC}	Power pin

Copyright © 1998–2015, Texas Instruments Incorporated

7 Specifications

7.1 Absolute Maximum Ratings

over operating free-air temperature range (unless otherwise noted) (1)

		MIN	MAX	UNIT
V_{CC}	Supply voltage	–0.5	7	V
V_I	Input voltage (2)	–0.5	7	V
V_O	Voltage applied to any output in the high-impedance or power-off state (2)	–0.5	7	V
V_O	Output voltage (2) (3)	–0.5	V_{CC} + 0.5 V	V
I_{IK}	Input clamp current, $V_I < 0$		–20	mA
I_{OK}	Output clamp current, $V_O < 0$		–50	mA
I_O	Continuous output current, $V_O = 0$ to V_{CC}	–25	25	mA
	Continuous current through V_{CC} or GND	–50	50	mA
T_{stg}	Storage temperature	–65	150	°C

(1) Stresses beyond those listed under *Absolute Maximum Ratings* may cause permanent damage to the device. These are stress ratings only, which do not imply functional operation of the device at these or any other conditions beyond those indicated under *Recommended Operating Conditions*. Exposure to absolute-maximum-rated conditions for extended periods may affect device reliability.
(2) The input and output negative-voltage ratings may be exceeded if the input and output current ratings are observed.
(3) This value is limited to 5.5-V maximum.

7.2 ESD Ratings

			VALUE	UNIT
$V_{(ESD)}$	Electrostatic discharge	Human-body model (HBM), per ANSI/ESDA/JEDEC JS-001 (1)	2000	V
		Charged-device model (CDM), per JEDEC specification JESD22-C101 (2)	1000	

(1) JEDEC document JEP155 states that 500-V HBM allows safe manufacturing with a standard ESD control process.
(2) JEDEC document JEP157 states that 250-V CDM allows safe manufacturing with a standard ESD control process.

Copyright © 1998–2015, Texas Instruments Incorporated

7.3 Recommended Operating Conditions

see (1)

			MIN	MAX	UNIT
V_{CC}	Supply voltage		2	5.5	V
V_{IH}	High-level input voltage	V_{CC} = 2 V	1.5		V
		V_{CC} = 2.3 V to 2.7 V	V_{CC} × 0.7		
		V_{CC} = 3 V to 3.6 V	V_{CC} × 0.7		
		V_{CC} = 4.5 V to 5.5 V	V_{CC} × 0.7		
V_{IL}	Low-level input voltage	V_{CC} = 2 V		0.5	V
		V_{CC} = 2.3 V to 2.7 V		V_{CC} × 0.3	
		V_{CC} = 3 V to 3.6 V		V_{CC} × 0.3	
		V_{CC} = 4.5 V to 5.5 V		V_{CC} × 0.3	
V_I	Input voltage		0	5.5	V
V_O	Output voltage		0	V_{CC}	V
I_{OH}	High-level output current	V_{CC} = 2 V		–50	µA
		V_{CC} = 2.3 V to 2.7 V		–2	mA
		V_{CC} = 3 V to 3.6 V		–6	
		V_{CC} = 4.5 V to 5.5 V		–12	
I_{OL}	Low-level output current	V_{CC} = 2 V		50	µA
		V_{CC} = 2.3 V to 2.7 V		2	mA
		V_{CC} = 3 V to 3.6 V		6	
		V_{CC} = 4.5 V to 5.5 V		12	
Δt/Δv	Input transition rise or fall rate	V_{CC} = 2.3 V to 2.7 V		200	ns/V
		V_{CC} = 3 V to 3.6 V		100	
		V_{CC} = 4.5 V to 5.5 V		20	
T_A	Operating free-air temperature		–55	125	°C

(1) All unused inputs of the device must be held at V_{CC} or GND to ensure proper device operation. Refer to the TI application report, *Implications of Slow or Floating CMOS Inputs*, SCBA004.

7.4 Thermal Information

THERMAL METRIC (1)		D	DB	DGV	NS	PW	UNIT
		14 PINS					
$R_{\theta JA}$	Junction-to-ambient thermal resistance (2)	90.6	107.1	129.0	90.7	122.6	°C/W
$R_{\theta JC(top)}$	Junction-to-case (top) thermal resistance	50.9	59.6	52.1	48.3	51.4	
$R_{\theta JB}$	Junction-to-board thermal resistance	44.8	54.4	62.0	49.4	64.4	
ψ_{JT}	Junction-to-top characterization parameter	14.7	20.5	6.5	14.6	6.7	
ψ_{JB}	Junction-to-board characterization parameter	44.5	53.8	61.3	49.1	63.8	

(1) For more information about traditional and new thermal metrics, see the *IC Package Thermal Metrics* application report, SPRA953.
(2) The package thermal impedance is calculated in accordance with JESD 51-7.

Copyright © 1998–2015, Texas Instruments Incorporated

7.5 Electrical Characteristics

over recommended operating free-air temperature range (unless otherwise noted)

PARAMETER	TEST CONDITIONS	V_{CC}	SN54LV86A			SN74LV86A –40°C to 125°C			UNIT
			MIN	TYP	MAX	MIN	TYP	MAX	
V_{OH}	I_{OH} = –50 µA	2 to 5.5 V	V_{CC} – 0.1			V_{CC} – 0.1			V
	I_{OH} = –2 mA	2.3 V	2			2			
	I_{OH} = –6 mA	3 V	2.48			2.48			
	I_{OH} = –12 mA	4.5 V	3.8			3.8			
V_{OL}	I_{OL} = 50 µA	2 to 5.5 V			0.1			0.1	V
	I_{OL} = 2 mA	2.3 V			0.4			0.4	
	I_{OL} = 6 mA	3 V			0.44			0.44	
	I_{OL} = 12 mA	4.5 V			0.55			0.55	
I_I	V_I = 5.5 V or GND	0 to 5.5 V			±1			±1	µA
I_{CC}	V_I = V_{CC} or GND, I_O = 0	5.5 V			20			20	µA
I_{off}	V_I or V_O = 0 to 5.5 V	0			5			5	µA
C_i	V_I = V_{CC} or GND	3.3 V		1.4			1.4		pF

7.6 Switching Characteristics, V_{CC} = 2.5 V ±0.2 V

over recommended operating free-air temperature range (unless otherwise noted) (see Figure 3)

PARAMETER	FROM (INPUT)	TO (OUTPUT)	LOAD CAPACITANCE	T_A = 25°C			MIN	MAX	UNIT
				MIN	TYP	MAX			
t_{pd}	A or B	Y	C_L = 15 pF		7.9 (1)	17.6 (1)	1 (2)	21 (2)	ns
			C_L = 50 pF		10.5	22.6	1	26.5	

(1) On products compliant to MIL-PRF-38535, this parameter is not production tested.
(2) This note applies to SN54LV86A only: On products compliant to MIL-PRF-38535, this parameter is not production tested.

7.7 Switching Characteristics, V_{CC} = 3.3 V ±0.3 V

over recommended operating free-air temperature range (unless otherwise noted) (see Figure 3)

PARAMETER	FROM (INPUT)	TO (OUTPUT)	LOAD CAPACITANCE	T_A = 25°C			MIN	MAX	UNIT
				MIN	TYP	MAX			
t_{pd}	A or B	Y	C_L = 15 pF		5.5 (1)	11 (1)	1 (2)	13 (2)	ns
			C_L = 50 pF		7.4	14.5	1	16.5	

(1) On products compliant to MIL-PRF-38535, this parameter is not production tested.
(2) This note applies to SN54LV86A only: On products compliant to MIL-PRF-38535, this parameter is not production tested.

7.8 Switching Characteristics, V_{CC} = 5 V ±0.5 V

over recommended operating free-air temperature range (unless otherwise noted) (see Figure 3)

PARAMETER	FROM (INPUT)	TO (OUTPUT)	LOAD CAPACITANCE	T_A = 25°C			MIN	MAX	UNIT
				MIN	TYP	MAX			
t_{pd}	A or B	Y	C_L = 15 pF		3.7 (1)	6.8 (1)	1 (2)	8 (2)	ns
			C_L = 50 pF		5.3	8.8	1	10	

(1) On products compliant to MIL-PRF-38535, this parameter is not production tested.
(2) This note applies to SN54LV86A only: On products compliant to MIL-PRF-38535, this parameter is not production tested.

Copyright © 1998–2015, Texas Instruments Incorporated

7.9 Noise Characteristics for SN74LV86A

V_{CC} = 3.3 V, C_L = 50 pF, T_A = 25°C (see (1))

PARAMETER		MIN	TYP	MAX	UNIT
$V_{OL(P)}$	Quiet output, maximum dynamic V_{OL}		0.2	0.8	V
$V_{OL(V)}$	Quiet output, minimum dynamic V_{OL}		–0.1	–0.8	
$V_{OH(V)}$	Quiet output, minimum dynamic V_{OH}		3.1		
$V_{IH(D)}$	High-level dynamic input voltage	2.31			
$V_{IL(D)}$	Low-level dynamic input voltage			0.99	

(1) Characteristics are for surface-mount packages only.

7.10 Operating Characteristics

T_A = 25°C

PARAMETER		TEST CONDITIONS	V_{CC}	TYP	UNIT
C_{pd}	Power dissipation capacitance	C_L = 50 pF, f = 10 MHz	3.3 V	8.4	pF
			5 V	8.8	

7.11 Typical Characteristics

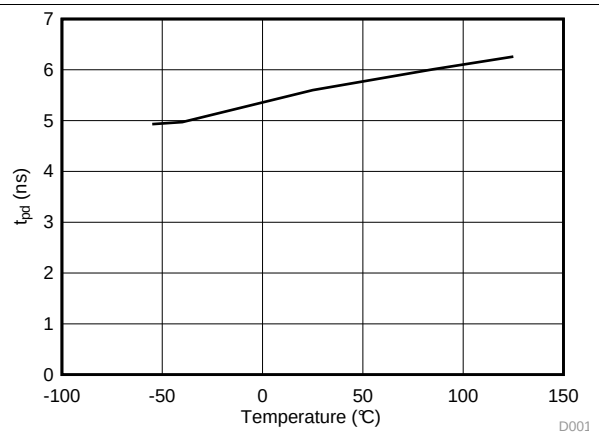

Figure 1. t_{pd} vs Temperature at 3.3 V

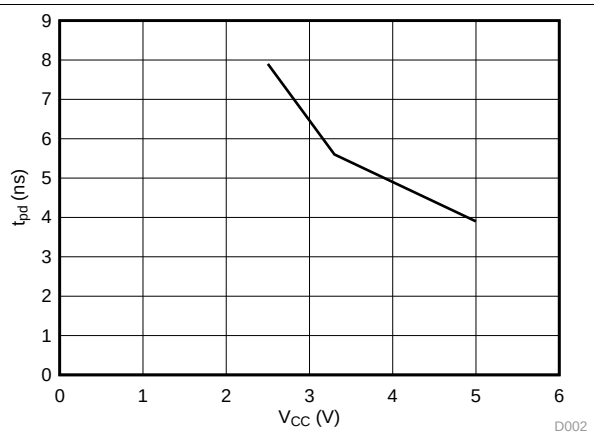

Figure 2. t_{pd} vs V_{CC} at 25°C

8 Parameter Measurement Information

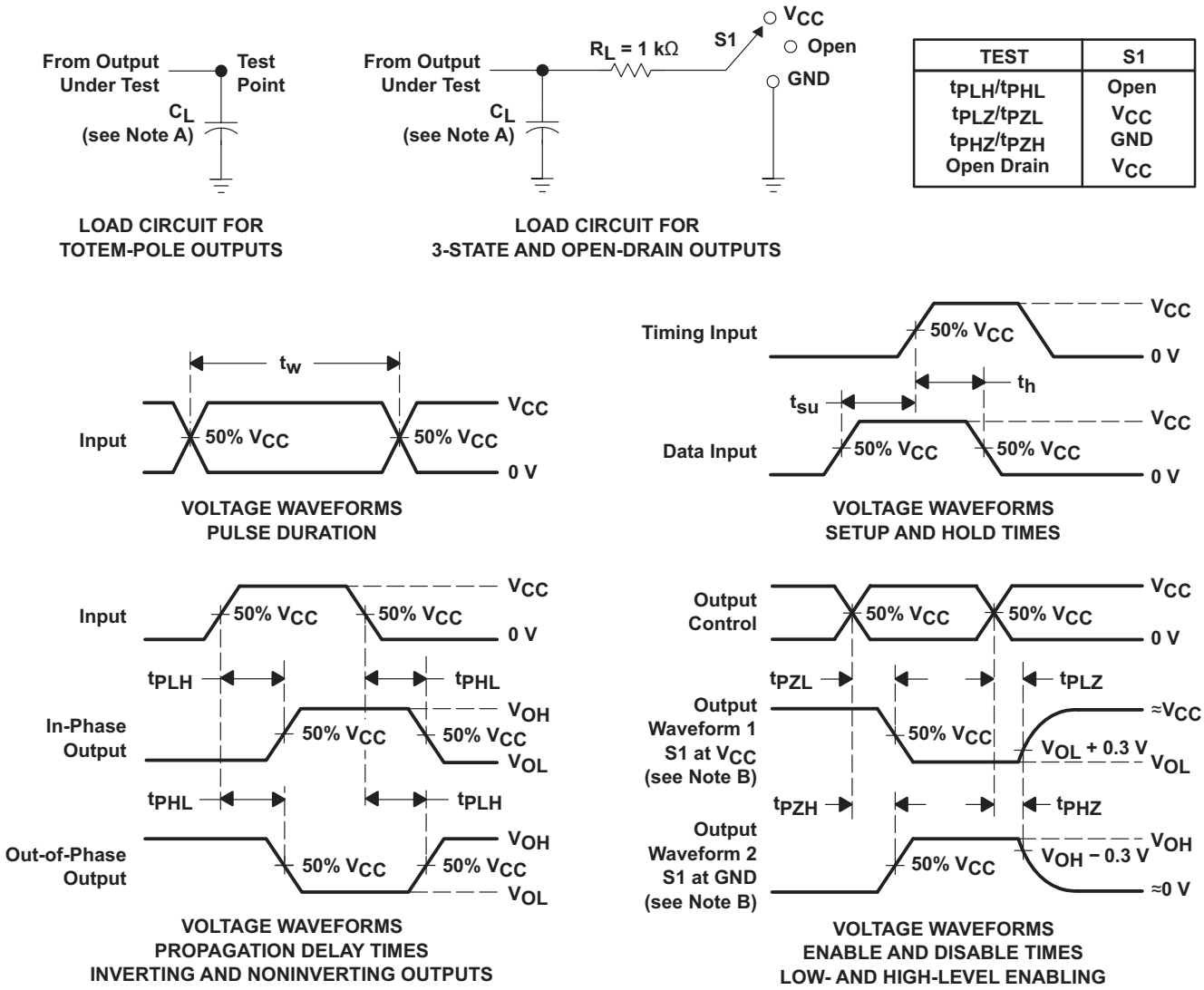

TEST	S1
t_{PLH}/t_{PHL}	Open
t_{PLZ}/t_{PZL}	V_{CC}
t_{PHZ}/t_{PZH}	GND
Open Drain	V_{CC}

A. C_L includes probe and jig capacitance.

B. Waveform 1 is for an output with internal conditions such that the output is low, except when disabled by the output control. Waveform 2 is for an output with internal conditions such that the output is high, except when disabled by the output control.

C. All input pulses are supplied by generators having the following characteristics: PRR ≤ 1 MHz, Z_O = 50 Ω, t_r ≤ 3 ns, t_f ≤ 3 ns.

D. The outputs are measured one at a time, with one input transition per measurement.

E. t_{PLZ} and t_{PHZ} are the same as t_{dis}.

F. t_{PZL} and t_{PZH} are the same as t_{en}.

G. t_{PHL} and t_{PLH} are the same as t_{pd}.

H. All parameters and waveforms are not applicable to all devices.

Figure 3. Load Circuit and Voltage Waveforms

Copyright © 1998–2015, Texas Instruments Incorporated

9 Detailed Description

9.1 Overview

The ’LV86A devices are quadruple 2-input exclusive-OR gates designed for 2-V to 5.5-V V_{CC} operation.

These devices contain four independent 2-input exclusive-OR gates. They perform the Boolean function $Y = A \oplus B$ or $Y = \overline{A}B + A\overline{B}$ in positive logic.

A common application is as a true/complement element. If one of the inputs is low, the other input is reproduced in true form at the output. If one of the inputs is high, the signal on the other input is reproduced inverted at the output.

9.2 Functional Block Diagram

An exclusive-OR gate has many applications, some of which can be represented better by alternative logic symbols.

A. These are five equivalent exclusive-OR symbols valid for an ’LV86A gate in positive logic; negation can be shown at any two ports.

Figure 4. Exclusive OR

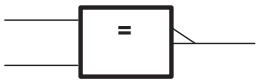

The output is active (low) if all inputs stand at the same logic level (that is, A = B).

Figure 5. Logic-Identity Element

The output is active (low) if an even number of inputs (that is, 0 or 2) are active.

Figure 6. Even-Parity Element

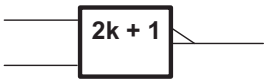

The output is active (high) if an odd number of inputs (that is, only 1 of the 2) are active.

Figure 7. Odd-Parity Element

9.3 Feature Description

- Wide operating voltage range, operates from 2 to 5.5 V
- Allows down voltage translation, inputs accept voltages to 5.5 V

9.4 Device Functional Modes

Table 1. Function Table (Each Gate)

INPUTS		OUTPUT Y
A	B	
L	L	L
L	H	H
H	L	H
H	H	L

10 Application and Implementation

NOTE

Information in the following applications sections is not part of the TI component specification, and TI does not warrant its accuracy or completeness. TI's customers are responsible for determining suitability of components for their purposes. Customers should validate and test their design implementation to confirm system functionality.

10.1 Application Information

The SN74LV86A is a low drive CMOS device that can be used for a multitude of bus interface type applications where output ringing is a concern. The low drive and slow edge rates will minimize overshoot and undershoot on the outputs. The inputs can accept voltages to 5.5 V at any valid V_{CC} making it Ideal for down translation.

10.2 Typical Application

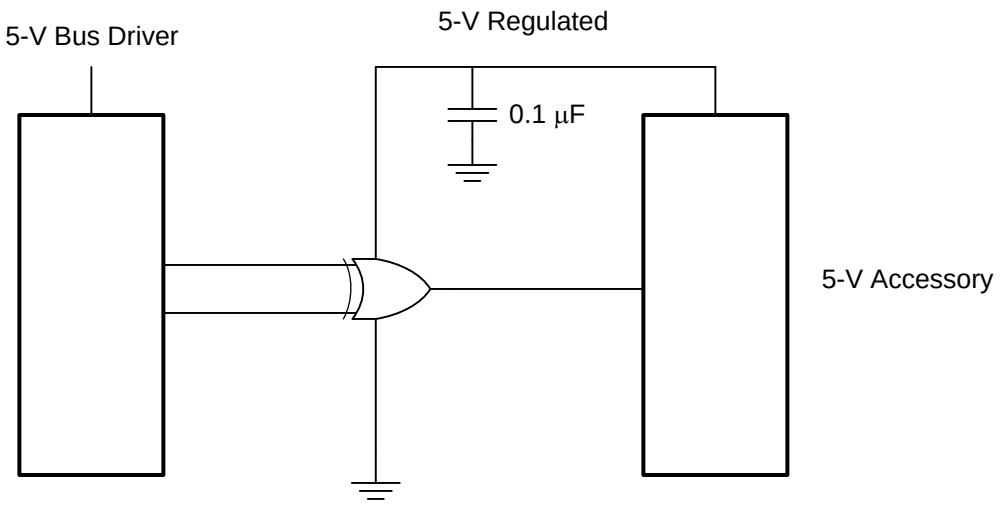

Figure 8. Typical Application Schematic

10.2.1 Design Requirements

This device uses CMOS technology and has balanced output drive. Care should be taken to avoid bus contention because it can drive currents that would exceed maximum limits. The high drive will also create fast edges into light loads so routing and load conditions should be considered to prevent ringing.

10.2.2 Detailed Design Procedure

1. Recommended Input conditions
   - Rise time and fall time specs see (Δt/ΔV) in *Recommended Operating Conditions.*
   - Specified High and low levels. See (V_{IH} and V_{IL}) in *Recommended Operating Conditions.*
2. Recommend output conditions
   - Load currents should not exceed 25 mA per output and 50 mA total for the part
   - Outputs should not be pulled above V_{CC}

Copyright © 1998–2015, Texas Instruments Incorporated

Typical Application (continued)

10.2.3 Application Curve

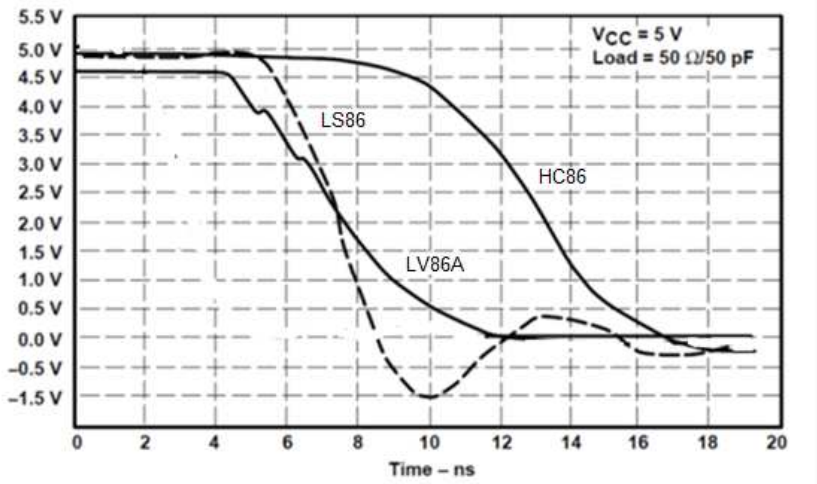

Figure 9. Switching Characteristics Comparison

11 Power Supply Recommendations

The power supply can be any voltage between the minimum and maximum supply voltage rating located in *Recommended Operating Conditions*.

Each V_{CC} terminal should have a good bypass capacitor to prevent power disturbance. For devices with a single supply, TI recommends 0.1 µF and if there are multiple V_{CC} terminals then .01 or .022 µF is recommended for each power terminal. It is okay to parallel multiple bypass capacitors to reject different frequencies of noise. A 0.1 µF and 1 µF are commonly used in parallel. The bypass capacitor should be installed as close to the power terminal as possible for best results.

12 Layout

12.1 Layout Guidelines

When using multiple bit logic devices inputs should not ever float.

In many cases, functions or parts of functions of digital logic devices are unused, for example, when only two inputs of a triple-input AND gate are used or only 3 of the 4 buffer gates are used. Such input pins should not be left unconnected because the undefined voltages at the outside connections result in undefined operational states. Specified below are the rules that must be observed under all circumstances. All unused inputs of digital logic devices must be connected to a high or low bias to prevent them from floating. The logic level that should be applied to any particular unused input depends on the function of the device. Generally they will be tied to GND or V_{CC} whichever make more sense or is more convenient. It is generally okay to float outputs unless the part is a transceiver. If the transceiver has an output enable pin it will disable the outputs section of the part when asserted. This will not disable the input section of the IOs so they also cannot float when disabled.

12.2 Layout Example

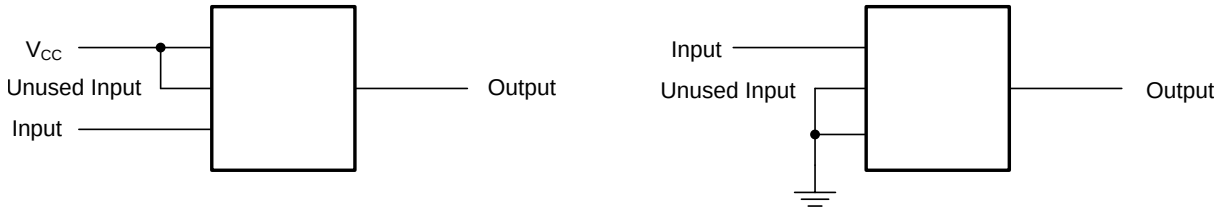

Figure 10. Layout Recommendation

13 Device and Documentation Support

13.1 Related Links

The table below lists quick access links. Categories include technical documents, support and community resources, tools and software, and quick access to sample or buy.

Table 2. Related Links

PARTS	PRODUCT FOLDER	SAMPLE & BUY	TECHNICAL DOCUMENTS	TOOLS & SOFTWARE	SUPPORT & COMMUNITY
SN54LV86A	Click here	Click here	Click here	Click here	Click here
SN74LV86A	Click here	Click here	Click here	Click here	Click here

13.2 Trademarks

All trademarks are the property of their respective owners.

13.3 Electrostatic Discharge Caution

These devices have limited built-in ESD protection. The leads should be shorted together or the device placed in conductive foam during storage or handling to prevent electrostatic damage to the MOS gates.

13.4 Glossary

SLYZ022 — *TI Glossary*.

This glossary lists and explains terms, acronyms, and definitions.

14 Mechanical, Packaging, and Orderable Information

The following pages include mechanical, packaging, and orderable information. This information is the most current data available for the designated devices. This data is subject to change without notice and revision of this document. For browser-based versions of this data sheet, refer to the left-hand navigation.

Copyright © 1998–2015, Texas Instruments Incorporated

PACKAGING INFORMATION

Orderable Device	Status (1)	Package Type	Package Drawing	Pins	Package Qty	Eco Plan (2)	Lead/Ball Finish (6)	MSL Peak Temp (3)	Op Temp (°C)	Device Marking (4/5)	Samples
SN74LV86AD	ACTIVE	SOIC	D	14	50	Green (RoHS & no Sb/Br)	CU NIPDAU	Level-1-260C-UNLIM	-40 to 125	LV86A	Samples
SN74LV86ADBR	ACTIVE	SSOP	DB	14	2000	Green (RoHS & no Sb/Br)	CU NIPDAU	Level-1-260C-UNLIM	-40 to 125	LV86A	Samples
SN74LV86ADGVR	ACTIVE	TVSOP	DGV	14	2000	Green (RoHS & no Sb/Br)	CU NIPDAU	Level-1-260C-UNLIM	-40 to 125	LV86A	Samples
SN74LV86ADR	ACTIVE	SOIC	D	14	2500	Green (RoHS & no Sb/Br)	CU NIPDAU	Level-1-260C-UNLIM	-40 to 125	LV86A	Samples
SN74LV86ANSR	ACTIVE	SO	NS	14	2000	Green (RoHS & no Sb/Br)	CU NIPDAU	Level-1-260C-UNLIM	-40 to 125	74LV86A	Samples
SN74LV86APW	ACTIVE	TSSOP	PW	14	90	Green (RoHS & no Sb/Br)	CU NIPDAU	Level-1-260C-UNLIM	-40 to 125	LV86A	Samples
SN74LV86APWR	ACTIVE	TSSOP	PW	14	2000	Green (RoHS & no Sb/Br)	CU NIPDAU	Level-1-260C-UNLIM	-40 to 125	LV86A	Samples
SN74LV86APWRG4	ACTIVE	TSSOP	PW	14	2000	Green (RoHS & no Sb/Br)	CU NIPDAU	Level-1-260C-UNLIM	-40 to 125	LV86A	Samples
SN74LV86APWT	ACTIVE	TSSOP	PW	14	250	Green (RoHS & no Sb/Br)	CU NIPDAU	Level-1-260C-UNLIM	-40 to 125	LV86A	Samples

(1) The marketing status values are defined as follows:
ACTIVE: Product device recommended for new designs.
LIFEBUY: TI has announced that the device will be discontinued, and a lifetime-buy period is in effect.
NRND: Not recommended for new designs. Device is in production to support existing customers, but TI does not recommend using this part in a new design.
PREVIEW: Device has been announced but is not in production. Samples may or may not be available.
OBSOLETE: TI has discontinued the production of the device.

(2) **RoHS:** TI defines "RoHS" to mean semiconductor products that are compliant with the current EU RoHS requirements for all 10 RoHS substances, including the requirement that RoHS substance do not exceed 0.1% by weight in homogeneous materials. Where designed to be soldered at high temperatures, "RoHS" products are suitable for use in specified lead-free processes. TI may reference these types of products as "Pb-Free".
RoHS Exempt: TI defines "RoHS Exempt" to mean products that contain lead but are compliant with EU RoHS pursuant to a specific EU RoHS exemption.
Green: TI defines "Green" to mean the content of Chlorine (Cl) and Bromine (Br) based flame retardants meet JS709B low halogen requirements of <=1000ppm threshold. Antimony trioxide based flame retardants must also meet the <=1000ppm threshold requirement.

(3) MSL, Peak Temp. - The Moisture Sensitivity Level rating according to the JEDEC industry standard classifications, and peak solder temperature.

(4) There may be additional marking, which relates to the logo, the lot trace code information, or the environmental category on the device.

(5) Multiple Device Markings will be inside parentheses. Only one Device Marking contained in parentheses and separated by a "~" will appear on a device. If a line is indented then it is a continuation of the previous line and the two combined represent the entire Device Marking for that device.

(6) Lead/Ball Finish - Orderable Devices may have multiple material finish options. Finish options are separated by a vertical ruled line. Lead/Ball Finish values may wrap to two lines if the finish value exceeds the maximum column width.

Important Information and Disclaimer: The information provided on this page represents TI's knowledge and belief as of the date that it is provided. TI bases its knowledge and belief on information provided by third parties, and makes no representation or warranty as to the accuracy of such information. Efforts are underway to better integrate information from third parties. TI has taken and continues to take reasonable steps to provide representative and accurate information but may not have conducted destructive testing or chemical analysis on incoming materials and chemicals. TI and TI suppliers consider certain information to be proprietary, and thus CAS numbers and other limited information may not be available for release.

In no event shall TI's liability arising out of such information exceed the total purchase price of the TI part(s) at issue in this document sold by TI to Customer on an annual basis.

OTHER QUALIFIED VERSIONS OF SN74LV86A :

- Automotive: SN74LV86A-Q1
- Enhanced Product: SN74LV86A-EP

NOTE: Qualified Version Definitions:

- Automotive - Q100 devices qualified for high-reliability automotive applications targeting zero defects
- Enhanced Product - Supports Defense, Aerospace and Medical Applications

TAPE AND REEL INFORMATION

REEL DIMENSIONS

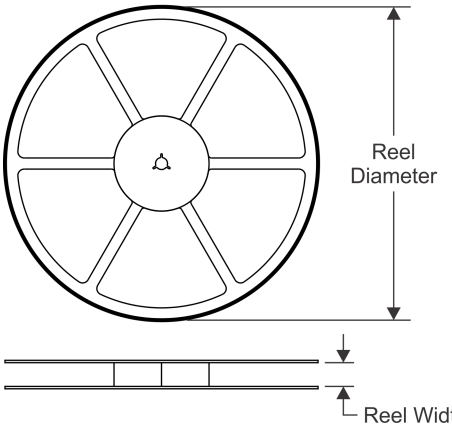

TAPE DIMENSIONS

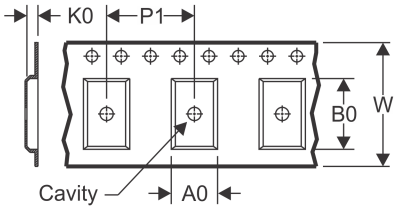

A0	Dimension designed to accommodate the component width
B0	Dimension designed to accommodate the component length
K0	Dimension designed to accommodate the component thickness
W	Overall width of the carrier tape
P1	Pitch between successive cavity centers

QUADRANT ASSIGNMENTS FOR PIN 1 ORIENTATION IN TAPE

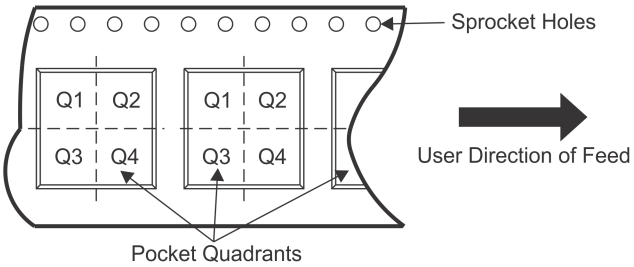

*All dimensions are nominal

Device	Package Type	Package Drawing	Pins	SPQ	Reel Diameter (mm)	Reel Width W1 (mm)	A0 (mm)	B0 (mm)	K0 (mm)	P1 (mm)	W (mm)	Pin1 Quadrant
SN74LV86ADGVR	TVSOP	DGV	14	2000	330.0	12.4	6.8	4.0	1.6	8.0	12.0	Q1
SN74LV86ADR	SOIC	D	14	2500	330.0	16.4	6.5	9.0	2.1	8.0	16.0	Q1
SN74LV86ANSR	SO	NS	14	2000	330.0	16.4	8.2	10.5	2.5	12.0	16.0	Q1
SN74LV86APWR	TSSOP	PW	14	2000	330.0	12.4	6.9	5.6	1.6	8.0	12.0	Q1
SN74LV86APWT	TSSOP	PW	14	250	330.0	12.4	6.9	5.6	1.6	8.0	12.0	Q1

TAPE AND REEL BOX DIMENSIONS

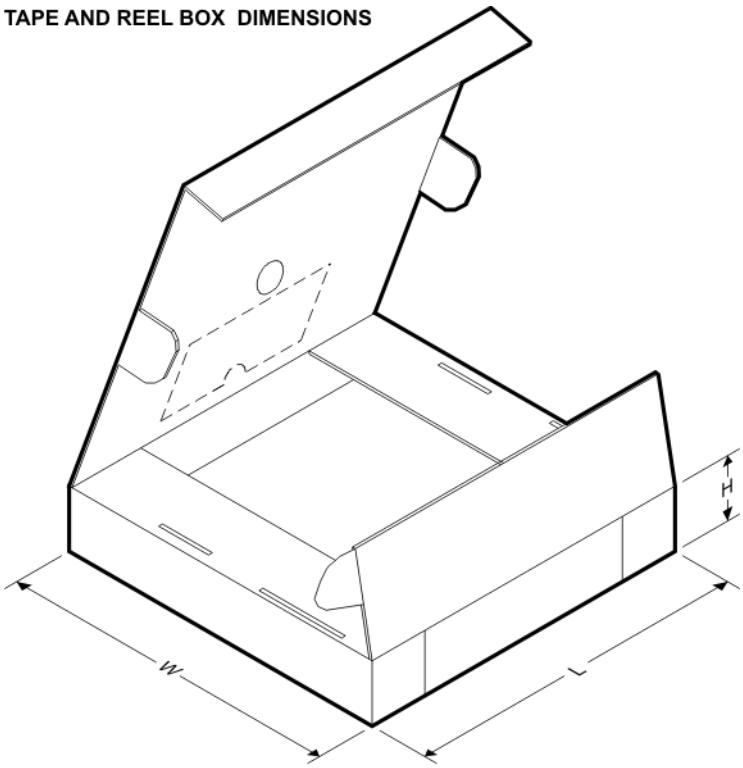

*All dimensions are nominal

Device	Package Type	Package Drawing	Pins	SPQ	Length (mm)	Width (mm)	Height (mm)
SN74LV86ADGVR	TVSOP	DGV	14	2000	367.0	367.0	35.0
SN74LV86ADR	SOIC	D	14	2500	367.0	367.0	38.0
SN74LV86ANSR	SO	NS	14	2000	367.0	367.0	38.0
SN74LV86APWR	TSSOP	PW	14	2000	367.0	367.0	35.0
SN74LV86APWT	TSSOP	PW	14	250	367.0	367.0	35.0

DGV (R-PDSO-G)** **PLASTIC SMALL-OUTLINE**

24 PINS SHOWN

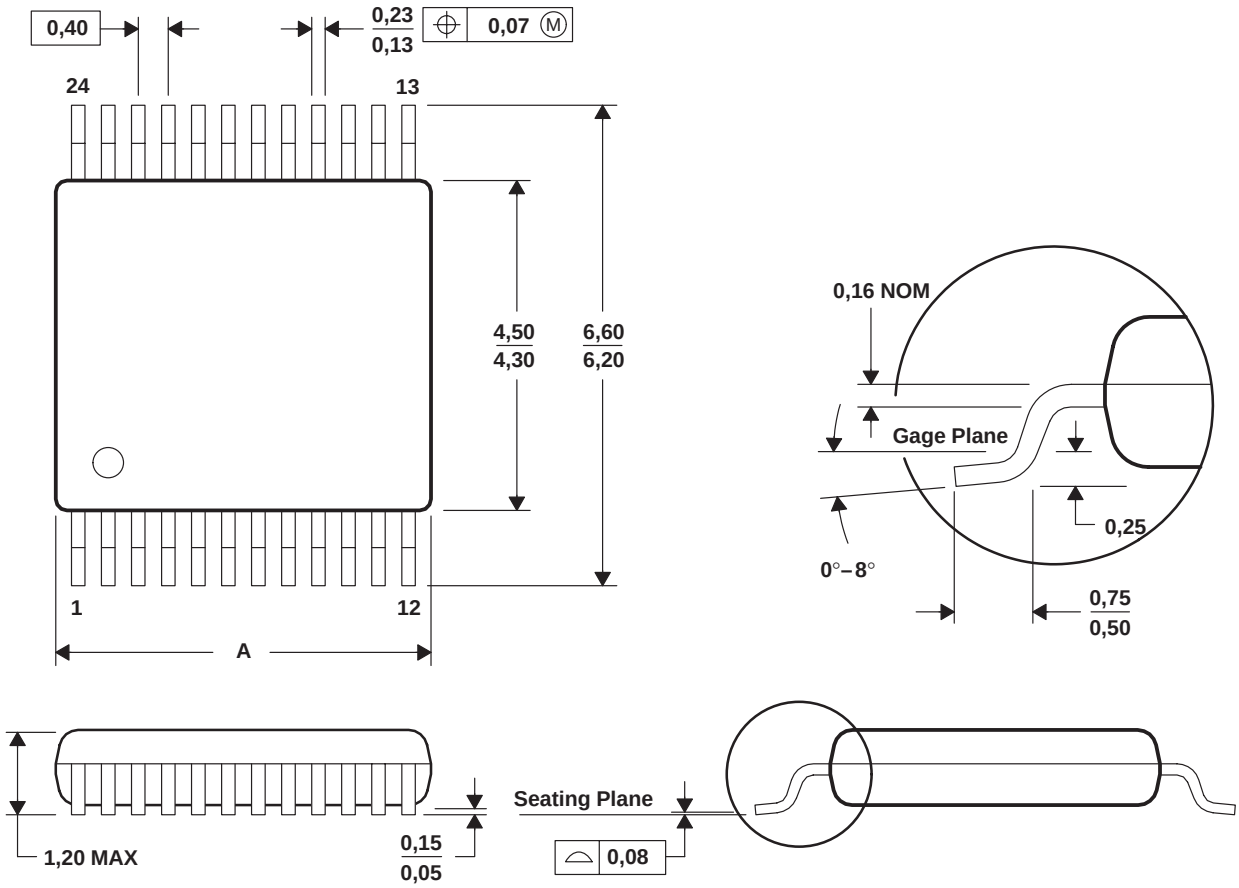

DIM \ PINS **	14	16	20	24	38	48	56
A MAX	3,70	3,70	5,10	5,10	7,90	9,80	11,40
A MIN	3,50	3,50	4,90	4,90	7,70	9,60	11,20

4073251/E 08/00

NOTES: A. All linear dimensions are in millimeters.
B. This drawing is subject to change without notice.
C. Body dimensions do not include mold flash or protrusion, not to exceed 0,15 per side.
D. Falls within JEDEC: 24/48 Pins – MO-153
14/16/20/56 Pins – MO-194

D (R–PDSO–G14) PLASTIC SMALL OUTLINE

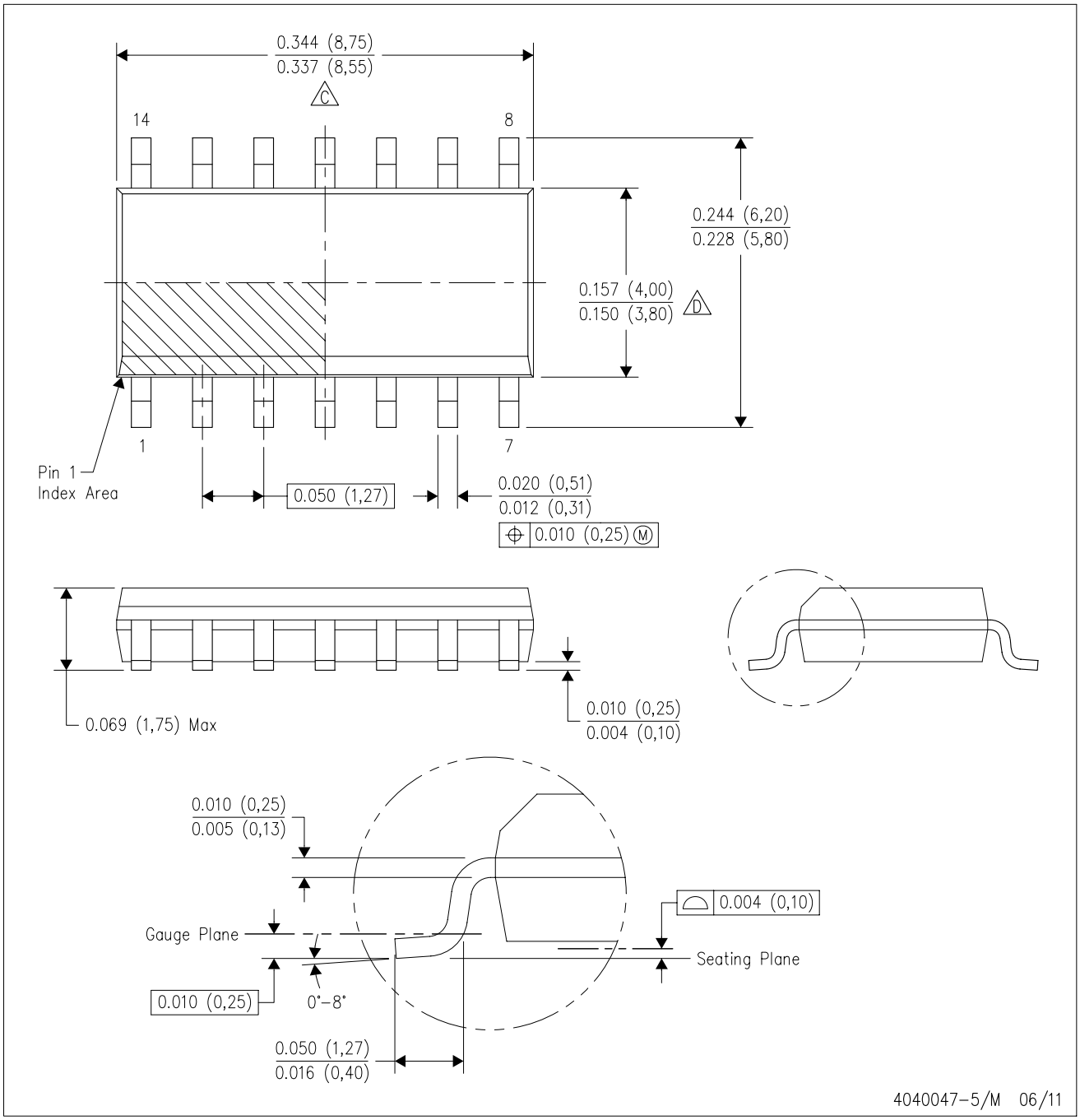

NOTES:
A. All linear dimensions are in inches (millimeters).
B. This drawing is subject to change without notice.
C. Body length does not include mold flash, protrusions, or gate burrs. Mold flash, protrusions, or gate burrs shall not exceed 0.006 (0,15) each side.
D. Body width does not include interlead flash. Interlead flash shall not exceed 0.017 (0,43) each side.
E. Reference JEDEC MS–012 variation AB.

D (R–PDSO–G14) PLASTIC SMALL OUTLINE

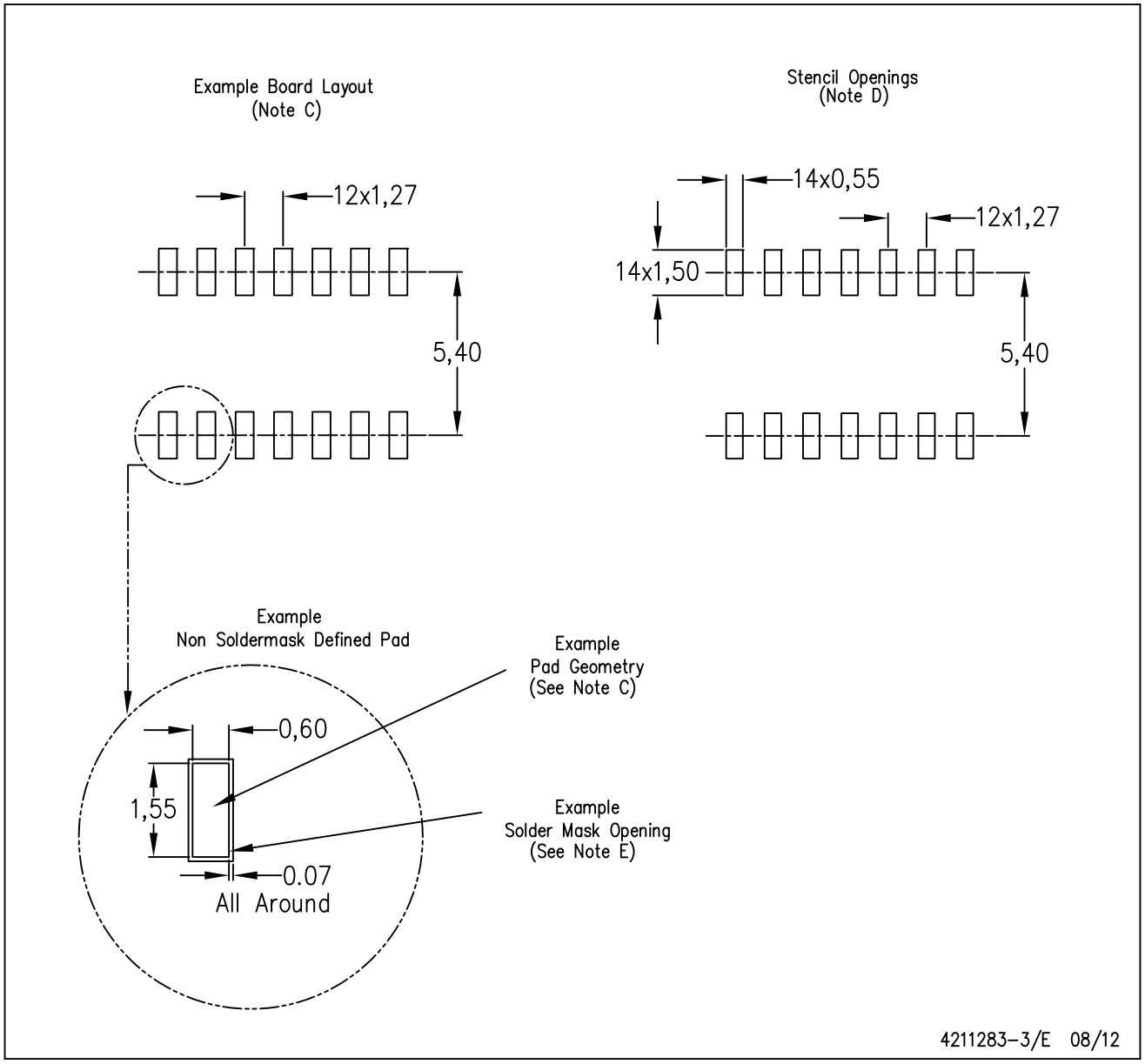

NOTES:
A. All linear dimensions are in millimeters.
B. This drawing is subject to change without notice.
C. Publication IPC–7351 is recommended for alternate designs.
D. Laser cutting apertures with trapezoidal walls and also rounding corners will offer better paste release. Customers should contact their board assembly site for stencil design recommendations. Refer to IPC–7525 for other stencil recommendations.
E. Customers should contact their board fabrication site for solder mask tolerances between and around signal pads.

PW (R–PDSO–G14) PLASTIC SMALL OUTLINE

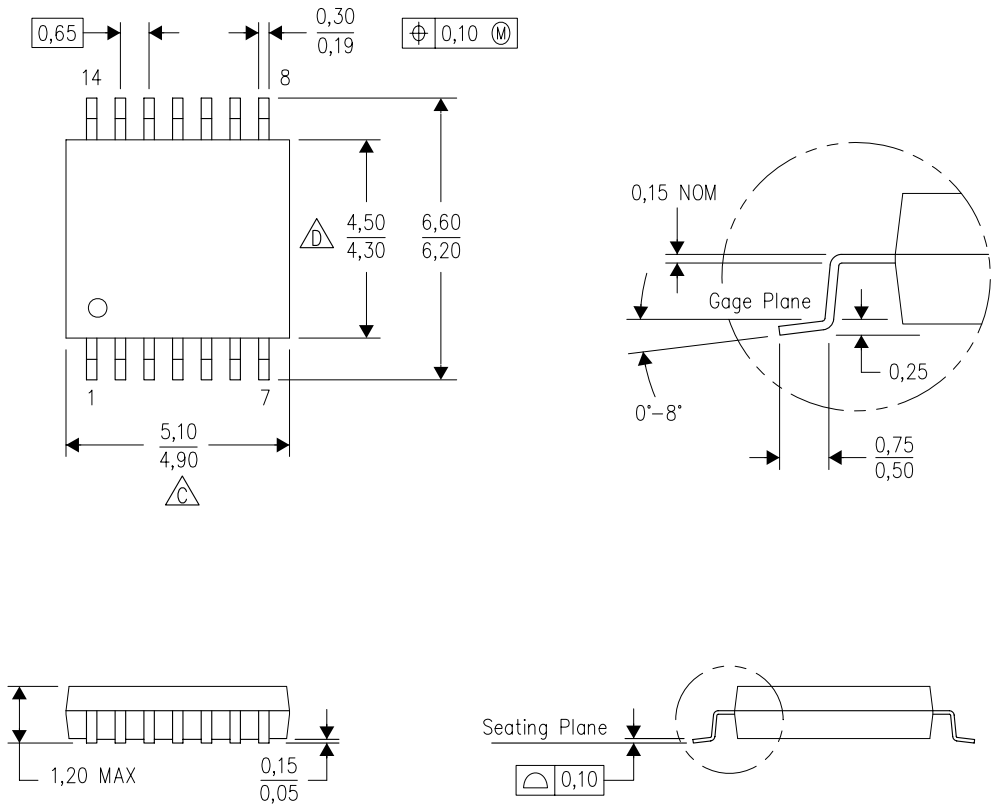

NOTES:
A. All linear dimensions are in millimeters. Dimensioning and tolerancing per ASME Y14.5M–1994.
B. This drawing is subject to change without notice.
C. Body length does not include mold flash, protrusions, or gate burrs. Mold flash, protrusions, or gate burrs shall not exceed 0,15 each side.
D. Body width does not include interlead flash. Interlead flash shall not exceed 0,25 each side.
E. Falls within JEDEC MO–153

PW (R–PDSO–G14) PLASTIC SMALL OUTLINE

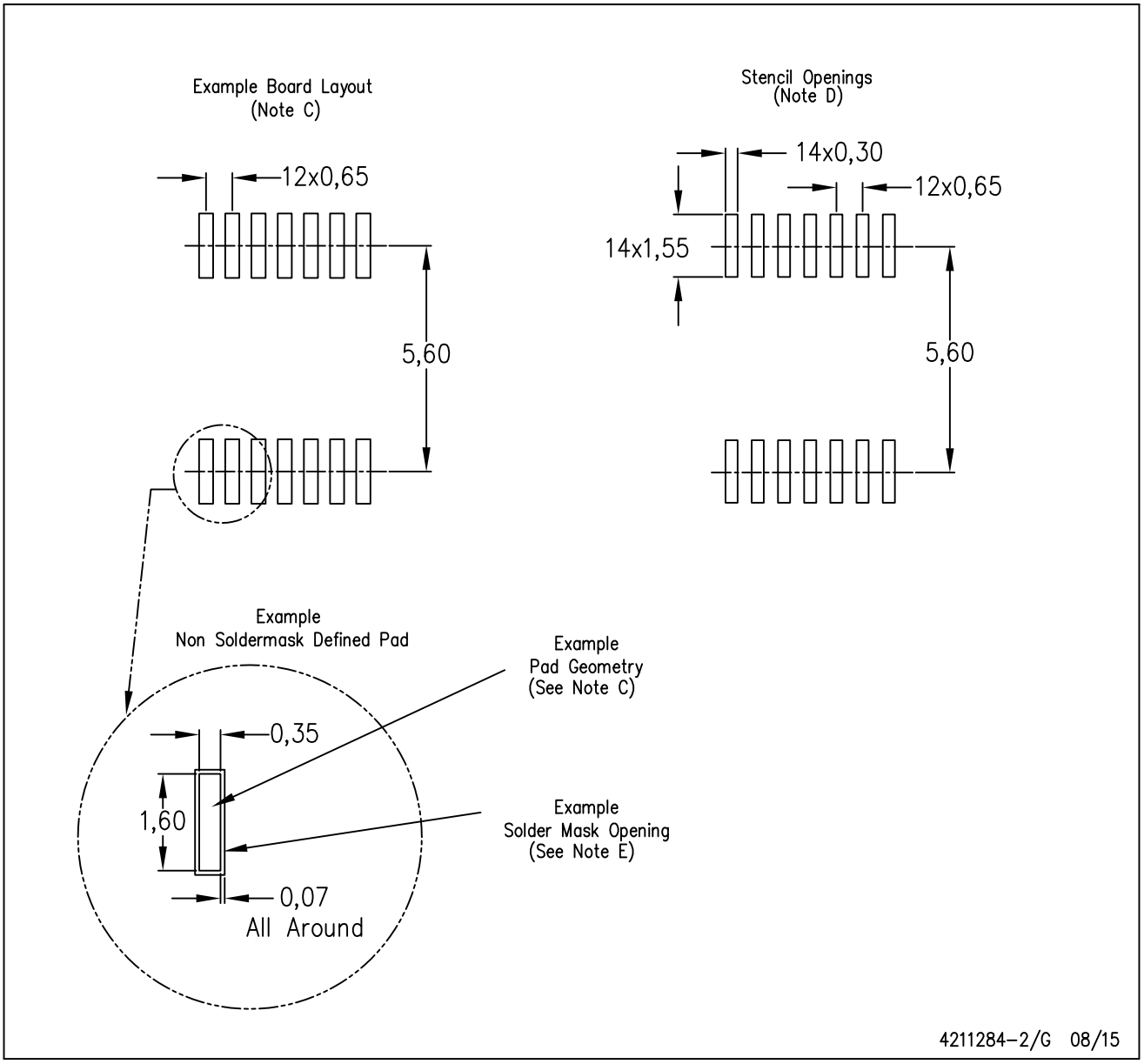

NOTES:
A. All linear dimensions are in millimeters.
B. This drawing is subject to change without notice.
C. Publication IPC–7351 is recommended for alternate designs.
D. Laser cutting apertures with trapezoidal walls and also rounding corners will offer better paste release. Customers should contact their board assembly site for stencil design recommendations. Refer to IPC–7525 for other stencil recommendations.
E. Customers should contact their board fabrication site for solder mask tolerances between and around signal pads.

MECHANICAL DATA

NS (R-PDSO-G)** **PLASTIC SMALL-OUTLINE PACKAGE**

14-PINS SHOWN

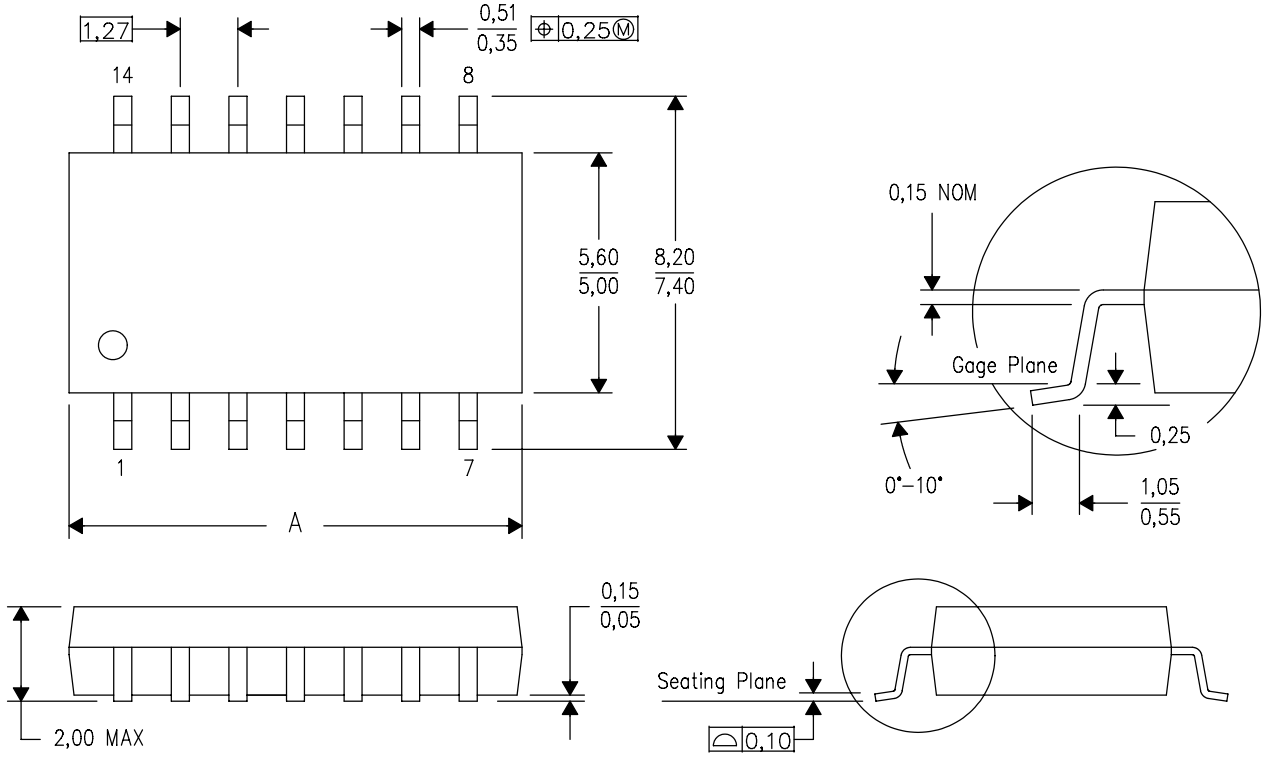

DIM \ PINS **	14	16	20	24
A MAX	10,50	10,50	12,90	15,30
A MIN	9,90	9,90	12,30	14,70

4040062/C 03/03

NOTES:
A. All linear dimensions are in millimeters.
B. This drawing is subject to change without notice.
C. Body dimensions do not include mold flash or protrusion, not to exceed 0,15.

DB (R-PDSO-G)** **PLASTIC SMALL-OUTLINE**

28 PINS SHOWN

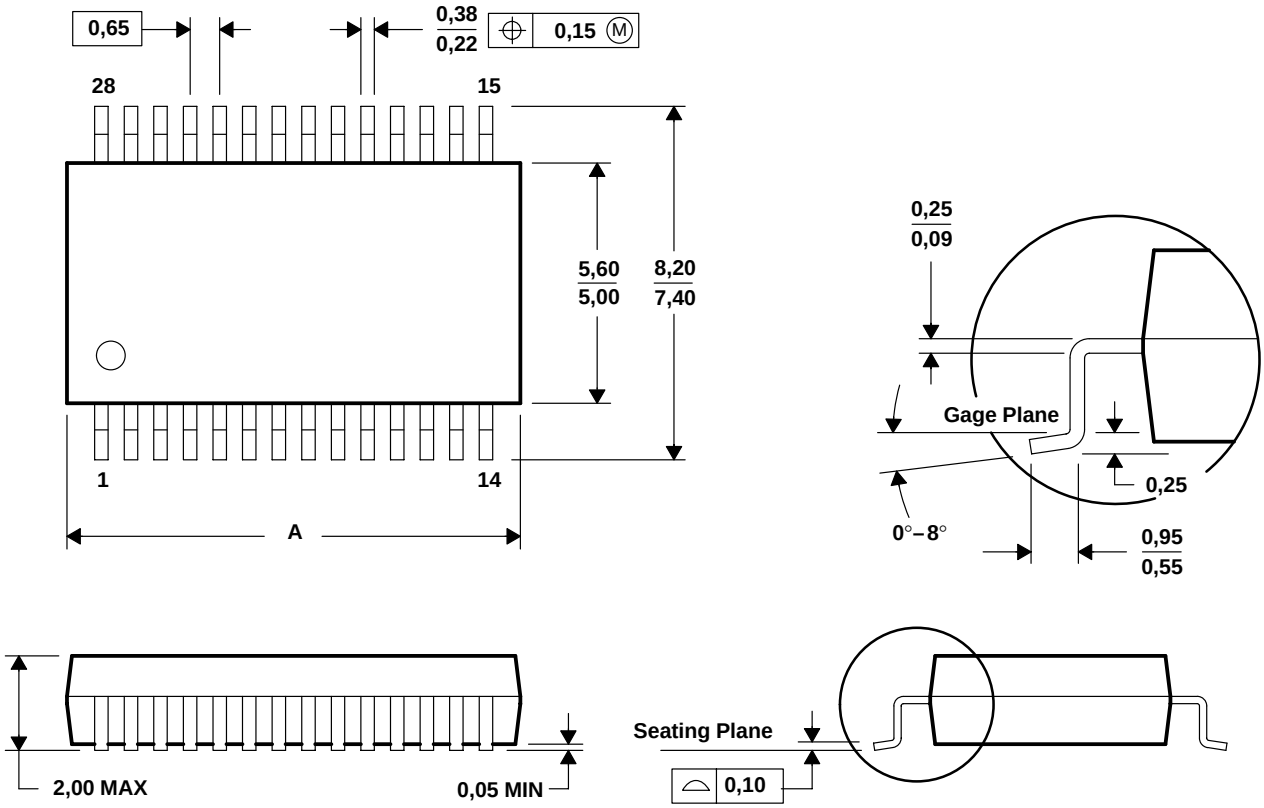

DIM \ PINS **	14	16	20	24	28	30	38
A MAX	6,50	6,50	7,50	8,50	10,50	10,50	12,90
A MIN	5,90	5,90	6,90	7,90	9,90	9,90	12,30

4040065 /E 12/01

NOTES: A. All linear dimensions are in millimeters.
B. This drawing is subject to change without notice.
C. Body dimensions do not include mold flash or protrusion not to exceed 0,15.
D. Falls within JEDEC MO-150

IMPORTANT NOTICE AND DISCLAIMER

TI PROVIDES TECHNICAL AND RELIABILITY DATA (INCLUDING DATASHEETS), DESIGN RESOURCES (INCLUDING REFERENCE DESIGNS), APPLICATION OR OTHER DESIGN ADVICE, WEB TOOLS, SAFETY INFORMATION, AND OTHER RESOURCES “AS IS” AND WITH ALL FAULTS, AND DISCLAIMS ALL WARRANTIES, EXPRESS AND IMPLIED, INCLUDING WITHOUT LIMITATION ANY IMPLIED WARRANTIES OF MERCHANTABILITY, FITNESS FOR A PARTICULAR PURPOSE OR NON-INFRINGEMENT OF THIRD PARTY INTELLECTUAL PROPERTY RIGHTS.

These resources are intended for skilled developers designing with TI products. You are solely responsible for (1) selecting the appropriate TI products for your application, (2) designing, validating and testing your application, and (3) ensuring your application meets applicable standards, and any other safety, security, or other requirements. These resources are subject to change without notice. TI grants you permission to use these resources only for development of an application that uses the TI products described in the resource. Other reproduction and display of these resources is prohibited. No license is granted to any other TI intellectual property right or to any third party intellectual property right. TI disclaims responsibility for, and you will fully indemnify TI and its representatives against, any claims, damages, costs, losses, and liabilities arising out of your use of these resources.

TI’s products are provided subject to TI’s Terms of Sale (www.ti.com/legal/termsofsale.html) or other applicable terms available either on ti.com or provided in conjunction with such TI products. TI’s provision of these resources does not expand or otherwise alter TI’s applicable warranties or warranty disclaimers for TI products.

Mailing Address: Texas Instruments, Post Office Box 655303, Dallas, Texas 75265
Copyright © 2019, Texas Instruments Incorporated

Looking for pricing, stock, or lifecycle information?

Click below to explore more details on WIN SOURCE:

- View SN74LV86ADR on WIN SOURCE
- Texas Instruments Information

Optimize Your Supply Chain with WIN SOURCE Solutions

- Global Sourcing Solution
- Obsolete Management
- Cost Control Management
- Shortage Management
- Alternative Solution
- Excess Inventory Management