THE DATASHEET OF

LM2674N-12/NOPB

www.win-source.net 0086-755-83957316

LM2674 SIMPLE SWITCHER® Power Converter High Efficiency 500-mA Step-Down Voltage Regulator

1 Features

- Efficiency up to 96%
- Available in 8-Pin SOIC, PDIP, and 16-Pin WSON Packages
- Simple and Easy to Design With
- Requires Only 5 External Components
- Uses Readily Available Standard Inductors
- 3-V, 5-V, 12-V, and Adjustable Output Versions
- Adjustable Version Output Voltage Range: 1.21 V to 37 V
- ±1.5% Maximum Output Voltage Tolerance Over Line and Load Conditions
- Ensured 500-mA Output Load Current
- 0.25-Ω DMOS Output Switch
- Wide Input Voltage Range: 8 V to 40 V
- 260-kHz Fixed Frequency Internal Oscillator
- TTL Shutdown Capability, Low Power Standby Mode
- Thermal Shutdown and Current Limit Protection

2 Applications

- Simple High Efficiency (>90%) Step-Down (Buck) Regulators
- Efficient Preregulator for Linear Regulators
- Positive-to-Negative Converters

3 Description

The LM2674 series of regulators are monolithic integrated circuits built with a LMDMOS process. These regulators provide all the active functions for a step-down (buck) switching regulator, capable of driving a 500-mA load current with excellent line and load regulation. These devices are available in fixed output voltages of 3.3 V, 5 V, 12 V, and an adjustable output version.

Requiring a minimum number of external components, these regulators are simple to use and include patented internal frequency compensation and a fixed frequency oscillator.

The LM2674 series operates at a switching frequency of 260 kHz, thus allowing smaller sized filter components than what is required with lower frequency switching regulators. Because of its very high efficiency (>90%), the copper traces on the printed-circuit board are the only heat sinking required.

A family of standard inductors for use with the LM2674 are available from several different manufacturers. This feature greatly simplifies the design of switch-mode power supplies using these advanced ICs. Also included in the data sheet are selector guides for diodes and capacitors designed to work in switch-mode power supplies.

Device Information(1)

PART NUMBER	PACKAGE	BODY SIZE (NOM)
LM2674	SOIC (8)	4.90 mm × 3.91 mm
	PDIP (8)	9.81 mm × 6.35 mm
	WSON (16)	5.00 mm × 5.00 mm

(1) For all available packages, see the orderable addendum at the end of the data sheet.

Typical Application

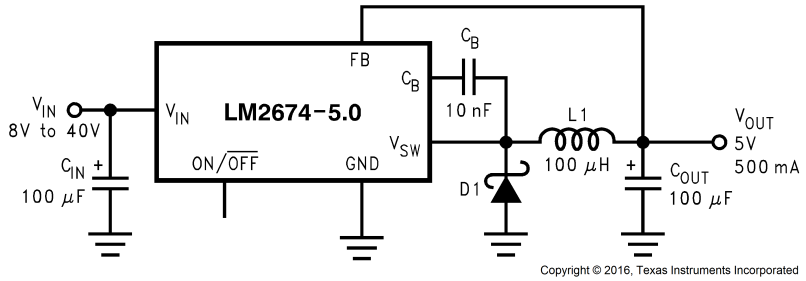

An IMPORTANT NOTICE at the end of this data sheet addresses availability, warranty, changes, use in safety-critical applications, intellectual property matters and other important disclaimers. PRODUCTION DATA.

Table of Contents

1 Features ... 1
2 Applications ... 1
3 Description ... 1
4 Revision History ... 2
5 Description (continued) ... 3
6 Pin Configuration and Functions ... 3
7 Specifications ... 4
7.1 Absolute Maximum Ratings ... 4
7.2 ESD Ratings ... 4
7.3 Recommended Operating Conditions ... 4
7.4 Thermal Information ... 4
7.5 Electrical Characteristics – 3.3-V Version ... 5
7.6 Electrical Characteristics – 5-V Version ... 5
7.7 Electrical Characteristics – 12-V Version ... 5
7.8 Electrical Characteristics – Adjustable Voltage Version ... 6
7.9 Electrical Characteristics – All Output Voltage Versions ... 6
7.10 Typical Characteristics ... 7
8 Detailed Description ... 10
8.1 Overview ... 10
8.2 Functional Block Diagram ... 10
8.3 Feature Description ... 10
8.4 Device Functional Modes ... 11
9 Application and Implementation ... 12
9.1 Application Information ... 12
9.2 Typical Applications ... 13
10 Power Supply Recommendations ... 24
11 Layout ... 25
11.1 Layout Guidelines ... 25
11.2 Layout Examples ... 25
12 Device and Documentation Support ... 27
12.1 Documentation Support ... 27
12.2 Receiving Notification of Documentation Updates 27
12.3 Community Resources ... 27
12.4 Trademarks ... 27
12.5 Electrostatic Discharge Caution ... 27
12.6 Glossary ... 27
13 Mechanical, Packaging, and Orderable Information ... 27

4 Revision History

NOTE: Page numbers for previous revisions may differ from page numbers in the current version.

Changes from Revision F (April 2013) to Revision G	Page
• Added *ESD Ratings* table, *Feature Description* section, *Device Functional Modes*, *Application and Implementation* section, *Power Supply Recommendations* section, *Layout* section, *Device and Documentation Support* section, and *Mechanical, Packaging, and Orderable Information* section	1
• Removed all references to Computer Design Software ***LM267X Made Simple*** (Version 6.0)	1

Changes from Revision E (April 2013) to Revision F	Page
• Changed layout of National Data Sheet to TI format	25

Copyright © 1998–2016, Texas Instruments Incorporated

5 Description (continued)

Other features include an ensured ±1.5% tolerance on output voltage within specified input voltages and output load conditions, and ±10% on the oscillator frequency. External shutdown is included, featuring typically 50-μA standby current. The output switch includes current limiting, as well as thermal shutdown for full protection under fault conditions.

6 Pin Configuration and Functions

D or P Package
8-Pin SOIC or PDIP
Top View

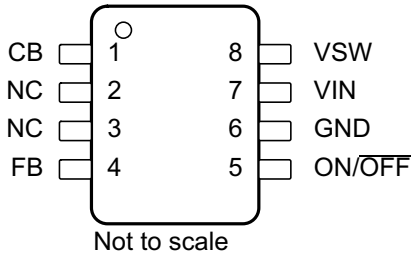

NHN Package
16-Pin WSON
Top View

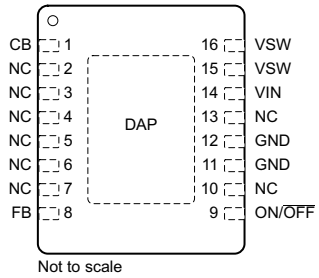

Connect DAP to pin 11 and 12.

Pin Functions

PIN			I/O	DESCRIPTION
NAME	SOIC, PDIP	WSON		
CB	1	1	I	Bootstrap capacitor connection for high-side driver. Connect a high-quality, 470-nF capacitor from CB to VSW Pin.
FB	4	8	I	Feedback sense input pin. Connect to the midpoint of feedback divider to set VOUT for ADJ version or connect this pin directly to the output capacitor for a fixed output version.
ON/$\overline{\text{OFF}}$	5	9	I	Enable input to the voltage regulator. High = ON and low = OFF. Pull this pin high or float to enable the regulator
VSW	8	15, 16	O	Source pin of the internal high-side FET. This is a switching node. Attached this pin to an inductor and the cathode of the external diode
GND	6	11, 12	—	Power ground pins. Connect to system ground. Ground pins of C_{IN} and C_{OUT}. Path to C_{IN} must be as short as possible.
VIN	7	14	I	Supply input pin to collector pin of high-side FET. Connect to power supply and input bypass capacitors C_{IN}. Path from VIN pin to high frequency bypass C_{IN} and GND must be as short as possible.
NC	2, 3	2, 3, 4, 5, 6, 7, 10, 13	—	No connect pins

Copyright © 1998–2016, Texas Instruments Incorporated

7 Specifications

7.1 Absolute Maximum Ratings

over operating free-air temperature range (unless otherwise noted)[1][2]

			MIN	MAX	UNIT
Supply voltage				45	V
ON/$\overline{\text{OFF}}$ pin voltage, V_{SH}			–0.1	6	V
Switch voltage to ground				–1	V
Boost pin voltage				V_{SW} + 8	V
Feedback pin voltage, V_{FB}			–0.3	14	V
Power dissipation			Internally Limited		
Lead temperature	D package	Vapor phase (60 s)		215	°C
		Infrared (15 s)		220	
	P package (soldering, 10 s)			260	
	WSON package		See AN-1187		
Maximum junction temperature				150	°C
Storage temperature, T_{stg}			–65	150	°C

(1) Stresses beyond those listed under *Absolute Maximum Ratings* may cause permanent damage to the device. These are stress ratings only, which do not imply functional operation of the device at these or any other conditions beyond those indicated under *Recommended Operating Conditions*. Exposure to absolute-maximum-rated conditions for extended periods may affect device reliability.
(2) If Military/Aerospace specified devices are required, please contact the Texas Instruments Sales Office/Distributors for availability and specifications.

7.2 ESD Ratings

			VALUE	UNIT
$V_{(ESD)}$	Electrostatic discharge	Human-body model (HBM), per ANSI/ESDA/JEDEC JS-001[1][2]	±2000	V

(1) JEDEC document JEP155 states that 500-V HBM allows safe manufacturing with a standard ESD control process.
(2) The human-body model is a 100-pF capacitor discharged through a 1.5-kΩ resistor into each pin.

7.3 Recommended Operating Conditions

	MIN	MAX	UNIT
Supply voltage	6.5	40	V
Junction temperature, T_J	–40	125	°C

7.4 Thermal Information

THERMAL METRIC[1]		LM2674			UNIT
		D (SOIC)	P (PDIP)	NHN (WSON)	
		8 PINS	8 PINS	16 PINS	
$R_{\theta JA}$	Junction-to-ambient thermal resistance[2]	105	95	—	°C/W

(1) For more information about traditional and new thermal metrics, see the *Semiconductor and IC Package Thermal Metrics* application report.
(2) Junction to ambient thermal resistance with approximately 1 square inch of printed-circuit board copper surrounding the leads. Additional copper area lowers thermal resistance further. The value $R_{\theta JA}$ for the WSON (NHN) package is specifically dependent on PCB trace area, trace material, and the number of layers and thermal vias. For improved thermal resistance and power dissipation for the WSON package, see *AN-1187 Leadless Leadframe Package (LLP)*.

Copyright © 1998–2016, Texas Instruments Incorporated

7.5 Electrical Characteristics – 3.3-V Version

T_J = 25°C (unless otherwise noted)

PARAMETER		TEST CONDITIONS		MIN(1)	TYP(2)	MAX(1)	UNIT
SYSTEM PARAMETERS (see Figure 15)(3)							
V_{OUT}	Output voltage	V_{IN} = 8 V to 40 V, I_{LOAD} = 20 mA to 500 mA	T_J = 25°C	3.251	3.3	3.35	V
			T_J = –40°C to 125°C	3.201		3.399	
		V_{IN} = 6.5 V to 40 V, I_{LOAD} = 20 mA to 250 mA	T_J = 25°C	3.251	3.3	3.35	
			T_J = –40°C to 125°C	3.201		3.399	
η	Efficiency	V_{IN} = 12 V, I_{LOAD} = 500 mA			86%		

(1) All limits are used to calculate Average Outgoing Quality Level (AOQL).
(2) Typical numbers are at 25°C and represent the most likely norm.
(3) External components such as the catch diode, inductor, input and output capacitors, and voltage programming resistors can affect switching regulator performance. When the LM2674 is used as shown in Figure 15 and Figure 19, system performance is as specified by the system parameters section of the Electrical Characteristics.

7.6 Electrical Characteristics – 5-V Version

T_J = 25°C (unless otherwise noted)

PARAMETER		TEST CONDITIONS		MIN(1)	TYP(2)	MAX(1)	UNIT
SYSTEM PARAMETERS (see Figure 15)(3)							
V_{OUT}	Output voltage	V_{IN} = 8 V to 40 V, I_{LOAD} = 20 mA to 500 mA	T_J = 25°C	4.925	5	5.075	V
			T_J = –40°C to 125°C	4.85		5.15	
		V_{IN} = 6.5 V to 40 V, I_{LOAD} = 20 mA to 250 mA	T_J = 25°C	4.925	5	5.075	
			T_J = –40°C to 125°C	4.85		5.15	
η	Efficiency	V_{IN} = 12 V, I_{LOAD} = 500 mA			90%		

(1) All limits are used to calculate Average Outgoing Quality Level (AOQL).
(2) Typical numbers are at 25°C and represent the most likely norm.
(3) External components such as the catch diode, inductor, input and output capacitors, and voltage programming resistors can affect switching regulator performance. When the LM2674 is used as shown in Figure 15 and Figure 19, system performance is as specified by the system parameters section of the Electrical Characteristics.

7.7 Electrical Characteristics – 12-V Version

T_J = 25°C (unless otherwise noted)

PARAMETER		TEST CONDITIONS		MIN(1)	TYP(2)	MAX(1)	UNIT
SYSTEM PARAMETERS (see Figure 15)(3)							
V_{OUT}	Output voltage	V_{IN} = 15 V to 40 V, I_{LOAD} = 20 mA to 500 mA	T_J = 25°C	11.82	12	12.18	V
			T_J = –40°C to 125°C	11.64		12.36	
η	Efficiency	V_{IN} = 24 V, I_{LOAD} = 500 mA			94%		

(1) All limits are used to calculate Average Outgoing Quality Level (AOQL).
(2) Typical numbers are at 25°C and represent the most likely norm.
(3) External components such as the catch diode, inductor, input and output capacitors, and voltage programming resistors can affect switching regulator performance. When the LM2674 is used as shown in Figure 15 and Figure 19, system performance is as specified by the system parameters section of the Electrical Characteristics.

Copyright © 1998–2016, Texas Instruments Incorporated

7.8 Electrical Characteristics – Adjustable Voltage Version

T_J = 25°C (unless otherwise noted)

PARAMETER		TEST CONDITIONS		MIN(1)	TYP(2)	MAX(1)	UNIT
SYSTEM PARAMETERS (see Figure 19)(3)							
V_{FB}	Feedback voltage	V_{IN} = 8 V to 40 V, I_{LOAD} = 20 mA to 500 mA, V_{OUT} programmed for 5 V (see Figure 19)	T_J = 25°C	1.192	1.21	1.228	V
			T_J = –40°C to 125°C	1.174		1.246	
		V_{IN} = 6.5 V to 40 V, I_{LOAD} = 20 mA to 250 mA, V_{OUT} programmed for 5 V (see Figure 19)	T_J = 25°C	1.192	1.21	1.228	
			T_J = –40°C to 125°C	1.174		1.246	
η	Efficiency	V_{IN} = 12 V, I_{LOAD} = 500 mA			90%		

(1) All limits are used to calculate Average Outgoing Quality Level (AOQL).
(2) Typical numbers are at 25°C and represent the most likely norm.
(3) External components such as the catch diode, inductor, input and output capacitors, and voltage programming resistors can affect switching regulator performance. When the LM2674 is used as shown in Figure 15 and Figure 19, system performance is as specified by the system parameters section of the Electrical Characteristics.

7.9 Electrical Characteristics – All Output Voltage Versions

T_J = 25°C, V_{IN} = 12 V for the 3.3-V, 5-V, and adjustable versions and V_{IN} = 24 V for the 12-V version, and I_{LOAD} = 100 mA (unless otherwise noted)

PARAMETERS		TEST CONDITIONS		MIN	TYP	MAX	UNIT
DEVICE PARAMETERS							
I_Q	Quiescent current	$V_{FEEDBACK}$ = 8 V for 3.3-V, 5-V, and adjustable voltage versions			2.5	3.6	mA
		$V_{FEEDBACK}$ = 15 V for 12-V versions			2.5		mA
I_{STBY}	Standby quiescent current	ON/$\overline{OFF}$ pin = 0 V	T_J = 25°C		50	100	µA
			T_J = –40°C to 125°C			150	
I_{CL}	Current limit	T_J = 25°C		0.62	0.8	1.2	A
		T_J = –40°C to 125°C		0.575		1.25	
I_L	Output leakage current	V_{IN} = 40 V, ON/$\overline{OFF}$ pin = 0 V, V_{SWITCH} = 0 V			1	25	µA
		V_{SWITCH} = −1 V, ON/$\overline{OFF}$ pin = 0 V			6	15	mA
$R_{DS(ON)}$	Switch ON-resistance	I_{SWITCH} = 500 mA	T_J = 25°C		0.25	0.4	Ω
			T_J = –40°C to 125°C			0.6	
f_O	Oscillator frequency	Measured at switch pin	T_J = 25°C		260		kHz
			T_J = –40°C to 125°C	225		275	
D	Maximum duty cycle				95%		
	Minimum duty cycle				0%		
I_{BIAS}	Feedback bias current	$V_{FEEDBACK}$ = 1.3 V (adjustable version only)			85		nA
$V_{S/D}$	ON/$\overline{OFF}$ pin voltage threshold	Turnon threshold, rising(1)	T_J = 25°C		1.4		V
			T_J = –40°C to 125°C	0.8		2	
$I_{S/D}$	ON/$\overline{OFF}$ pin current	ON/$\overline{OFF}$ pin = 0 V	T_J = 25°C		20		µA
			T_J = –40°C to 125°C	7		37	

(1) The ON/$\overline{OFF}$ pin is internally pulled up to 7 V and can be left floating for always-on operation.

Copyright © 1998–2016, Texas Instruments Incorporated

7.10 Typical Characteristics

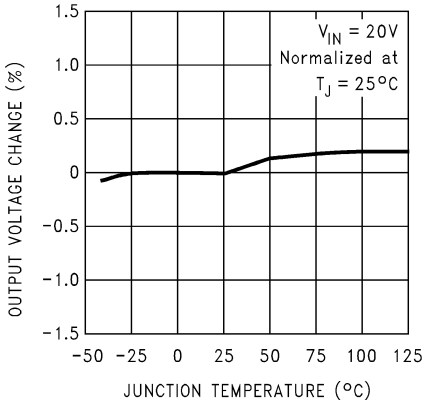

Figure 1. Normalized Output Voltage

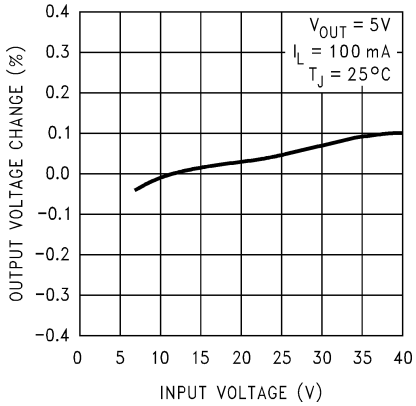

Figure 2. Line Regulation

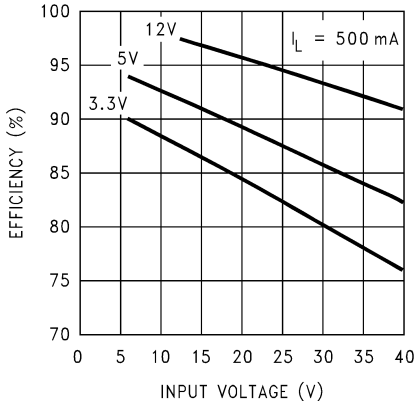

Figure 3. Efficiency

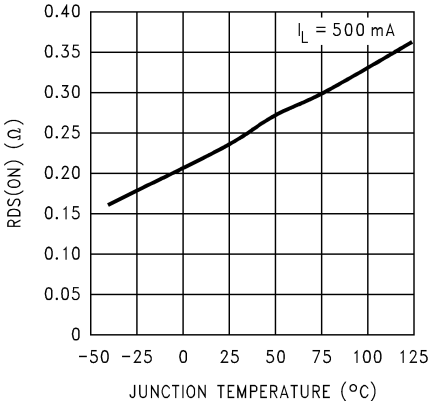

Figure 4. Drain-to-Source Resistance

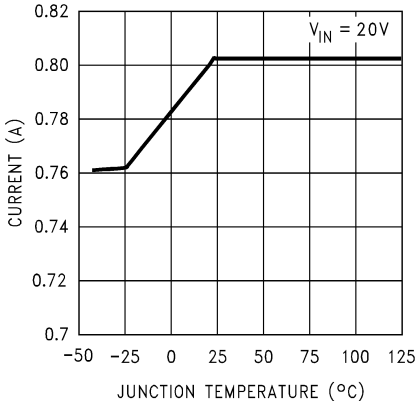

Figure 5. Switch Current Limit

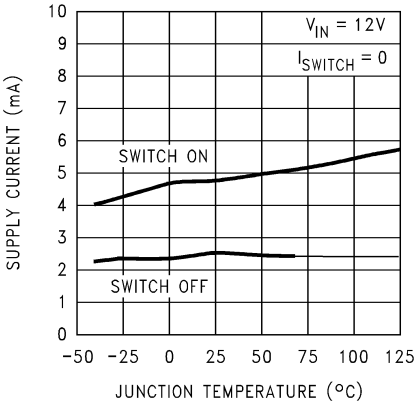

Figure 6. Operating Quiescent Current

Typical Characteristics (continued)

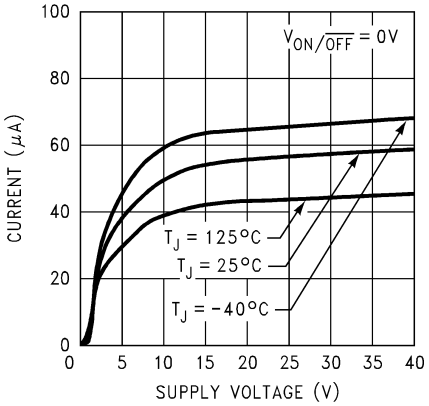

Figure 7. Standby Quiescent Current

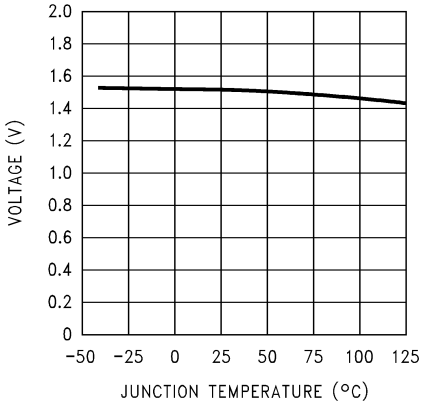

Figure 8. ON/$\overline{\text{OFF}}$ Threshold Voltage

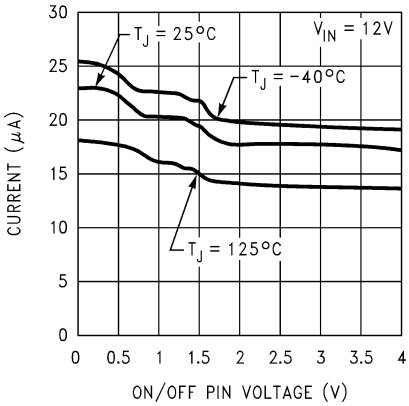

Figure 9. ON/$\overline{\text{OFF}}$ Pin Current (Sourcing)

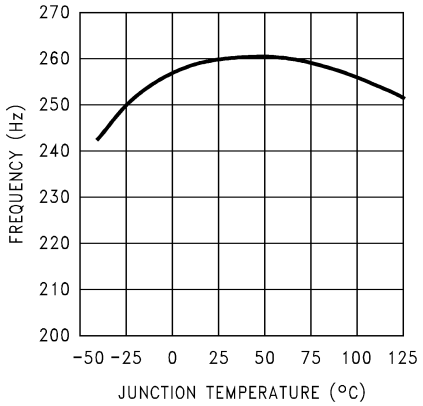

Figure 10. Switching Frequency

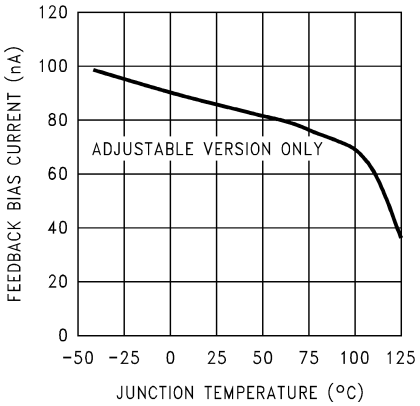

Figure 11. Feedback Pin Bias Current

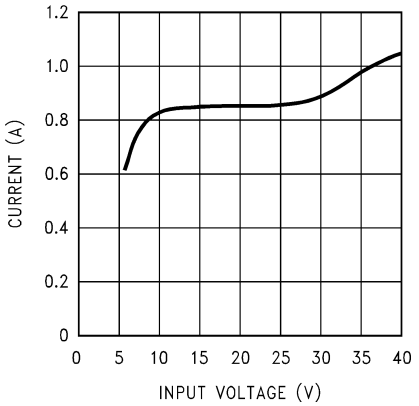

Figure 12. Peak Switch Current

Copyright © 1998–2016, Texas Instruments Incorporated

Typical Characteristics (continued)

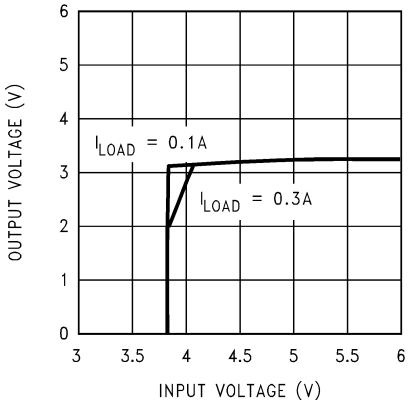

Figure 13. Dropout Voltage, 3.3-V Version

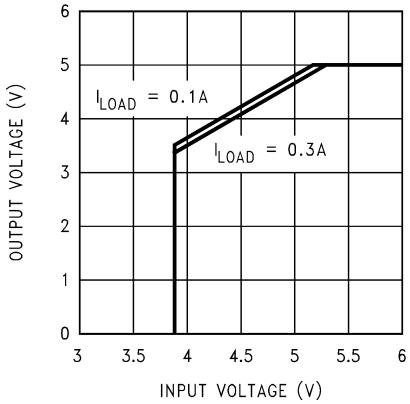

Figure 14. Dropout Voltage, 5-V Version

8 Detailed Description

8.1 Overview

The LM2674 SIMPLE SWITCHER® regulator is an easy-to-use non-synchronous step-down DC-DC converter with a wide input voltage range up to 40 V. It is capable of delivering up to 0.5-A DC load current with excellent line and load regulation. These devices are available in fixed output voltages of 3.3 V, 5 V, 12 V, and an adjustable output version. The family requires few external components and the pin arrangement was designed for simple, optimum PCB layout.

8.2 Functional Block Diagram

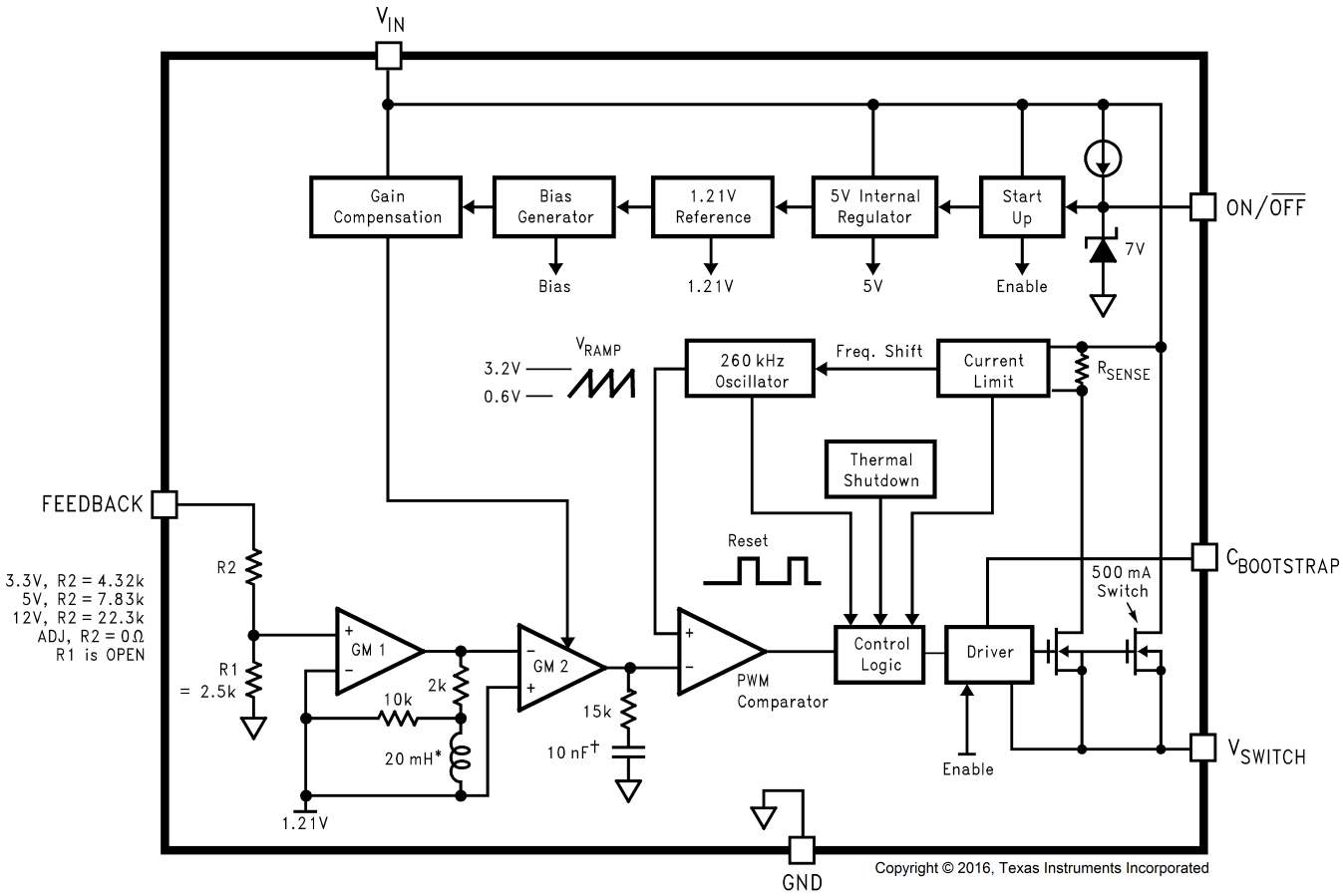

8.3 Feature Description

8.3.1 Adjustable Output Voltage

The voltage regulation loop in the LM2674 regulates output voltage by maintaining the voltage on FB pin (VFB) to be the same as the internal REF voltage (VREF). A resistor divider pair is required to program the ratio from output voltage VOUT to VFB. The resistor is connected from the VOUT of the LM2674 to ground with the mid-point connecting to the FB pin. The voltage reference system produces a precise voltage reference over temperature. The internal REF voltage is 1.21 V typically. To program the output voltage of the LM2674 to be a certain value VOUT, R1 can be calculated with a selected R2 (see *Adjustable Output Voltage Typical Application*). R2 is in the range from 10 kΩ to 100 kΩ is recommended for most applications. If the resistor

Copyright © 1998–2016, Texas Instruments Incorporated

Feature Description (continued)

divider is not connected properly, output voltage cannot be regulated because the feedback loop is broken. If the FB pin is shorted to ground, the output voltage is driven close to VIN, because the regulator sees very low voltage on the FB pin and tries to regulator it up. The load connected to the output could be damaged under such a condition. Do not short FB pin to ground when the LM2674 is enabled. It is important to route the feedback trace away from the noisy area of the PCB. For more layout recommendations, see *Layout*.

8.4 Device Functional Modes

8.4.1 Shutdown Mode

The ON/$\overline{\text{OFF}}$ pin provides electrical ON and OFF control for the LM2674. When the voltage of this pin is lower than 1.4 V, the device is in shutdown mode. The typical standby current in this mode is 50 μA.

8.4.2 Active Mode

When the voltage of the ON/OFF pin is higher than 1.4 V, the device starts switching and the output voltage rises until it reaches a normal regulation voltage.

9 Application and Implementation

NOTE

Information in the following applications sections is not part of the TI component specification, and TI does not warrant its accuracy or completeness. TI's customers are responsible for determining suitability of components for their purposes. Customers should validate and test their design implementation to confirm system functionality.

9.1 Application Information

The LM2674 is a step-down DC-DC regulator. It is typically used to convert a higher DC voltage to a lower DC voltage with a maximum output current of 0.5 A. The following design procedure can be used to select components for the LM2674. Alternately, the WEBENCH® software may be used to generate complete designs. When generating a design, the WEBENCH software uses iterative design procedure and accesses comprehensive databases of components. See ti.com for more details.

When the output voltage is greater than approximately 6 V, and the duty cycle at minimum input voltage is greater than approximately 50%, the designer must exercise caution in selection of the output filter components. When an application designed to these specific operating conditions is subjected to a current limit fault condition, it may be possible to observe a large hysteresis in the current limit. This can affect the output voltage of the device until the load current is reduced sufficiently to allow the current limit protection circuit to reset itself.

Under current limiting conditions, the LM267x is designed to respond in the following manner:

1. At the moment when the inductor current reaches the current limit threshold, the ON-pulse is immediately terminated. This happens for any application condition.
2. However, the current limit block is also designed to momentarily reduce the duty cycle to below 50% to avoid subharmonic oscillations, which could cause the inductor to saturate.
3. Thereafter, once the inductor current falls below the current limit threshold, there is a small relaxation time during which the duty cycle progressively rises back above 50% to the value required to achieve regulation.

If the output capacitance is sufficiently *large*, it may be possible that as the output tries to recover, the output capacitor charging current is large enough to repeatedly re-trigger the current limit circuit before the output has fully settled. This condition is exacerbated with higher output voltage settings because the energy requirement of the output capacitor varies as the square of the output voltage (½ CV2), thus requiring an increased charging current. A simple test to determine if this condition might exist for a suspect application is to apply a short circuit across the output of the converter, and then remove the shorted output condition. In an application with properly selected external components, the output recovers smoothly. Practical values of external components that have been experimentally found to work well under these specific operating conditions are C_{OUT} = 47 µF, L = 22 µH.

NOTE

Even with these components, for a device's current limit of ICLIM, the maximum load current under which the possibility of the large current limit hysteresis can be minimized is ICLIM/2.

For example, if the input is 24 V and the set output voltage is 18 V, then for a desired maximum current of 1.5 A, the current limit of the chosen switcher must be confirmed to be at least 3 A. Under extreme overcurrent or short-circuit conditions, the LM267X employs frequency foldback in addition to the current limit. If the cycle-by-cycle inductor current increases above the current limit threshold (due to short circuit or inductor saturation for example) the switching frequency is automatically reduced to protect the IC. Frequency below 100 kHz is typical for an extreme short-circuit condition.

Copyright © 1998–2016, Texas Instruments Incorporated

9.2 Typical Applications

9.2.1 Fixed Output Voltage Typical Application

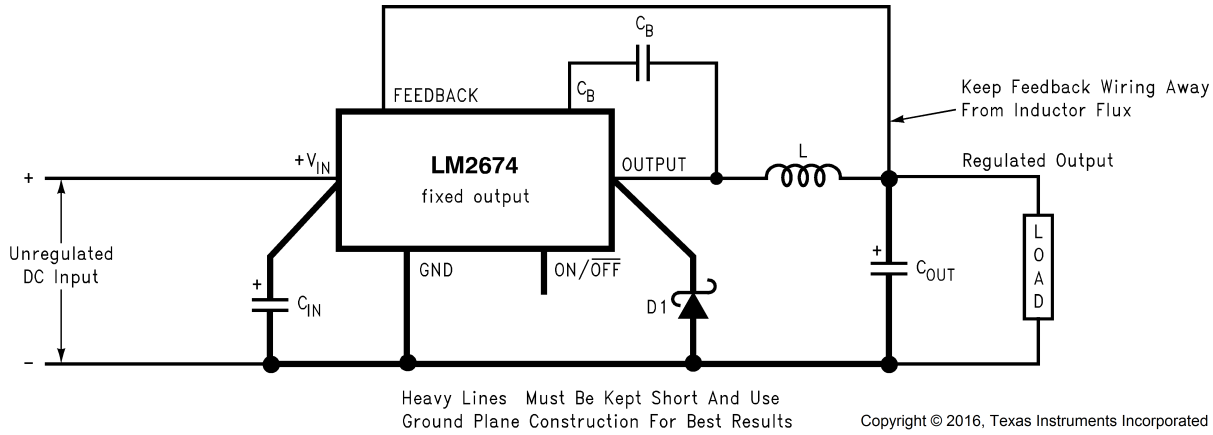

C_{IN} = 22-µF, 50-V Tantalum, Sprague *199D Series*
C_{OUT} = 47-µF, 25-V Tantalum, Sprague *595D Series*
D1 = 3.3-A, 50-V Schottky Rectifier, IR 30WQ05F
L1 = 68-µH Sumida #RCR110D-680L
C_B = 0.01-µF, 50-V Ceramic

Figure 15. Fixed Output Voltage Version

9.2.1.1 Design Requirements

Table 1 lists the design parameters of this example.

Table 1. Design Parameters

PARAMETER	VALUE
Regulated output voltage (3.3 V, 5 V, or 12 V), V_{OUT}	5 V
Maximum DC input voltage, V_{IN}(max)	12 V
Maximum load current, I_{LOAD}(max)	500 mA

9.2.1.2 Detailed Design Procedure

9.2.1.2.1 Inductor Selection (L1)

1. Select the correct inductor value selection guide from Figure 24, Figure 25, or Figure 26 (output voltages of 3.3 V, 5 V, or 12 V respectively). For all other voltages, see the design procedure for the adjustable version. Use the inductor selection guide for the 5-V version shown in Figure 25.
2. From the inductor value selection guide, identify the inductance region intersected by the maximum input voltage line and the maximum load current line. Each region is identified by an inductance value and an inductor code (LXX). From the inductor value selection guide shown in Figure 25, the inductance region intersected by the 12-V horizontal line and the 500-mA vertical line is 47 µH, and the inductor code is L13.
3. Select an appropriate inductor from the four manufacturer's part numbers listed in Table 7. Each manufacturer makes a different style of inductor to allow flexibility in meeting various design requirements. Listed below are some of the differentiating characteristics of each manufacturer's inductors:
   - *Schott:* ferrite EP core inductors; these have very low leakage magnetic fields to reduce electro-magnetic interference (EMI) and are the lowest power loss inductors
   - *Renco:* ferrite stick core inductors; benefits are typically lowest cost inductors and can withstand E•T and transient peak currents above rated value. Be aware that these inductors have an external magnetic field which may generate more EMI than other types of inductors.
   - *Pulse:* powered iron toroid core inductors; these can also be low cost and can withstand larger than normal E•T and transient peak currents. Toroid inductors have low EMI.
   - *Coilcraft:* ferrite drum core inductors; these are the smallest physical size inductors, available only as

SMT components. Be aware that these inductors also generate EMI—but less than stick inductors.

Complete specifications for these inductors are available from the respective manufacturers. The inductance value required is 47 μH. From Table 7, go to the L13 line and choose an inductor part number from any of the four manufacturers shown. (In most instances, both through hole and surface mount inductors are available).

9.2.1.2.2 Output Capacitor Selection (C_{OUT})

Select an output capacitor from the output capacitor Table 2. Using the output voltage and the inductance value found in the inductor selection guide, step 1, locate the appropriate capacitor value and voltage rating. Use the 5-V section in the output capacitor Table 2. Choose a capacitor value and voltage rating from the line that contains the inductance value of 47 μH. The capacitance and voltage rating values corresponding to the 47-μH inductor are the following:

- Surface mount
  - 68-μF, 10-V Sprague 594D series
  - 100-μF, 10-V AVX TPS series
- Through hole
  - 68-μF, 10-V Sanyo OS-CON SA series
  - 150-μF, 35-V Sanyo MV-GX series
  - 150-μF, 35-V Nichicon PL series
  - 150-μF, 35-V Panasonic HFQ series

The capacitor list contains through-hole electrolytic capacitors from four different capacitor manufacturers and surface-mount tantalum capacitors from two different capacitor manufacturers. TI recommends that both the manufacturers and the manufacturer's series that are listed in the table be used.

Table 2. Output Capacitor Table

OUTPUT VOLTAGE (V)	INDUCTANCE (μH)	OUTPUT CAPACITOR					
		SURFACE MOUNT		THROUGH HOLE			
		SPRAGUE 594D SERIES (μF/V)	AVX TPS SERIES (μF/V)	SANYO OS-CON SA SERIES (μF/V)	SANYO MV-GX SERIES (μF/V)	NICHICON PL SERIES (μF/V)	PANASONIC HFQ SERIES (μF/V)
3.3	22	120/6.3	100/10	100/10	330/35	330/35	330/35
	33	120/6.3	100/10	68/10	220/35	220/35	220/35
	47	68/10	100/10	68/10	150/35	150/35	150/35
	68	120/6.3	100/10	100/10	120/35	120/35	120/35
	100	120/6.3	100/10	100/10	120/35	120/35	120/35
	150	120/6.3	100/10	100/10	120/35	120/35	120/35
5	22	100/16	100/10	100/10	330/35	330/35	330/35
	33	68/10	10010	68/10	220/35	220/35	220/35
	47	68/10	100/10	68/10	150/35	150/35	150/35
	68	100/16	100/10	100/10	120/35	120/35	120/35
	100	100/16	100/10	100/10	120/35	120/35	120/35
	150	100/16	100/10	100/10	120/35	120/35	120/35
12	22	120/20	(2×) 68/20	68/20	330/35	330/35	330/35
	33	68/25	68/20	68/20	220/35	220/35	220/35
	47	47/20	68/20	47/20	150/35	150/35	150/35
	68	47/20	68/20	47/20	120/35	120/35	120/35
	100	47/20	68/20	47/20	120/35	120/35	120/35
	150	47/20	68/20	47/20	120/35	120/35	120/35
	220	47/20	68/20	47/20	120/35	120/35	120/35

Copyright © 1998–2016, Texas Instruments Incorporated

9.2.1.2.3 Catch Diode Selection (D1)

1. In normal operation, the average current of the catch diode is the load current times the catch diode duty cycle, 1-D (D is the switch duty cycle, which is approximately the output voltage divided by the input voltage). The largest value of the catch diode average current occurs at the maximum load current and maximum input voltage (minimum D). For normal operation, the catch diode current rating must be at least 1.3 times greater than its maximum average current. However, if the power supply design must withstand a continuous output short, the diode must have a current rating equal to the maximum current limit of the LM2674. The most stressful condition for this diode is a shorted output condition. Refer to Table 3. In this example, a 1-A, 20-V Schottky diode provides the best performance. If the circuit must withstand a continuous shorted output, a higher current Schottky diode is recommended.

Table 3. Schottky Diode Selection Table

V_R	500-mA DIODES		3-A DIODES	
	SURFACE MOUNT	THROUGH-HOLE	SURFACE MOUNT	THROUGH-HOLE
20V	SK12	1N5817	SK32	1N5820
	B120	SR102		SR302
30V	SK13	1N5818	SK33	1N5821
	B130	11DQ03	30WQ03F	31DQ03
	MBRS130	SR103		
40V	SK14	1N5819	SK34	1N5822
	B140	11DQ04	30BQ040	MBR340
	MBRS140	SR104	30WQ04F	31DQ04
	10BQ040		MBRS340	SR304
	10MQ040		MBRD340	
	15MQ040			
50V	SK15	MBR150	SK35	MBR350
	B150	11DQ05	30WQ05F	31DQ05
	10BQ050	SR105		SR305

2. The reverse voltage rating of the diode must be at least 1.25 times the maximum input voltage.
3. Because of their fast switching speed and low forward voltage drop, Schottky diodes provide the best performance and efficiency. This Schottky diode must be placed close to the LM2674 using short leads and short printed-circuit traces.

9.2.1.2.4 Input Capacitor (C_{IN})

A low ESR aluminum or tantalum bypass capacitor is required between the input pin and ground to prevent large voltage transients from appearing at the input. This capacitor must be placed close to the IC using short leads. In addition, the RMS current rating of the input capacitor must be selected to be at least ½ the DC load current. The capacitor manufacturer data sheet must be checked to assure that this current rating is not exceeded. The curves shown in Figure 16 show typical RMS current ratings for several different aluminum electrolytic capacitor values. A parallel connection of two or more capacitors may be required to increase the total minimum RMS current rating to suit the application requirements.

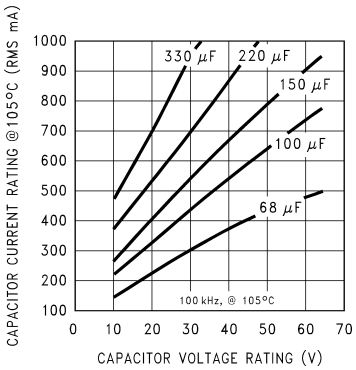

Figure 16. RMS Current Ratings for Low ESR Electrolytic Capacitors (Typical)

For an aluminum electrolytic capacitor, the voltage rating must be at least 1.25 times the maximum input voltage. Caution must be exercised if solid tantalum capacitors are used. The tantalum capacitor voltage rating must be twice the maximum input voltage. Table 4 and Table 5 show the recommended application voltage for AVX TPS and Sprague 594D tantalum capacitors. TI recommends that they be surge current tested by the manufacturer. The TPS series available from AVX, and the 593D and 594D series from Sprague are all surge current tested. Another approach to minimize the surge current stresses on the input capacitor is to add a small inductor in series with the input supply line.

Table 4. AVX TPS(1)

RECOMMENDED APPLICATION VOLTAGE	VOLTAGE RATING
85°C RATING	
3.3	6.3
5	10
10	20
12	25
15	35

(1) Recommended Application Voltage for AVX TPS and Sprague 594D Tantalum Chip Capacitors Derated for 85°C

Table 5. Sprague 594D(1)

RECOMMENDED APPLICATION VOLTAGE	VOLTAGE RATING
85°C RATING	
2.5	4
3.3	6.3
5	10
8	16
12	20
18	25
24	35
29	50

(1) Recommended Application Voltage for AVX TPS and Sprague 594D Tantalum Chip Capacitors Derated for 85°C

Copyright © 1998–2016, Texas Instruments Incorporated

Use caution when using only ceramic capacitors for input bypassing, because it may cause severe ringing at the V_{IN} pin. The important parameters for the input capacitor are the input voltage rating and the RMS current rating. With a maximum input voltage of 12 V, an aluminum electrolytic capacitor with a voltage rating greater than 15 V (1.25 × V_{IN}) is required. The next higher capacitor voltage rating is 16 V.

The RMS current rating requirement for the input capacitor in a buck regulator is approximately ½ the DC load current. In this example, with a 500-mA load, a capacitor with an RMS current rating of at least 250 mA is required. The curves shown in Figure 16 can be used to select an appropriate input capacitor. From the curves, locate the 16-V line and note which capacitor values have RMS current ratings greater than 250 mA.

For a through-hole design, a 100-µF, 16-V electrolytic capacitor (Panasonic HFQ series, Nichicon PL, Sanyo MV-GX series or equivalent) would be adequate. Other types or other manufacturers' capacitors can be used provided the RMS ripple current ratings are adequate. Additionally, for a complete surface mount design, electrolytic capacitors such as the Sanyo CV-C or CV-BS and the Nichicon WF or UR and the NIC Components NACZ series could be considered.

For surface mount designs, solid tantalum capacitors can be used, but caution must be exercised with regard to the capacitor surge current rating and voltage rating. In this example, checking Table 4, and the Sprague 594D series datasheet, a Sprague 594D 15-µF, 25-V capacitor is adequate.

9.2.1.2.5 Boost Capacitor (C_B)

This capacitor develops the necessary voltage to turn the switch gate on fully. All applications must use a 0.01-µF, 50-V ceramic capacitor. For this application, and all applications, use a 0.01-µF, 50-V ceramic capacitor.

9.2.1.3 Application Curves

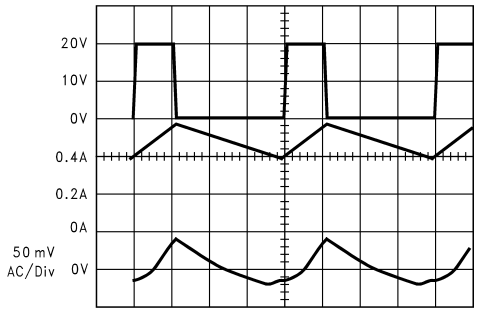

Continuous mode switching waveforms V_{IN} = 20 V, V_{OUT} = 5 V, I_{LOAD} = 500 mA L = 100 µH, C_{OUT} = 100 µF, C_{OUT}ESR = 0.1 Ω
A: V_{SW} pin voltage = 10 V/div
B: Inductor current = 0.2 A/div
C: Output ripple voltage = 50 mV/div ac-coupled

Figure 17. Horizontal Time Base: 1 µs/div

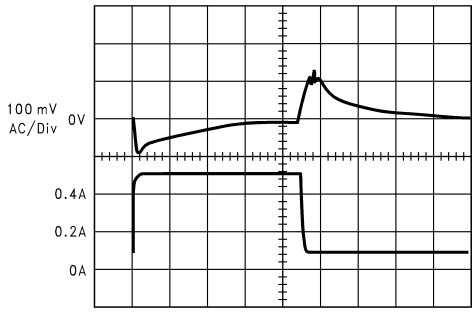

Load transient response for continuous mode V_{IN} = 20 V, V_{OUT} = 5 V, L = 100 µH, C_{OUT} = 100 µF, C_{OUT}ESR = 0.1 Ω
A: Output voltage = 100 mV/div, ac-coupled
B: Load current = 100-mA to 500-mA load pulse

Figure 18. Horizontal Time Base: 50 µs/div

9.2.2 Adjustable Output Voltage Typical Application

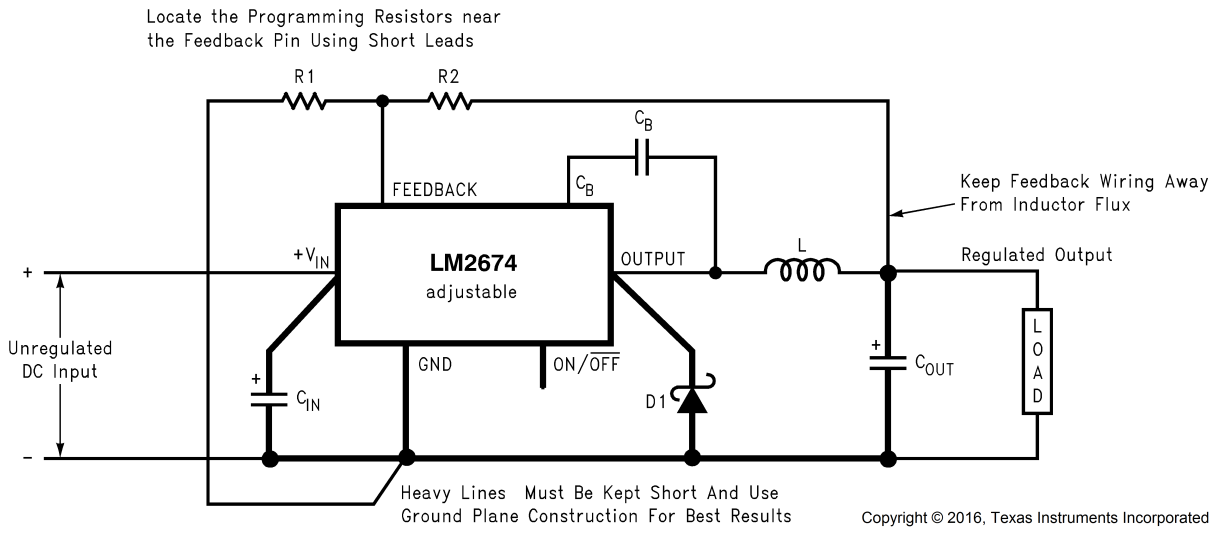

C_{IN} = 22-µF, 50-V Tantalum, Sprague *199D Series*
C_{OUT} = 47-µF, 25-V Tantalum, Sprague *595D Series*
D1 = 3.3-A, 50-V Schottky Rectifier, IR 30WQ05F
L1 = 68-µH Sumida #RCR110D-680L
R1 = 1.5 kΩ, 1%
C_B = 0.01-µF, 50-V Ceramic
For a 5-V output, select R2 to be 4.75 kΩ, 1%

$$V_{OUT} = V_{REF}\left(1 + \frac{R_2}{R_1}\right)$$

where V_{REF} = 1.21 V

$$R_2 = R_1\left(\frac{V_{OUT}}{V_{REF}} - 1\right)$$

Use a 1% resistor for best stability.

Figure 19. Adjustable Output Voltage Version

9.2.2.1 Design Requirements

Table 6 lists the design parameters of this example.

Table 6. Design Parameters

PARAMETER	VALUE
Regulated output voltage, V_{OUT}	20
Maximum input voltage, V_{IN}(max)	28
Maximum load current, I_{LOAD}(max)	500
Switching frequency, F	Fixed at a nominal 260 kHz

9.2.2.2 Detailed Design Procedure

9.2.2.2.1 Programming Output Voltage

Select R_1 and R_2, as shown in Figure 19.

Use the following formula to select the appropriate resistor values.

$$V_{OUT} = V_{REF}\left(1 + \frac{R_2}{R_1}\right)$$

where

- V_{REF} = 1.21 V (1)

Select a value for R_1 between 240 Ω and 1.5 kΩ. The lower resistor values minimize noise pickup in the sensitive feedback pin. (For the lowest temperature coefficient and the best stability with time, use 1% metal film resistors.)

Copyright © 1998–2016, Texas Instruments Incorporated

$$R_2 = R_1 \left(\frac{V_{OUT}}{V_{REF}} - 1 \right) \tag{2}$$

Select R_1 to be 1 kΩ, 1%. Solve for R_2.

$$R_2 = R_1 \left(\frac{V_{OUT}}{V_{REF}} - 1 \right) = 1\ k\Omega \left(\frac{20V}{1.23V} - 1 \right)$$

where

- R_2 = 1k (16.53 − 1) = 15.53 kΩ, closest 1% value is 15.4 kΩ
  R_2 = 15.4 kΩ (3)

9.2.2.2.2 Inductor Selection (L1)

1. Calculate the inductor Volt • microsecond constant E • T (V • µs) from Equation 4.

$$E \cdot T = (V_{IN(MAX)} - V_{OUT} - V_{SAT}) \cdot \frac{V_{OUT} + V_D}{V_{IN(MAX)} - V_{SAT} + V_D} \cdot \frac{1000}{260}\ (V \cdot \mu s)$$

where

- V_{SAT} = internal switch saturation voltage = 0.25 V
- V_D = diode forward voltage drop = 0.5 V (4)

Calculate the inductor Volt • microsecond constant (E • T) with Equation 5.

$$E \cdot T = (28 - 20 - 0.25) \cdot \frac{20 + 0.5}{28 - 0.25 + 0.5} \cdot \frac{1000}{260}\ (V \cdot \mu s)$$

$$E \cdot T = (7.75) \cdot \frac{20.5}{28.25} \cdot 3.85\ (V \cdot \mu s) = 21.6\ (V \cdot \mu s) \tag{5}$$

2. Use the E • T value from the previous formula and match it with the E • T number on the vertical axis of the inductor value selection guide shown in Figure 27.

   E • T = 21.6 (V • µs)

3. On the horizontal axis, select the maximum load current.

   I_{LOAD}(max) = 500 mA

4. Identify the inductance region intersected by the E • T value and the maximum load current value. Each region is identified by an inductance value and an inductor code (LXX).

   From the inductor value selection guide shown in Figure 27, the inductance region intersected by the 21.6 (V • µs) horizontal line and the 500-mA vertical line is 100 µH, and the inductor code is L20.

5. Select an appropriate inductor from the four manufacturer's part numbers listed in Table 7. For information on the different types of inductors, see the inductor selection in the fixed output voltage design procedure.

   From Table 7, locate line L20, and select an inductor part number from the list of manufacturers' part numbers.

Table 7. Inductor Manufacturers' Part Numbers

IND. REF. DESG.	INDUCTANCE (µH)	CURRENT (A)	SCHOTT		RENCO		PULSE ENGINEERING		COILCRAFT
			THROUGH HOLE	SURFACE MOUNT	THROUGH HOLE	SURFACE MOUNT	THROUGH HOLE	SURFACE MOUNT	SURFACE MOUNT
L2	150	0.21	67143920	67144290	RL-5470-4	RL1500-150	PE-53802	PE-53802-S	DO1608-154
L3	100	0.26	67143930	67144300	RL-5470-5	RL1500-100	PE-53803	PE-53803-S	DO1608-104
L4	68	0.32	67143940	67144310	RL-1284-68-43	RL1500-68	PE-53804	PE-53804-S	DO1608-683
L5	47	0.37	67148310	67148420	RL-1284-47-43	RL1500-47	PE-53805	PE-53805-S	DO1608-473
L6	33	0.44	67148320	67148430	RL-1284-33-43	RL1500-33	PE-53806	PE-53806-S	DO1608-333
L7	22	0.52	67148330	67148440	RL-1284-22-43	RL1500-22	PE-53807	PE-53807-S	DO1608-223
L9	220	0.32	67143960	67144330	RL-5470-3	RL1500-220	PE-53809	PE-53809-S	DO3308-224
L10	150	0.39	67143970	67144340	RL-5470-4	RL1500-150	PE-53810	PE-53810-S	DO3308-154
L11	100	0.48	67143980	67144350	RL-5470-5	RL1500-100	PE-53811	PE-53811-S	DO3308-104
L12	68	0.58	67143990	67144360	RL-5470-6	RL1500-68	PE-53812	PE-53812-S	DO3308-683
L13	47	0.7	67144000	67144380	RL-5470-7	RL1500-47	PE-53813	PE-53813-S	DO3308-473
L14	33	0.83	67148340	67148450	RL-1284-33-43	RL1500-33	PE-53814	PE-53814-S	DO3308-333

Copyright © 1998–2016, Texas Instruments Incorporated

Table 7. Inductor Manufacturers' Part Numbers (continued)

IND. REF. DESG.	INDUCTANCE (μH)	CURRENT (A)	SCHOTT		RENCO		PULSE ENGINEERING		COILCRAFT
			THROUGH HOLE	SURFACE MOUNT	THROUGH HOLE	SURFACE MOUNT	THROUGH HOLE	SURFACE MOUNT	SURFACE MOUNT
L15	22	0.99	67148350	67148460	RL-1284-22-43	RL1500-22	PE-53815	PE-53815-S	DO3308-223
L18	220	0.55	67144040	67144420	RL-5471-2	RL1500-220	PE-53818	PE-53818-S	DO3316-224
L19	150	0.66	67144050	67144430	RL-5471-3	RL1500-150	PE-53819	PE-53819-S	DO3316-154
L20	100	0.82	67144060	67144440	RL-5471-4	RL1500-100	PE-53820	PE-53820-S	DO3316-104
L21	68	0.99	67144070	67144450	RL-5471-5	RL1500-68	PE-53821	PE-53821-S	DO3316-683

9.2.2.2.3 Output Capacitor Selection (C_{OUT})

1. Select an output capacitor from the capacitor code selection guide in Table 8. Using the inductance value found in the inductor selection guide, step 1, locate the appropriate capacitor code corresponding to the desired output voltage. Use the appropriate row of the capacitor code selection guide, in Table 8. For this example, use the 15-V to 20-V row. The capacitor code corresponding to an inductance of 100 μH is C20.
2. Select an appropriate capacitor value and voltage rating, using the capacitor code, from the output capacitor selection in Table 9. There are two solid tantalum (surface-mount) capacitor manufacturers and four electrolytic (through-hole) capacitor manufacturers to choose from. TI recommends that both the manufacturers and the manufacturer's series that are listed in the table be used. From the output capacitor selection in Table 9, choose a capacitor value (and voltage rating) that intersects the capacitor code(s) selected in section A, C20.

   The capacitance and voltage rating values corresponding to the capacitor code C20 are the following:
   - Surface mount
     - 33-μF, 25-V Sprague 594D series
     - 33-μF, 25-V AVX TPS series
   - Through hole
     - 33-μF, 25-V Sanyo OS-CON SC series
     - 120-μF, 35-V Sanyo MV-GX series
     - 120-μF, 35-V Nichicon PL series
     - 20-μF, 35-V Panasonic HFQ series

Other manufacturers or other types of capacitors may also be used, provided the capacitor specifications (especially the 100-kHz ESR) closely match the characteristics of the capacitors listed in the output capacitor table. Refer to the capacitor manufacturers' data sheet for this information.

Table 8. Capacitor Code Selection Guide

CASE STYLE(1)	OUTPUT VOLTAGE (V)	INDUCTANCE (μH)						
		22	33	47	68	100	150	220
SM and TH	1.21–2.5	—	—	—	—	C1	C2	C3
SM and TH	2.5–3.75	—	—	—	C1	C2	C3	C3
SM and TH	3.75–5	—	—	C4	C5	C6	C6	C6
SM and TH	5–6.25	—	C4	C7	C6	C6	C6	C6
SM and TH	6.25–7.5	C8	C4	C7	C6	C6	C6	C6
SM and TH	7.5–10	C9	C10	C11	C12	C13	C13	C13
SM and TH	10–12.5	C14	C11	C12	C12	C13	C13	C13
SM and TH	12.5–15	C15	C16	C17	C17	C17	C17	C17
SM and TH	15–20	C18	C19	C20	C20	C20	C20	C20
SM and TH	20–30	C21	C22	C22	C22	C22	C22	C22
TH	30–37	C23	C24	C24	C25	C25	C25	C25

(1) SM = Surface mount and TH = Through hole

Copyright © 1998–2016, Texas Instruments Incorporated

Table 9. Output Capacitor Selection Table

OUTPUT CAPACITOR						
CAP. REF. DESG. #	SURFACE MOUNT		THROUGH HOLE			
	SPRAGUE 594D SERIES (μF/V)	AVX TPS SERIES (μF/V)	SANYO OS-CON SA SERIES (μF/V)	SANYO MV-GX SERIES (μF/V)	NICHICON PL SERIES (μF/V)	PANASONIC HFQ SERIES (μF/V)
C1	120/6.3	100/10	100/10	220/35	220/35	220/35
C2	120/6.3	100/10	100/10	150/35	150/35	150/35
C3	120/6.3	100/10	100/35	120/35	120/35	120/35
C4	68/10	100/10	68/10	220/35	220/35	220/35
C5	100/16	100/10	100/10	150/35	150/35	150/35
C6	100/16	100/10	100/10	120/35	120/35	120/35
C7	68/10	100/10	68/10	150/35	150/35	150/35
C8	100/16	100/10	100/10	330/35	330/35	330/35
C9	100/16	100/16	100/16	330/35	330/35	330/35
C10	100/16	100/16	68/16	220/35	220/35	220/35
C11	100/16	100/16	68/16	150/35	150/35	150/35
C12	100/16	100/16	68/16	120/35	120/35	120/35
C13	100/16	100/16	100/16	120/35	120/35	120/35
C14	100/16	100/16	100/16	220/35	220/35	220/35
C15	47/20	68/20	47/20	220/35	220/35	220/35
C16	47/20	68/20	47/20	150/35	150/35	150/35
C17	47/20	68/20	47/20	120/35	120/35	120/35
C18	68/25	(2×) 33/25	47/(1)	220/35	220/35	220/35
C19	33/25	33/25	33/25(1)	150/35	150/35	150/35
C20	33/25	33/25	33/25(1)	120/35	120/35	120/35
C21	33/35	(2×) 22/25	See(2)	150/35	150/35	150/35
C22	33/35	22/35	See(2)	120/35	120/35	120/35
C23	See(2)	See(2)	See(2)	220/50	100/50	120/50
C24	See(2)	See(2)	See(2)	150/50	100/50	120/50
C25	See(2)	See(2)	See(2)	150/50	82/50	82/50

(1) The SC series of Os-Con capacitors (others are SA series)
(2) The voltage ratings of the surface mount tantalum chip and Os-Con capacitors are too low to work at these voltages.

9.2.2.2.4 Catch Diode Selection (D1)

1. In normal operation, the average current of the catch diode is the load current times the catch diode duty cycle, 1-D (D is the switch duty cycle, which is approximately V_{OUT}/V_{IN}). The largest value of the catch diode average current occurs at the maximum input voltage (minimum D). For normal operation, the catch diode current rating must be at least 1.3 times greater than its maximum average current. However, if the power supply design must withstand a continuous output short, the diode must have a current rating greater than the maximum current limit of the LM2674. The most stressful condition for this diode is a shorted output condition. Schottky diodes provide the best performance, and in this example a 500-mA, 40-V Schottky diode would be a good choice. If the circuit must withstand a continuous shorted output, a higher current (at least 1.2 A) Schottky diode is recommended.
2. The reverse voltage rating of the diode must be at least 1.25 times the maximum input voltage.
3. Because of their fast switching speed and low forward voltage drop, Schottky diodes provide the best performance and efficiency. The Schottky diode must be placed close to the LM2674 using short leads and short printed-circuit traces.

9.2.2.2.5 Input Capacitor (C_{IN})

A low ESR aluminum or tantalum bypass capacitor is required between the input pin and ground to prevent large voltage transients from appearing at the input. This capacitor must be placed close to the IC using short leads. In addition, the RMS current rating of the input capacitor must be selected to be at least ½ the DC load current. The capacitor manufacturer data sheet must be checked to assure that this current rating is not exceeded. The curves shown in Figure 16 show typical RMS current ratings for several different aluminum electrolytic capacitor values. A parallel connection of two or more capacitors may be required to increase the total minimum RMS current rating to suit the application requirements.

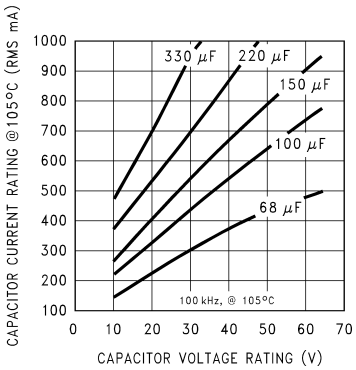

Figure 20. RMS Current Ratings for Low ESR Electrolytic Capacitors (Typical)

For an aluminum electrolytic capacitor, the voltage rating must be at least 1.25 times the maximum input voltage. Caution must be exercised if solid tantalum capacitors are used. The tantalum capacitor voltage rating must be twice the maximum input voltage. Table 10 and Table 5 show the recommended application voltage for AVX TPS and Sprague 594D tantalum capacitors. TI also recommends that they be surge current tested by the manufacturer. The TPS series available from AVX, and the 593D and 594D series from Sprague are all surge current tested. Another approach to minimize the surge current stresses on the input capacitor is to add a small inductor in series with the input supply line.

Table 10. AVX TPS(1)

RECOMMENDED APPLICATION VOLTAGE	VOLTAGE RATING
85°C RATING	
3.3	6.3
5	10
10	20
12	25
15	35

(1) Recommended Application Voltage for AVX TPS and Sprague 594D Tantalum Chip Capacitors Derated for 85°C

Table 11. Sprague 594D(1)

RECOMMENDED APPLICATION VOLTAGE	VOLTAGE RATING
85°C RATING	
2.5	4
3.3	6.3
5	10
8	16
12	20

(1) Recommended Application Voltage for AVX TPS and Sprague 594D Tantalum Chip Capacitors Derated for 85°C

Copyright © 1998–2016, Texas Instruments Incorporated

Table 11. Sprague 594D(1) (continued)

RECOMMENDED APPLICATION VOLTAGE	VOLTAGE RATING
85°C RATING	
18	25
24	35
29	50

Use caution when using only ceramic capacitors for input bypassing, because it may cause severe ringing at the V_{IN} pin. The important parameters for the input capacitor are the input voltage rating and the RMS current rating. With a maximum input voltage of 28 V, an aluminum electrolytic capacitor with a voltage rating of at least 35 V (1.25 × V_{IN}) is required.

The RMS current rating requirement for the input capacitor in a buck regulator is approximately ½ the DC load current. In this example, with a 500-mA load, a capacitor with an RMS current rating of at least 250 mA is required. The curves shown in Figure 16 can be used to select an appropriate input capacitor. From the curves, locate the 35-V line and note which capacitor values have RMS current ratings greater than 250 mA.

For a through-hole design, a 68-µF, 35-V electrolytic capacitor (Panasonic HFQ series, Nichicon PL, Sanyo MV-GX series or equivalent) would be adequate. Other types or other manufacturers' capacitors can be used provided the RMS ripple current ratings are adequate. Additionally, for a complete surface mount design, electrolytic capacitors such as the Sanyo CV-C or CV-BS, and the Nichicon WF or UR and the NIC Components NACZ series could be considered.

For surface mount designs, solid tantalum capacitors can be used, but caution must be exercised with regard to the capacitor surge current rating and voltage rating. In this example, checking note 1 of Table 5, and the Sprague 594D series datasheet, a Sprague 594D 15-µF, 50-V capacitor is adequate.

9.2.2.2.6 Boost Capacitor (C_B)

This capacitor develops the necessary voltage to turn the switch gate on fully. All applications must use a 0.01-µF, 50-V ceramic capacitor. For this application, and all applications, use a 0.01-µF, 50-V ceramic capacitor.

9.2.2.3 Application Curves

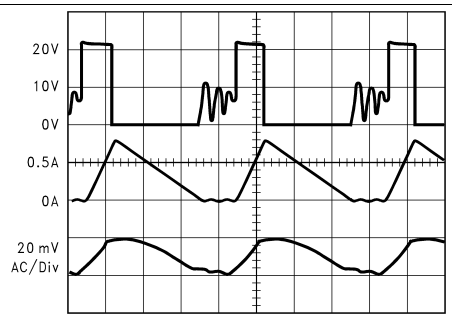

Discontinuous mode switching waveforms
V_{IN} = 20 V, V_{OUT} = 5 V, I_{LOAD} = 300 mA, L = 15 µH,
C_{OUT} = 68 µF (2×), C_{OUT}ESR = 25 mΩ
A: V_{SW} pin voltage = 10 V/div
B: Inductor current = 0.5 A/div
C: Output ripple voltage = 20 mV/div ac-coupled

Figure 21. Horizontal Time Base: 1 µs/div

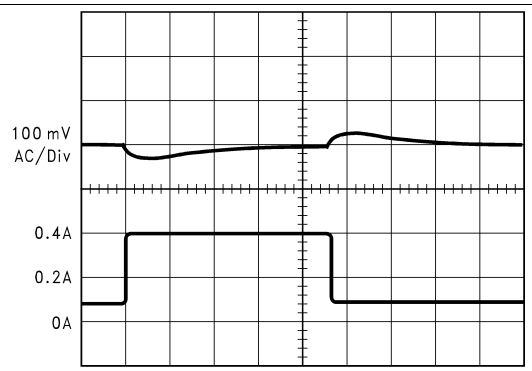

Load transient response for discontinuous mode V_{IN} = 20 V,
V_{OUT} = 5 V, L = 47 µH, C_{OUT} = 68 µF, C_{OUT}ESR = 50 mΩ
A: Output voltage = 100 mV/div, ac-coupled
B: Load current = 100-mA to 400-mA load pulse

Figure 22. Horizontal Time Base: 200 µs/div

9.2.3 Typical Application for All Output Voltage Versions

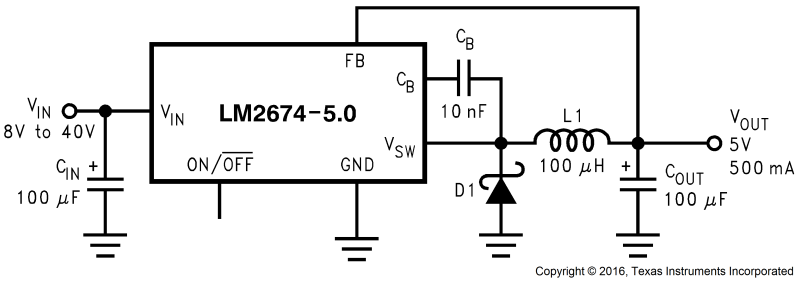

Figure 23. Typical Application

9.2.3.1 Application Curves

for continuous mode operation

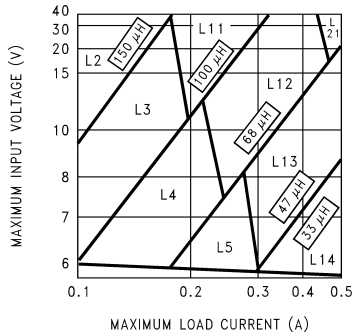

Figure 24. LM2674, 3.3-V Version

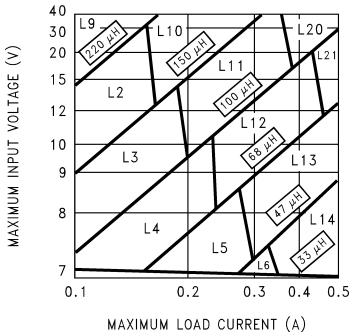

Figure 25. LM2674, 5-V Version

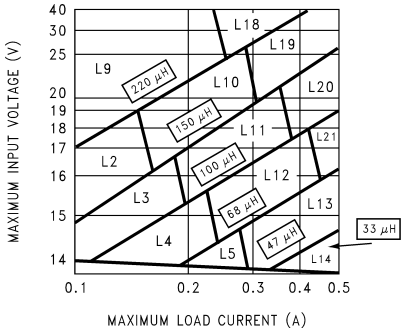

Figure 26. LM2674, 12-V Version

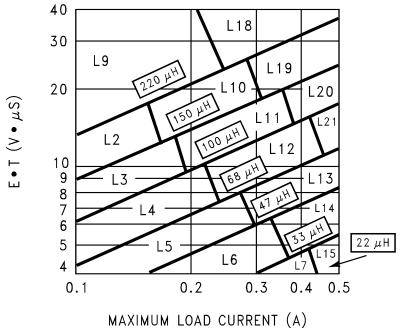

Figure 27. LM2674, Adjustable Version

10 Power Supply Recommendations

The LM2674 is designed to operate from an input voltage supply up to 40 V. This input supply must be well regulated and able to withstand maximum input current and maintain a stable voltage.

Copyright © 1998–2016, Texas Instruments Incorporated

11 Layout

11.1 Layout Guidelines

Layout is very important in switching regulator designs. Rapidly switching currents associated with wiring inductance can generate voltage transients which can cause problems. For minimal inductance and ground loops, the wires indicated by heavy lines (in Figure 15 and Figure 19) must be wide printed-circuit traces and must be kept as short as possible. For best results, external components must be placed as close to the switcher IC as possible using ground plane construction or single point grounding.

If open core inductors are used, take special care as to the location and positioning of this type of inductor. Allowing the inductor flux to intersect sensitive feedback, IC ground path, and C_{OUT} wiring can cause problems.

When using the adjustable version, take special care as to the location of the feedback resistors and the associated wiring. Physically place both resistors near the IC, and route the wiring away from the inductor, especially an open core type of inductor.

11.1.1 WSON Package Devices

The LM2674 is offered in the 16-pin WSON surface mount package to allow for increased power dissipation compared to the 8-pin SOIC and PDIP.

The die attach pad (DAP) must be connected to PCB ground plane. For CAD and assembly guidelines refer to *AN-1187 Leadless Leadfram Package (LLP)*.

11.2 Layout Examples

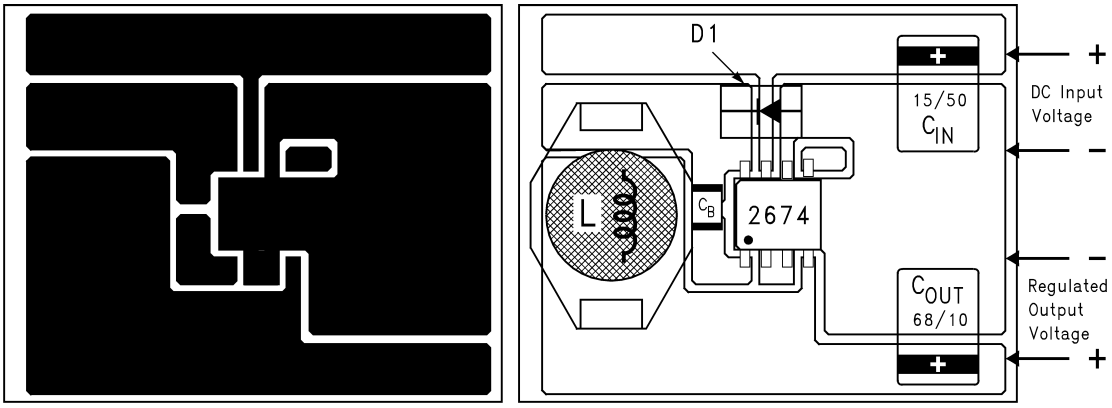

C_{IN} = 15-µF, 25-V, Solid Tantalum Sprague *594D series*
C_{OUT} = 68-µF, 10-V, Solid Tantalum Sprague *594D series*
D1 = 1-A, 40-V Schottky Rectifier, Surface Mount
L1 = 47-µH, L13, Coilcraft DO3308
C_B = 0.01-µF, 50-V Ceramic

Figure 28. Typical Surface-Mount PCB Layout, Fixed Output (4x Size)

Layout Examples (continued)

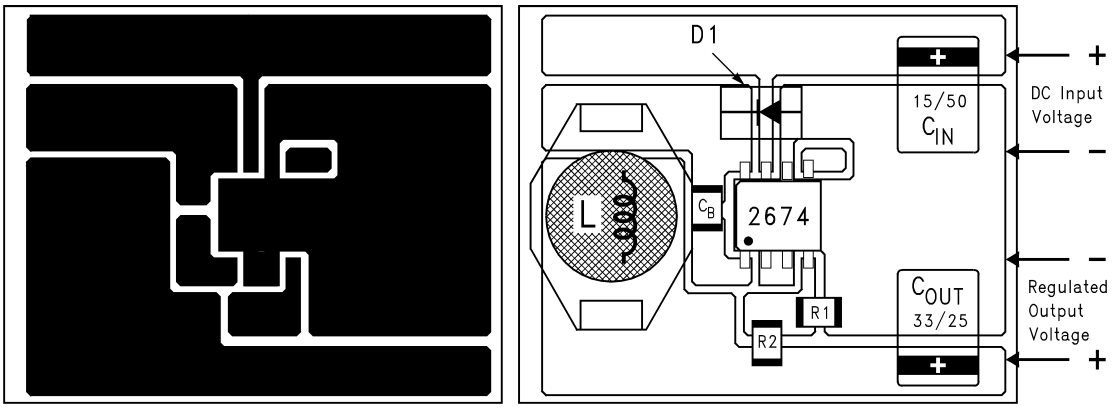

C_{IN} = 15-µF, 50-V, Solid Tantalum Sprague *594D series*
C_{OUT} = 33-µF, 25-V, Solid Tantalum Sprague *594D series*
D1 = 1-A, 40-V Schottky Rectifier, Surface Mount
L1 = 100-µH, L20, Coilcraft DO3316
C_B = 0.01-µF, 50-V Ceramic
R1 = 1k, 1%
R2 = Use formula in *Detailed Design Procedure*

Figure 29. Typical Surface-Mount PCB Layout, Adjustable Output (4x Size)

Copyright © 1998–2016, Texas Instruments Incorporated

12 Device and Documentation Support

12.1 Documentation Support

12.1.1 Related Documentation

For related documentation see the following:

AN-1187 Leadless Leadfram Package (LLP)

12.2 Receiving Notification of Documentation Updates

To receive notification of documentation updates, navigate to the device product folder on ti.com. In the upper right corner, click on *Alert me* to register and receive a weekly digest of any product information that has changed. For change details, review the revision history included in any revised document.

12.3 Community Resources

The following links connect to TI community resources. Linked contents are provided "AS IS" by the respective contributors. They do not constitute TI specifications and do not necessarily reflect TI's views; see TI's Terms of Use.

TI E2E™ Online Community ***TI's Engineer-to-Engineer (E2E) Community.*** Created to foster collaboration among engineers. At e2e.ti.com, you can ask questions, share knowledge, explore ideas and help solve problems with fellow engineers.

Design Support ***TI's Design Support*** Quickly find helpful E2E forums along with design support tools and contact information for technical support.

12.4 Trademarks

E2E is a trademark of Texas Instruments.
SIMPLE SWITCHER, WEBENCH are registered trademarks of Texas Instruments.
All other trademarks are the property of their respective owners.

12.5 Electrostatic Discharge Caution

These devices have limited built-in ESD protection. The leads should be shorted together or the device placed in conductive foam during storage or handling to prevent electrostatic damage to the MOS gates.

12.6 Glossary

SLYZ022 — *TI Glossary*.

This glossary lists and explains terms, acronyms, and definitions.

13 Mechanical, Packaging, and Orderable Information

The following pages include mechanical, packaging, and orderable information. This information is the most current data available for the designated devices. This data is subject to change without notice and revision of this document. For browser-based versions of this data sheet, refer to the left-hand navigation.

PACKAGING INFORMATION

Orderable Device	Status (1)	Package Type	Package Drawing	Pins	Package Qty	Eco Plan (2)	Lead/Ball Finish (6)	MSL Peak Temp (3)	Op Temp (°C)	Device Marking (4/5)	Samples
LM2674LD-ADJ/NOPB	ACTIVE	WSON	NHN	16	1000	Green (RoHS & no Sb/Br)	CU SN	Level-3-260C-168 HR	-40 to 125	S000CB	Samples
LM2674LDX-5.0/NOPB	ACTIVE	WSON	NHN	16	4500	Green (RoHS & no Sb/Br)	CU SN	Level-3-260C-168 HR	-40 to 125	S000BB	Samples
LM2674M-12	NRND	SOIC	D	8	95	TBD	Call TI	Call TI	-40 to 125	2674 M-12	
LM2674M-12/NOPB	ACTIVE	SOIC	D	8	95	Green (RoHS & no Sb/Br)	CU SN | Call TI	Level-1-260C-UNLIM	-40 to 125	2674 M-12	Samples
LM2674M-3.3/NOPB	ACTIVE	SOIC	D	8	95	Green (RoHS & no Sb/Br)	CU SN | Call TI	Level-1-260C-UNLIM	-40 to 125	2674 M3.3	Samples
LM2674M-5.0	NRND	SOIC	D	8	95	TBD	Call TI	Call TI	-40 to 125	2674 M5.0	
LM2674M-5.0/NOPB	ACTIVE	SOIC	D	8	95	Green (RoHS & no Sb/Br)	CU SN | Call TI	Level-1-260C-UNLIM	-40 to 125	2674 M5.0	Samples
LM2674M-ADJ/NOPB	ACTIVE	SOIC	D	8	95	Green (RoHS & no Sb/Br)	CU SN | Call TI	Level-1-260C-UNLIM	-40 to 125	2674 MADJ	Samples
LM2674MX-12/NOPB	ACTIVE	SOIC	D	8	2500	Green (RoHS & no Sb/Br)	CU SN | Call TI	Level-1-260C-UNLIM	-40 to 125	2674 M-12	Samples
LM2674MX-3.3/NOPB	ACTIVE	SOIC	D	8	2500	Green (RoHS & no Sb/Br)	CU SN | Call TI	Level-1-260C-UNLIM	-40 to 125	2674 M3.3	Samples
LM2674MX-5.0/NOPB	ACTIVE	SOIC	D	8	2500	Green (RoHS & no Sb/Br)	CU SN	Level-1-260C-UNLIM	-40 to 125	2674 M5.0	Samples
LM2674MX-ADJ/NOPB	ACTIVE	SOIC	D	8	2500	Green (RoHS & no Sb/Br)	CU SN | Call TI	Level-1-260C-UNLIM	-40 to 125	2674 MADJ	Samples
LM2674N-3.3/NOPB	ACTIVE	PDIP	P	8	40	Green (RoHS & no Sb/Br)	CU SN	Level-1-NA-UNLIM	-40 to 125	LM2674 N-3.3	Samples
LM2674N-5.0/NOPB	ACTIVE	PDIP	P	8	40	Green (RoHS & no Sb/Br)	CU SN	Level-1-NA-UNLIM	-40 to 125	LM2674 N-5.0	Samples
LM2674N-ADJ/NOPB	ACTIVE	PDIP	P	8	40	Green (RoHS & no Sb/Br)	CU SN	Level-1-NA-UNLIM	-40 to 125	LM2674 N-ADJ	Samples

(1) The marketing status values are defined as follows:
ACTIVE: Product device recommended for new designs.
LIFEBUY: TI has announced that the device will be discontinued, and a lifetime-buy period is in effect.
NRND: Not recommended for new designs. Device is in production to support existing customers, but TI does not recommend using this part in a new design.

PREVIEW: Device has been announced but is not in production. Samples may or may not be available.
OBSOLETE: TI has discontinued the production of the device.

(2) **RoHS:** TI defines "RoHS" to mean semiconductor products that are compliant with the current EU RoHS requirements for all 10 RoHS substances, including the requirement that RoHS substance do not exceed 0.1% by weight in homogeneous materials. Where designed to be soldered at high temperatures, "RoHS" products are suitable for use in specified lead-free processes. TI may reference these types of products as "Pb-Free".
RoHS Exempt: TI defines "RoHS Exempt" to mean products that contain lead but are compliant with EU RoHS pursuant to a specific EU RoHS exemption.
Green: TI defines "Green" to mean the content of Chlorine (Cl) and Bromine (Br) based flame retardants meet JS709B low halogen requirements of <=1000ppm threshold. Antimony trioxide based flame retardants must also meet the <=1000ppm threshold requirement.

(3) MSL, Peak Temp. - The Moisture Sensitivity Level rating according to the JEDEC industry standard classifications, and peak solder temperature.

(4) There may be additional marking, which relates to the logo, the lot trace code information, or the environmental category on the device.

(5) Multiple Device Markings will be inside parentheses. Only one Device Marking contained in parentheses and separated by a "~" will appear on a device. If a line is indented then it is a continuation of the previous line and the two combined represent the entire Device Marking for that device.

(6) Lead/Ball Finish - Orderable Devices may have multiple material finish options. Finish options are separated by a vertical ruled line. Lead/Ball Finish values may wrap to two lines if the finish value exceeds the maximum column width.

Important Information and Disclaimer: The information provided on this page represents TI's knowledge and belief as of the date that it is provided. TI bases its knowledge and belief on information provided by third parties, and makes no representation or warranty as to the accuracy of such information. Efforts are underway to better integrate information from third parties. TI has taken and continues to take reasonable steps to provide representative and accurate information but may not have conducted destructive testing or chemical analysis on incoming materials and chemicals. TI and TI suppliers consider certain information to be proprietary, and thus CAS numbers and other limited information may not be available for release.

In no event shall TI's liability arising out of such information exceed the total purchase price of the TI part(s) at issue in this document sold by TI to Customer on an annual basis.

TAPE AND REEL INFORMATION

REEL DIMENSIONS

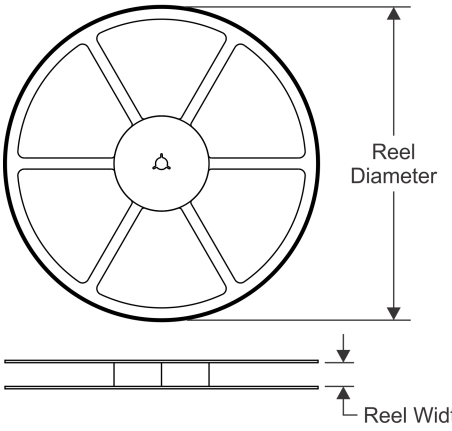

TAPE DIMENSIONS

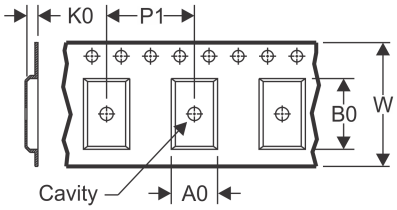

A0	Dimension designed to accommodate the component width
B0	Dimension designed to accommodate the component length
K0	Dimension designed to accommodate the component thickness
W	Overall width of the carrier tape
P1	Pitch between successive cavity centers

QUADRANT ASSIGNMENTS FOR PIN 1 ORIENTATION IN TAPE

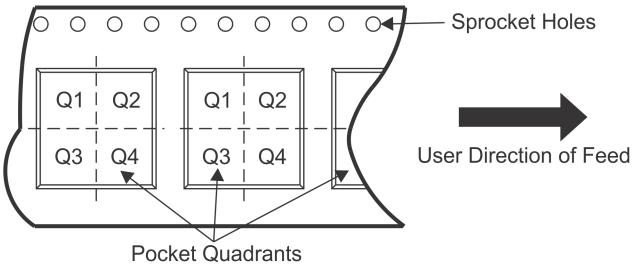

*All dimensions are nominal

Device	Package Type	Package Drawing	Pins	SPQ	Reel Diameter (mm)	Reel Width W1 (mm)	A0 (mm)	B0 (mm)	K0 (mm)	P1 (mm)	W (mm)	Pin1 Quadrant
LM2674LD-ADJ/NOPB	WSON	NHN	16	1000	178.0	12.4	5.3	5.3	1.3	8.0	12.0	Q1
LM2674LDX-5.0/NOPB	WSON	NHN	16	4500	330.0	12.4	5.3	5.3	1.3	8.0	12.0	Q1
LM2674MX-12/NOPB	SOIC	D	8	2500	330.0	12.4	6.5	5.4	2.0	8.0	12.0	Q1
LM2674MX-3.3/NOPB	SOIC	D	8	2500	330.0	12.4	6.5	5.4	2.0	8.0	12.0	Q1
LM2674MX-5.0/NOPB	SOIC	D	8	2500	330.0	12.4	6.5	5.4	2.0	8.0	12.0	Q1
LM2674MX-ADJ/NOPB	SOIC	D	8	2500	330.0	12.4	6.5	5.4	2.0	8.0	12.0	Q1

TAPE AND REEL BOX DIMENSIONS

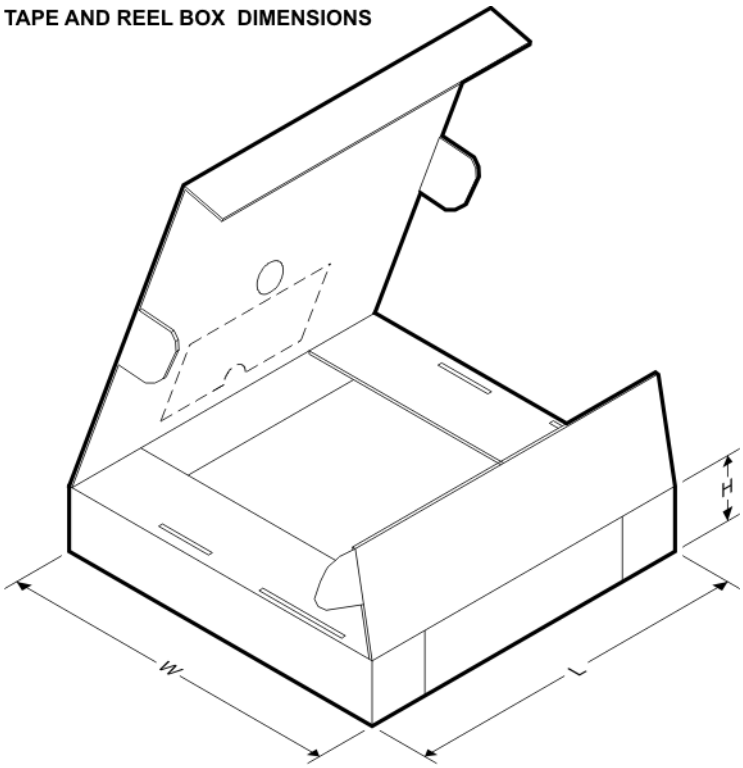

*All dimensions are nominal

Device	Package Type	Package Drawing	Pins	SPQ	Length (mm)	Width (mm)	Height (mm)
LM2674LD-ADJ/NOPB	WSON	NHN	16	1000	210.0	185.0	35.0
LM2674LDX-5.0/NOPB	WSON	NHN	16	4500	367.0	367.0	35.0
LM2674MX-12/NOPB	SOIC	D	8	2500	367.0	367.0	35.0
LM2674MX-3.3/NOPB	SOIC	D	8	2500	367.0	367.0	35.0
LM2674MX-5.0/NOPB	SOIC	D	8	2500	367.0	367.0	35.0
LM2674MX-ADJ/NOPB	SOIC	D	8	2500	367.0	367.0	35.0

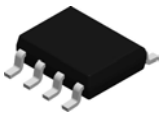

PACKAGE OUTLINE

D0008A

SOIC - 1.75 mm max height

SMALL OUTLINE INTEGRATED CIRCUIT

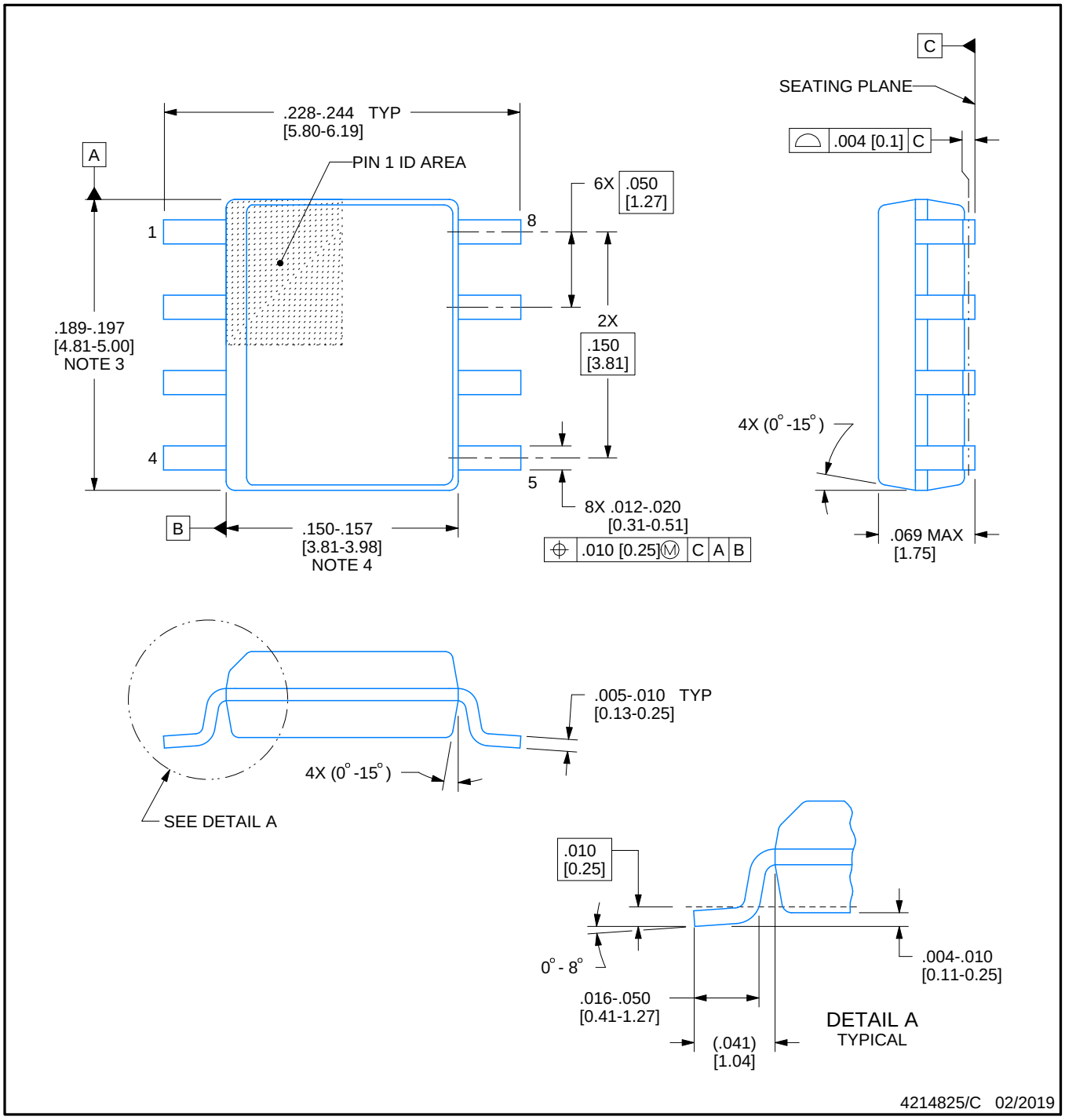

NOTES:

1. Linear dimensions are in inches [millimeters]. Dimensions in parenthesis are for reference only. Controlling dimensions are in inches. Dimensioning and tolerancing per ASME Y14.5M.
2. This drawing is subject to change without notice.
3. This dimension does not include mold flash, protrusions, or gate burrs. Mold flash, protrusions, or gate burrs shall not exceed .006 [0.15] per side.
4. This dimension does not include interlead flash.
5. Reference JEDEC registration MS-012, variation AA.

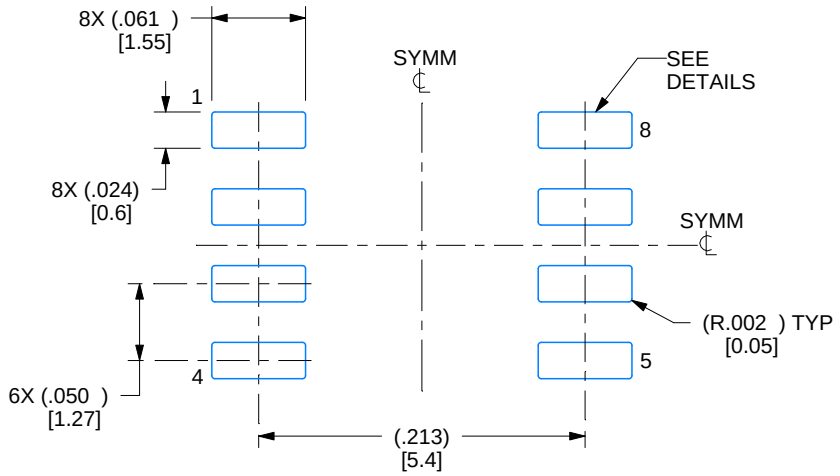

LAND PATTERN EXAMPLE
EXPOSED METAL SHOWN
SCALE:8X

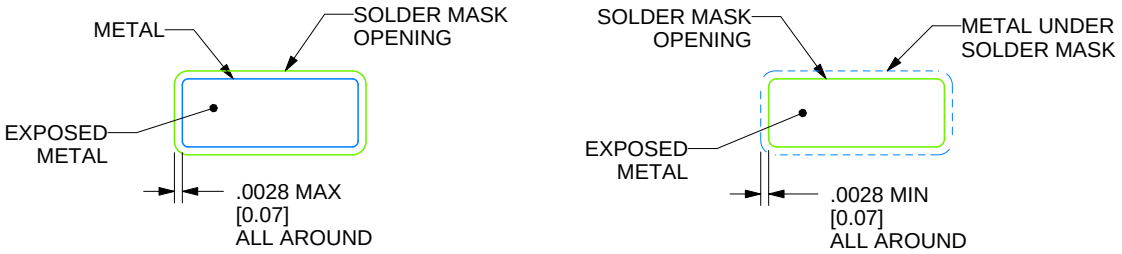

SOLDER MASK DETAILS

4214825/C 02/2019

NOTES: (continued)

6. Publication IPC-7351 may have alternate designs.
7. Solder mask tolerances between and around signal pads can vary based on board fabrication site.

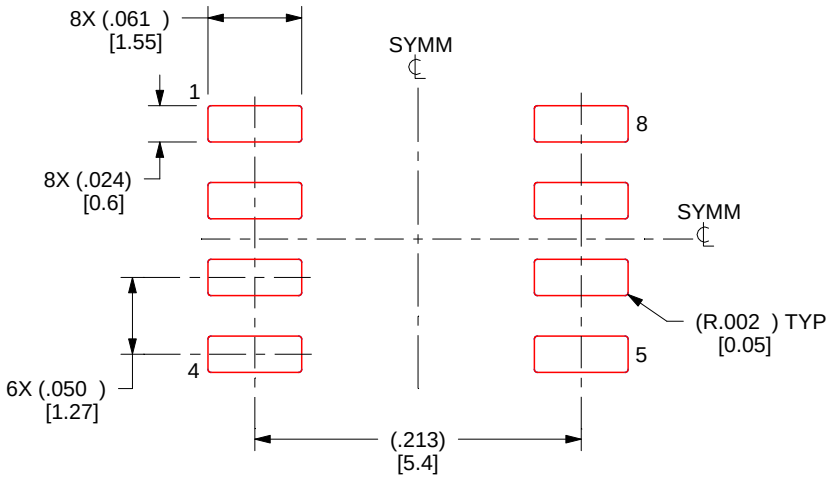

SOLDER PASTE EXAMPLE
BASED ON .005 INCH [0.125 MM] THICK STENCIL
SCALE:8X

4214825/C 02/2019

NOTES: (continued)

8. Laser cutting apertures with trapezoidal walls and rounded corners may offer better paste release. IPC-7525 may have alternate design recommendations.
9. Board assembly site may have different recommendations for stencil design.

P (R–PDIP–T8) PLASTIC DUAL–IN–LINE PACKAGE

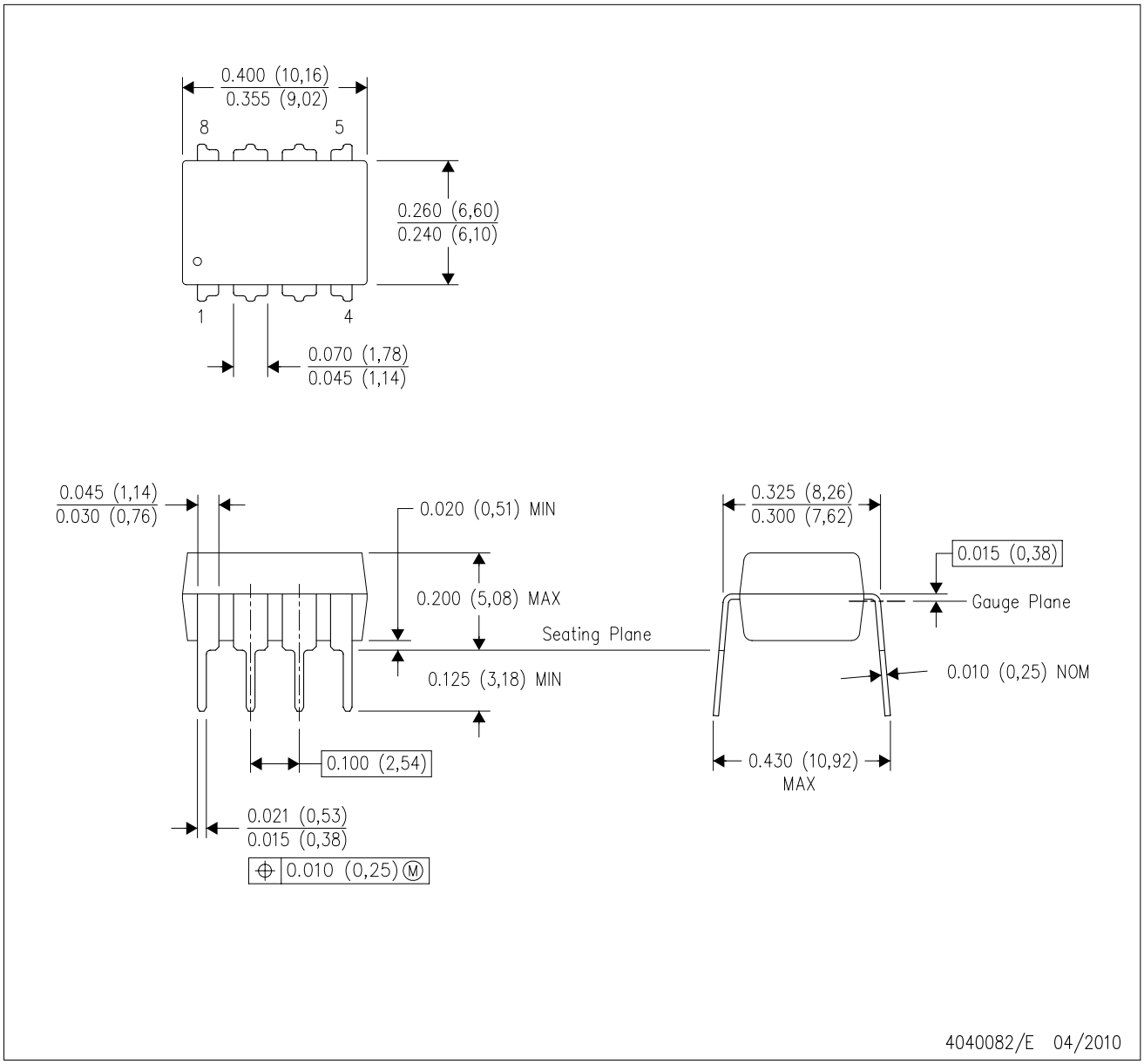

NOTES:
A. All linear dimensions are in inches (millimeters).
B. This drawing is subject to change without notice.
C. Falls within JEDEC MS–001 variation BA.

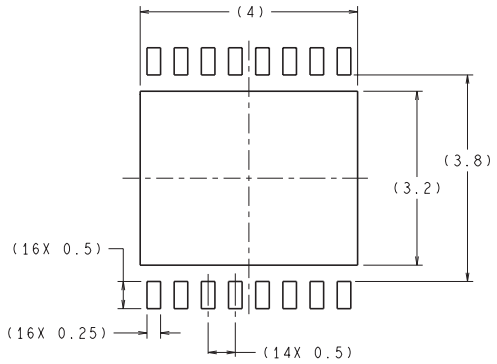

RECOMMENDED LAND PATTERN
1:1 RATIO WITH PKG SOLDER PADS

DIMENSIONS ARE IN MILLIMETERS

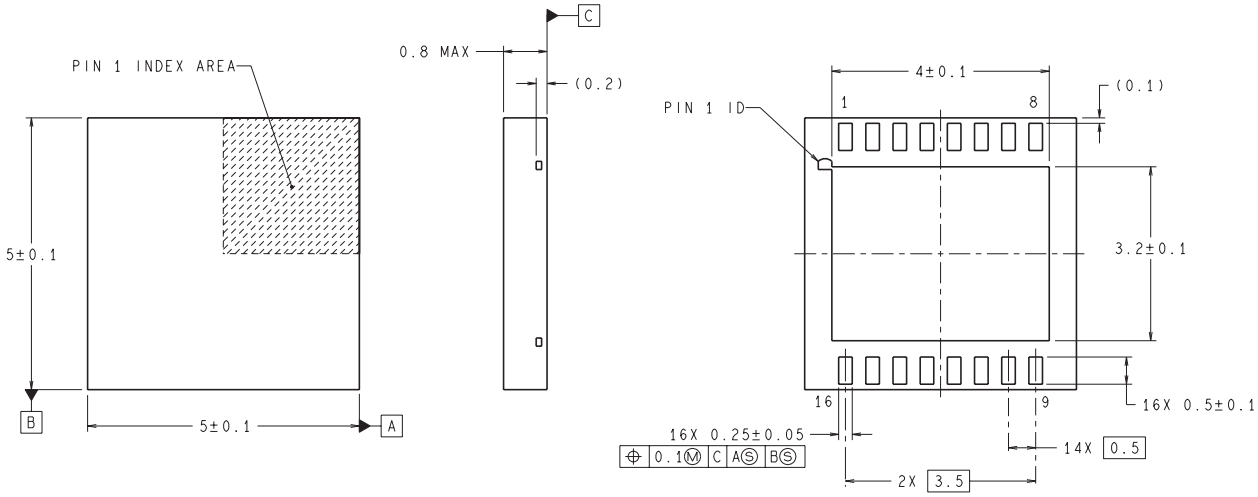

LDA16A (REV A)

IMPORTANT NOTICE AND DISCLAIMER

TI PROVIDES TECHNICAL AND RELIABILITY DATA (INCLUDING DATASHEETS), DESIGN RESOURCES (INCLUDING REFERENCE DESIGNS), APPLICATION OR OTHER DESIGN ADVICE, WEB TOOLS, SAFETY INFORMATION, AND OTHER RESOURCES “AS IS” AND WITH ALL FAULTS, AND DISCLAIMS ALL WARRANTIES, EXPRESS AND IMPLIED, INCLUDING WITHOUT LIMITATION ANY IMPLIED WARRANTIES OF MERCHANTABILITY, FITNESS FOR A PARTICULAR PURPOSE OR NON-INFRINGEMENT OF THIRD PARTY INTELLECTUAL PROPERTY RIGHTS.

These resources are intended for skilled developers designing with TI products. You are solely responsible for (1) selecting the appropriate TI products for your application, (2) designing, validating and testing your application, and (3) ensuring your application meets applicable standards, and any other safety, security, or other requirements. These resources are subject to change without notice. TI grants you permission to use these resources only for development of an application that uses the TI products described in the resource. Other reproduction and display of these resources is prohibited. No license is granted to any other TI intellectual property right or to any third party intellectual property right. TI disclaims responsibility for, and you will fully indemnify TI and its representatives against, any claims, damages, costs, losses, and liabilities arising out of your use of these resources.

TI’s products are provided subject to TI’s Terms of Sale (www.ti.com/legal/termsofsale.html) or other applicable terms available either on ti.com or provided in conjunction with such TI products. TI’s provision of these resources does not expand or otherwise alter TI’s applicable warranties or warranty disclaimers for TI products.

Mailing Address: Texas Instruments, Post Office Box 655303, Dallas, Texas 75265
Copyright © 2019, Texas Instruments Incorporated

Looking for pricing, stock, or lifecycle information?

Click below to explore more details on WIN SOURCE:

- View LM2674N-12/NOPB on WIN SOURCE
- Texas Instruments Information

Optimize Your Supply Chain with WIN SOURCE Solutions

- Global Sourcing Solution
- Obsolete Management
- Cost Control Management
- Shortage Management
- Alternative Solution
- Excess Inventory Management