THE DATASHEET OF

SI8645BB-B-IS

www.win-source.net 0086-755-83957316

Si864x Data Sheet

Low-Power, Quad-Channel Digital Isolators

Skyworks' family of ultra-low-power digital isolators are CMOS devices offering substantial data rate, propagation delay, power, size, reliability, and external BOM advantages over legacy isolation technologies. The operating parameters of these products remain stable across wide temperature ranges and throughout device service life for ease of design and highly uniform performance. All device versions have Schmitt trigger inputs for high noise immunity and only require VDD bypass capacitors.

Data rates up to 150 Mbps are supported, and all devices achieve propagation delays of less than 10 ns. Enable inputs provide a single point control for enabling and disabling output drive. Ordering options include a choice of isolation ratings (1.0, 2.5, 3.75 and 5 kV) and a selectable fail-safe operating mode to control the default output state during power loss. All products >1 kV are safety certified by UL, CSA, VDE, and CQC, and products in wide-body packages support reinforced insulation withstanding up to 5 kV_{RMS}.

Automotive Grade is available for certain part numbers. These products are built using automotive-specific flows at all steps in the manufacturing process to ensure the robustness and low defectivity required for automotive applications.

Industrial Applications

- Industrial automation systems
- Medical electronics
- Isolated switch mode supplies
- Isolated ADC, DAC
- Motor control
- Power inverters
- Communications systems

Safety Regulatory Approvals

- UL 1577 recognized
  - Up to 5000 V_{RMS} for 1 minute
- CSA component notice 5A approval
  - IEC 60950-1, 62368-1, 60601-1 (reinforced insulation)
- VDE certification conformity
  - Si864xxT options certified to reinforced VDE 0884-10
  - All other options certified to basic VDE 0884-10 and reinforced 60950-1
- CQC certification approval
  - GB4943.1

Automotive Applications

- On-board chargers
- Battery management systems
- Charging stations
- Traction inverters
- Hybrid Electric Vehicles
- Battery Electric Vehicles

KEY FEATURES

- High-speed operation
  - DC to 150 Mbps
- No start-up initialization required
- Wide Operating Supply Voltage
  - 2.5–5.5 V
- Up to 5000 V_{RMS} isolation
- Reinforced VDE 0884-10, 10 kV surge-capable (Si864xxT)
- 60-year life at rated working voltage
- High electromagnetic immunity
- Ultra low power (typical)

  5 V Operation
  - 1.6 mA per channel at 1 Mbps
  - 5.5 mA per channel at 100 Mbps

  2.5 V Operation
  - 1.5 mA per channel at 1 Mbps
  - 3.5 mA per channel at 100 Mbps
- Tri-state outputs with ENABLE
- Schmitt trigger inputs
- Selectable fail-safe mode
  - Default high or low output (ordering option)
- Precise timing (typical)
  - 10 ns propagation delay
  - 1.5 ns pulse width distortion
  - 0.5 ns channel-channel skew
  - 2 ns propagation delay skew
  - 5 ns minimum pulse width
- Transient Immunity 50 kV/µs
- AEC-Q100 qualification
- Wide temperature range
  - –40 to 125 °C
- RoHS-compliant packages
  - SOIC-16 wide body
  - SOIC-16 narrow body
  - QSOP-16
- Automotive-grade OPNs available
  - AIAG compliant PPAP documentation support
  - IMDS and CAMDS listing support

1. Ordering Guide

Industrial and Automotive Grade OPNs

Industrial-grade devices (part numbers having an "-I" in their suffix) are built using well-controlled, high-quality manufacturing flows to ensure robustness and reliability. Qualifications are compliant with JEDEC, and defect reduction methodologies are used throughout definition, design, evaluation, qualification, and mass production steps.

Automotive-grade devices (part numbers having an "-A" in their suffix) are built using automotive-specific flows at all steps in the manufacturing process to ensure robustness and low defectivity. These devices are supported with AIAG-compliant Production Part Approval Process (PPAP) documentation, and feature International Material Data System (IMDS) and China Automotive Material Data System (CAMDS) listings. Qualifications are compliant with AEC-Q100, and a zero-defect methodology is maintained throughout definition, design, evaluation, qualification, and mass production steps.

Table 1.1. Ordering Guide for Valid OPNs[1, 2, 5]

Ordering Part Numbers (OPNs)	Automotive OPNs[6, 7]	Number of Inputs VDD1 Side	Number of Inputs VDD2 Side	Max Data Rate (Mbps)	Default Output State	Isolation Rating (kV)	Package
QSOP-16 Packages							
Si8640BA-B-IU	Si8640BA-AU	4	0	150	Low	1.0	QSOP-16
Si8640BB-B-IU	Si8640BB-AU	4	0	150	Low	2.5	QSOP-16
Si8640EB-B-IU	Si8640EB-AU	4	0	150	High	2.5	QSOP-16
Si8641BA-B-IU	Si8641BA-AU	3	1	150	Low	1.0	QSOP-16
Si8641BA-C-IU	Si8641BA-AU	3	1	150	Low	1.0	QSOP-16
Si8641BB-B-IU	Si8641BB-AU	3	1	150	Low	2.5	QSOP-16
Si8641EB-B-IU	Si8641EB-AU	3	1	150	High	2.5	QSOP-16
Si8642BA-B-IU	Si8642BA-AU	2	2	150	Low	1.0	QSOP-16
Si8642BA-C-IU	Si8642BA-AU	2	2	150	Low	1.0	QSOP-16
Si8642BB-B-IU	Si8642BB-AU	2	2	150	Low	2.5	QSOP-16
Si8642EA-B-IU	Si8642EA-AU	2	2	150	High	1.0	QSOP-16
Si8642EB-B-IU	Si8642EB-AU	2	2	150	High	2.5	QSOP-16
Si8645BA-B-IU	Si8645BA-AU	4	0	150	Low	1.0	QSOP-16
Si8645BA-C-IU	Si8645BA-AU	4	0	150	Low	1.0	QSOP-16
Si8645BB-B-IU	Si8645BB-AU	4	0	150	Low	2.5	QSOP-16
SOIC-16 Packages							
Si8640BB-B-IS1	Si8640BB-AS1	4	0	150	Low	2.5	NB SOIC-16
Si8640BB-B-IS	Si8640BB-AS	4	0	150	Low	2.5	WB SOIC-16
Si8640BC-B-IS1	Si8640BC-AS1	4	0	150	Low	3.75	NB SOIC-16
Si8640BD-B-IS2	Si8640BD-AS2	4	0	150	Low	5.0	WB SOIC-16 (8 mm creepage)[4]
Si8640BD-B-IS	Si8640BD-AS	4	0	150	Low	5.0	WB SOIC-16
Si8640EC-B-IS1	Si8640EC-AS1	4	0	150	High	3.75	NB SOIC-16
Si8640ED-B-IS2	Si8640ED-AS2	4	0	150	High	5.0	WB SOIC-16 (8 mm creepage)[4]

Ordering Part Numbers (OPNs)	Automotive OPNs[6, 7]	Number of Inputs VDD1 Side	Number of Inputs VDD2 Side	Max Data Rate (Mbps)	Default Output State	Isolation Rating (kV)	Package
Si8640ED-B-IS	Si8640ED-AS	4	0	150	High	5.0	WB SOIC-16
Si8641BB-B-IS1	Si8641BB-AS1	3	1	150	Low	2.5	NB SOIC-16
Si8641BB-B-IS	Si8641BB-AS	3	1	150	Low	2.5	WB SOIC-16
Si8641BC-B-IS1	Si8641BC-AS1	3	1	150	Low	3.75	NB SOIC-16
Si8641BD-B-IS2	Si8641BD-AS2	3	1	150	Low	5.0	WB SOIC-16 (8 mm creepage)[4]
Si8641BD-B-IS	Si8641BD-AS	3	1	150	Low	5.0	WB SOIC-16
Si8641EC-B-IS1	Si8641EC-AS1	3	1	150	High	3.75	NB SOIC-16
Si8641ED-B-IS2	Si8641ED-AS2	3	1	150	High	5.0	WB SOIC-16 (8 mm creepage)[4]
Si8641ED-B-IS	Si8641ED-AS	3	1	150	High	5.0	WB SOIC-16
Si8642BB-B-IS1	Si8642BB-AS1	2	2	150	Low	2.5	NB SOIC-16
Si8642BB-B-IS	Si8642BB-AS	2	2	150	Low	2.5	WB SOIC-16
Si8642BC-B-IS1	Si8642BC-AS1	2	2	150	Low	3.75	NB SOIC-16
Si8642BD-B-IS2	Si8642BD-AS2	2	2	150	Low	5.0	WB SOIC-16 (8 mm creepage)[4]
Si8642BD-B-IS	Si8642BD-AS	2	2	150	Low	5.0	WB SOIC-16
Si8642EC-B-IS1	Si8642EC-AS1	2	2	150	High	3.75	NB SOIC-16
Si8642ED-B-IS2	Si8642ED-AS2	2	2	150	High	5.0	WB SOIC-16 (8 mm creepage)[4]
Si8642ED-B-IS	Si8642ED-AS	2	2	150	High	5.0	WB SOIC-16
Si8645BB-B-IS1	Si8645BB-AS1	4	0	150	Low	2.5	NB SOIC-16
Si8645BB-B-IS	Si8645BB-AS	4	0	150	Low	2.5	WB SOIC-16
Si8645BC-B-IS1	Si8645BC-AS1	4	0	150	Low	3.75	NB SOIC-16
Si8645BD-B-IS	Si8645BD-AS	4	0	150	Low	5.0	WB SOIC-16
Product Options with Reinforced VDE 0884-10 Rating with 10 kV Surge Capability							
Si8640BT-IS	Si8640BT-AS	4	0	150	Low	5.0	WB SOIC-16
Si8640ET-IS	Si8640ET-AS	4	0	150	High	5.0	WB SOIC-16
Si8641BT-IS	Si8641BT-AS	3	1	150	Low	5.0	WB SOIC-16
Si8641ET-IS	Si8641ET-AS	3	1	150	High	5.0	WB SOIC-16
Si8642BT-IS	Si8642BT-AS	2	2	150	Low	5.0	WB SOIC-16
Si8642ET-IS	Si8642ET-AS	2	2	150	High	5.0	WB SOIC-16
Si8645BT-IS	Si8645BT-AS	4	0	150	Low	5.0	WB SOIC-16
Si8645ET-IS	Si8645ET-AS	4	0	150	High	5.0	WB SOIC-16

Ordering Part Numbers (OPNs)	Automotive OPNs[6, 7]	Number of Inputs VDD1 Side	Number of Inputs VDD2 Side	Max Data Rate (Mbps)	Default Output State	Isolation Rating (kV)	Package

Note:

1. All packages are RoHS-compliant with peak reflow temperatures of 260 °C according to the JEDEC industry standard classifications and peak solder temperatures.
2. “Si” and “SI” are used interchangeably.
3. An "R" at the end of the part number denotes tape and reel packaging option.
4. The package designated IS2 has a design that eliminates tie bars, thus allowing for extra creepage distance while maintaining standard WB SOIC-16 package dimensions and land pattern.
5. Temperature range is –40 to 125 °C.
6. Automotive-Grade devices (with an "–A" suffix) are identical in construction materials, topside marking, and electrical parameters to their Industrial-Grade (with an "–I" suffix) version counterparts. Automotive-Grade products are produced utilizing full automotive process flows and additional statistical process controls throughout the manufacturing flow. The Automotive-Grade part number is included on shipping labels.
7. In the top markings of each device, the Manufacturing Code represented by either “RTTTTT” or “TTTTTT” contains as its first character a letter in the range N through Z to indicate Automotive-Grade.

Table of Contents

1. Ordering Guide . . . 2

2. Functional Description . . . 6

2.1 Theory of Operation . . . 6

2.2 Eye Diagram. . . . 7

3. Device Operation . . . 8

3.1 Device Startup . . . 10

3.2 Undervoltage Lockout . . . 10

3.3 Layout Recommendations . . . 10

3.3.1 Supply Bypass . . . 10

3.3.2 Output Pin Termination . . . 10

3.4 Fail-Safe Operating Mode . . . 10

3.5 Typical Performance Characteristics . . . 11

4. Electrical Specifications . . . 12

5. Pin Descriptions . . . 29

6. Package Outline (16-Pin Wide Body SOIC, -IS and -IS2 Package Option) . . . 30

7. Land Pattern (16-Pin Wide Body SOIC, -IS Package Options) . . . 32

8. Land Pattern (16-Pin Wide Body SOIC, -IS2 Package Options) . . . 33

9. Package Outline (16-Pin Narrow Body SOIC) . . . 34

10. Land Pattern (16-Pin Narrow Body SOIC) . . . 36

11. Package Outline (16-Pin QSOP) . . . 37

12. Land Pattern (16-Pin QSOP) . . . 39

13. Top Marking (16-Pin Wide Body SOIC, -IS and -IS2 Package Options) . . . 40

14. Top Marking (16-Pin Narrow Body SOIC) . . . 41

15. Top Marking (16-Pin QSOP) . . . 42

16. Revision History . . . 43

2. Functional Description

2.1 Theory of Operation

The operation of an Si864x channel is analogous to that of an opto coupler, except an RF carrier is modulated instead of light. This simple architecture provides a robust isolated data path and requires no special considerations or initialization at start-up. A simplified block diagram for a single Si864x channel is shown in the figure below.

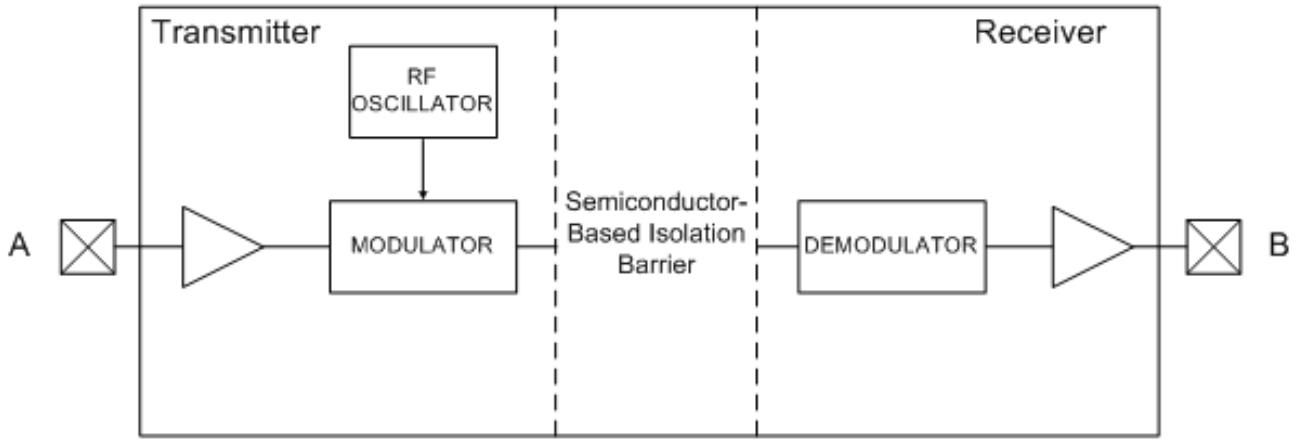

Figure 2.1. Simplified Channel Diagram

A channel consists of an RF Transmitter and RF Receiver separated by a semiconductor-based isolation barrier. Referring to the transmitter, input A modulates the carrier provided by an RF oscillator using on/off keying. The Receiver contains a demodulator that decodes the input state according to its RF energy content and applies the result to output B via the output driver. This RF on/off keying scheme is superior to pulse code schemes as it provides best-in-class noise immunity, low power consumption, and improved immunity to magnetic fields. See the following figure for more details.

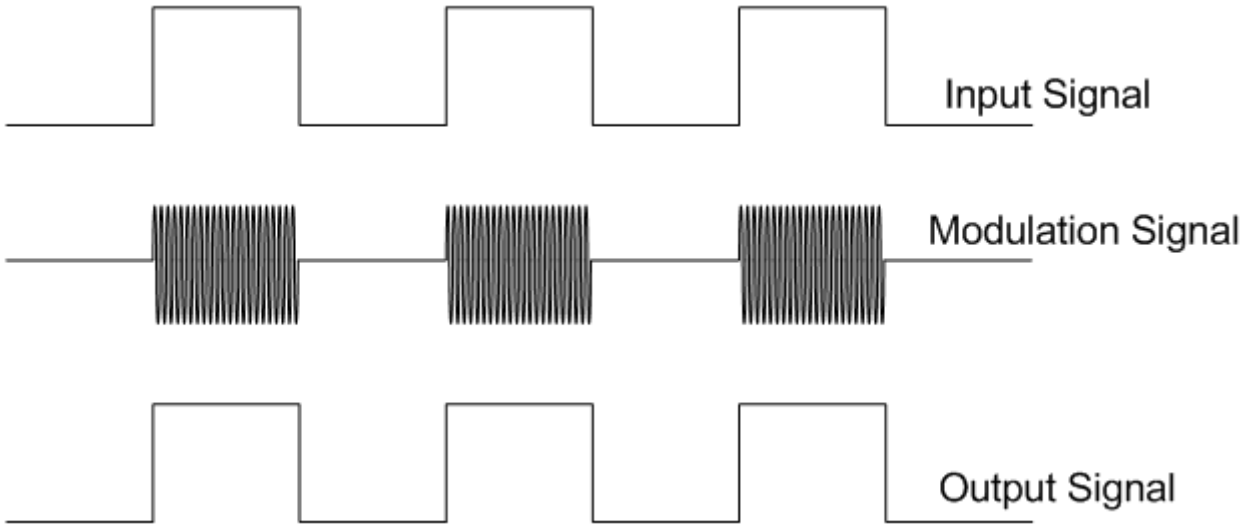

Figure 2.2. Modulation Scheme

2.2 Eye Diagram

The figure below illustrates an eye diagram taken on an Si8640. For the data source, the test used an Anritsu (MP1763C) Pulse Pattern Generator. The output of the generator's clock and data from an Si8640 were captured on an oscilloscope set to 1.0 ns/div. The results illustrate that data integrity was maintained even at the high data rate of 150 Mbps. The results also show that 2 ns pulse width distortion and 350 ps peak jitter were exhibited.

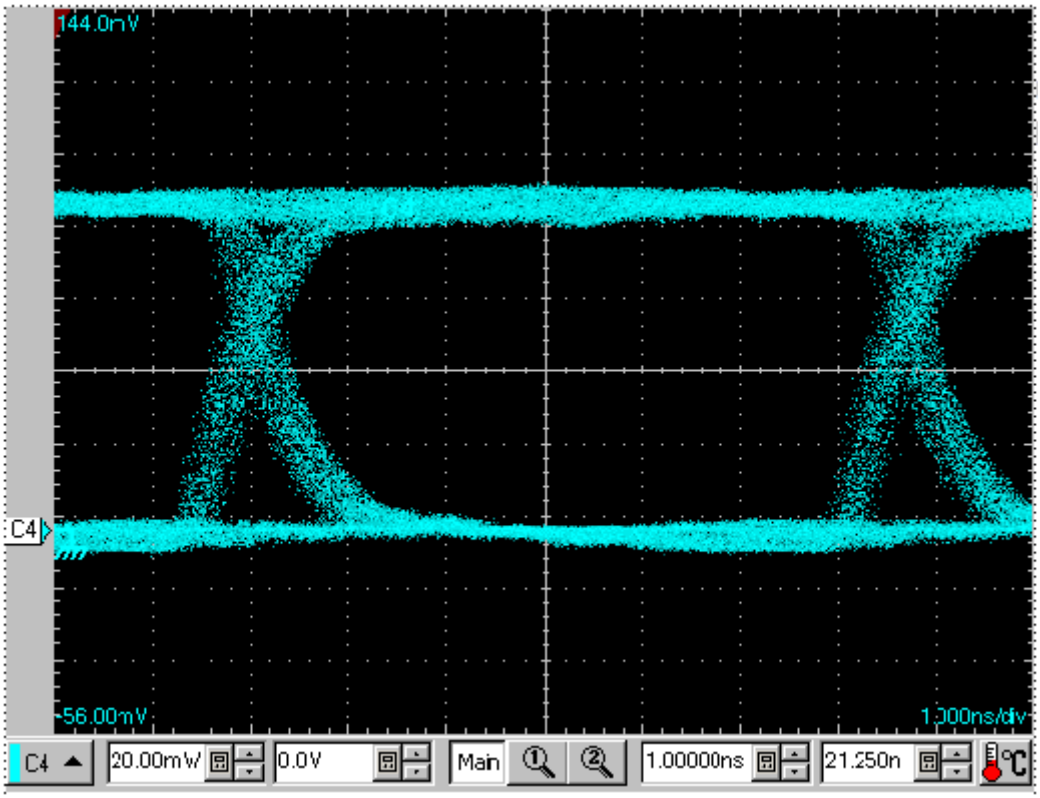

Figure 2.3. Eye Diagram

3. Device Operation

Device behavior during start-up, normal operation, and shutdown is shown in Figure 3.1 Device Behavior during Normal Operation on page 10, where UVLO+ and UVLO– are the respective positive-going and negative-going thresholds. Refer to the following tables to determine outputs when power supply (VDD) is not present and for logic conditions when enable pins are used.

Table 3.1. Si86xx Logic Operation

V_I Input[1, 2]	EN Input[1, 2, 3, 4]	VDDI State[1, 5, 6]	VDDO State[1, 5, 6]	V_O Output[1, 2]	Comments
H	H or NC	P	P	H	Enabled, normal operation.
L	H or NC	P	P	L	
X[7]	L	P	P	Hi-Z[8]	Disabled.
NC	H or NC	P	P	L[9] H[9]	Output L for default low product options. Output H for default high product options.
X[7]	H or NC	UP	P	L[9] H[9]	Upon transition of VDDI from unpowered to powered, V_O returns to the same state as V_I in less than 1 µs.
X[7]	L	UP	P	Hi-Z[8]	Disabled.
X[7]	X[7]	P	UP	Undetermined	Upon transition of VDDO from unpowered to powered, VO returns to the same state as V_I within 1 µs, if EN is in either the H or NC state. Upon transition of VDDO from unpowered to powered, V_O returns to Hi-Z within 1 µs if EN is L.

Note:

1. VDDI and VDDO are the input and output power supplies. V_I and V_O are the respective input and output terminals. EN is the enable control input located on the same output side.
2. X = not applicable; H = Logic High; L = Logic Low; Hi-Z = High Impedance.
3. It is recommended that the enable inputs be connected to an external logic high or low level when the Si86xx is operating in noisy environments.
4. No Connect (NC) replaces EN1 on Si86x0/x5. No Connect replaces EN2 on the Si86x5. No Connects are not internally connected and can be left floating, tied to VDD, or tied to GND. .
5. “Powered” state (P) is defined as 2.5 V < VDD < 5.5 V.
6. “Unpowered” state (UP) is defined as VDD = 0 V.
7. Note that an I/O can power the die for a given side through an internal diode if its source has adequate current.
8. When using the enable pin (EN) function, the output pin state is driven into a high-impedance state when the EN pin is disabled (EN = 0).
9. See Section 1. Ordering Guide for details. This is the selectable fail-safe operating mode (ordering option). Some devices have default output state = H, and some have default output state = L, depending on the ordering part number (OPN). For default high devices, the data channels have 2 µA (Si86xxxA/B/C/D) or 10 µA (Si86xxxT) pull-ups on inputs/outputs. For default low devices, the data channels have 2 µA (Si86xxxA/B/C/D) or 10 µA (Si86xxxT) pull-downs on inputs/outputs.

Table 3.2. Enable Input Truth

Part Number	EN1[1, 2]	EN2[1, 2]	Operation
Si8640	—	H	Outputs B1, B2, B3, B4 are enabled and follow the input state.
	—	L	Outputs B1, B2, B3, B4 are disabled and in high impedance state.[3]
Si8641	H	X	Output A4 enabled and follows the input state.
	L	X	Output A4 disabled and in high impedance state.[3]
	X	H	Outputs B1, B2, B3 are enabled and follow the input state.
	X	L	Outputs B1, B2, B3 are disabled and in high impedance state.[3]
Si8642	H	X	Outputs A3 and A4 are enabled and follow the input state.
	L	X	Outputs A3 and A4 are disabled and in high impedance state.[3]
	X	H	Outputs B1 and B2 are enabled and follow the input state.
	X	L	Outputs B1 and B2 are disabled and in high impedance state.[3]
Si8645	—	—	Outputs B1, B2, B3, B4 are enabled and follow the input state.

Note:

1. Enable inputs EN1 and EN2 can be used for multiplexing, for clock sync, or other output control. EN1, EN2 logic operation is summarized for each isolator product in Table 2. These inputs are internally pulled-up to local VDD allowing them to be connected to an external logic level (high or low) or left floating. To minimize noise coupling, do not connect circuit traces to EN1 or EN2 if they are left floating. If EN1, EN2 are unused, it is recommended they be connected to an external logic level, especially if the Si86xx is operating in a noisy environment.
2. X = not applicable; H = Logic High; L = Logic Low.
3. When using the enable pin (EN) function, the output pin state is driven into a high-impedance state when the EN pin is disabled (EN = 0).

3.1 Device Startup

Outputs are held low during powerup until VDD is above the UVLO threshold for time period tSTART. Following this, the outputs follow the states of inputs.

3.2 Undervoltage Lockout

Undervoltage Lockout (UVLO) is provided to prevent erroneous operation during device startup and shutdown or when VDD is below its specified operating circuits range. Both Side A and Side B each have their own undervoltage lockout monitors. Each side can enter or exit UVLO independently. For example, Side A unconditionally enters UVLO when V_{DD1} falls below $V_{DD1(UVLO-)}$ and exits UVLO when V_{DD1} rises above $V_{DD1(UVLO+)}$. Side B operates the same as Side A with respect to its V_{DD2} supply.

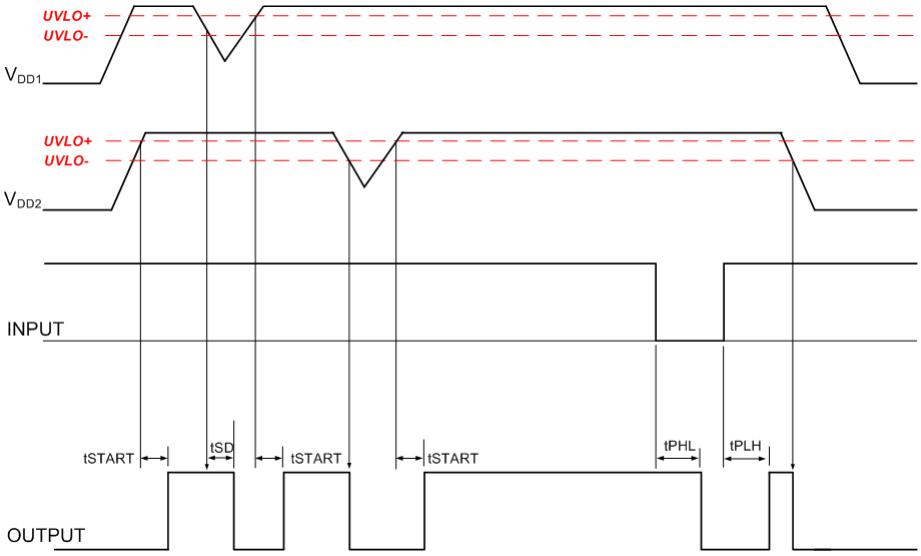

Figure 3.1. Device Behavior during Normal Operation

3.3 Layout Recommendations

To ensure safety in the end-user application, high-voltage circuits (i.e., circuits with >30 V_{AC}) must be physically separated from the safety extra-low-voltage circuits (SELV is a circuit with <30 V_{AC}) by a certain distance (creepage/clearance). If a component, such as a digital isolator, straddles this isolation barrier, it must meet those creepage/clearance requirements and also provide a sufficiently large high-voltage breakdown protection rating (commonly referred to as working voltage protection). Table 4.6 Insulation and Safety-Related Specifications on page 25 and Table 4.8 VDE 0884-10 Insulation Characteristics for Si86xx [1] on page 26 detail the working voltage and creepage/clearance capabilities of the Si86xx. These tables also detail the component standards (UL1577, IEC60747, CSA 5A), which are readily accepted by certification bodies to provide proof for end-system specifications requirements. Refer to the end-system specification (61010-1, 60950-1, 60601-1, etc.) requirements before starting any design that uses a digital isolator.

3.3.1 Supply Bypass

The Si864x family requires a 0.1 µF bypass capacitor between V_{DD1} and GND1 and V_{DD2} and GND2. The capacitor should be placed as close as possible to the package. To enhance the robustness of a design, the user may also include resistors (50–300 Ω) in series with the inputs and outputs if the system is excessively noisy.

3.3.2 Output Pin Termination

The nominal output impedance of an isolator driver channel is approximately 50 Ω, ±40%, which is a combination of the value of the on-chip series termination resistor and channel resistance of the output driver FET. When driving loads where transmission line effects will be a factor, output pins should be appropriately terminated with controlled impedance PCB traces.

3.4 Fail-Safe Operating Mode

Si86xx devices feature a selectable (by ordering option) mode whereby the default output state (when the input supply is unpowered) can either be a logic high or logic low when the output supply is powered. See Table 3.1 Si86xx Logic Operation on page 8 and 1. Ordering Guide for more information.

3.5 Typical Performance Characteristics

The typical performance characteristics depicted in the following diagrams are for information purposes only. Refer to 4. Electrical Specifications for actual specification limits.

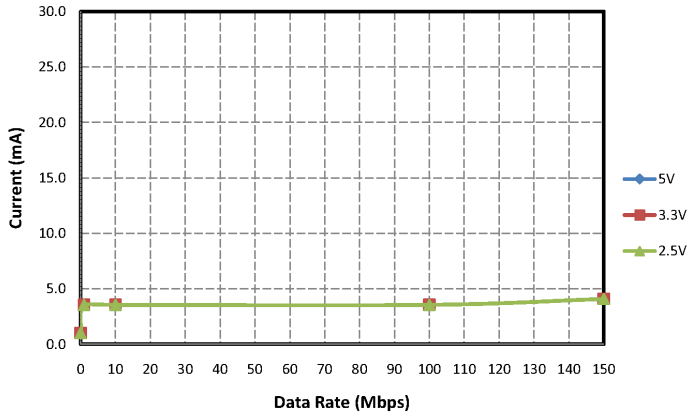

Figure 3.2. Si8640/45 Typical VDD1 Supply Current vs. Data Rate 5, 3.3, and 2.5 V Operation

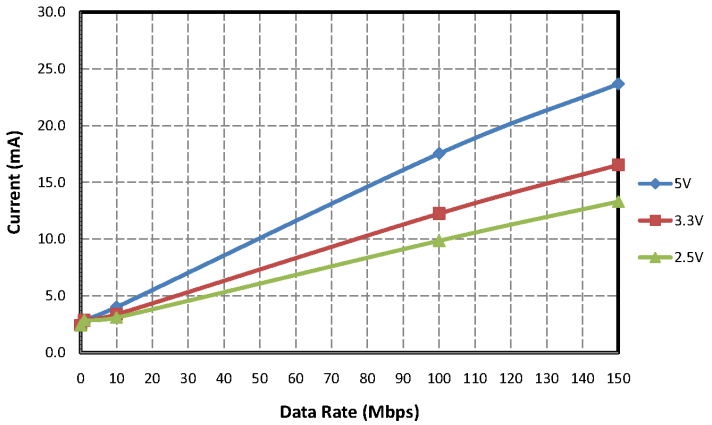

Figure 3.3. Si8640/45 Typical VDD2 Supply Current vs. Data Rate 5, 3.3, and 2.5 V

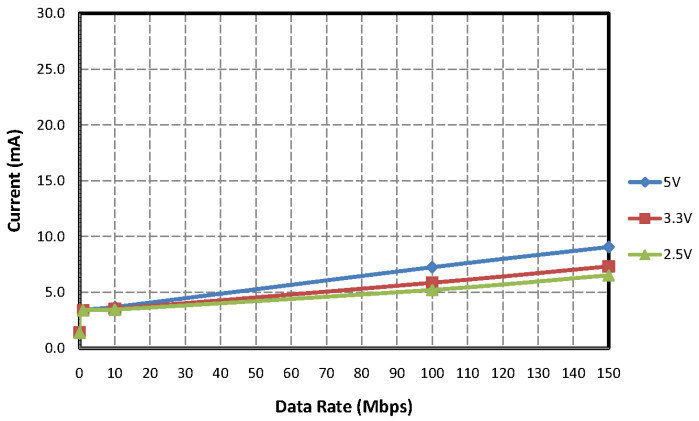

Figure 3.4. Si8641 Typical VDD1 Supply Current vs. Data Rate 5, 3.3, and 2.5 V Operation

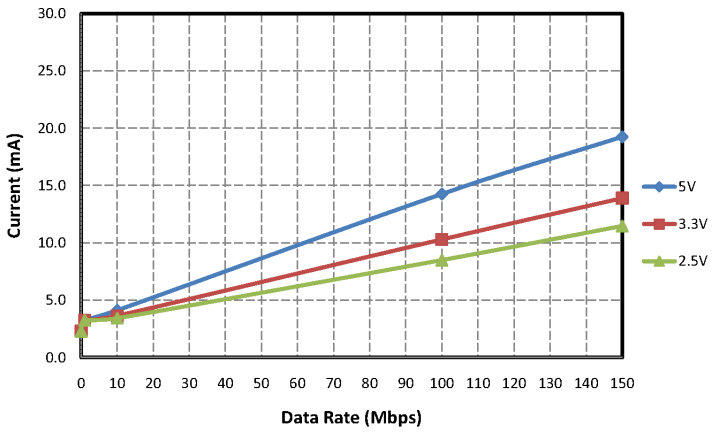

Figure 3.5. Si8641 Typical VDD2 Supply Current vs. Data Rate 5, 3.3, and 2.5 V Operation (15 pF Load)

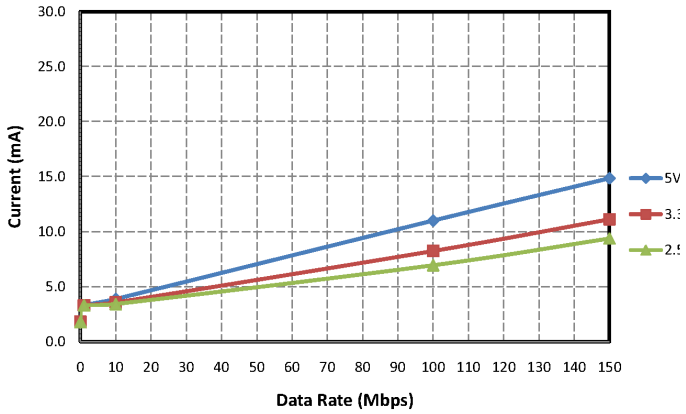

Figure 3.6. Si8642 Typical VDD1 or VDD2 Supply Current vs. Data Rate 5, 3.3, and 2.5 V Operation (15 pF Load)

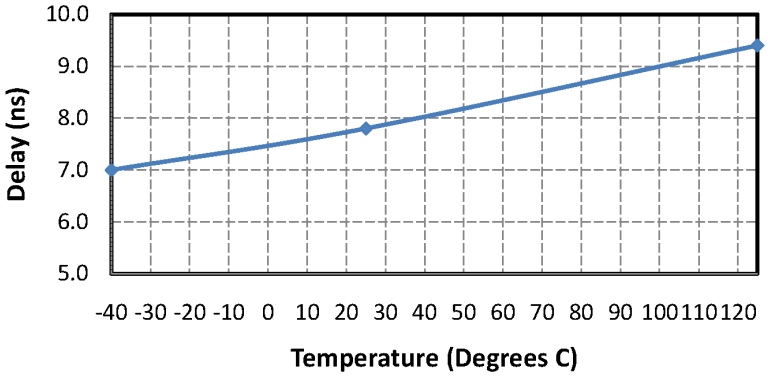

Figure 3.7. Propagation Delay vs. Temperature (5.0 V Data)

4. Electrical Specifications

Table 4.1. Recommended Operating Conditions

Parameter	Symbol	Min	Typ	Max	Unit
Junction Operating Temperature	T_J	—	—	150	°C
Ambient Operating Temperature [1]	T_A	–40	25	125	°C
Supply Voltage	V_{DD1}	2.375	—	5.5	V
	V_{DD2}	2.375	—	5.5	V

Note:
1. The maximum ambient temperature is dependent on data frequency, output loading, number of operating channels, and supply voltage.

Table 4.2. Electrical Characteristics

(V_{DD1} = 5 V±10%, V_{DD2} = 5 V±10%, T_A = –40 to 125 °C)

Parameter	Symbol	Test Condition	Min	Typ	Max	Unit
VDD Undervoltage Threshold	VDD_{UV+}	V_{DD1}, V_{DD2} rising	1.95	2.24	2.375	V
VDD Undervoltage Threshold	VDD_{UV-}	V_{DD1}, V_{DD2} falling	1.88	2.16	2.325	V
VDD Undervoltage Hysteresis	VDD_{HYS}		50	70	95	mV
Positive-Going Input Threshold	VT+	All inputs rising	1.4	1.67	1.9	V
Negative-Going Input Threshold	VT–	All inputs falling	1.0	1.23	1.4	V
Input Hysteresis	V_{HYS}		0.38	0.44	0.50	V
High Level Input Voltage	V_{IH}		2.0	—	—	V
Low Level Input Voltage	V_{IL}		—	—	0.8	V
High Level Output Voltage	V_{OH}	Ioh = –4 mA	V_{DD1}, V_{DD2} – 0.4	4.8	—	V
Low Level Output Voltage	V_{OL}	Iol = 4 mA	—	0.2	0.4	V
Input Leakage Current						
Si864xxA/B/C/D	I_L		—	—	±10	µA
Si864xxT			—	—	±15	
Output Impedance [1]	Z_O		—	50	—	Ω
Enable Input Current						
Si864xxA/B/C/D	I_{ENH}, I_{ENL}	V_{ENx} = V_{IH} or V_{IL}	—	2.0	—	µA
Si864xxT			—	10.0	—	
DC Supply Current (All Inputs 0 V or at Supply)						

Parameter	Symbol	Test Condition	Min	Typ	Max	Unit
Si8640Bx, Ex, Si8645Bx						
V_{DD1}		V_I = 0(Bx), 1(Ex)	—	1.0	1.6	mA
V_{DD2}		V_I = 0(Bx), 1(Ex)	—	2.4	3.8	
V_{DD1}		V_I = 1(Bx), 0(Ex)	—	6.1	9.2	
V_{DD2}		V_I = 1(Bx), 0(Ex)	—	2.5	4.0	
Si8641xA/B/C/D						
V_{DD1}		V_I = 0(Bx), 1(Ex)	—	1.4	2.2	mA
V_{DD2}		V_I = 0(Bx), 1(Ex)	—	2.3	3.7	
V_{DD1}		V_I = 1(Bx), 0(Ex)	—	5.2	7.4	
V_{DD2}		V_I = 1(Bx), 0(Ex)	—	3.6	5.4	
Si8641xT						
V_{DD1}		V_I = 0(Bx), 1(Ex)	—	1.4	2.2	mA
V_{DD2}		V_I = 0(Bx), 1(Ex)	—	2.3	3.7	
V_{DD1}		V_I = 1(Bx), 0(Ex)	—	5.2	7.8	
V_{DD2}		V_I = 1(Bx), 0(Ex)	—	3.6	5.4	
Si8642Bx, Ex						
V_{DD1}		V_I = 0(Bx), 1(Ex)	—	1.8	2.9	mA
V_{DD2}		V_I = 0(Bx), 1(Ex)	—	1.8	2.9	
V_{DD1}		V_I = 1(Bx), 0(Ex)	—	4.4	6.6	
V_{DD2}		V_I = 1(Bx), 0(Ex)	—	4.4	6.6	
1 Mbps Supply Current (All Inputs = 500 kHz Square Wave, Cl = 15 pF on All Outputs)						
Si8640Bx, Ex, Si8645Bx						
V_{DD1}			—	3.6	5.0	mA
V_{DD2}			—	2.9	4.0	
Si8641Bx, Ex						
V_{DD1}			—	3.4	4.8	mA
V_{DD2}			—	3.3	4.6	
Si8642Bx, Ex						
V_{DD1}			—	3.3	4.6	mA
V_{DD2}			—	3.3	4.6	
10 Mbps Supply Current (All Inputs = 5 MHz Square Wave, Cl = 15 pF on All Outputs)						
All Si8640xA/B/C/D & Si8645xA/B/C/D						
V_{DD1}			—	3.6	5.0	mA
V_{DD2}			—	4.0	5.6	

Parameter	Symbol	Test Condition	Min	Typ	Max	Unit
Si8640xT & Si8645xT						
V_{DD1}			—	3.6	6.0	mA
V_{DD2}			—	4.0	5.6	
Si8641Bx, Ex						
V_{DD1}			—	3.7	5.2	mA
V_{DD2}			—	4.1	5.8	
Si8642Bx, Ex						
V_{DD1}			—	3.9	5.4	mA
V_{DD2}			—	3.9	5.4	
100 Mbps Supply Current (All Inputs = 50 MHz Square Wave, Cl = 15 pF on All Outputs)						
All Si8640xA/B/C/D & Si8645xA/B/C/D						
V_{DD1}			—	3.6	5.0	mA
V_{DD2}			—	17.5	22.8	
Si8640xT & Si8645xT						
V_{DD1}			—	3.6	6.0	mA
V_{DD2}			—	17.5	22.8	
Si8641Bx, Ex						
V_{DD1}			—	7.3	9.8	mA
V_{DD2}			—	14.3	18.5	
Si8642Bx, Ex						
V_{DD1}			—	11	14.3	mA
V_{DD2}			—	11	14.3	
Timing Characteristics						
Si864xBx, Ex						
Maximum Data Rate			0	—	150	Mbps
Minimum Pulse Width			—	—	5.0	ns
Propagation Delay	t_{PHL}, t_{PLH}	See Figure 4.2 Propagation Delay Timing on page 16	5.0	8.0	13	ns
Pulse Width Distortion |tPLH – tPHL|	PWD	See Figure 4.2 Propagation Delay Timing on page 16	—	0.2	4.5	ns
Propagation Delay Skew [2]	$t_{PSK(P-P)}$		—	2.0	4.5	ns
Channel-Channel Skew	t_{PSK}		—	0.4	2.5	ns
All Models						
Output Rise Time	t_r	C_L = 15 pF See Figure 4.2 Propagation Delay Timing on page 16	—	2.5	4.0	ns

Parameter	Symbol	Test Condition	Min	Typ	Max	Unit
Output Fall Time	t_f	C_L = 15 pF See Figure 4.2 Propagation Delay Timing on page 16	—	2.5	4.0	ns
Peak Eye Diagram Jitter	$t_{JIT(PK)}$	See Figure 2.3 Eye Diagram on page 7	—	350	—	ps
Common Mode Transient Immunity Si86xxxA/B/C/D Si86xxxT	CMTI	$V_I = V_{DD}$ or 0 V V_{CM} = 1500 V See Figure 4.3 Common-Mode Transient Immunity Test Circuit on page 16	 35 60	 50 100	 — —	kV/µs
Enable to Data Valid	t_{en1}	See Figure 4.1 ENABLE Timing Diagram on page 16	—	6.0	11	ns
Enable to Data Tri-State	t_{en2}	See Figure 4.1 ENABLE Timing Diagram on page 16	—	8.0	12	ns
Input power loss to valid default output	t_{SD}	See Figure 3.1 Device Behavior during Normal Operation on page 10	—	8.0	12	ns
Start-up Time [3]	t_{SU}		—	15	40	µs

Note:

1. The nominal output impedance of an isolator driver channel is approximately 50 Ω, ±40%, which is a combination of the value of the on-chip series termination resistor and channel resistance of the output driver FET. When driving loads where transmission line effects will be a factor, output pins should be appropriately terminated with controlled-impedance PCB traces.
2. $t_{PSK(P-P)}$ is the magnitude of the difference in propagation delay times measured between different units operating at the same supply voltages, load, and ambient temperature.
3. Start-up time is the time period from the application of power to the appearance of valid data at the output.

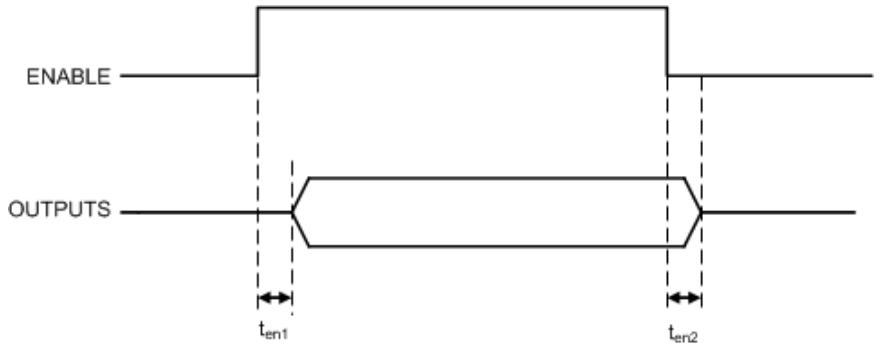

Figure 4.1. ENABLE Timing Diagram

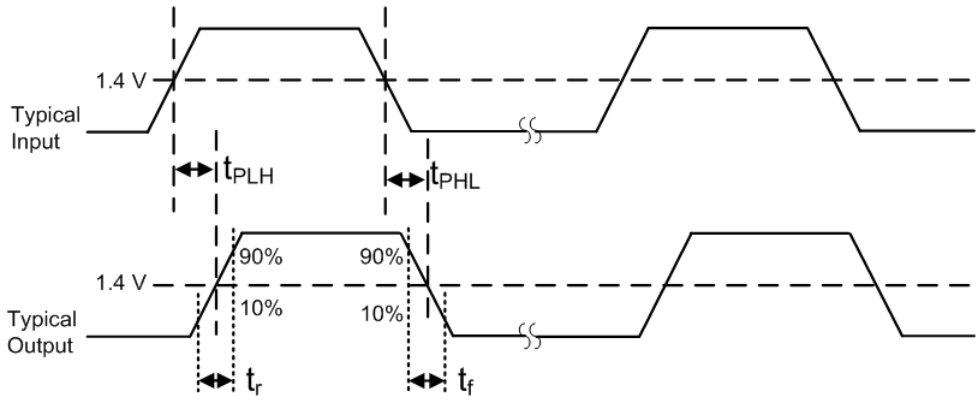

Figure 4.2. Propagation Delay Timing

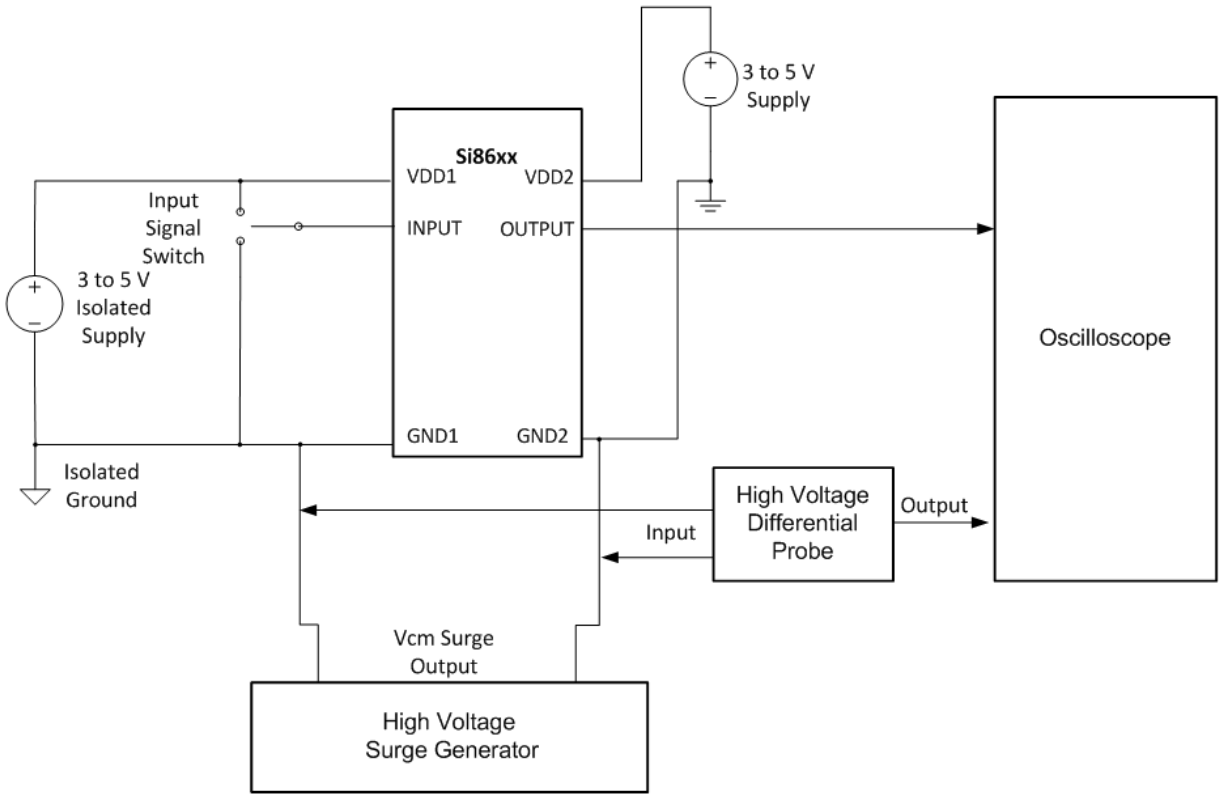

Figure 4.3. Common-Mode Transient Immunity Test Circuit

Table 4.3. Electrical Characteristics

(V_{DD1} = 3.3 V ±10%, V_{DD2} = 3.3 V ±10%, T_A = –40 to 125 °C)

Parameter	Symbol	Test Condition	Min	Typ	Max	Unit
VDD Undervoltage Threshold	VDD_{UV+}	V_{DD1}, V_{DD2} rising	1.95	2.24	2.375	V
VDD Undervoltage Threshold	VDD_{UV-}	V_{DD1}, V_{DD2} falling	1.88	2.16	2.325	V
VDD Undervoltage Hysteresis	VDD_{HYS}		50	70	95	mV
Positive-Going Input Threshold	VT+	All inputs rising	1.4	1.67	1.9	V
Negative-Going Input Threshold	VT–	All inputs falling	1.0	1.23	1.4	V
Input Hysteresis	V_{HYS}		0.38	0.44	0.50	V
High Level Input Voltage	V_{IH}		2.0	—	—	V
Low Level Input Voltage	V_{IL}		—	—	0.8	V
High Level Output Voltage	V_{OH}	Ioh = –4 mA	V_{DD1}, V_{DD2} – 0.4	3.1	—	V
Low Level Output Voltage	V_{OL}	Iol = 4 mA	—	0.2	0.4	V
Input Leakage Current						
Si864xxA/B/C/D	I_L		—	—	±10	µA
Si864xxT			—	—	±15	
Output Impedance [1]	Z_O		—	50	—	Ω
Enable Input Current						
Si864xxA/B/C/D	I_{ENH}, I_{ENL}	V_{ENx} = V_{IH} or V_{IL}	—	2.0	—	µA
Si864xxT			—	10.0	—	
DC Supply Current (All Inputs 0 V or at Supply)						
Si8640Bx, Ex, Si8645Bx						
V_{DD1}		V_I = 0(Bx), 1(Ex)	—	1.0	1.6	mA
V_{DD2}		V_I = 0(Bx), 1(Ex)	—	2.4	3.8	
V_{DD1}		V_I = 1(Bx), 0(Ex)	—	6.1	9.2	
V_{DD2}		V_I = 1(Bx), 0(Ex)	—	2.5	4.0	
Si8641xA/B/C/D						
V_{DD1}		V_I = 0(Bx), 1(Ex)	—	1.4	2.2	mA
V_{DD2}		V_I = 0(Bx), 1(Ex)	—	2.3	3.7	
V_{DD1}		V_I = 1(Bx), 0(Ex)	—	5.2	7.4	
V_{DD2}		V_I = 1(Bx), 0(Ex)	—	3.6	5.4	

Parameter	Symbol	Test Condition	Min	Typ	Max	Unit
Si8641xT						
V_{DD1}		V_I = 0(Bx), 1(Ex)	—	1.4	2.2	mA
V_{DD2}		V_I = 0(Bx), 1(Ex)	—	2.3	3.7	
V_{DD1}		V_I = 1(Bx), 0(Ex)	—	5.2	7.8	
V_{DD2}		V_I = 1(Bx), 0(Ex)	—	3.6	5.4	
Si8642Bx, Ex						
V_{DD1}		V_I = 0(Bx), 1(Ex)	—	1.8	2.9	mA
V_{DD2}		V_I = 0(Bx), 1(Ex)	—	1.8	2.9	
V_{DD1}		V_I = 1(Bx), 0(Ex)	—	4.4	6.6	
V_{DD2}		V_I = 1(Bx), 0(Ex)	—	4.4	6.6	
1 Mbps Supply Current (All Inputs = 500 kHz Square Wave, Cl = 15 pF on All Outputs)						
Si8640Bx, Ex, Si8645Bx						
V_{DD1}			—	3.6	5.0	mA
V_{DD2}			—	2.9	4.0	
Si8641Bx, Ex						
V_{DD1}			—	3.4	4.8	mA
V_{DD2}			—	3.3	4.6	
Si8642Bx, Ex						
V_{DD1}			—	3.3	4.6	mA
V_{DD2}			—	3.3	4.6	
10 Mbps Supply Current (All Inputs = 5 MHz Square Wave, Cl = 15 pF on All Outputs)						
All Si8640xA/B/C/D & Si8645xA/B/C/D						
V_{DD1}			—	3.6	5.0	mA
V_{DD2}			—	3.4	4.7	
Si8640xT & Si8645xT						
V_{DD1}			—	3.6	6.0	mA
V_{DD2}			—	3.4	4.7	
Si8641Bx, Ex						
V_{DD1}			—	3.5	4.9	mA
V_{DD2}			—	3.6	5.1	
Si8642Bx, Ex						
V_{DD1}			—	3.6	5.0	mA
V_{DD2}			—	3.6	5.0	
100 Mbps Supply Current (All Inputs = 50 MHz Square Wave, Cl = 15 pF on All Outputs)						

Parameter	Symbol	Test Condition	Min	Typ	Max	Unit
All Si8640xA/B/C/D & Si8645xA/B/C/D						
V_{DD1}			—	3.6	5.0	mA
V_{DD2}			—	12.3	15.9	
Si8640xT & Si8645xT						
V_{DD1}			—	3.6	6.0	mA
V_{DD2}			—	12.3	15.9	
Si8641Bx, Ex						
V_{DD1}			—	5.9	7.9	mA
V_{DD2}			—	10.3	13.4	
Si8642Bx, Ex						
V_{DD1}			—	8.2	10.7	mA
V_{DD2}			—	8.2	10.7	
Timing Characteristics						
Si864xBx, Ex						
Maximum Data Rate			0	—	150	Mbps
Minimum Pulse Width			—	—	5.0	ns
Propagation Delay	t_{PHL}, t_{PLH}	See Figure 4.2 Propagation Delay Timing on page 16	5.0	8.0	13	ns
Pulse Width Distortion |tPLH – tPHL|	PWD	See Figure 4.2 Propagation Delay Timing on page 16	—	0.2	4.5	ns
Propagation Delay Skew [2]	$t_{PSK(P-P)}$		—	2.0	4.5	ns
Channel-Channel Skew	t_{PSK}		—	0.4	2.5	ns
All Models						
Output Rise Time	t_r	C_L = 15 pF See Figure 4.2 Propagation Delay Timing on page 16	—	2.5	4.0	ns
Output Fall Time	t_f	C_L = 15 pF See Figure 4.2 Propagation Delay Timing on page 16	—	2.5	4.0	ns
Peak Eye Diagram Jitter	$t_{JIT(PK)}$	See Figure 2.3 Eye Diagram on page 7	—	350	—	ps
Common Mode Transient Immunity Si86xxxA/B/C/D Si86xxxT	CMTI	$V_I = V_{DD}$ or 0 V V_{CM} = 1500 V See Figure 4.3 Common-Mode Transient Immunity Test Circuit on page 16	 35 60	 50 100	 — —	kV/µs
Enable to Data Valid	t_{en1}	See Figure 4.1 ENABLE Timing Diagram on page 16	—	6.0	11	ns

Parameter	Symbol	Test Condition	Min	Typ	Max	Unit
Enable to Data Tri-State	t_{en2}	See Figure 4.1 ENABLE Timing Diagram on page 16	—	8.0	12	ns
Input power loss to valid default output	t_{SD}	See Figure 3.1 Device Behavior during Normal Operation on page 10	—	8.0	12	ns
Start-up Time [3]	t_{SU}		—	15	40	µs

Note:

1. The nominal output impedance of an isolator driver channel is approximately 50 Ω, ±40%, which is a combination of the value of the on-chip series termination resistor and channel resistance of the output driver FET. When driving loads where transmission line effects will be a factor, output pins should be appropriately terminated with controlled-impedance PCB traces.
2. $t_{PSK(P-P)}$ is the magnitude of the difference in propagation delay times measured between different units operating at the same supply voltages, load, and ambient temperature.
3. Start-up time is the time period from the application of power to the appearance of valid data at the output.

Table 4.4. Electrical Characteristics

(V_{DD1} = 2.5 V ±5%, V_{DD2} = 2.5 V ±5%, T_A = –40 to 125 °C)

Parameter	Symbol	Test Condition	Min	Typ	Max	Unit
VDD Undervoltage Threshold	VDD_{UV+}	V_{DD1}, V_{DD2} rising	1.95	2.24	2.375	V
VDD Undervoltage Threshold	VDD_{UV-}	V_{DD1}, V_{DD2} falling	1.88	2.16	2.325	V
VDD Undervoltage Hysteresis	VDD_{HYS}		50	70	95	mV
Positive-Going Input Threshold	VT+	All inputs rising	1.4	1.67	1.9	V
Negative-Going Input Threshold	VT–	All inputs falling	1.0	1.23	1.4	V
Input Hysteresis	V_{HYS}		0.38	0.44	0.50	V
High Level Input Voltage	V_{IH}		2.0	—	—	V
Low Level Input Voltage	V_{IL}		—	—	0.8	V
High Level Output Voltage	V_{OH}	Ioh = –4 mA	V_{DD1}, V_{DD2} – 0.4	2.3	—	V
Low Level Output Voltage	V_{OL}	Iol = 4 mA	—	0.2	0.4	V
Input Leakage Current						
Si864xxA/B/C/D	I_L		—	—	±10	µA
Si864xxT			—	—	±15	
Output Impedance[1]	Z_O		—	50	—	Ω
Enable Input Current						
Si864xxA/B/C/D	I_{ENH}, I_{ENL}	V_{ENx} = V_{IH} or V_{IL}	—	2.0	—	µA
Si864xxT			—	10.0	—	
DC Supply Current (All Inputs 0 V or at Supply)						
Si8640Bx, Ex, Si8645Bx						
V_{DD1}		V_I = 0(Bx), 1(Ex)	—	1.0	1.6	mA
V_{DD2}		V_I = 0(Bx), 1(Ex)	—	2.4	3.8	
V_{DD1}		V_I = 1(Bx), 0(Ex)	—	6.1	9.2	
V_{DD2}		V_I = 1(Bx), 0(Ex)	—	2.5	4.0	
Si8641xA/B/C/D						
V_{DD1}		V_I = 0(Bx), 1(Ex)	—	1.4	2.2	mA
V_{DD2}		V_I = 0(Bx), 1(Ex)	—	2.3	3.7	
V_{DD1}		V_I = 1(Bx), 0(Ex)	—	5.2	7.4	
V_{DD2}		V_I = 1(Bx), 0(Ex)	—	3.6	5.4	

Parameter	Symbol	Test Condition	Min	Typ	Max	Unit
Si8641xT						
V_{DD1}		V_I = 0(Bx), 1(Ex)	—	1.4	2.2	mA
V_{DD2}		V_I = 0(Bx), 1(Ex)	—	2.3	3.7	
V_{DD1}		V_I = 1(Bx), 0(Ex)	—	5.2	7.8	
V_{DD2}		V_I = 1(Bx), 0(Ex)	—	3.6	5.4	
Si8642Bx, Ex						
V_{DD1}		V_I = 0(Bx), 1(Ex)	—	1.8	2.9	mA
V_{DD2}		V_I = 0(Bx), 1(Ex)	—	1.8	2.9	
V_{DD1}		V_I = 1(Bx), 0(Ex)	—	4.4	6.6	
V_{DD2}		V_I = 1(Bx), 0(Ex)	—	4.4	6.6	
1 Mbps Supply Current (All Inputs = 500 kHz Square Wave, Cl = 15 pF on All Outputs)						
Si8640Bx, Ex, Si8645Bx						
V_{DD1}			—	3.6	5.0	mA
V_{DD2}			—	2.9	4.0	
Si8641Bx, Ex						
V_{DD1}			—	3.4	4.8	mA
V_{DD2}			—	3.3	4.6	
Si8642Bx, Ex						
V_{DD1}			—	3.3	4.6	mA
V_{DD2}			—	3.3	4.6	
10 Mbps Supply Current (All Inputs = 5 MHz Square Wave, Cl = 15 pF on All Outputs)						
All Si8640xA/B/C/D & Si8645xA/B/C/D						
V_{DD1}			—	3.6	5.0	mA
V_{DD2}			—	3.1	4.3	
Si8640xT & Si8645xT						
V_{DD1}			—	3.6	6.0	mA
V_{DD2}			—	3.1	4.3	
Si8641Bx, Ex						
V_{DD1}			—	3.5	4.8	mA
V_{DD2}			—	3.4	4.8	
Si8642Bx, Ex						
V_{DD1}			—	3.4	4.8	mA
V_{DD2}			—	3.4	4.8	
100 Mbps Supply Current (All Inputs = 50 MHz Square Wave, Cl = 15 pF on All Outputs)						

Parameter	Symbol	Test Condition	Min	Typ	Max	Unit
All Si8640xA/B/C/D & Si8645xA/B/C/D						
V_{DD1}			—	3.6	5.0	mA
V_{DD2}			—	9.9	12.8	
Si8640xT & Si8645xT						
V_{DD1}			—	3.6	6.0	mA
V_{DD2}			—	9.9	12.8	
Si8641Bx, Ex						
V_{DD1}			—	5.2	7.0	mA
V_{DD2}			—	8.5	11.1	
Si8642Bx, Ex						
V_{DD1}			—	6.9	9.0	mA
V_{DD2}			—	6.9	9.0	
Timing Characteristics						
Si864xBx, Ex						
Maximum Data Rate			0	—	150	Mbps
Minimum Pulse Width			—	—	5.0	ns
Propagation Delay	t_{PHL}, t_{PLH}	See Figure 4.2 Propagation Delay Timing on page 16	5.0	8.0	14	ns
Pulse Width Distortion |tPLH -tPHL|	PWD	See Figure 4.2 Propagation Delay Timing on page 16	—	0.2	5.0	ns
Propagation Delay Skew [2]	$t_{PSK(P-P)}$		—	2.0	5.0	ns
Channel-Channel Skew	t_{PSK}		—	0.4	2.5	ns
All Models						
Output Rise Time	t_r	C_L = 15 pF See Figure 4.2 Propagation Delay Timing on page 16	—	2.5	4.0	ns
Output Fall Time	t_f	C_L = 15 pF See Figure 4.2 Propagation Delay Timing on page 16	—	2.5	4.0	ns
Peak Eye Diagram Jitter	$t_{JIT(PK)}$	See Figure 2.3 Eye Diagram on page 7	—	350	—	ps
Common Mode Transient Immunity Si86xxxA/B/C/D Si86xxxT	CMTI	$V_I = V_{DD}$ or 0 V V_{CM} = 1500 V See Figure 4.3 Common-Mode Transient Immunity Test Circuit on page 16	 35 60	 50 100	 — —	kV/µs
Enable to Data Valid	t_{en1}	See Figure 4.1 ENABLE Timing Diagram on page 16	—	6.0	11	ns

Parameter	Symbol	Test Condition	Min	Typ	Max	Unit
Enable to Data Tri-State	t_{en2}	See Figure 4.1 ENABLE Timing Diagram on page 16	—	8.0	12	ns
Input power loss to valid default output	t_{SD}	See Figure 3.1 Device Behavior during Normal Operation on page 10	—	8.0	12	ns
Start-up Time [3]	t_{SU}		—	15	40	µs

Note:

1. The nominal output impedance of an isolator driver channel is approximately 50 Ω, ±40%, which is a combination of the value of the on-chip series termination resistor and channel resistance of the output driver FET. When driving loads where transmission line effects will be a factor, output pins should be appropriately terminated with controlled-impedance PCB traces.
2. $t_{PSK(P-P)}$ is the magnitude of the difference in propagation delay times measured between different units operating at the same supply voltages, load, and ambient temperature.
3. Start-up time is the time period from the application of power to the appearance of valid data at the output.

Table 4.5. Regulatory Information[1]

CSA
The Si864x is certified under CSA Component Acceptance Notice 5A. For more details, see Master Contract Number 232873.
60950-1, 62368-1: Up to 600 V_{RMS} reinforced insulation working voltage; up to 1000 V_{RMS} basic insulation working voltage.
60601-1: Up to 250 V_{RMS} working voltage and 2 MOPP (Means of Patient Protection).
VDE
The Si864x is certified according to VDE 0884-10. For more details, see certificates 40018443, 40037519.
0884-10: Up to 1200 Vpeak for basic insulation working voltage.
60950-1: Up to 600 V_{RMS} reinforced insulation working voltage; up to 1000 V_{RMS} basic insulation working voltage.
UL
The Si864x is certified under UL1577 component recognition program. For more details, see File E257455.
Rated up to 5000 V_{RMS} isolation voltage for basic protection.
CQC
The Si864x is certified under GB4943.1-2011. For more details, see certificates CQC13001096110 and CQC13001096239.
Rated up to 600 V_{RMS} reinforced insulation working voltage; up to 1000 V_{RMS} basic insulation working voltage.

Note:

1. Regulatory Certifications apply to 2.5 kV_{RMS} rated devices which are production tested to 3.0 kV_{RMS} for 1 sec. Regulatory Certifications apply to 3.75 kV_{RMS} rated devices which are production tested to 4.5 kV_{RMS} for 1 sec. Regulatory Certifications apply to 5.0 kV_{RMS} rated devices which are production tested to 6.0 kV_{RMS} for 1 sec.
   For more information, see 1. Ordering Guide.

Table 4.6. Insulation and Safety-Related Specifications

Parameter	Symbol	Test Condition	Value			Unit
			WB SOIC-16	NB SOIC-16	QSOP-16	
Nominal External Air Gap (Clearance) [1]	CLR		8.0	4.9	3.6	mm
Nominal External Tracking (Creepage) [1]	CPG		8.0	4.01	3.6	mm
Minimum Internal Gap (Internal Clearance)	DTI		0.014	0.014	0.014	mm
Tracking Resistance	CTI or PTI	IEC60112	600	600	600	V_{RMS}
Erosion Depth	ED		0.019	0.019	0.031	mm
Resistance (Input-Output) [2]	R_{IO}		10^{12}	10^{12}	10^{12}	Ω
Capacitance (Input-Output) [2]	C_{IO}	f = 1 MHz	2.0	2.0	2.0	pF
Input Capacitance [3]	C_I		4.0	4.0	4.0	pF

Note:

1. The values in this table correspond to the nominal creepage and clearance values. VDE certifies the clearance and creepage limits as 4.7 mm minimum for the NB SOIC-16 package and QSOP-16 packages and 8.5 mm minimum for the WB SOIC-16 package. UL does not impose a clearance and creepage minimum for component-level certifications. CSA certifies the clearance and creepage of the WB SOIC-16 package with designation "IS2" as 8 mm minimum. CSA certifies the clearance and creepage limits as 3.9 mm minimum for the NB SOIC 16, 3.6 mm minimum for the QSOP-16, and 7.6 mm minimum for the WB SOIC-16 package with package designation "IS" as listed in the data sheet.
2. To determine resistance and capacitance, the Si86xx is converted into a 2-terminal device. Pins 1–8 are shorted together to form the first termina and pins 9–16 are shorted together to form the second terminal. The parameters are then measured between these two terminals.
3. Measured from input pin to ground.

Table 4.7. IEC 60664-1 Ratings

Parameter	Test Conditions	Specification		
		WB SOIC-16	NB SOIC-16	QSOP-16
Basic Isolation Group	Material Group	I	I	I
Installation Classification	Rated Mains Voltages ≤ 150 V_{RMS}	I-IV	I-IV	I-IV
	Rated Mains Voltages ≤ 300 V_{RMS}	I-IV	I-III	I-III
	Rated Mains Voltages ≤ 400 V_{RMS}	I-III	I-II	I-II
	Rated Mains Voltages ≤ 600 V_{RMS}	I-III	I-II	I-II

Table 4.8. VDE 0884-10 Insulation Characteristics for Si86xx [1]

Parameter	Symbol	Test Condition	Characteristic			Unit
			WB SOIC-16	NB SOIC-16	QSOP-16	
Maximum Working Insulation Voltage	V_{IORM}		1200	630	630	Vpeak
Input to Output Test Voltage	V_{PR}	Method b1 (V_{IORM} x 1.875 = VPR, 100% Production Test, t_m = 1 sec, Partial Discharge < 5 pC)	2250	1182	1182	Vpeak
Transient Overvoltage (Si86xxxA/B/C/D)	V_{IOTM}	t = 60 sec	6000	6000	6000	Vpeak
Transient Overvoltage (Si86xxxT)			8000	8000	8000	
Surge Voltage	V_{IOSM}	Tested per IEC 60065 with surge voltage of 1.2 µs/50 µs Si864xxT tested with magnitude 6250 V x 1.6 = 10 kV Si864xxB/C/D tested with 4000 V	6250 3077	— 3077	— 3077	Vpeak
Pollution Degree (DIN VDE 0110, Table 1)			2	2	2	
Insulation Resistance at T_S, V_{IO} = 500 V	R_S		$>10^9$	$>10^9$	$>10^9$	Ω

Note:
1. Maintenance of the safety data is ensured by protective circuits. The Si86xx provides a climate classification of 40/125/21.

Table 4.9. VDE 0884-10 Safety Limiting Values [1]

Parameter	Symbol	Test Condition	Max			Unit
			WB SOIC-16	NB SOIC-16	QSOP-16	
Case Temperature	T_S		150	150	150	°C
Safety Input, Output, or Supply Current	I_S	θ_{JA} = 100 °C/W (WB SOIC-16) 105 °C/W (NB SOIC-16, QSOP-16) V_I = 5.5 V, T_J = 150 °C, T_A = 25 °C	220	210	210	mA
Device Power Dissipation [2]	P_D		275	275	275	mW

Note:
1. Maximum value allowed in the event of a failure; also see the thermal derating curve in Figure 4.4 (WB SOIC-16) Thermal Derating Curve, Dependence of Safety Limiting Values with Case Temperature per VDE 0884-10 on page 27 and Figure 4.5 (NB SOIC-16, QSOP-16) Thermal Derating Curve, Dependence of Safety Limiting Values with Case Temperature per VDE 0884-10 on page 27.
2. The Si86xx is tested with VDD1 = VDD2 = 5.5 V; T_J = 150 ºC; C_L = 15 pF, input a 150 Mbps 50% duty cycle square wave.

Table 4.10. Thermal Characteristics

Parameter	Symbol	WB SOIC-16	NB SOIC-16/QSOP-16	Unit
IC Junction-to-Air Thermal Resistance	θ_{JA}	100	105	°C/W

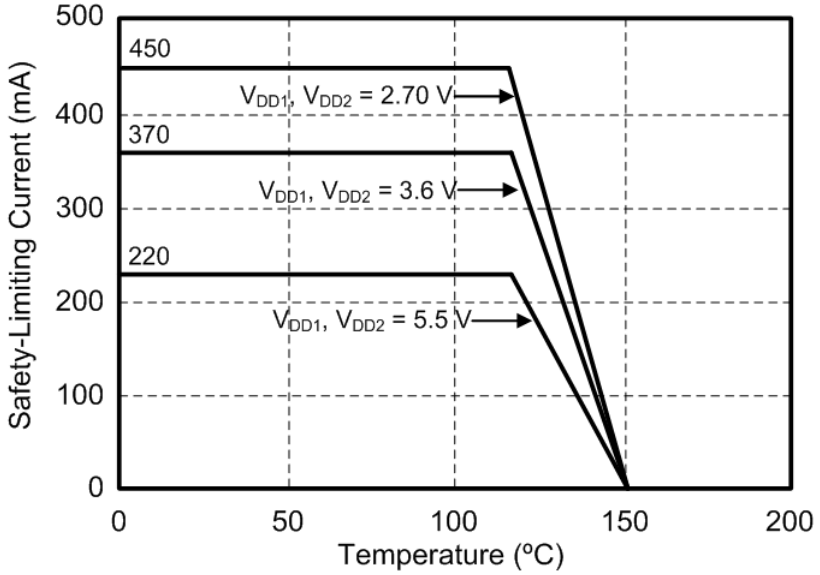

Figure 4.4. (WB SOIC-16) Thermal Derating Curve, Dependence of Safety Limiting Values with Case Temperature per VDE 0884-10

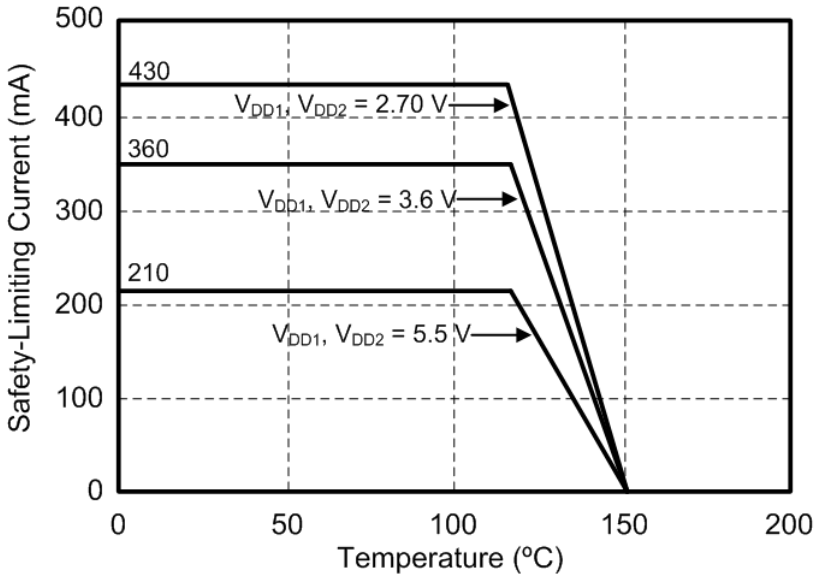

Figure 4.5. (NB SOIC-16, QSOP-16) Thermal Derating Curve, Dependence of Safety Limiting Values with Case Temperature per VDE 0884-10

Table 4.11. Absolute Maximum Ratings [1]

Parameter	Symbol	Min	Max	Unit
Storage Temperature [2]	T_{STG}	–65	150	°C
Operating Temperature	T_A	–40	125	°C
Junction Temperature	T_J	—	150	°C
Supply Voltage	V_{DD1}, V_{DD2}	–0.5	7.0	V
Input Voltage	V_I	–0.5	V_{DD} + 0.5	V
Output Voltage	V_O	–0.5	V_{DD} + 0.5	V
Output Current Drive Channel	I_O	—	10	mA
Lead Solder Temperature (10 s)		—	260	°C
Maximum Isolation (Input to Output) (1 sec) NB SOIC-16, QSOP-16		—	4500	V_{RMS}
Maximum Isolation (Input to Output) (1 sec) WB SOIC-16		—	6500	V_{RMS}

Note:

1. Permanent device damage may occur if the absolute maximum ratings are exceeded. Functional operation should be restricted to conditions as specified in the operational sections of this data sheet. Exposure to absolute maximum ratings for exteneded periods may degrade performance.
2. VDE certifies storage temperature from –40 to 150 °C.

5. Pin Descriptions

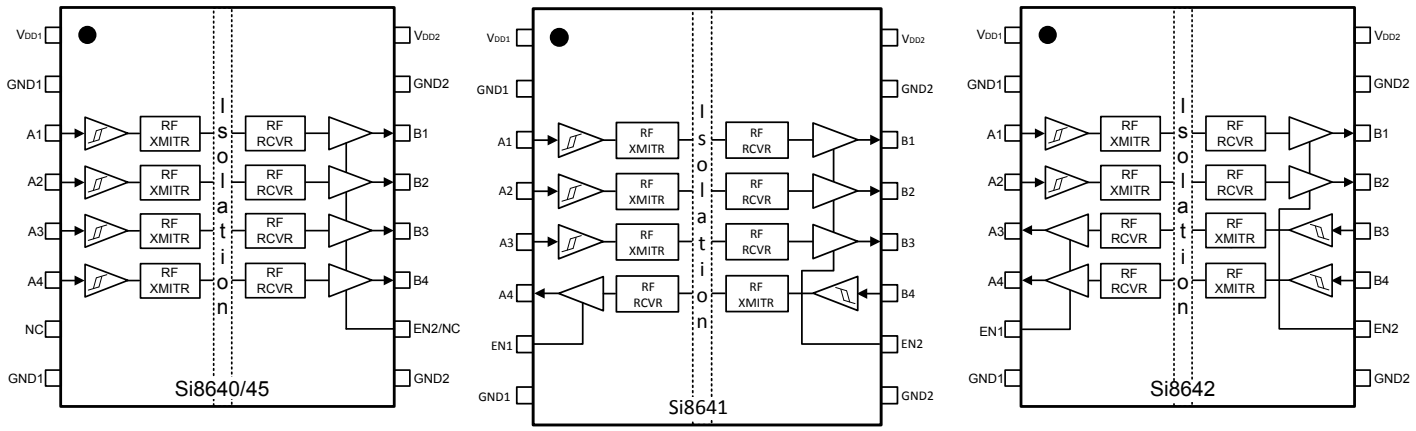

Name	SOIC-16 Pin#	Type	Description
V_{DD1}	1	Supply	Side 1 power supply.
GND1	2[1]	Ground	Side 1 ground.
A1	3	Digital Input	Side 1 digital input.
A2	4	Digital Input	Side 1 digital input.
A3	5	Digital I/O	Side 1 digital input or output.
A4	6	Digital I/O	Side 1 digital input or output.
EN1/NC[2]	7	Digital Input	Side 1 active high enable. NC on Si8640/45.
GND1	8[1]	Ground	Side 1 ground.
GND2	9[1]	Ground	Side 2 ground.
EN2/NC[2]	10	Digital Input	Side 2 active high enable. NC on Si8645.
B4	11	Digital I/O	Side 2 digital input or output.
B3	12	Digital I/O	Side 2 digital input or output.
B2	13	Digital Output	Side 2 digital output.
B1	14	Digital Output	Side 2 digital output.
GND2	15[1]	Ground	Side 2 ground.
V_{DD2}	16	Supply	Side 2 power supply.

Note:

1. For narrow-body devices, Pin 2 and Pin 8 GND must be externally connected to respective ground. Pin 9 and Pin 15 must also be connected to external ground.
2. No Connect. These pins are not internally connected. They can be left floating, tied to VDD or tied to GND.

6. Package Outline (16-Pin Wide Body SOIC, -IS and -IS2 Package Option)

The figure below illustrates the package details for the the Si86xx digital isolator in a 16-pin wide-body SOIC package. The table lists the values for the dimensions shown in the illustration.

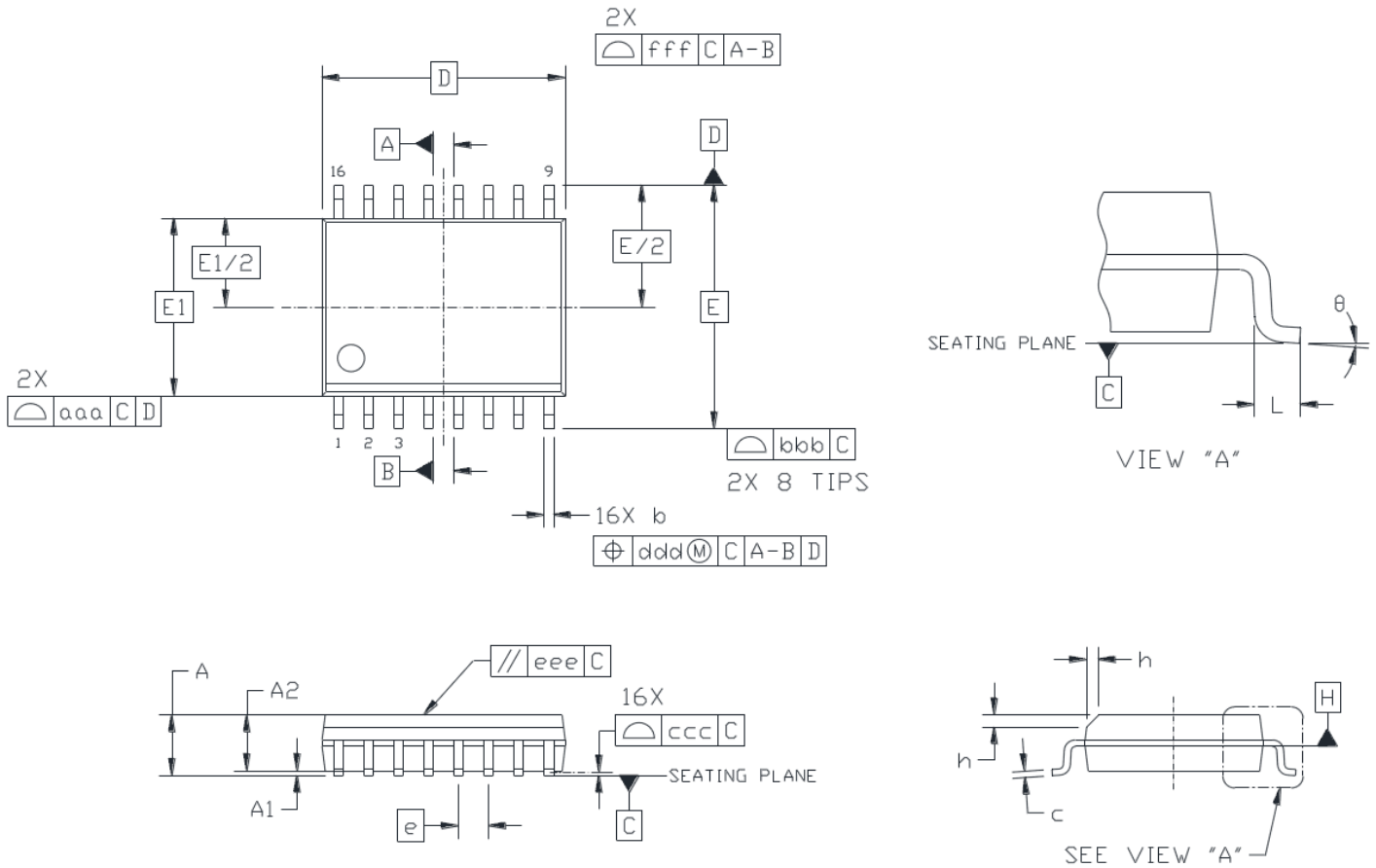

Figure 6.1. 16-Pin Wide Body SOIC

Table 6.1. 16-Pin Wide Body SOIC (-IS and -IS2 Package Option) Package Diagram Dimensions

Dimension	Min	Max
A	—	2.65
A1	0.10	0.30
A2	2.05	—
b	0.31	0.51
c	0.20	0.33
D	10.30 BSC	
E	10.30 BSC	
E1	7.50 BSC	
e	1.27 BSC	
L	0.40	1.27
h	0.25	0.75
θ	0°	8°
aaa	—	0.10
bbb	—	0.33
ccc	—	0.10
ddd	—	0.25
eee	—	0.10
fff	—	0.20

Note:

1. All dimensions shown are in millimeters (mm) unless otherwise noted.
2. Dimensioning and Tolerancing per ANSI Y14.5M-1994.
3. This drawing conforms to JEDEC Outline MS-013, Variation AA.
4. Recommended reflow profile per JEDEC J-STD-020 specification for small body, lead-free components.

7. Land Pattern (16-Pin Wide Body SOIC, -IS Package Options)

The figure below illustrates the recommended land pattern details for the Si86xx in a 16-pin wide-body SOIC package. The table lists the values for the dimensions shown in the illustration.

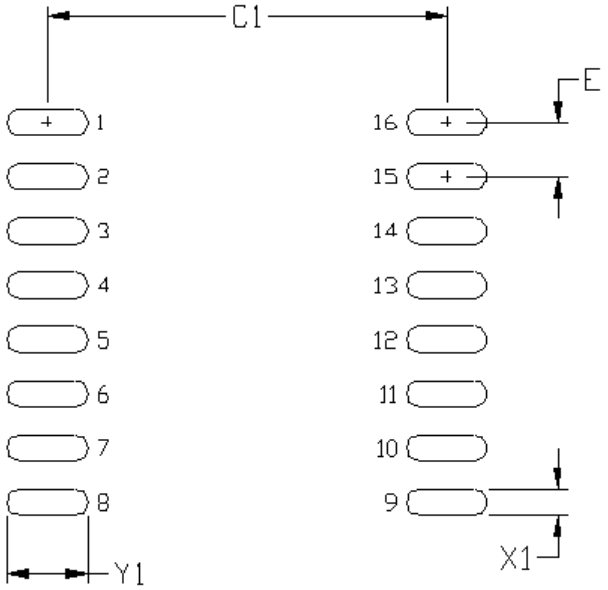

Figure 7.1. 16-Pin Wide Body SOIC PCB Land Pattern

Table 7.1. 16-Pin Wide Body SOIC Land Pattern Dimensions

Dimension	Feature	(mm)
C1	Pad Column Spacing	9.40
E	Pad Row Pitch	1.27
X1	Pad Width	0.60
Y1	Pad Length	1.90

Note:

1. This Land Pattern Design is based on IPC-7351 pattern SOIC127P1032X265-16AN for Density Level B (Median Land Protrusion).
2. All feature sizes shown are at Maximum Material Condition (MMC) and a card fabrication tolerance of 0.05 mm is assumed.

8. Land Pattern (16-Pin Wide Body SOIC, -IS2 Package Options)

The figure below illustrates the recommended land pattern details for the Si86xx in a 16-pin wide-body SOIC package. The table lists the values for the dimensions shown in the illustration.

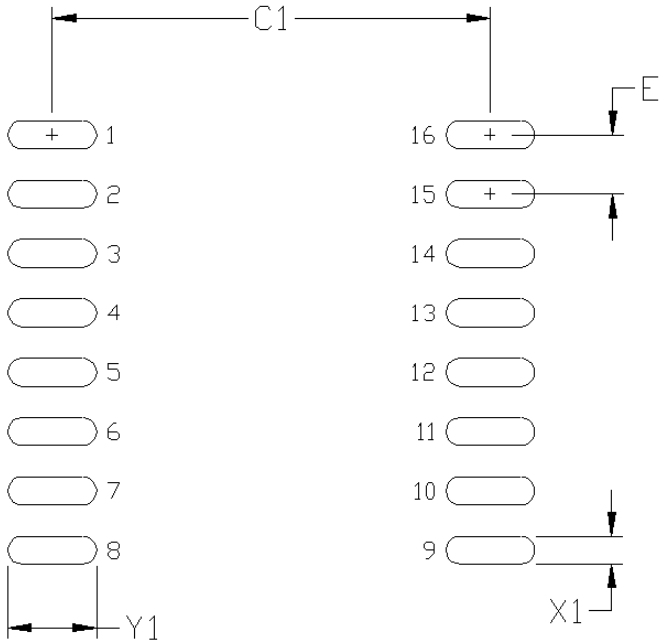

Figure 8.1. 16-Pin Wide Body SOIC PCB Land Pattern

Table 8.1. 16-Pin Wide Body SOIC (-IS2 Package Option) Land Pattern Dimensions

Dimension	Feature	(mm)
C1	Pad Column Spacing	9.80
E	Pad Row Pitch	1.27
X1	Pad Width	0.60
Y1	Pad Length	1.60

Note:

1. This Land Pattern Design is based on IPC-7351 pattern SOIC127P1032X265-16AN for Density Level B (Median Land Protrusion).
2. All feature sizes shown are at Maximum Material Condition (MMC) and a card fabrication tolerance of 0.05 mm is assumed.

9. Package Outline (16-Pin Narrow Body SOIC)

The figure below illustrates the package details for the Si86xx in a 16-pin narrow-body SOIC package. The table lists the values for the dimensions shown in the illustration.

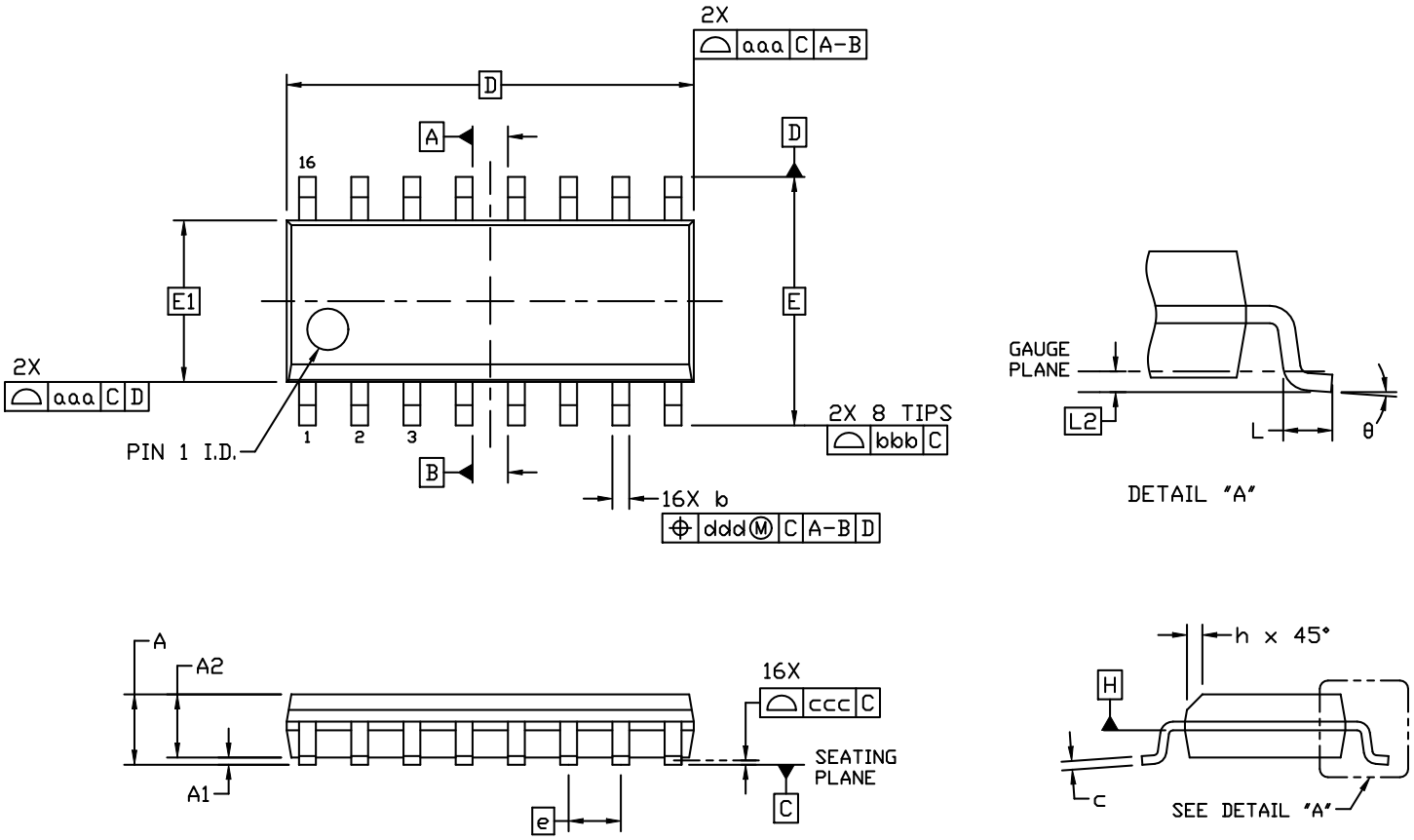

Figure 9.1. 16-Pin Narrow Body SOIC

Table 9.1. 16-Pin Narrow Body SOIC Package Diagram Dimensions

Dimension	Min	Max
A	—	1.75
A1	0.10	0.25
A2	1.25	—
b	0.31	0.51
c	0.17	0.25
D	9.90 BSC	
E	6.00 BSC	
E1	3.90 BSC	
e	1.27 BSC	
L	0.40	1.27
L2	0.25 BSC	
h	0.25	0.50
θ	0°	8°
aaa	0.10	
bbb	0.20	
ccc	0.10	
ddd	0.25	

1. All dimensions shown are in millimeters (mm) unless otherwise noted.
2. Dimensioning and Tolerancing per ANSI Y14.5M-1994.
3. This drawing conforms to the JEDEC Solid State Outline MS-012, Variation AC.
4. Recommended card reflow profile is per the JEDEC/IPC J-STD-020 specification for Small Body Components.

10. Land Pattern (16-Pin Narrow Body SOIC)

The figure below illustrates the recommended land pattern details for the Si86xx in a 16-pin narrow-body SOIC package. The table lists the values for the dimensions shown in the illustration.

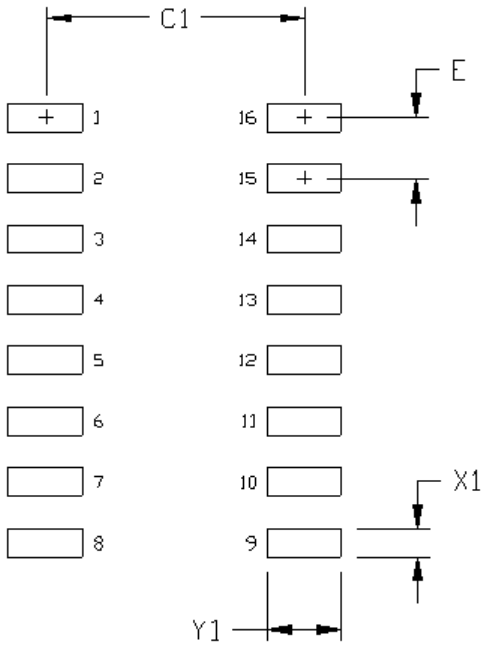

Figure 10.1. 16-Pin Narrow Body SOIC PCB Land Pattern

Table 10.1. 16-Pin Narrow Body SOIC Land Pattern Dimensions[1, 2]

Dimension	Feature	(mm)
C1	Pad Column Spacing	5.40
E	Pad Row Pitch	1.27
X1	Pad Width	0.60
Y1	Pad Length	1.55

Note:

1. This Land Pattern Design is based on IPC-7351 pattern SOIC127P600X165-16N for Density Level B (Median Land Protrusion).
2. All feature sizes shown are at Maximum Material Condition (MMC) and a card fabrication tolerance of 0.05 mm is assumed.

11. Package Outline (16-Pin QSOP)

The figure below illustrates the package details for the Si86xx in a 16-pin QSOP package. The table lists the values for the dimensions shown in the illustration.

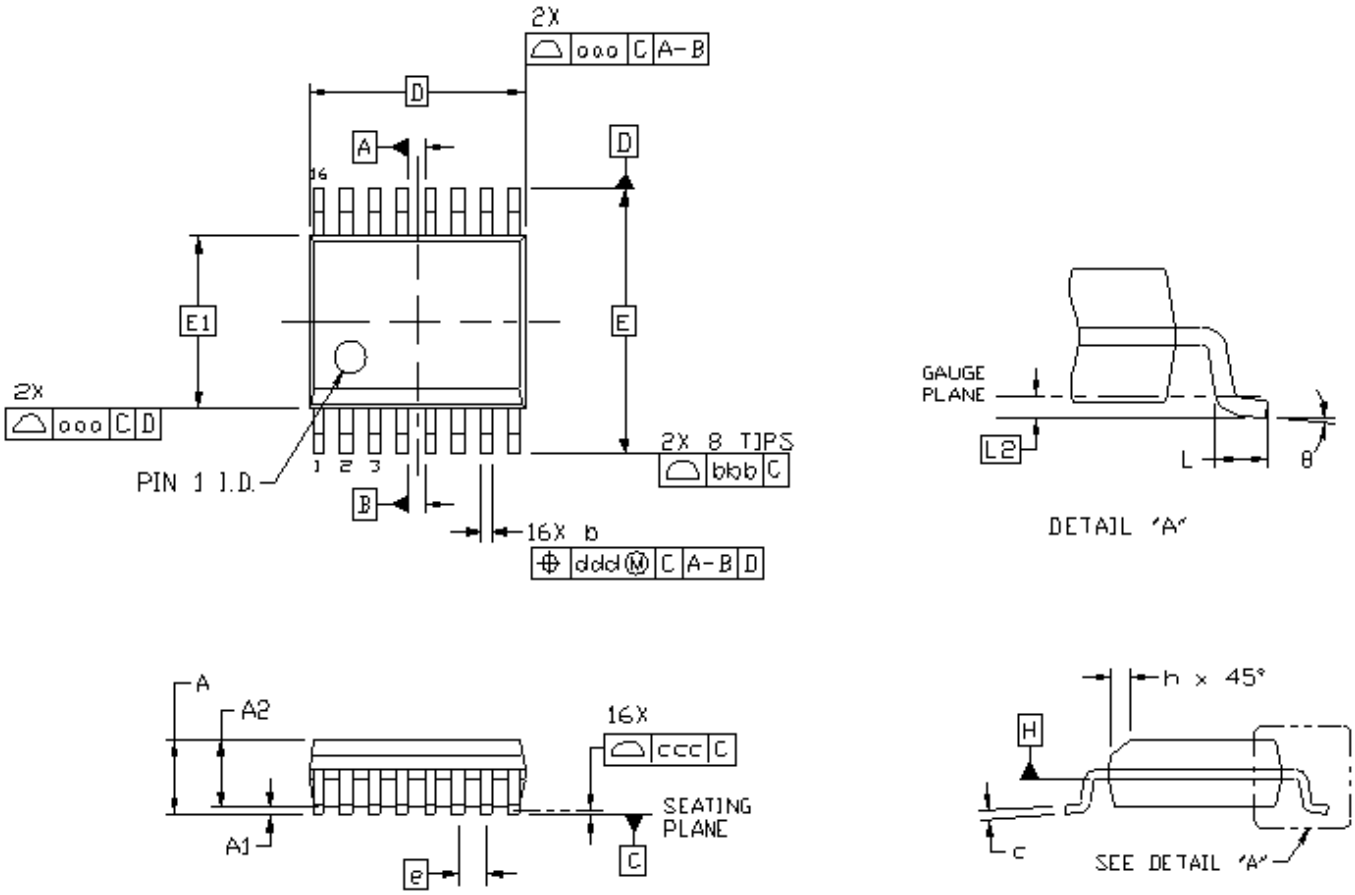

Figure 11.1. 16-Pin QSOP Package

Table 11.1. 16-Pin QSOP Package Diagram Dimensions[1, 2, 3, 4]

Dimension	Min	Max
A	—	1.75
A1	0.10	0.25
A2	1.25	—
b	0.20	0.30
c	0.17	0.25
D	4.89 BSC	
E	6.00 BSC	
E1	3.90 BSC	
e	0.635 BSC	
L	0.40	1.27
L2	0.25 BSC	
h	0.25	0.50
θ	0°	8°
aaa	0.10	
bbb	0.20	
ccc	0.10	
ddd	0.25	

Note:

1. All dimensions shown are in millimeters (mm) unless otherwise noted.
2. Dimensioning and Tolerancing per ANSI Y14.5M-1994.
3. This drawing conforms to the JEDEC Solid State Outline MO-137, Variation AB.
4. Recommended card reflow profile is per the JEDEC/IPC J-STD-020 specification for Small Body Components.

12. Land Pattern (16-Pin QSOP)

The figure below illustrates the recommended land pattern details for the Si86xx in a 16-pin QSOP package. The table lists the values for the dimensions shown in the illustration.

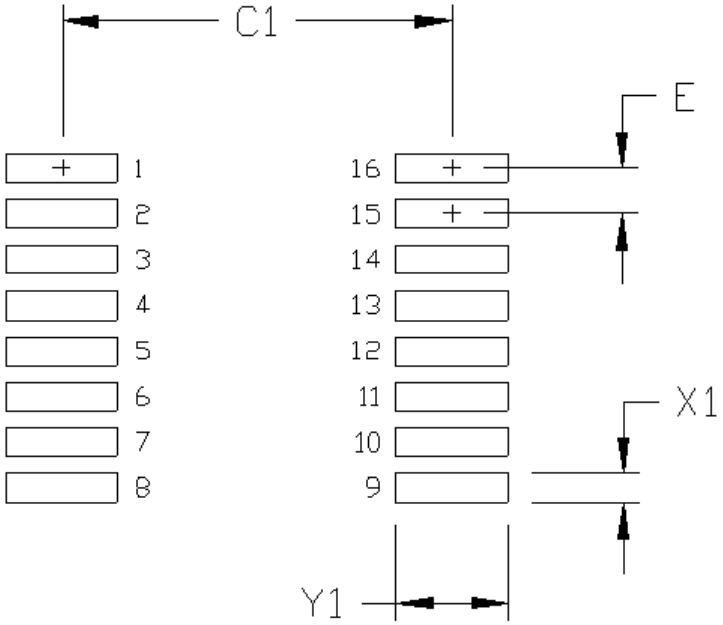

Figure 12.1. 16-Pin QSOP PCB Land Pattern

Table 12.1. 16-Pin QSOP Land Pattern Dimensions[1, 2]

Dimension	Feature	(mm)
C1	Pad Column Spacing	5.40
E	Pad Row Pitch	0.635
X1	Pad Width	0.40
Y1	Pad Length	1.55

Note:

1. This Land Pattern Design is based on IPC-7351 pattern SOP63P602X173-16N for Density Level B (Median Land Protrusion).
2. All feature sizes shown are at Maximum Material Condition (MMC) and a card fabrication tolerance of 0.05 mm is assumed.

13. Top Marking (16-Pin Wide Body SOIC, -IS and -IS2 Package Options)

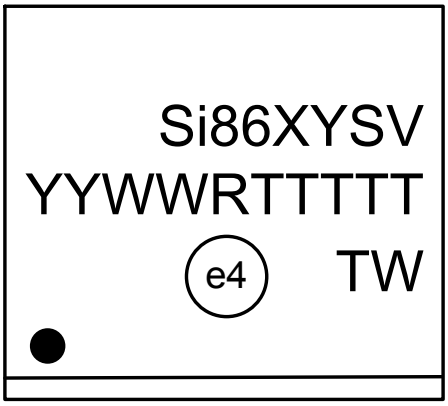

Figure 13.1. 16-Pin Wide Body SOIC Top Marking

Table 13.1. 16-Pin Wide Body SOIC Top Marking Explanation

Line 1 Marking:	Base Part Number Ordering Options (See 1. Ordering Guide for more information).	Si86 = Isolator product series XY = Channel Configuration X = # of data channels (4) Y = # of reverse channels (5, 2, 1, 0)[1] S = Speed Grade (max data rate) and operating mode: B = 150 Mbps (default output = low) E = 150 Mbps (default output = high) V = Insulation rating A = 1 kV; B = 2.5 kV; C = 3.75 kV; D = 5.0 kV; T = 5.0 kV with 10 kV surge capability.
Line 2 Marking:	YY = Year WW = Workweek	Assigned by assembly subcontractor. Corresponds to the year and workweek of the mold date.
	RTTTTT = Mfg Code	Manufacturing code from assembly house. “R” indicates revision.
Line 3Marking:	Circle = 1.7 mm Diameter (Center-Justified)	“e4” Pb-Free Symbol.
	Country of Origin ISO Code Abbreviation	TW = Taiwan as shown, TH = Thailand

Note:
1. Si8645 has 0 reverse channels.

14. Top Marking (16-Pin Narrow Body SOIC)

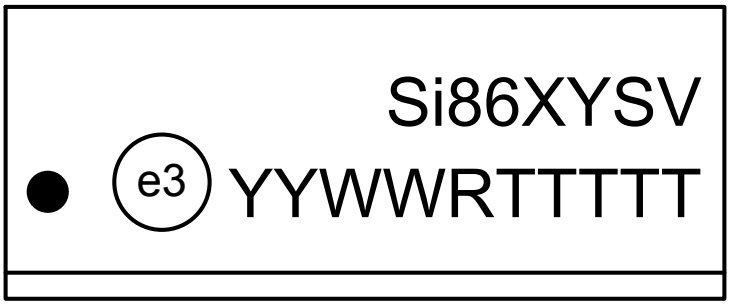

Figure 14.1. 16-Pin Narrow Body SOIC Top Marking

Table 14.1. 16-Pin Narrow Body SOIC Top Marking Explanation

Line 1 Marking:	Base Part Number Ordering Options (See 1. Ordering Guide for more information).	Si86 = Isolator product series XY = Channel Configuration X = # of data channels (4) Y = # of reverse channels (5, 2, 1, 0)[1] S = Speed Grade (max data rate) and operating mode: B = 150 Mbps (default output = low) E = 150 Mbps (default output = high) V = Insulation rating A = 1 kV; B = 2.5 kV; C = 3.75 kV
Line 2 Marking:	Circle = 1.2 mm Diameter	“e3” Pb-Free Symbol
	YY = Year WW = Work Week	Assigned by the assembly subcontractor. Corresponds to the year and work week of the mold date.
	RTTTTT = Mfg Code	Manufacturing code from assembly house. “R” indicates revision.

Note:
1. Si8645 has 0 reverse channels.

15. Top Marking (16-Pin QSOP)

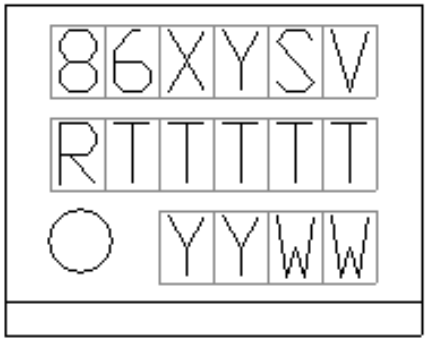

Figure 15.1. 16-Pin QSOP Top Marking

Table 15.1. 16-Pin QSOP Top Marking Explanation

Line 1 Marking:	Base Part Number Ordering Options (See 1. Ordering Guide for more information.)	86 = Isolator product series XY = Channel Configuration X = # of data channels (4) Y = # of reverse channels (5, 2, 1, 0)[1] S = Speed Grade (max data rate) and operating mode: B = 150 Mbps (default output = low) E = 150 Mbps (default output = high) V = Insulation rating. A = 1 kV; B = 2.5 kV; C = 3.75 kV
Line 2 Marking:	RTTTTT = Mfg Code	Manufacturing code from assembly house. “R” indicates revision.
Line 3 Marking:	YY = Year WW = Work Week	Assigned by the Assembly House. Corresponds to the year and work week of the mold date.

Note:
1. Si8645 has 0 reverse channels.

16. Revision History

Revision A

July 2022

- Added Agile data sheet revision in footer.

Revision 2.16

June, 2021

- Changed Si8641Bx, Ex VDD1 Max specification from 7.8 to 7.4 in Table 4.2 Electrical Characteristics on page 12, Table 4.3 Electrical Characteristics on page 17, and Table 4.4 Electrical Characteristics on page 21
- Corrected land pattern diagram of IS2 package
- Increased IDD1 max spec from 5 mA to 6 mA for > 10 Mbps operation, based on production data.
- Uniformity: Si86xx and Si86xxx were both used to designate the product family, this edition only uses Si86xx.
- A row was added to the Truth Table 3.1 to define the condition when both VDDs are powered up but input is left not connected.
- Corrected typos in section 2.2 "Eye Diagram" – units for oscilloscope x-axis were added.
- Specified that 2 µA pull-ups/downs are integrated to enable the default high/low functions in Note 9, Truth Table 3.1.
- A separate row was added to the VIOTM spec in Table 4.8 for all Si86xxxT devices, value = 8000 V.

Revision 2.15

September 2019

- Updated Ordering Guide.

Revision 2.14

February 2019

- Updated Ordering Guide.

Revision 2.13

September 2018

- Added SI8640BB-AS, SI8641BC-AS1, and SI8642ED-AS to Ordering Guide for Automotive-Grade OPN options

Revision 2.12

February 2018

- Added SI8641BD-AS to Ordering Guide for Automotive-Grade OPN options

Revision 2.11

November 2017

- Added new table to Ordering Guide for Automotive-Grade OPN options

Revision 2.1

October 18, 2017

- Added new OPNs in Ordering Guide for IU (QSOP) and IS2 (8 mm creepage WB SOIC) package options.
- Added 62368-1 references throughout.
- Removed 61010-1 references throughout.

Revision 2.0

November 30, 2016

- Added note to Table 1.1 Ordering Guide for Valid OPNs[1, 2, 5] on page 2 for denoting tape and reel marking.

Revision 1.9

November 18, 2015

- Deleted duplicate Si8641BB-B-IU OPN listing and corrected Si8645BB-B-IU listing in 1. Ordering Guide.
- Added QSOP-16 information to Table 4.7 IEC 60664-1 Ratings on page 25.
- Added QSOP-16 information to Table 4.8 VDE 0884-10 Insulation Characteristics for Si86xx [1] on page 26.
- Added QSOP-16 information to Table 4.9 VDE 0884-10 Safety Limiting Values [1] on page 26.
- Added QSOP-16 reference to Figure 4.5 (NB SOIC-16, QSOP-16) Thermal Derating Curve, Dependence of Safety Limiting Values with Case Temperature per VDE 0884-10 on page 27.

Revision 1.8

October 29, 2015

- Added product options Si8641BB-B-IU, Si8645BB-B-IU and Si864xxT in 1. Ordering Guide.
- Added spec line items for Input and Enable Leakage Currents pertaining to Si864xxT in Electrical Specifications.
- Added new spec for t_{SD} in 4. Electrical Specifications.
- Updated IEC 60747-5-2 to IEC 60747-5-5 throughout document.

Revision 1.7

June 18, 2015

- Updated Table 5 on page 14.
  - Added CQC certificate numbers.
- Updated "4. Ordering Guide" on page 10.
  - Added Si8640BA OPN.
  - Removed references to moisture sensitivity levels.
  - Removed Note 2.

Revision 1.6

September 25, 2013

- Added Figure 3, “Common Mode Transient Immunity Test Circuit,” on page 7.
- Added references to CQC throughout.
- Added references to 2.5 kVRMS devices throughout.
- Updated "4. Ordering Guide" on page 10.
- Updated "11.1. Top Marking (16-Pin Wide Body SOIC)" on page 20.

Revision 1.5

October 3, 2012

- Updated "4. Ordering Guide" on page 10.
- Updated "11.5. Top Marking (16-Pin QSOP)" on page 22.

Revision 1.4

June 26, 2012

- Updated Table 11 on page 18.
  - Added junction temperature spec.
- Updated "2.3.1. Supply Bypass" on page 7.
- Removed “3.3.2 Pin Connections” on page 23.
- Updated "3. Pin Descriptions" on page 9.
  - Updated table notes.
- Updated "4. Ordering Guide" on page 10.
  - Removed Rev A devices.
- Updated "5. Package Outline: 16-Pin Wide Body SOIC" on page 12.
- Updated Top Marks.
  - Added revision description.

Revision 1.3

March 21, 2012

- Updated "4. Ordering Guide" on page 10 to include MSL2A.

Revision 1.2

February 15, 2012

- Updated Table 3, “Ordering Guide for Valid OPNs” on page 10.
  - Updated Note 1 with MSL2A.
  - Updated Current Revision Devices.

Revision 1.1

September 14, 2011

- Updated High Level Output Voltage VOH to 3.1 V in Table 3, “Electrical Characteristics,” on page 8.
- Updated High Level Output Voltage VOH to 2.3 V in Table 4, “Electrical Characteristics,” on page 11.

Revision 1.0

July 14, 2011

- Reordered spec tables to conform to new convention.
- Removed “pending” throughout document.

Revision 0.2

March 31, 2011

- Added chip graphics on page 1.
- Moved Tables 1 and 11 to page 18.
- Updated Table 6, “Insulation and Safety-Related Specifications,” on page 15.
- Updated Table 8, “IEC 60747-5-5 Insulation Characteristics for Si86xx,” on page 16.
- Moved Table 1 to page 4.
- Moved Table 2 to page 5.
- Moved “Typical Performance Characteristics” to page 8.
- Updated "3. Pin Descriptions" on page 9.
- Updated "4. Ordering Guide" on page 10.

Revision 0.1

September 15, 2010

- Initial release.

SKYWORKS®

Connecting Everyone and Everything, All the Time

Portfolio
skyworksinc.com

Quality
skyworksinc.com/quality

Support & Resources
skyworksinc.com/support

Copyright © 2022 Skyworks Solutions, Inc. All Rights Reserved.

Information in this document is provided in connection with Skyworks Solutions, Inc. ("Skyworks") products or services. These materials, including the information contained herein, are provided by Skyworks as a service to its customers and may be used for informational purposes only by the customer. Skyworks assumes no responsibility for errors or omissions in these materials or the information contained herein. Skyworks may change its documentation, products, services, specifications or product descriptions at any time, without notice. Skyworks makes no commitment to update the materials or information and shall have no responsibility whatsoever for conflicts, incompatibilities, or other difficulties arising from any future changes.

No license, whether express, implied, by estoppel or otherwise, is granted to any intellectual property rights by this document. Skyworks assumes no liability for any materials, products or information provided hereunder, including the sale, distribution, reproduction or use of Skyworks products, information or materials, except as may be provided in Skyworks' Terms and Conditions of Sale.

THE MATERIALS, PRODUCTS AND INFORMATION ARE PROVIDED "AS IS" WITHOUT WARRANTY OF ANY KIND, WHETHER EXPRESS, IMPLIED, STATUTORY, OR OTHERWISE, INCLUDING FITNESS FOR A PARTICULAR PURPOSE OR USE, MERCHANTABILITY, PERFORMANCE, QUALITY OR NON-INFRINGEMENT OF ANY INTELLECTUAL PROPERTY RIGHT; ALL SUCH WARRANTIES ARE HEREBY EXPRESSLY DISCLAIMED. SKYWORKS DOES NOT WARRANT THE ACCURACY OR COMPLETENESS OF THE INFORMATION, TEXT, GRAPHICS OR OTHER ITEMS CONTAINED WITHIN THESE MATERIALS. SKYWORKS SHALL NOT BE LIABLE FOR ANY DAMAGES, INCLUDING BUT NOT LIMITED TO ANY SPECIAL, INDIRECT, INCIDENTAL, STATUTORY, OR CONSEQUENTIAL DAMAGES, INCLUDING WITHOUT LIMITATION, LOST REVENUES OR LOST PROFITS THAT MAY RESULT FROM THE USE OF THE MATERIALS OR INFORMATION, WHETHER OR NOT THE RECIPIENT OF MATERIALS HAS BEEN ADVISED OF THE POSSIBILITY OF SUCH DAMAGE.

Skyworks products are not intended for use in medical, lifesaving or life-sustaining applications, or other equipment in which the failure of the Skyworks products could lead to personal injury, death, physical or environmental damage. Skyworks customers using or selling Skyworks products for use in such applications do so at their own risk and agree to fully indemnify Skyworks for any damages resulting from such improper use or sale.

Customers are responsible for their products and applications using Skyworks products, which may deviate from published specifications as a result of design defects, errors, or operation of products outside of published parameters or design specifications. Customers should include design and operating safeguards to minimize these and other risks. Skyworks assumes no liability for applications assistance, customer product design, or damage to any equipment resulting from the use of Skyworks products outside of Skyworks' published specifications or parameters.

Skyworks, the Skyworks symbol, Sky5®, SkyOne®, SkyBlue™, Skyworks Green™, ClockBuilder®, DSPLL®, ISOmodem®, ProSLIC®, and SiPHY® are trademarks or registered trademarks of Skyworks Solutions, Inc. or its subsidiaries in the United States and other countries. Third-party brands and names are for identification purposes only and are the property of their respective owners. Additional information, including relevant terms and conditions, posted at www.skyworksinc.com, are incorporated by reference.

Skyworks Solutions, Inc. | Nasdaq: SWKS | sales@skyworksinc.com | www.skyworksinc.com
USA: 781-376-3000 | Asia: 886-2-2735 0399 | Europe: 33 (0)1 43548540

Looking for pricing, stock, or lifecycle information?

Click below to explore more details on WIN SOURCE:

- View SI8645BB-B-IS on WIN SOURCE
- Skyworks Solutions Inc. Information

Optimize Your Supply Chain with WIN SOURCE Solutions

- Global Sourcing Solution
- Obsolete Management
- Cost Control Management
- Shortage Management
- Alternative Solution
- Excess Inventory Management