THE DATASHEET OF

PT8A3285PE

www.win-source.net 0086-755-83957316

PT8A3280/1/2/3/4/5/6/7

Heating Controller

Features

- Dual Voltage (120V/240V) operations
- Auto temperature control with NTC
- NTC open protection
- Multi mode LED indicator
- Proportional control
- Pulse trigger for high current SCR/TRIAC (up to 15mA)
- Internal Zener
- Auto Heating off after heating timer timeout
- Low cost 8-Pin DIP and SOIC package

Applications

- Curler
- Straightener

Description

The PT8A3280/1/2/3/4/5/6/7 is a mixed signal CMOS LSI chip designed as heating controller with help of external NTC (Negative Temperature Component). NTC open protection is implemented for device safety. This device can be used in both 120V and 240V power line supplier, as it will automatically adjust the heating power according to the power line voltage to avoid heating appliance damage or long heating time. The proportional control algorithm is designed in this product.

Pin Configuration

PT8A3280/1/2/3
PT8A3284/5/6/7

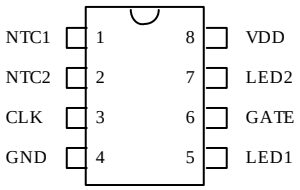

Pin Description

Pin No.	Pin Name	I/O	Description
1	NTC1	I	NTC voltage input, NTC open detection input
2	NTC2	O	Output signal for NTC open detection
3	CLK	I	Clock input from power line
4	GND	Power	Ground and Power
5	LED1	I/O	**3280/1/2/3/4/5/6/7:** LED1 driving output
6	GATE	O	**3280/1/2/3:** SCR trigger output **3284/5/6/7:** TRIAC trigger output
7	LED2	I/O	**3280/1/2/3/4/5/6/7:** LED2 driving output
8	VDD	Power	Ground and Power

Block Diagram

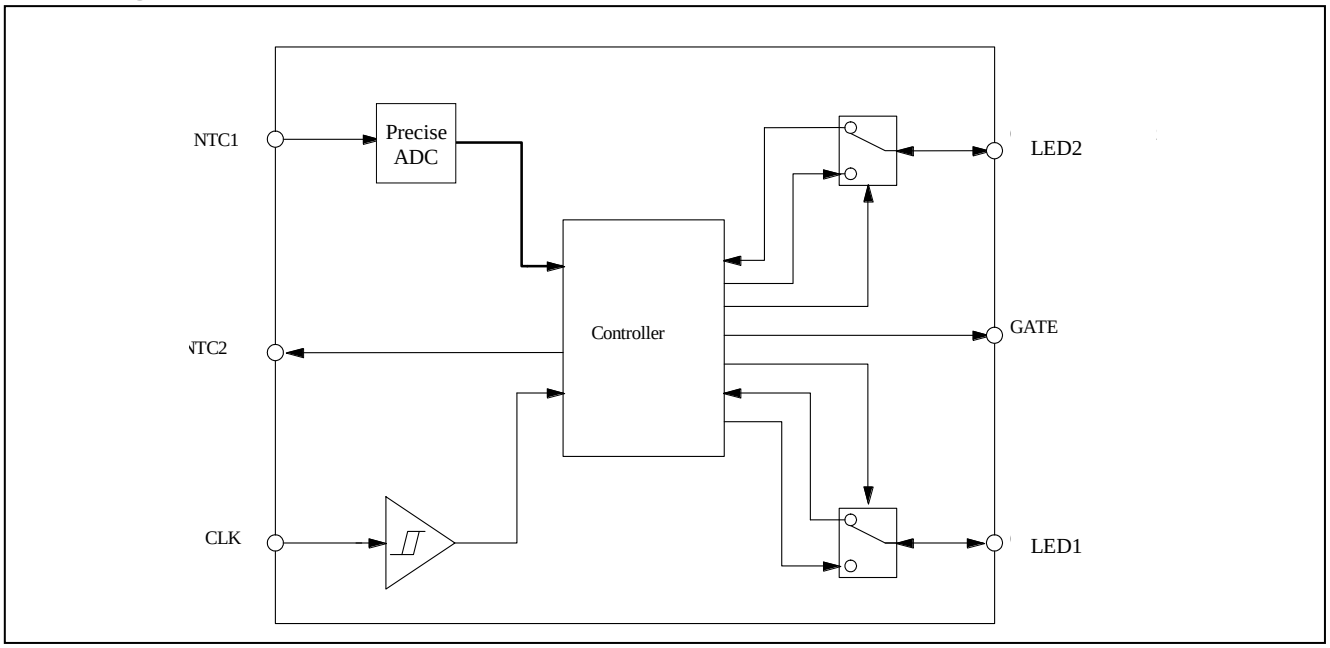

Maximum Ratings

Storage Temperature	-65°C to +150°C
Supply Voltage to Ground Potential (Input & V_{CC} Only)	-0.5V to + 5.5V
Supply Voltage to Ground Potential (Outputs)	-0.5V to + 5.5V
DC Input Voltage	-0.5V to + 5.5V
DC Output Current	20mA
Power Dissipation	500mW

Note:
Stresses greater than those listed under MAXIMUM RATINGS may cause permanent damage to the device. This is a stress rating only and functional operation of the device at these or any other conditions above those indicated in the operational sections of this specification is not implied. Exposure to absolute maximum rating conditions for extended periods may affect reliability.

Recommended operation conditions

Symbol	Pin	Parameter	Min	Typ	Max	Unit
Frequency	CLK	Input CLK Frequency	-	50/60	-	Hz
T_A	-	Operating temperature	-20	-	85	℃

AC Electrical Characteristics

(V_{DD} = 3.5 ~ 5.5V, T_A = -20 ~ 85 ℃, unless otherwise noted)

Symbol	Description	Test Conditions	Min	Type	Max	Unit
F_{CLK}	Frequency of CLK	-		50/60		Hz
T_{GATE}	Width of trigger pulse	-	160	200	240	μS
Timer	Power off timer	F_{CLK}= 50Hz	1.15	1.2	1.25	Hour

DC Electrical Characteristics

(V_{DD} = 3.5 ~ 5.5V, T_A = -20 ~ 85℃, unless otherwise noted)

Symbol	Description	Test Conditions		Min	Type	Max	Unit
I_{IH}	Input high current	PIN: CLK	$V_{IN} = V_{DD}$	-	-	1	μA
		PIN: NTC1	$V_{IN} = V_{DD}$	-	-	100	nA
		PIN: NTC2	$V_{IN} = V_{DD}$,Output High impedance	-	-	100	nA
I_{IL}	Input low current	PIN: CLK	V_{IN} = GND	-	-	-1	μA
			V_{IN} = 0.35V	-	-	-10	μA
		PIN: NTC1	V_{IN} = GND	-	-	-100	nA
		PIN: NTC2	V_{IN} = GND, Output High impedance	-	-	-100	nA
I_{OH}	Output High current	PIN: GATE	V_{DD} =4.5V Vout = 2.5V	-15	-	-	mA
I_{OL}	Output Low current	PIN: NTC2	V_{DD} =4.5V Vout =0.5V	2.0	-	-	mA
		PIN: GATE	V_{DD} =4.5V Vout =0.5V	5.0	-	-	mA
V_{POR}	Voltage of POR	-		1.5	-	2.5	V
V_Z	Voltage of Zener	I_{DD}= 500uA ~ 10mA		4.5	5.0	5.5	V
I_{DD}	Current consumption	NTC1,CLK pin tied to ground V_{DD} = 4.5V		-	-	500	μA

Functional Description

- **State description**
  - **Reset**

The device will be of reset state after power-on.

  - **Heating on**

The device will be heating on after power on.

  - **Heating off**

This device enter heating-off state after its power-on reset or heating timer timeout, and all pins will be the same status as after power-on reset.

- **NTC open protection**

When NTC is open, NTC1 pin will be pulled low in the period of NTC open detected.

- **Timer**

Once IC enters Heating-on State, internal timer starts to count. When time is out after 216000 clock period, it will exit heating-on state. That is, in case of 60Hz CLK signal, the heating time is about 1 hour; and 1.2 hour for 50Hz.

In heating-on state, temperature is regulated to the selected temperature by the IC through NTC close control loop.

- **Control signal output**

When working in Heating-on state, Gate/LED output will be related to NTC1 input and CLK input amplitude.

Effect of NTC and VT_{CLK} (Level 2) on GATE and LED indication

Working State	CLK input voltage	NTC (NTC open detection)	NTC (Normal temp detection)	GATE (trigger to SCR/TRIAC)	LED			
					LED1	LED2	LED1	LED2
					3280/2/4/6	3280/2/4/6	3281/3/5/7	3281/3/5/7
ON	High for level 2 (240V)	V_{NTCO}~ V_{DD}	0 ~ V_{ADC_BIT15}	Proportional output	Flash1*	Invert of LED1	On	Off
			V_{ADC_BIT14} ~ V_{ADC_BIT1}		On		On	On
			V_{ADC_BIT1} ~ V_{DD}	0	On		On	On
	Low for level 2 (120V)		0 ~ V_{ADC_BIT15}	Proportional output	Flash1		On	Off
			V_{ADC_BIT14} ~ V_{ADC_BIT1}		On		On	On
			V_{ADC_BIT1} ~ V_{DD}	0	On		On	On
Off	X*		X	0	Off		Off	Off
X	X	0~V_{NTCO}	X	0	Flash2*		Flash2*	Off

***Note**: 1) X means any input. 2) Flash1 frequency is 1/32 clock. 3) Flash2 frequency is 1/8 clock

Application Circuit

PT8A3280/1/2/3 Application circuit

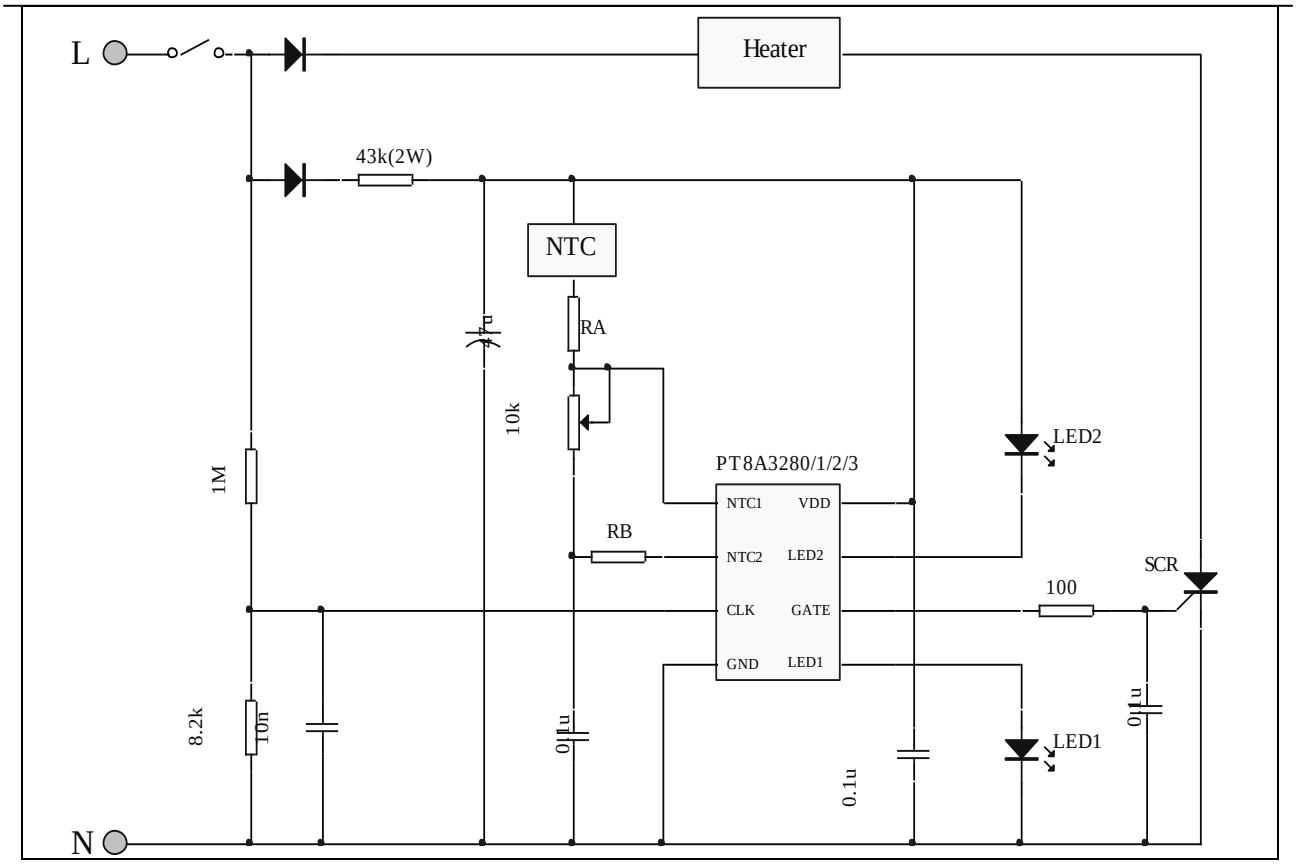

PT8A3284/5/6/7 Application circuit

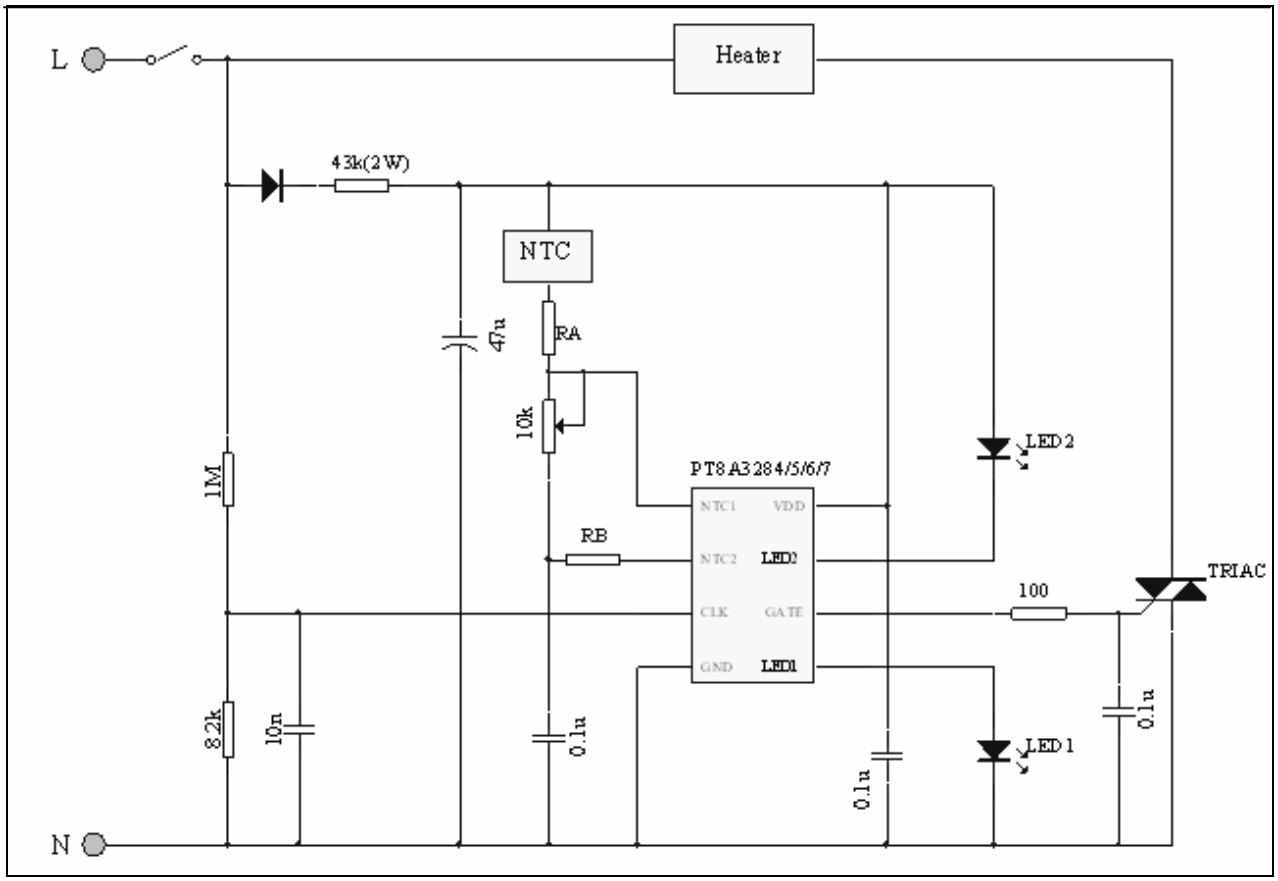

Mechanical Information

PE (DIP-8)

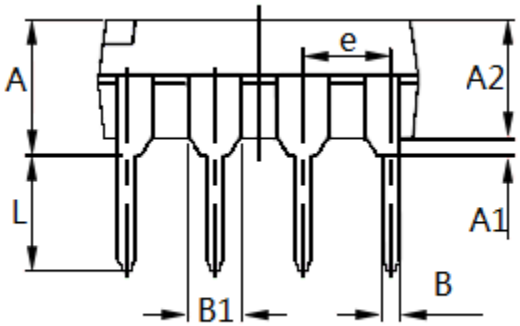

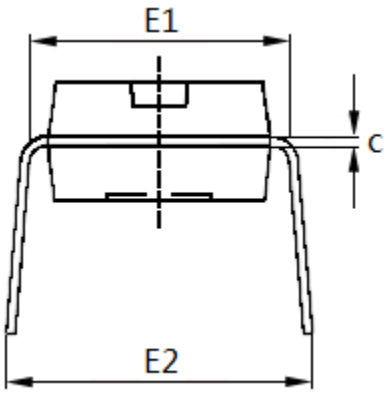

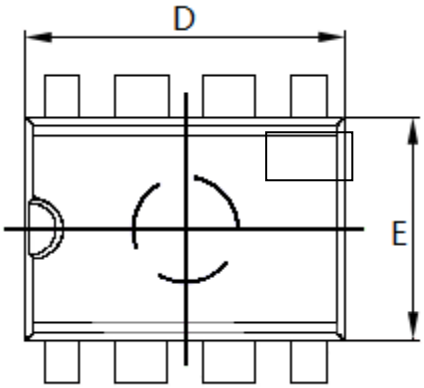

Symbol	Dimensions In Millimeters	
	Min	Max
A	3.710	4.310
A1	0.510	
A2	3.200	3.600
B	0.380	0.570
B1	1.524 BSC	
c	0.204	0.360
D	9.000	9.400
E	6.200	6.600
E1	7.320	7.920
e	2.540 BSC	
L	3.000	3.600
E2	8.400	9.000

Note:
1) Controlling dimensions in millimeters.
2) Ref: JEDEC MS-001D/BA

WE (SOIC-8)

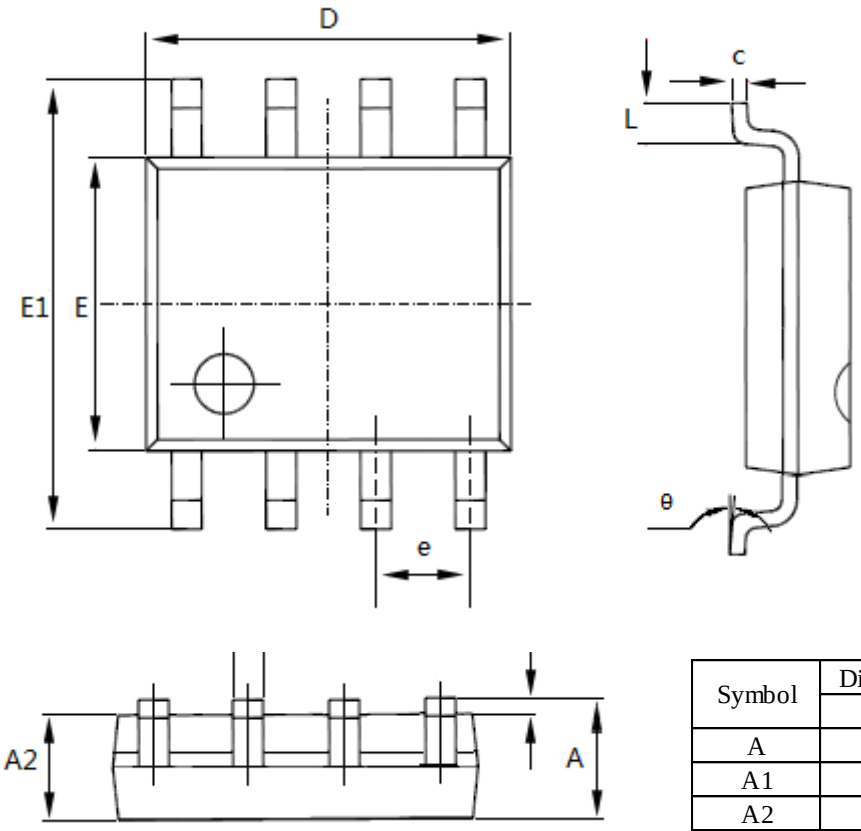

Note:
1) Controlling dimensions in millimeters.
2) Ref: JEDEC MS-012E/AA

Symbol	Dimensions In Millimeters	
	Min	Max
A	1.350	1.750
A1	0.100	0.250
A2	1.350	1.550
b	0.330	0.510
c	0.170	0.250
D	4.700	5.100
E	3.800	4.000
E1	5.800	6.200
e	1.27 BSC	
L	0.400	1.270
θ	0°	8°

Ordering Information

Part No.	Package Code	Package
PT8A328xPE	P	Lead free 8-Pin DIP
PT8A328xWE	W	Lead free and Green 8-Pin SOIC

Note:

- "x" shows 0~7 with different function see *Function Comparison Table*.
- E = Pb-free or Pb-free & Green
- Adding X Suffix= Tape/Reel

Function Comparison Table

Part number	LED	Timer	Driver
PT8A3280	Flash	Y	SCR
PT8A3281	Constant	Y	SCR
PT8A3282	Flash	N	SCR
PT8A3283	Constant	N	SCR
PT8A3284	Flash	Y	TRIAC
PT8A3285	Constant	Y	TRIAC
PT8A3286	Flash	N	TRIAC
PT8A3287	Constant	N	TRIAC

Pericom reserves the right to make changes to its products or specifications at any time, without notice, in order to improve design or performance and to supply the best possible product. Pericom does not assume any responsibility for use of any circuitry described other than the circuitry embodied in Pericom product. The company makes no representations that circuitry described herein is free from patent infringement or other rights, of Pericom.

Looking for pricing, stock, or lifecycle information?

Click below to explore more details on WIN SOURCE:

- View PT8A3285PE on WIN SOURCE
- Diodes Incorporated Information

Optimize Your Supply Chain with WIN SOURCE Solutions

- Global Sourcing Solution
- Obsolete Management
- Cost Control Management
- Shortage Management
- Alternative Solution
- Excess Inventory Management