THE DATASHEET OF

THS6002CDWP

www.win-source.net 0086-755-83957316

SLOS202E− JANUARY 1998− REVISED MARCH 2007

- **ADSL Differential Line Driver and Receiver**
- **Driver Features**
  - **140 MHz Bandwidth (−3dB) With 25-Ω Load**
  - **315 MHz Bandwidth (−3dB) With 100-Ω Load**
  - **1000 V/µs Slew Rate, G = 2**
  - **400 mA Output Current Minimum Into 25-Ω Load**
  - **−72 dB 3rd Order Harmonic Distortion at f = 1 MHz, 25-Ω Load, and 20 $V_{O(PP)}$**
- **Receiver Features**
  - **330 MHz Bandwidth (−3dB)**
  - **900 V/µs Slew Rate at G = 2**
  - **−76 dB 3rd Order Harmonic Distortion at f = 1 MHz, 150-Ω Load, and 20 $V_{O(PP)}$**
- **Wide Supply Range ±4.5 V to ±16 V**
- **Available in the PowerPAD™ Package**
- **Improved Replacement for AD816 or EL1501**
- **Evaluation Module Available**

DWP PACKAGE
(TOP VIEW)

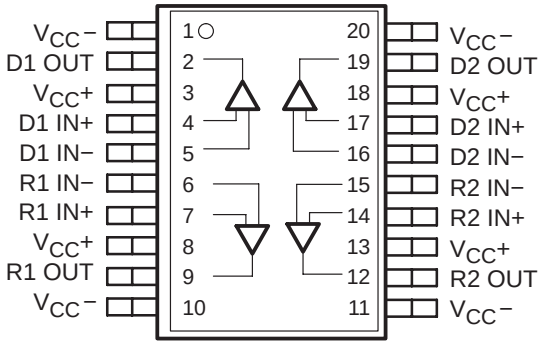

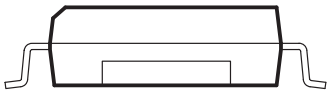

Cross Section View Showing PowerPAD

description

The THS6002 contains two high-current, high-speed drivers and two high-speed receivers. These drivers and receivers can be configured differentially for driving and receiving signals over low-impedance lines. The THS6002 is ideally suited for asymmetrical digital subscriber line (ADSL) applications where it supports the high-peak voltage and current requirements of that application. Both the drivers and the receivers are current feedback amplifiers designed for the high slew rates necessary to support low total harmonic distortion (THD) in ADSL applications. Separate power supply connections for each driver are provided to minimize crosstalk.

HIGH-SPEED xDSL LINE DRIVER/RECEIVER FAMILY

DEVICE	DRIVER	RECEIVER	5 V	±5 V	±15 V	BW (MHz)	SR (V/µs)	THD f = 1 MHz (dB)	I_O (mA)	V_n (nV/√Hz)
THS6002	•	•		•	•	140	1000	−62	500	1.7
THS6012	•			•	•	140	1300	−65	500	1.7
THS6022	•			•	•	210	1900	−66	250	1.7
THS6062		•	•	•	•	100	100	−72	90	1.6
THS7002		•		•	•	70	100	−84	25	2.0

CAUTION: The THS6002 provides ESD protection circuitry. However, permanent damage can still occur if this device is subjected to high-energy electrostatic discharges. Proper ESD precautions are recommended to avoid any performance degradation or loss of functionality.

Please be aware that an important notice concerning availability, standard warranty, and use in critical applications of Texas Instruments semiconductor products and disclaimers thereto appears at the end of this data sheet.

PowerPAD is a trademark of Texas Instruments Incorporated.

PRODUCTION DATA information is current as of publication date. Products conform to specifications per the terms of Texas Instruments standard warranty. Production processing does not necessarily include testing of all parameters.

Copyright © 1999, Texas Instruments Incorporated

description (continued)

The THS6002 is packaged in the patented PowerPAD package. This package provides outstanding thermal characteristics in a small footprint package, which is fully compatible with automated surface mount assembly procedures. The exposed thermal pad on the underside of the package is in direct contact with the die. By simply soldering the pad to the PWB copper and using other thermal outlets, the heat is conducted away from the junction.

AVAILABLE OPTIONS

T_A	PACKAGED DEVICE	
	PowerPAD PLASTIC SMALL OUTLINE† (DWP)	EVALUATION MODULE
0°C to 70°C	THS6002CDWP	THS6002EVM
−40°C to 85°C	THS6002IDWP	

† The DWP packages are available taped and reeled. Add an R suffix to the device type (i.e., THS6002CDWPR)

absolute maximum ratings over operating free-air temperature (unless otherwise noted)†

Supply voltage, V_{CC+} to V_{CC-} . . . . . 33 V
Input voltage, V_I (driver and receiver) . . . . . $\pm V_{CC}$
Output current, I_O (driver) (see Note 1) . . . . . 800 mA
Output current, I_O (receiver) (see Note 1) . . . . . 150 mA
Differential input voltage, V_{ID} (driver and receiver) . . . . . 6 V
Continuous total power dissipation at (or below) T_A = 25°C (see Note 1) . . . . . 5.8 W
Operating free air temperature, T_A . . . . . −40°C to 85°C
Storage temperature, T_{stg} . . . . . −65°C to 125°C
Lead temperature, 1,6 mm (1/16 inch) from case for 10 seconds . . . . . 300°C

† Stresses beyond those listed under “absolute maximum ratings” may cause permanent damage to the device. These are stress ratings only, and functional operation of the device at these or any other conditions beyond those indicated under “recommended operating conditions” is not implied. Exposure to absolute-maximum-rated conditions for extended periods may affect device reliability.

NOTE 1: The THS6002 incorporates a PowerPad on the underside of the chip. This acts as a heatsink and must be connected to a thermal dissipation plane for proper power dissipation. Failure to do so can result in exceeding the maximum junction temperature, which could permanently damage the device. See the *Thermal Information* section of this document for more information about PowerPad technology.

recommended operating conditions

		MIN	TYP	MAX	UNIT
Supply voltage, V_{CC+} and V_{CC-}	Split supply	±4.5		±16	V
	Single supply	9		32	
Operating free-air temperature, T_A	C suffix	0		70	°C
	I suffix	−40		85	

functional block diagram

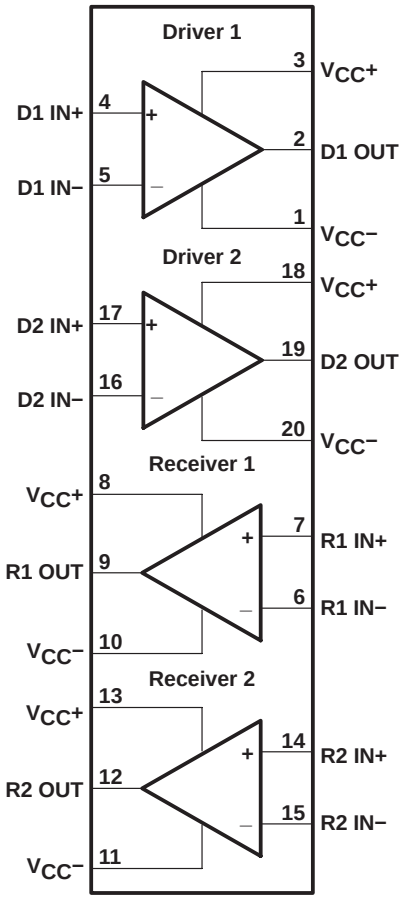

DRIVER

electrical characteristics, V_{CC} = ±15 V, R_L = 25 Ω, R_F = 1 kΩ, T_A = 25°C (unless otherwise noted)

PARAMETER			TEST CONDITIONS†		MIN	TYP	MAX	UNIT
V_{CC}	Power supply operating range		Split supply		±4.5		±16.5	V
			Single supply		9		33	
V_O	Output voltage swing	Single ended	R_L = 25 Ω	V_{CC} = ±5 V	3 to −2.8	3.2 to −3		V
				V_{CC} = ±15 V	11.8 to −11.5	12.5 to −12.2		
		Differential	R_L = 50 Ω	V_{CC} = ±5 V	6 to −5.6	6.4 to −6		V
				V_{CC} = ±15 V	23.6 to −23	25 to −24.4		
V_{ICR}	Common-mode input voltage range		V_{CC} = ±5 V		±3.6	±3.7		V
			V_{CC} = ±15 V		±13.4	±13.5		
V_{IO}	Input offset voltage		V_{CC} = ±5 V or ±15 V	T_A = 25°C		2	5	mV
				T_A = full range			7	
	Input offset voltage drift		V_{CC} = ±5 V or ±15 V,	T_A = full range			20	µV/°C
	Differential input offset voltage		V_{CC} = ±5 V or ±15 V	T_A = 25°C		1.5	4	mV
				T_A = full range			5	
	Differential input offset voltage drift		V_{CC} = ±5 V or ±15 V,	T_A = full range			10	µV/°C
I_{IB}	Input bias current	Negative	V_{CC} = ±5 V or ±15 V	T_A = 25°C		3	9	µA
				T_A = full range			12	
		Positive		T_A = 25°C		4	10	µA
				T_A = full range			12	
		Differential		T_A = 25°C		1.5	8	µA
				T_A = full range			11	
I_O	Output current (see Note 2)		V_{CC} = ±5 V,	R_L = 5 Ω		500		mA
			V_{CC} = ±15 V,	R_L = 25 Ω	400	500		
I_{OS}	Short-circuit output current (see Note 2)					800		mA
	Open loop transresistance		V_{CC} = ±5 V			1.5		MΩ
			V_{CC} = ±15 V			5		
CMRR	Common-mode rejection ratio		V_{CC} = ±5 V or ±15 V,	T_A = full range	62	70		dB
	Differential common-mode rejection ratio					100		
	Crosstalk	Driver to driver	V_I = 200 mV,	f = 1 MHz		−62		dB

† Full range is 0°C to 70°C for the THS6002C and −40°C to 85°C for the THS6002I.

NOTE 2: A heat sink is required to keep the junction temperature below absolute maximum when an output is heavily loaded or shorted. See absolute maximum ratings and Thermal Information section.

DRIVER

electrical characteristics, V_{CC} = ±15 V, R_L = 25 Ω, R_F = 1 kΩ, T_A = 25°C (unless otherwise noted) (continued)

PARAMETER		TEST CONDITIONS†		MIN	TYP	MAX	UNIT
PSRR	Power supply rejection ratio	V_{CC} = ±5 V	T_A = 25°C	−68	−74		dB
			T_A = full range	−65			
		V_{CC} = ±15 V	T_A = 25°C	−64	−72		dB
			T_A = full range	−62			
C_I	Differential input capacitance				1.4		pF
R_I	Input resistance				300		kΩ
R_O	Output resistance	Open loop			13		Ω
I_{CC}	Quiescent current	V_{CC} = ±5 V	T_A = 25°C		8.5	10	mA
			T_A = full range			12	
		V_{CC} = ±15 V	T_A = 25°C		11.5	13	
			T_A = full range			15	

† Full range is 0°C to 70°C for the THS6002C and −40°C to 85°C for the THS6002I.

operating characteristics, V_{CC} = ±15 V, R_L = 25 Ω, R_F = 1 kΩ, T_A = 25°C (unless otherwise noted)

PARAMETER			TEST CONDITIONS		MIN	TYP	MAX	UNIT
SR	Differential slew rate		V_O = 20 $V_{(PP)}$, G = 2			1000		V/µs
t_s	Settling time to 0.1%		0 V to 10 V Step, G = 2			70		ns
THD	Total harmonic distortion		$V_{O(PP)}$ = 20 V, R_F = 4 kΩ, G = 5, f = 1 MHz			−62		dBc
V_n	Input voltage noise		V_{CC} = ±5 V or ±15 V, G = 2, f = 10 kHz, Single-ended			1.7		nV/√Hz
I_n	Input noise current	Positive (IN+)	V_{CC} = ±5 V or ±15 V, G = 2, f = 10 kHz,			11.5		pA/√Hz
		Negative (IN−)				16		
BW	Small-signal bandwidth (−3 dB)		V_I = 200 mV, G = 1, R_F = 680 Ω	V_{CC} = ±5 V	90	110		MHz
				V_{CC} = ±15 V	110	140		MHz
			V_I = 200 mV, G = 2, R_F = 620 Ω	V_{CC} = ±15 V		120		MHz
			V_I = 200 mV, G = 1, R_F = 820 Ω, R_L = 100 Ω	V_{CC} = ±15 V		315		MHz
			V_I = 200 mV, G = 2, R_F = 560 Ω, R_L = 100 Ω	V_{CC} = ±15 V		265		MHz
	Bandwidth for 0.1 dB flatness		V_I = 200 mV, G = 1, R_F = 680 Ω	V_{CC} = ±5 V		30		MHz
				V_{CC} = ±15 V		40		
	Full power bandwidth (see Note 3)		V_O = 20 $V_{(PP)}$			16		MHz
A_D	Differential gain error		G = 2, R_L = 150 Ω, NTSC, 40 IRE	V_{CC} = ±5 V		0.04%		
				V_{CC} = ±15 V		0.05%		
ϕ_D	Differential phase error		G = 2, R_L = 150 Ω, NTSC, 40 IRE	V_{CC} = ±5 V		0.07°		
				V_{CC} = ±15 V		0.08°		

NOTE 3: Full power bandwidth = slew rate/$2\pi V_{peak}$

RECEIVER

electrical characteristics, V_{CC} = ±15 V, R_L = 150 Ω, R_F = 1 kΩ, T_A = 25°C (unless otherwise noted)

PARAMETER			TEST CONDITIONS†		MIN	TYP	MAX	UNIT
V_{CC}	Power supply operating range		Split supply		±4.5		±16.5	V
			Single supply		9		33	
V_O	Output voltage swing	Single ended	V_{CC} = ±5 V		±3	±3.3		V
			V_{CC} = ±15 V		±12.4	±12.8		
V_{ICR}	Common-mode input voltage range		V_{CC} = ±5 V		±3.6	±3.7		V
			V_{CC} = ±15 V		±13.4	±13.5		
V_{IO}	Input offset voltage	Single ended	V_{CC} = ±5 V or ±15 V	T_A = 25°C		1	4	mV
				T_A = full range			6	
		Differential		T_A = 25°C		1.5	4	
				T_A = full range			5	
	Input offset voltage drift	Single ended	V_{CC} = ±5 V or ±15 V				20	μV/°C
		Differential					10	
I_{IB}	Input bias current	Negative	V_{CC} = ±5 V or ±15 ,	T_A = 25°C		2	8	μA
				T_A = full range			10	
		Positive	V_{CC} = ±5 V or ±15 V	T_A = 25°C		3.5	9	
				T_A = full range			11	
		Differential	V_{CC} = ±5 V or ±15 V	T_A = 25°C		1.5	8	
				T_A = full range			10	
I_O	Output current (see Note 2)		V_{CC} = ±5 V	R_L = 25 Ω		95		mA
			V_{CC} = ±15 V	R_L = 150 Ω	80	85		
I_{OS}	Short-circuit output current (see Note 2)		R_L = 25 Ω			110		mA
	Open loop transresistance		V_{CC} = ±5 V			1.5		MΩ
			V_{CC} = ±15 V			5		
CMRR	Common-mode rejection ratio	Single ended	V_{CC} = ±5 V or ±15 V,	T_A = full range	60	70		dB
		Differential				100		
	Crosstalk (receiver to receiver)		V_I = 200 mV,	f = 1 MHz		−67		dB
PSRR	Power supply rejection ratio		V_{CC} = ±5 V	T_A = 25°C	−66	−74		dB
				T_A = full range	−63			
			V_{CC} = ±15 V	T_A = 25°C	−65	−72		
				T_A = full range	−62			
R_I	Input resistance					300		kΩ
C_I	Differential input capacitance					1.4		pF
R_O	Output resistance		Open loop			10		Ω

† Full range is 0°C to 70°C for the THS6002C and −40°C to 85°C for the THS6002I.

NOTE 2: A heat sink is required to keep junction temperature below absolute maximum when an output is heavily loaded or shorted. See absolute maximum ratings and Thermal Information section.

RECEIVER

electrical characteristics, V_{CC} = ±15 V, R_L = 150 Ω, R_F = 1 kΩ, T_A = 25°C (unless otherwise noted) (continued)

PARAMETER		TEST CONDITIONS†		MIN	TYP	MAX	UNIT
I_{CC}	Quiescent current	V_{CC} = ±5 V	T_A = 25°C		4.2	5.5	mA
			T_A = full range			7.5	
		V_{CC} = ±15 V	T_A = 25°C		5	7	
			T_A = full range			9	

† Full range is 0°C to 70°C for the THS6002C and −40°C to 85°C for the THS6002I.

operating characteristics, V_{CC} = ±15 V, R_L = 150 Ω, R_F = 1 kΩ, T_A = 25°C (unless otherwise noted)

PARAMETER			TEST CONDITIONS		MIN	TYP	MAX	UNIT
SR	Differential slew rate		V_O = 10 $V_{(PP)}$, G = 2			900		V/µs
t_s	Settling time to 0.1%		10 V Step, G = 2			50		ns
THD	Total harmonic distortion		$V_{O(PP)}$ = 20 V, G = 5, R_F = 510 Ω, f =1 MHz			−68		dBc
V_n	Input voltage noise		V_{CC} = ±5 V or ±15 V G = 2, f = 10 kHz,			1.7		nV/√Hz
I_n	Input current noise	Positive (IN+)	V_{CC} = ±5 V or ±15 V, G = 2, f = 10 kHz,			11.5		pA/√Hz
		Negative (IN−)				16		
BW	Small-signal bandwidth (−3 dB)		V_I = 200 mV, R_F = 560 Ω, G = 1,	V_{CC} = ±5 V	270	300		MHz
				V_{CC} = ±15 V	300	330		
			V_I = 200 mV, R_F = 430 Ω, G = 2,	V_{CC} = ±15 V		285		MHz
	Bandwidth for 0.1 dB flatness		V_I = 200 mV, R_F = 560 Ω, G = 1,	V_{CC} = ±5 V		20		MHz
				V_{CC} = ±15 V		25		
	Full power bandwidth (see Note 3)		V_O = 20 $V_{(PP)}$			14		MHz
A_D	Differential gain error		40 IRE, R_L = 150 Ω, G = 2, NTSC	V_{CC} = ±5 V		0.09%		
				V_{CC} = ±15 V		0.1%		
ϕ_D	Differential phase error		40 IRE, R_L = 150 Ω, G = 2, NTSC	V_{CC} = ±5 V		0.13°		
				V_{CC} = ±15 V		0.16°		

NOTE 3: Full power bandwidth = slew rate/$2\pi V_{peak}$

PARAMETER MEASUREMENT INFORMATION

Figure 1. Driver Input-to-Output Crosstalk Test Circuit

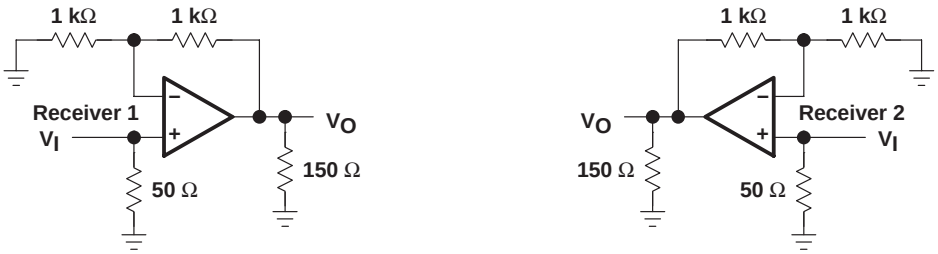

Figure 2. Receiver Input-to-Output Crosstalk Test Circuit

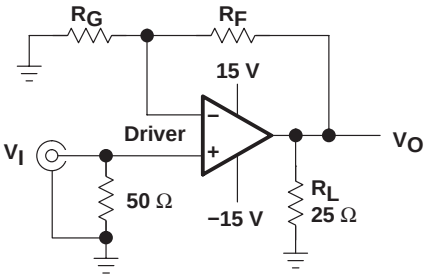

Figure 3. Driver Test Circuit, Gain = 1 + (R_F/R_G)

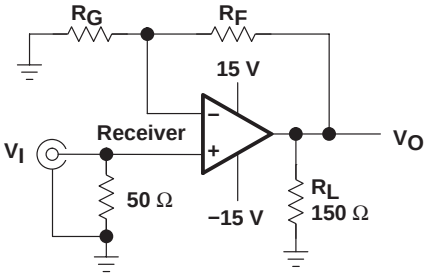

Figure 4. Receiver Test Circuit, Gain = 1 + (R_F/R_G)

TYPICAL CHARACTERISTICS

Table of Graphs

				FIGURE
	Supply current	Driver and Receiver	vs Supply voltage	5
	Input voltage noise	Driver and Receiver	vs Frequency	6
	Input current noise	Driver and Receiver	vs Frequency	6
	Closed-loop output impedance	Driver and Receiver	vs Frequency	7
	Peak-to-peak output voltage swing	Driver	vs Supply voltage	8
		Receiver	vs Supply voltage	31
	Peak-to-peak output voltage	Driver	vs Load resistance	9
		Receiver	vs Load resistance	32
V_{IO}	Input offset voltage	Driver	vs Free-air temperature	10
		Receiver	vs Free-air temperature	33
I_{IB}	Input bias current	Driver	vs Free-air temperature	11
		Receiver	vs Free-air temperature	34
CMMR	Common-mode rejection ratio	Driver	vs Free-air temperature	12
		Receiver	vs Free-air temperature	35
	Input-to-output crosstalk	Driver	vs Frequency	13
		Receiver	vs Frequency	36
	Driver-to-receiver crosstalk		vs Frequency	14
	Receiver-to-driver crosstalk		vs Frequency	37
PSSR	Power supply rejection ratio	Driver	vs Free-air temperature	15
		Receiver	vs Free-air temperature	38
I_{CC}	Supply current	Driver	vs Free-air temperature	16
		Receiver	vs Free-air temperature	39
	Normalized frequency response	Driver	vs Frequency	17, 18
		Receiver	vs Frequency	40, 41
	Normalized output response	Driver	vs Frequency	19 − 22
	Single-ended output distortion	Driver	vs Output voltage	23
	Output distortion	Receiver	vs Output voltage	42
	Small and large signal frequency response	Receiver		43, 44
	Differential gain	Driver	DC input offset voltage	24, 25
			Number of 150-Ω loads	26, 27
		Receiver	DC input offset voltage	45, 46
			Number of 150-Ω loads	47, 48
	Differential phase	Driver	DC input offset voltage	24, 25
			Number of 150-Ω loads	26, 27
		Receiver	DC input offset voltage	45, 46
			Number of 150-Ω loads	47, 48
	Output step response	Driver		28 − 30
		Receiver		49 − 51

TYPICAL CHARACTERISTICS

DRIVER AND RECEIVER
SUPPLY CURRENT
vs
SUPPLY VOLTAGE

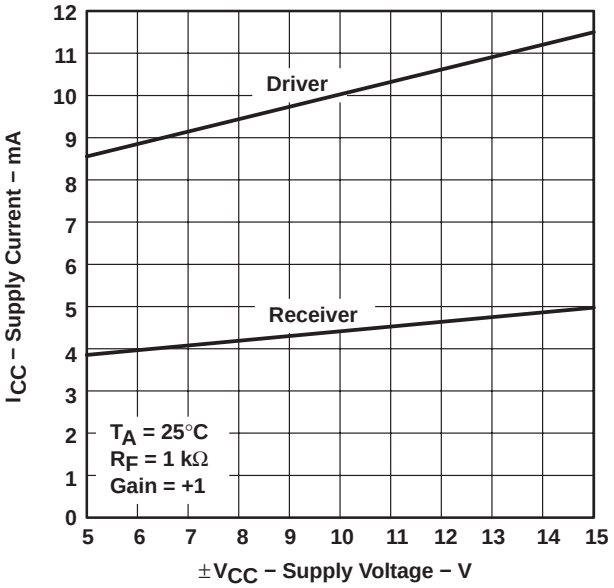

Figure 5

DRIVER AND RECEIVER
INPUT VOLTAGE AND CURRENT NOISE
vs
FREQUENCY

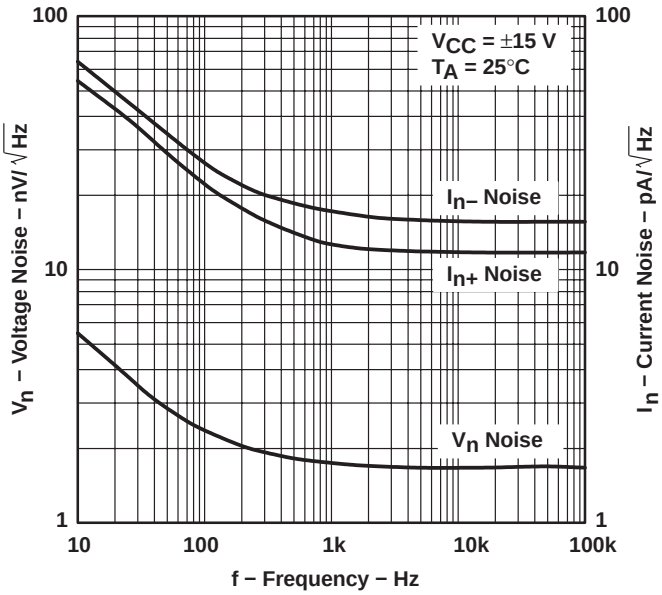

Figure 6

DRIVER AND RECEIVER
CLOSED-LOOP OUTPUT IMPEDANCE
vs
FREQUENCY

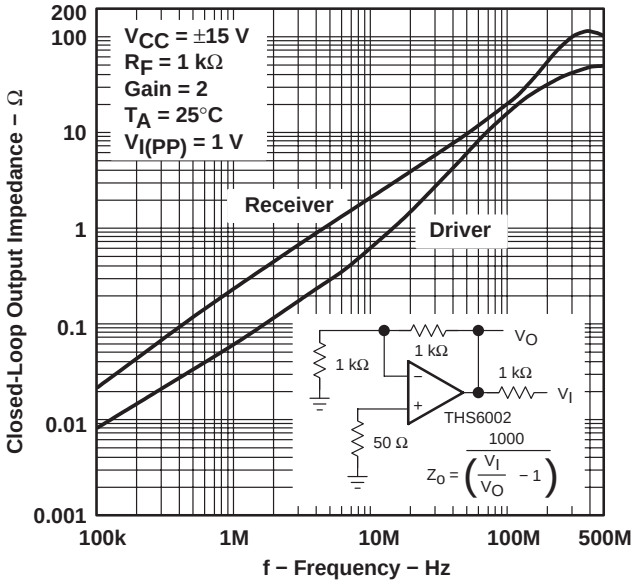

Figure 7

TYPICAL CHARACTERISTICS

DRIVER
PEAK-TO-PEAK OUTPUT VOLTAGE SWING
vs
SUPPLY VOLTAGE

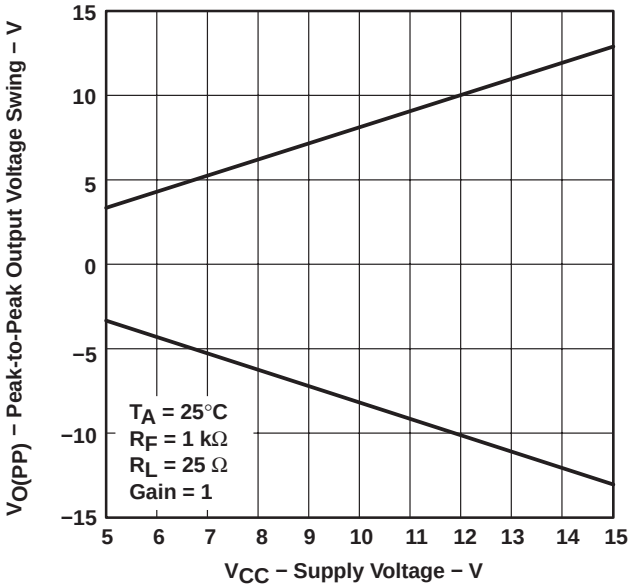

Figure 8

DRIVER
PEAK-TO-PEAK OUTPUT VOLTAGE
vs
LOAD RESISTANCE

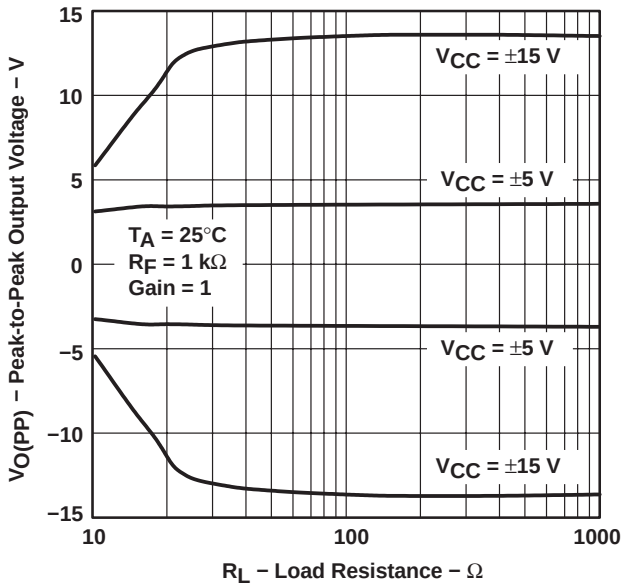

Figure 9

DRIVER
INPUT OFFSET VOLTAGE
vs
FREE-AIR TEMPERATURE

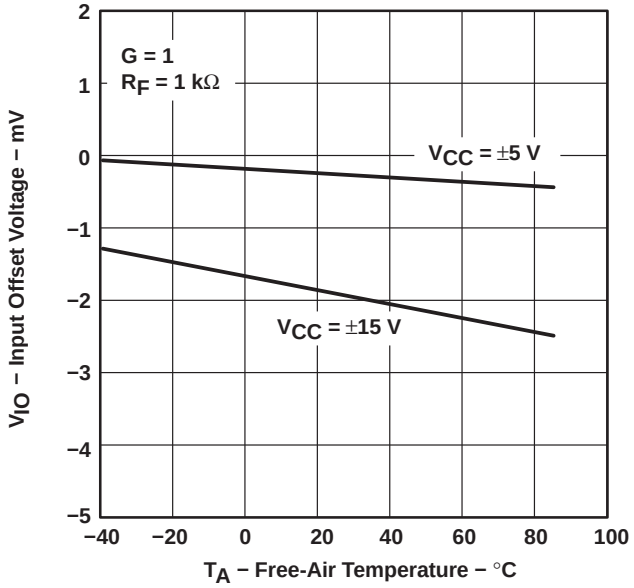

Figure 10

DRIVER
INPUT BIAS CURRENT
vs
FREE-AIR TEMPERATURE

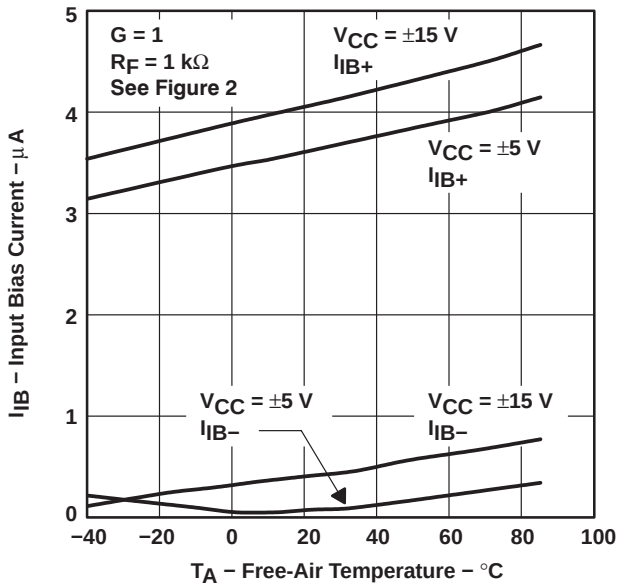

Figure 11

TYPICAL CHARACTERISTICS

DRIVER
COMMON-MODE REJECTION RATIO
vs
FREE-AIR TEMPERATURE

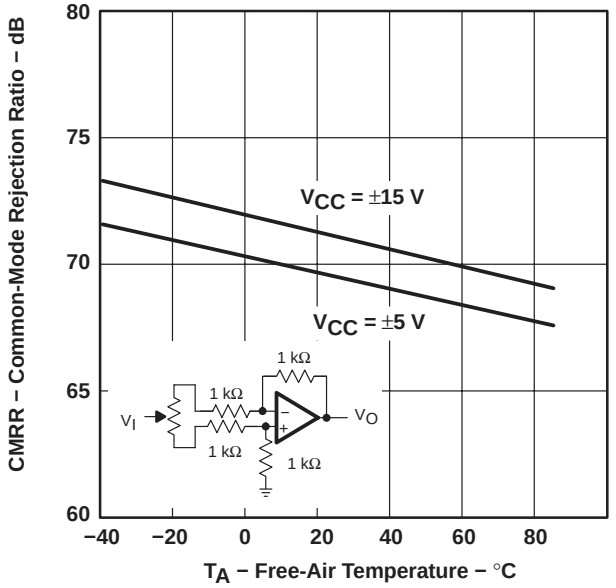

Figure 12

DRIVER
INPUT-TO-OUTPUT CROSSTALK
vs
FREQUENCY

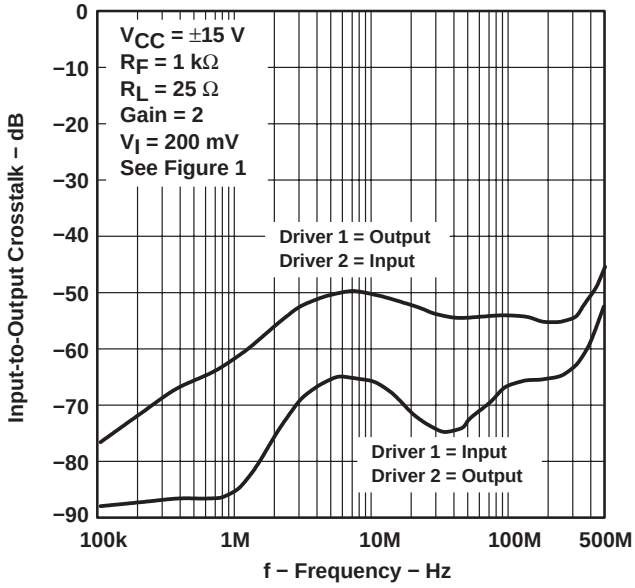

Figure 13

DRIVER-TO-RECEIVER CROSSTALK
vs
FREQUENCY

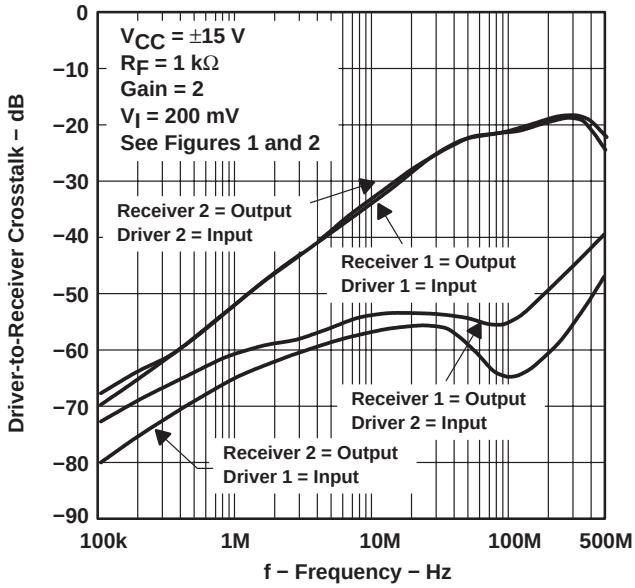

Figure 14

DRIVER
POWER SUPPLY REJECTION RATIO
vs
FREE-AIR TEMPERATURE

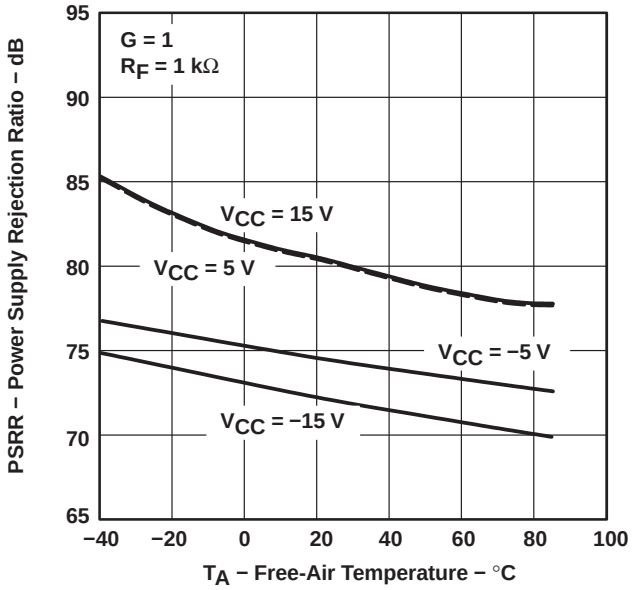

Figure 15

TYPICAL CHARACTERISTICS

DRIVER
SUPPLY CURRENT
vs
FREE-AIR TEMPERATURE

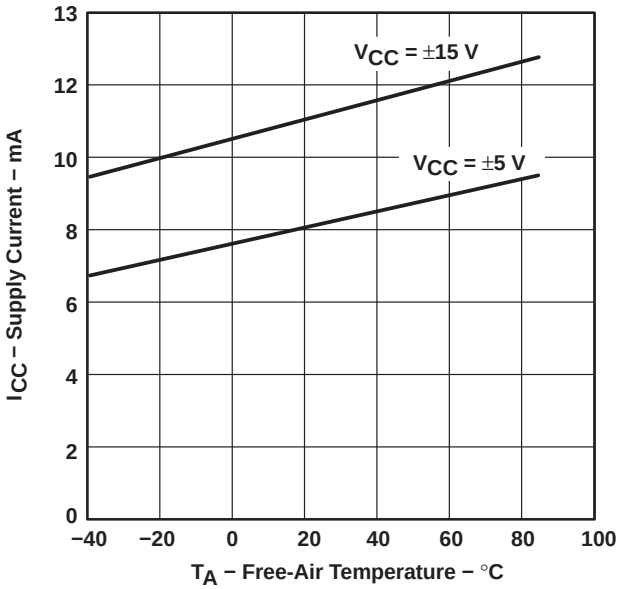

Figure 16

DRIVER
NORMALIZED FREQUENCY RESPONSE
vs
FREQUENCY

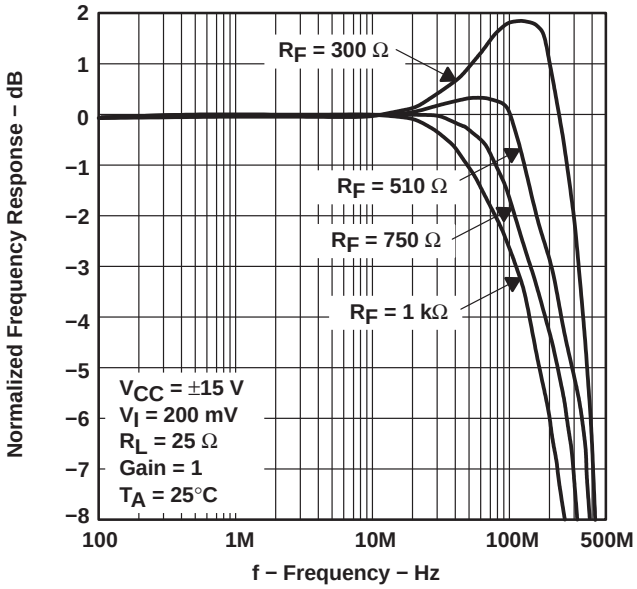

Figure 17

DRIVER
NORMALIZED FREQUENCY RESPONSE
vs
FREQUENCY

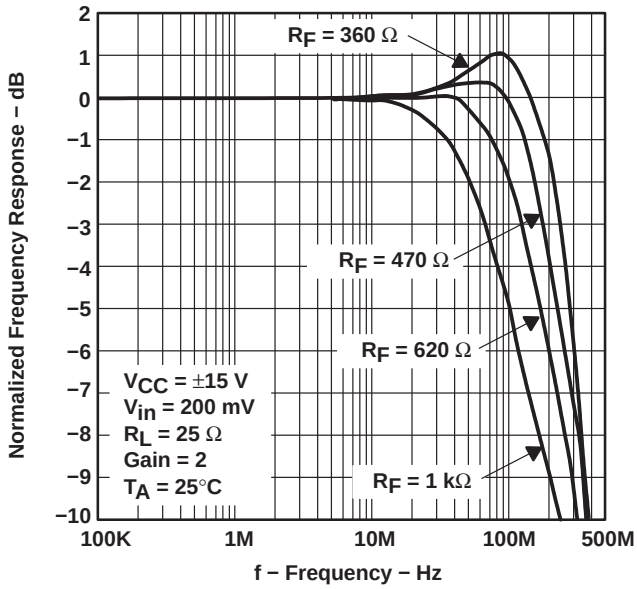

Figure 18

DRIVER
NORMALIZED OUTPUT RESPONSE
vs
FREQUENCY

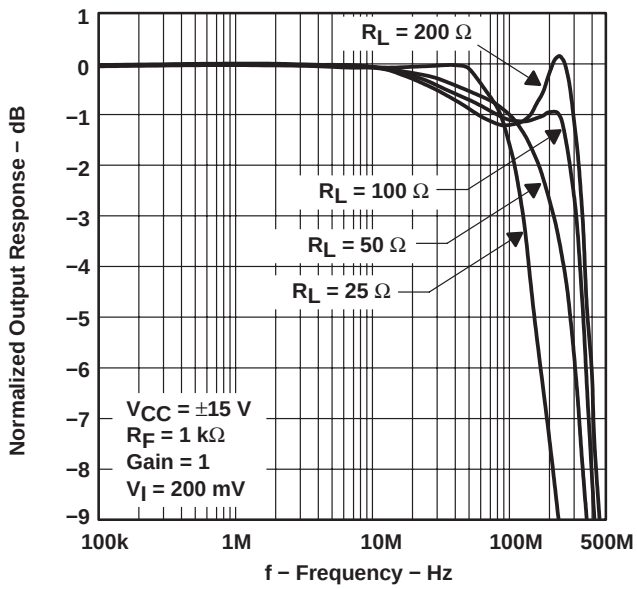

Figure 19

TYPICAL CHARACTERISTICS

DRIVER
NORMALIZED OUTPUT RESPONSE
vs
FREQUENCY

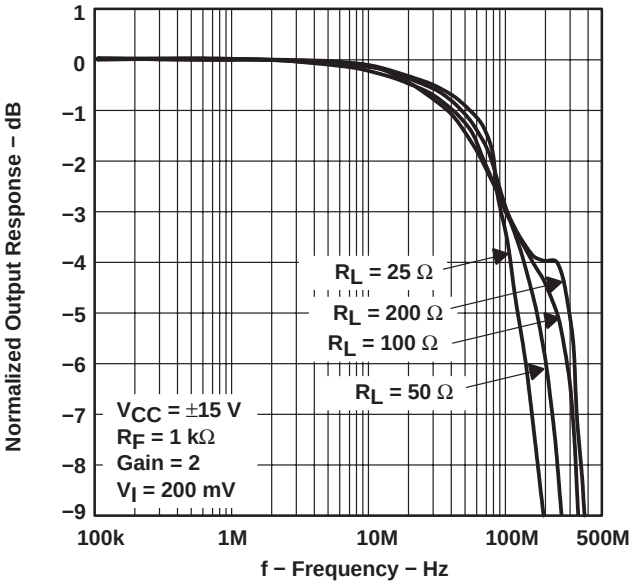

Figure 20

DRIVER
NORMALIZED OUTPUT RESPONSE
vs
FREQUENCY

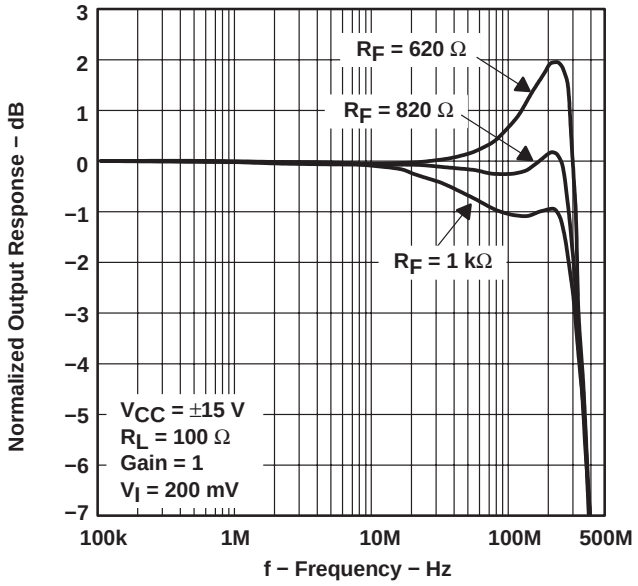

Figure 21

DRIVER
NORMALIZED OUTPUT RESPONSE
vs
FREQUENCY

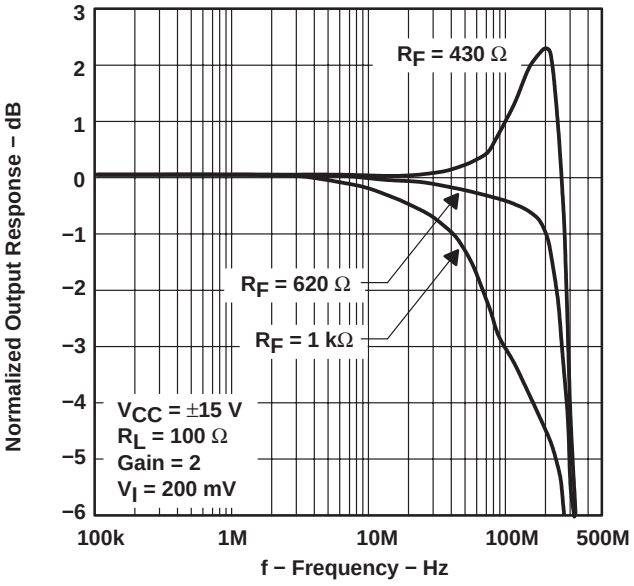

Figure 22

DRIVER
SINGLE-ENDED OUTPUT DISTORTION
vs
OUTPUT VOLTAGE

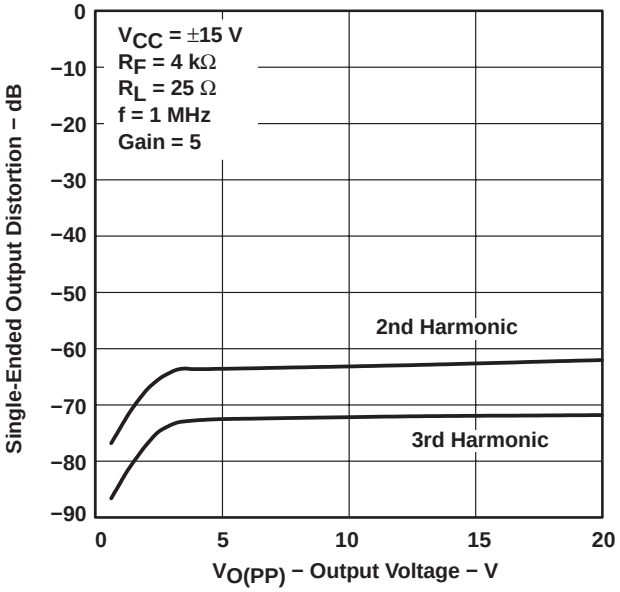

Figure 23

TYPICAL CHARACTERISTICS

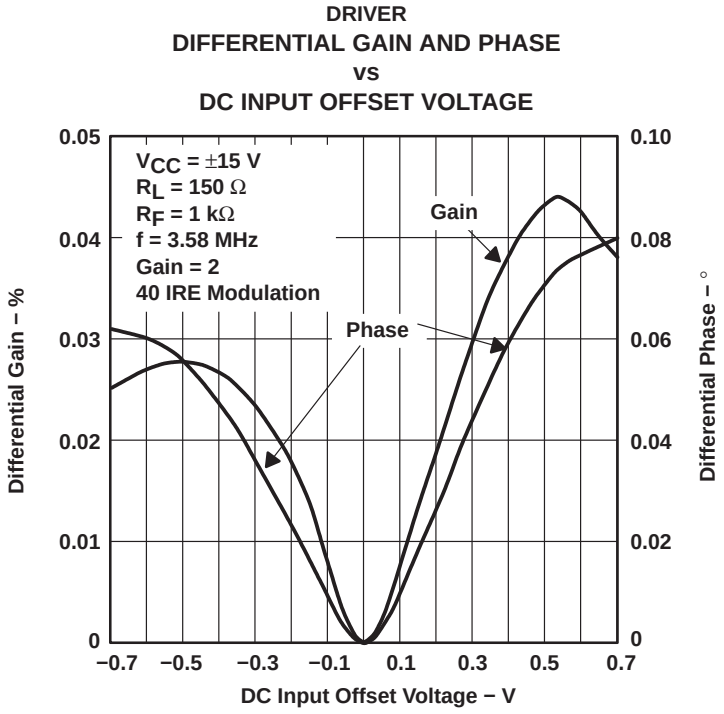

Figure 24

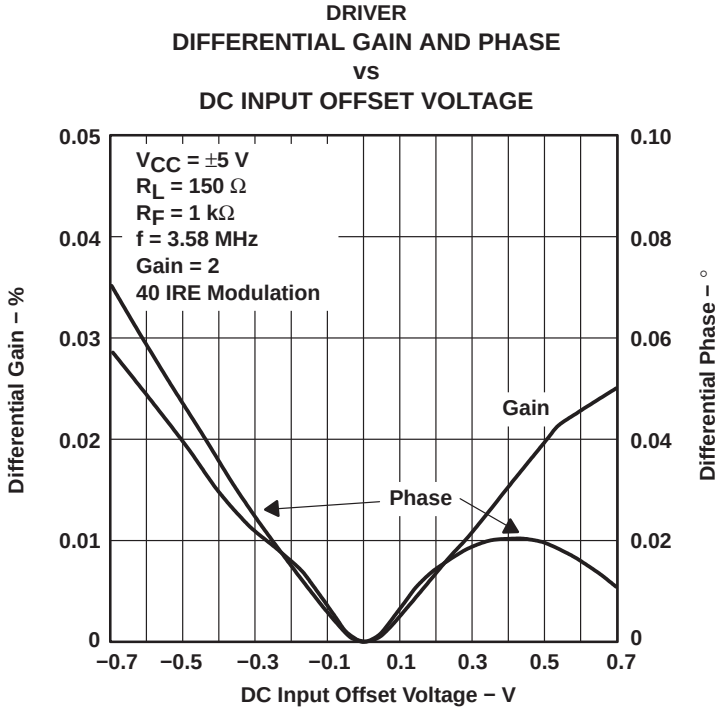

Figure 25

TYPICAL CHARACTERISTICS

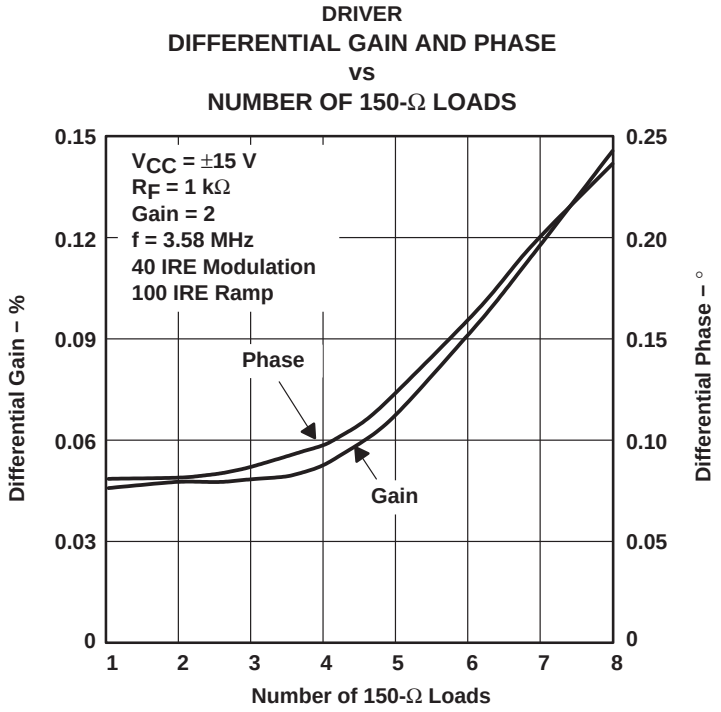

Figure 26

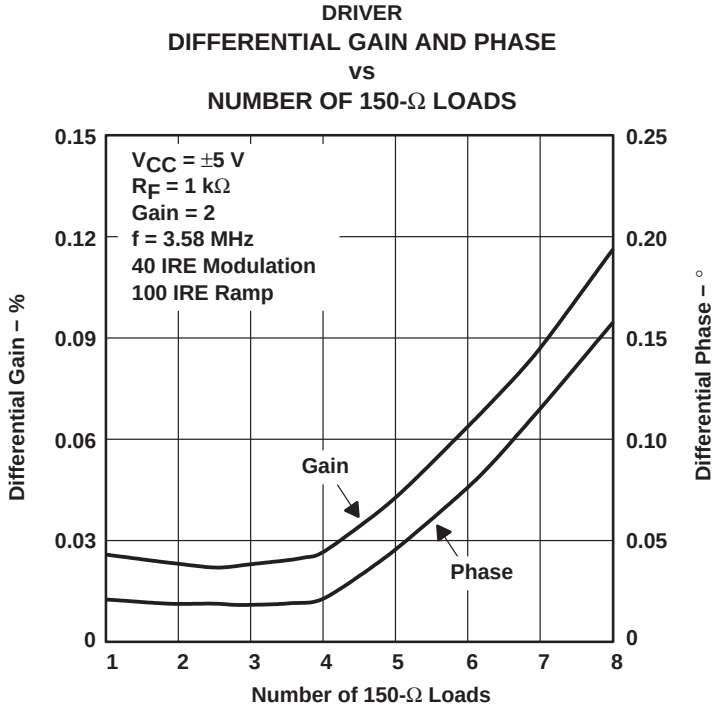

Figure 27

TYPICAL CHARACTERISTICS

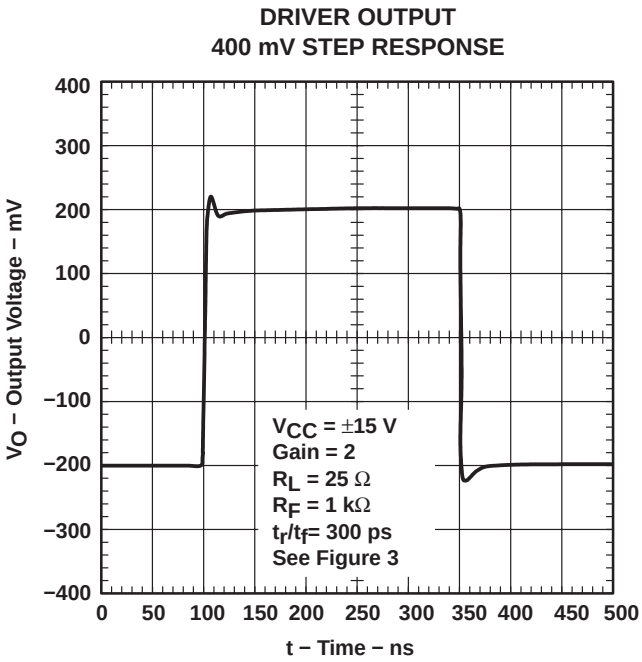

Figure 28

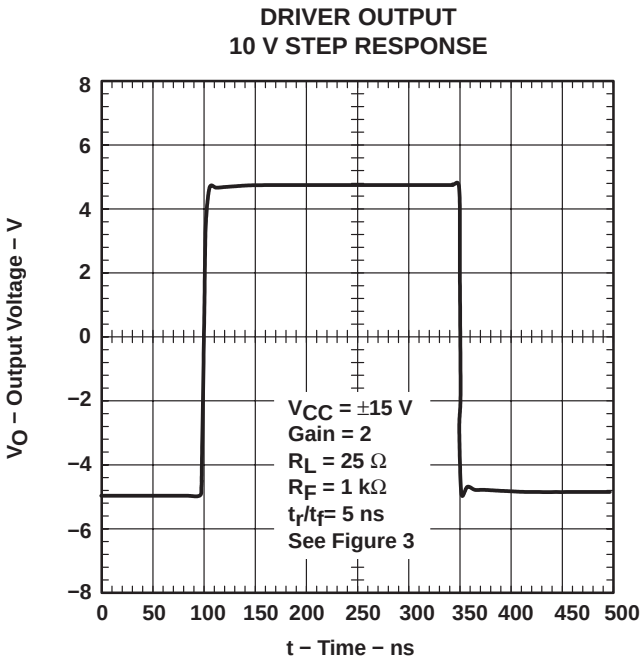

Figure 29

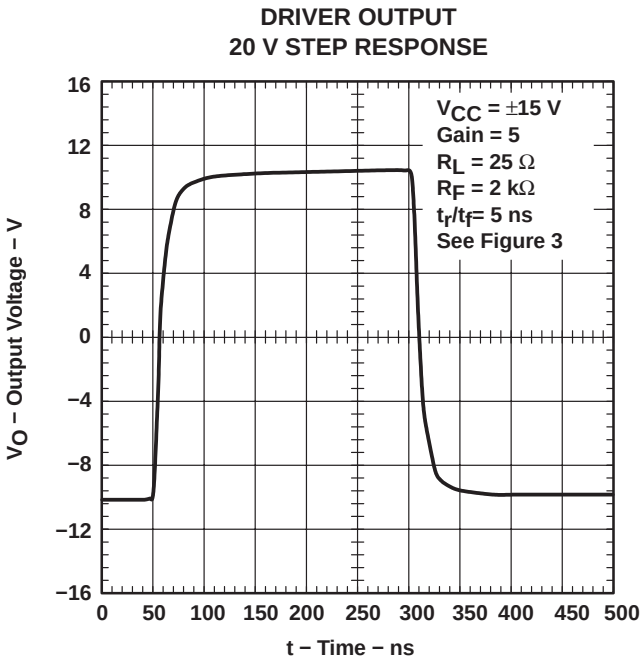

Figure 30

TYPICAL CHARACTERISTICS

RECEIVER
PEAK-TO-PEAK OUTPUT VOLTAGE SWING
vs
SUPPLY VOLTAGE

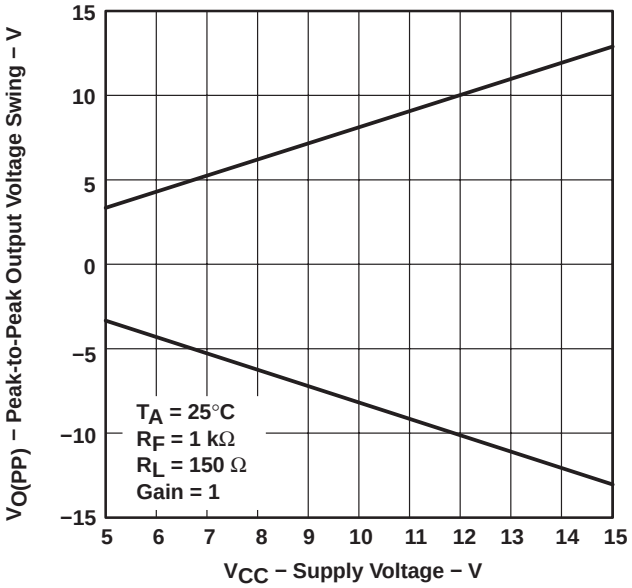

Figure 31

RECEIVER
PEAK-TO-PEAK OUTPUT VOLTAGE
vs
LOAD RESISTANCE

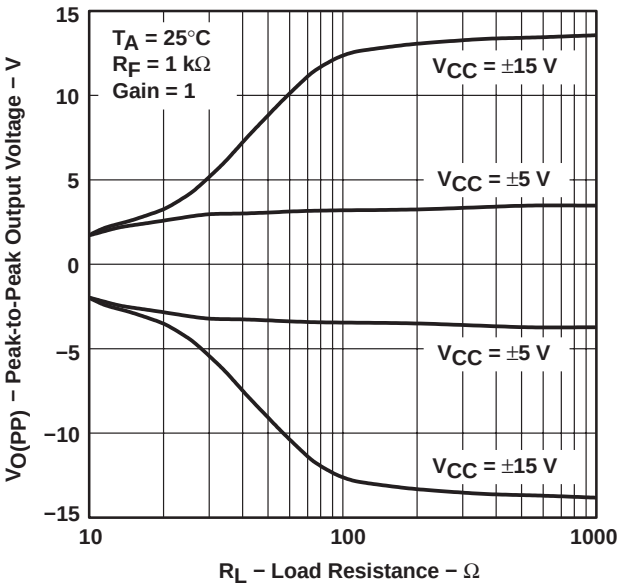

Figure 32

RECEIVER
INPUT OFFSET VOLTAGE
vs
FREE-AIR TEMPERATURE

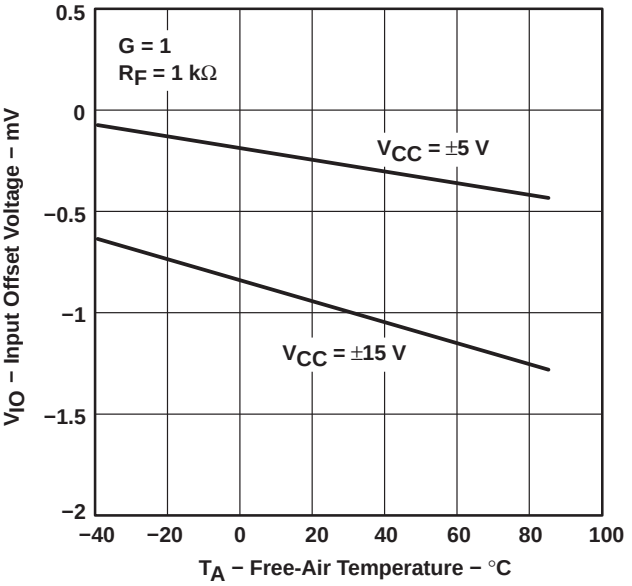

Figure 33

RECEIVER
INPUT BIAS CURRENT
vs
FREE-AIR TEMPERATURE

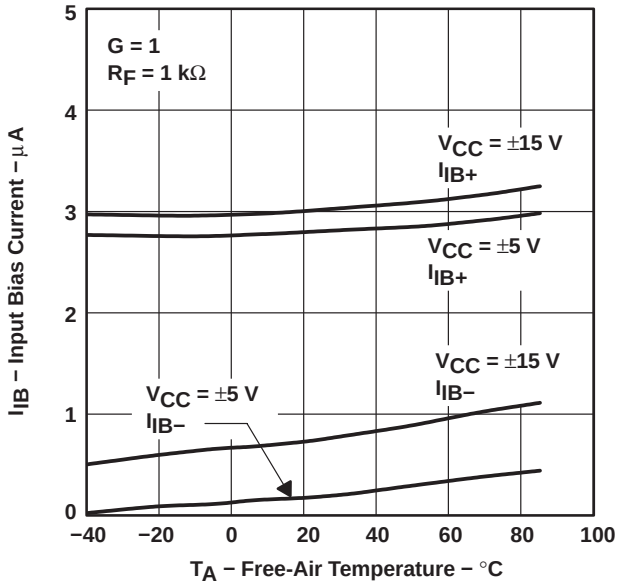

Figure 34

TYPICAL CHARACTERISTICS

RECEIVER
COMMON-MODE REJECTION RATIO
vs
FREE-AIR TEMPERATURE

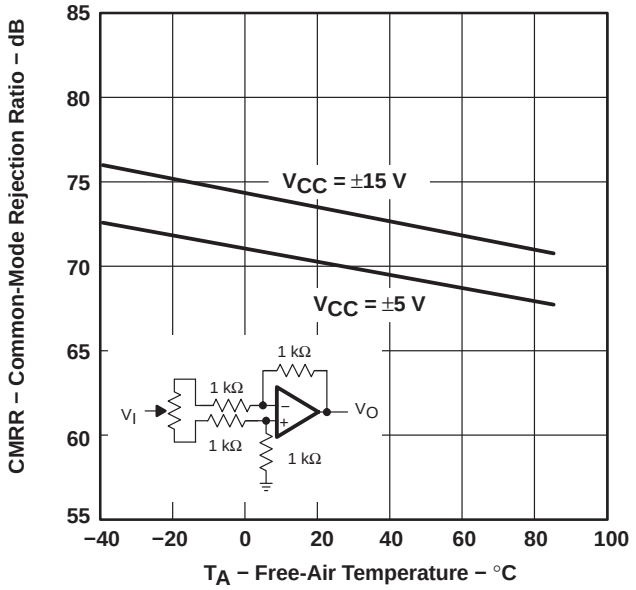

Figure 35

RECEIVER
INPUT-TO-OUTPUT CROSSTALK
vs
FREQUENCY

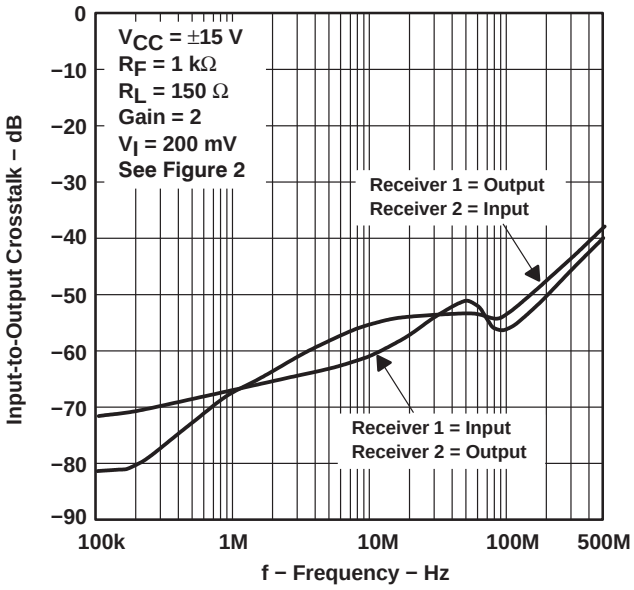

Figure 36

RECEIVER-TO-DRIVER CROSSTALK
vs
FREQUENCY

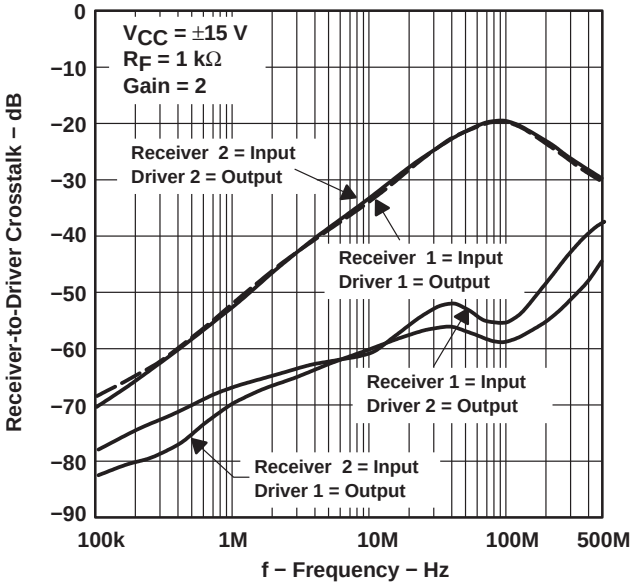

Figure 37

RECEIVER
POWER SUPPLY REJECTION RATIO
vs
FREE-AIR TEMPERATURE

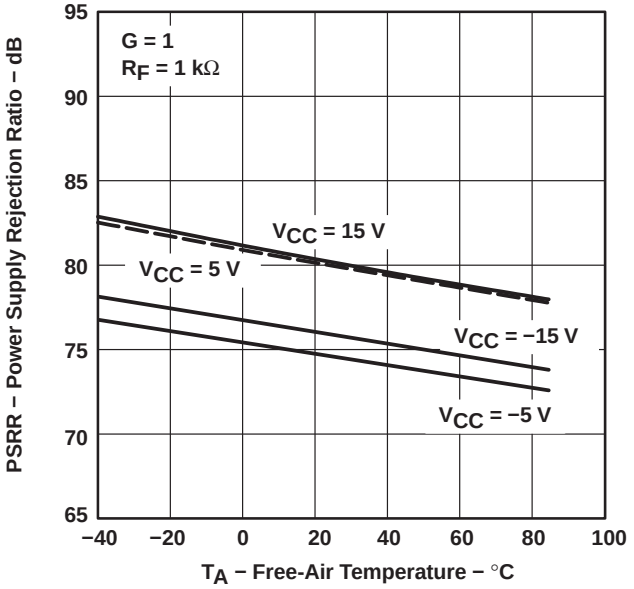

Figure 38

TYPICAL CHARACTERISTICS

RECEIVER SUPPLY CURRENT vs FREE-AIR TEMPERATURE

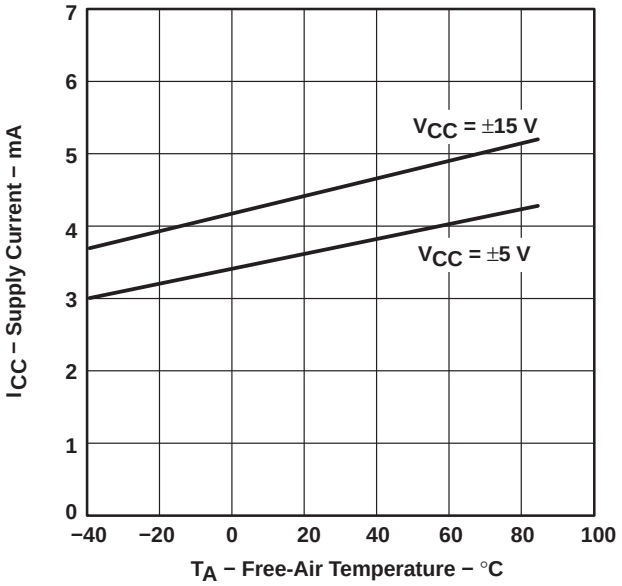

Figure 39

RECEIVER NORMALIZED OUTPUT RESPONSE vs FREQUENCY

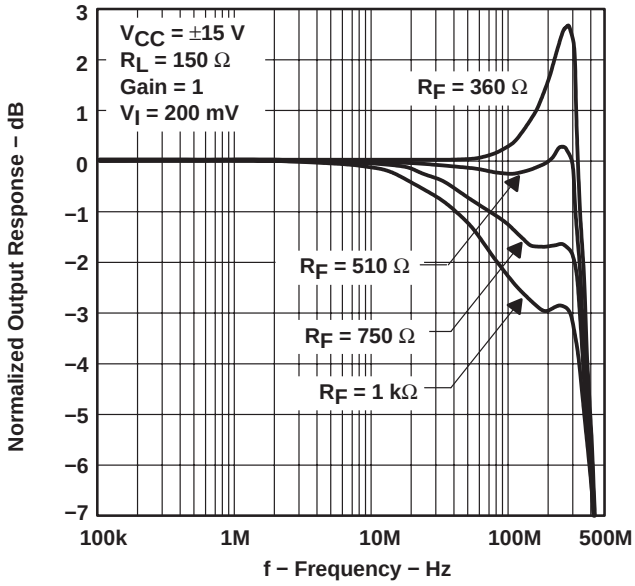

Figure 40

RECEIVER NORMALIZED OUTPUT RESPONSE vs FREQUENCY

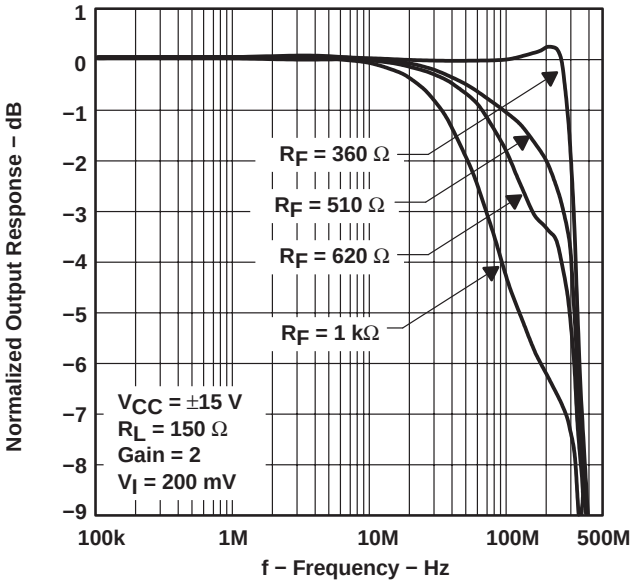

Figure 41

RECEIVER OUTPUT DISTORTION vs OUTPUT VOLTAGE

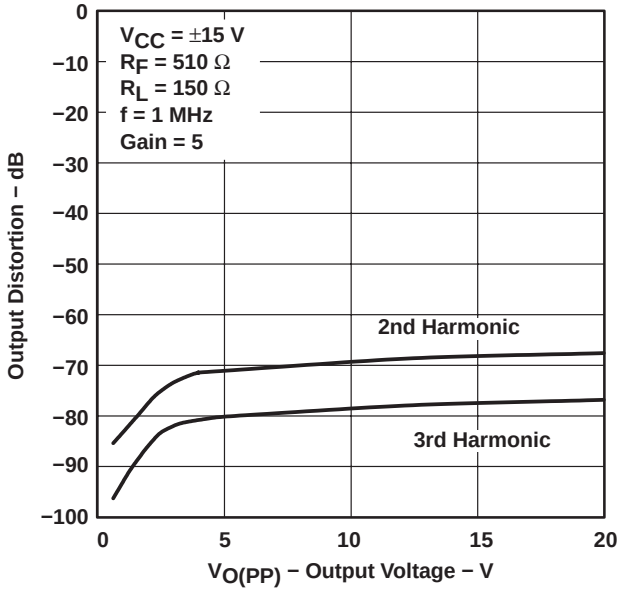

Figure 42

TYPICAL CHARACTERISTICS

RECEIVER
SMALL AND LARGE SIGNAL
FREQUENCY RESPONSE

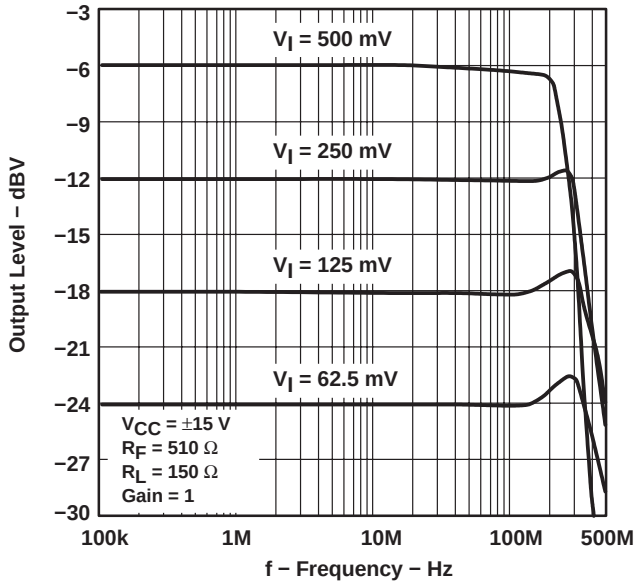

Figure 43

RECEIVER
SMALL AND LARGE SIGNAL
FREQUENCY RESPONSE

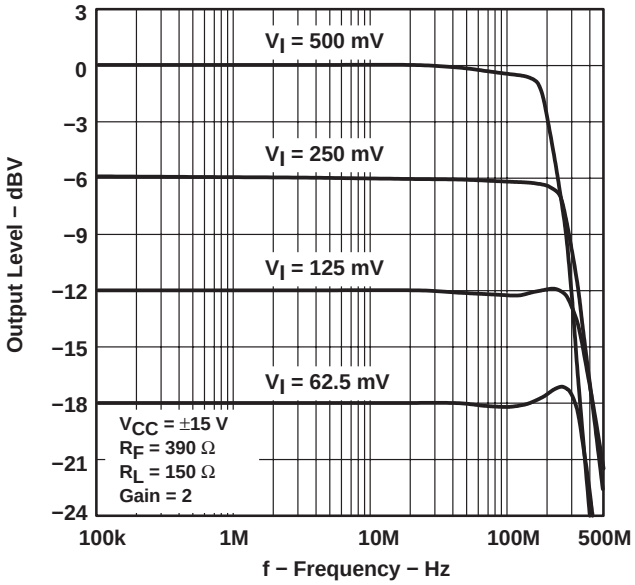

Figure 44

RECEIVER
DIFFERENTIAL GAIN AND PHASE
vs
DC INPUT OFFSET VOLTAGE

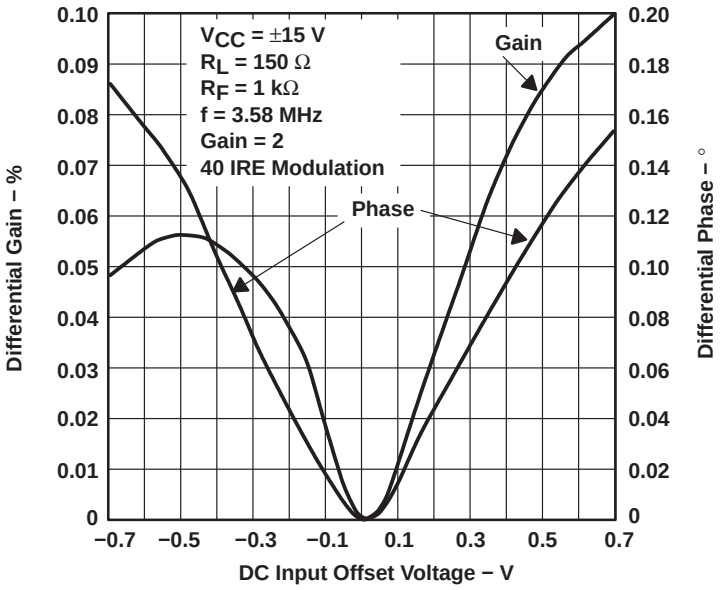

Figure 45

TYPICAL CHARACTERISTICS

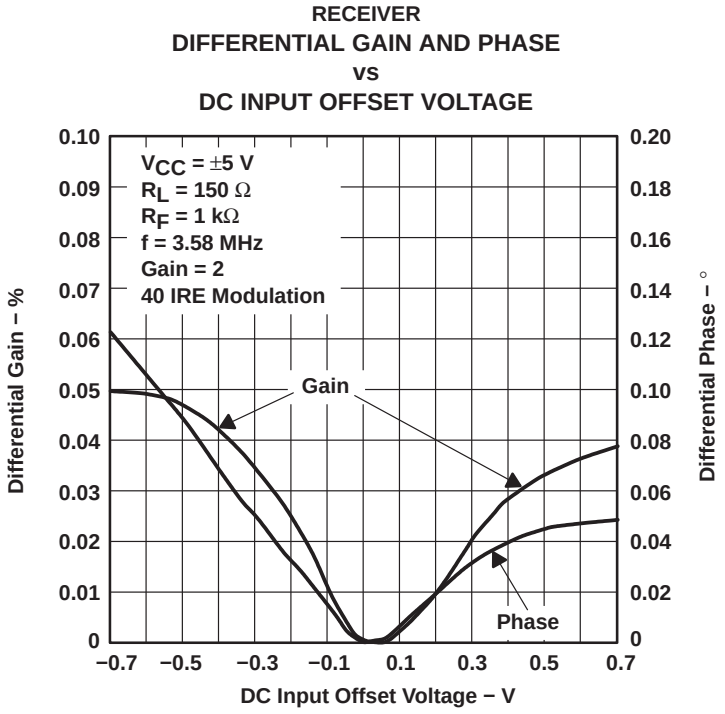

Figure 46

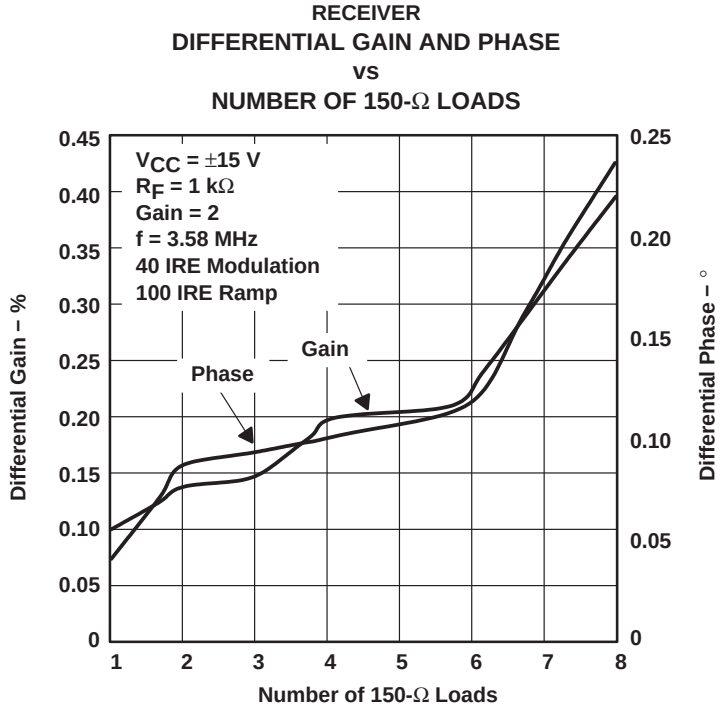

Figure 47

TYPICAL CHARACTERISTICS

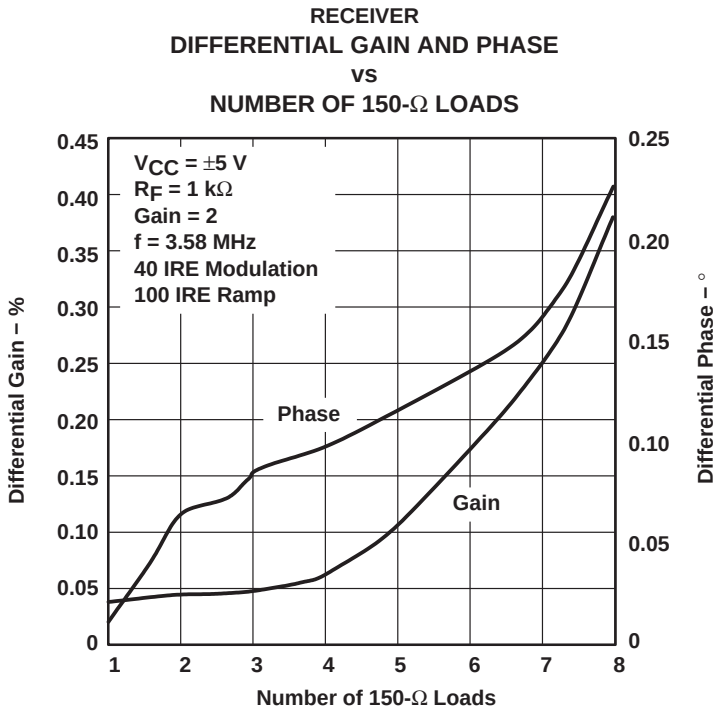

Figure 48

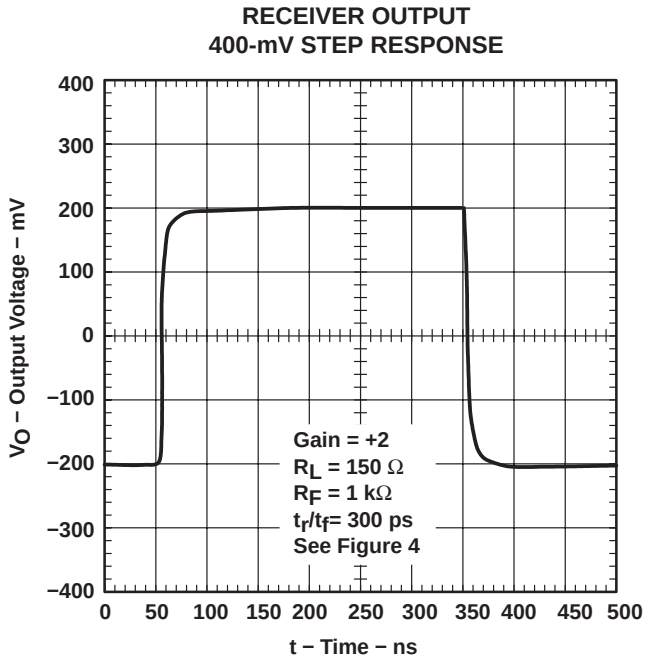

Figure 49

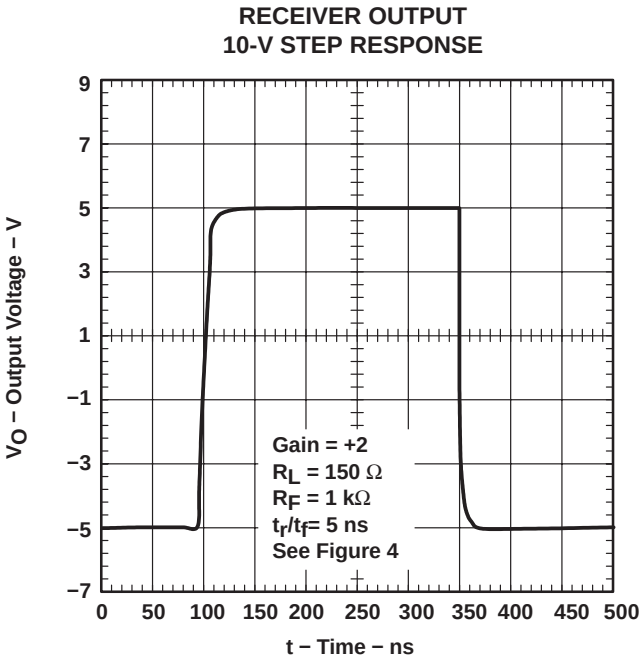

Figure 50

TYPICAL CHARACTERISTICS

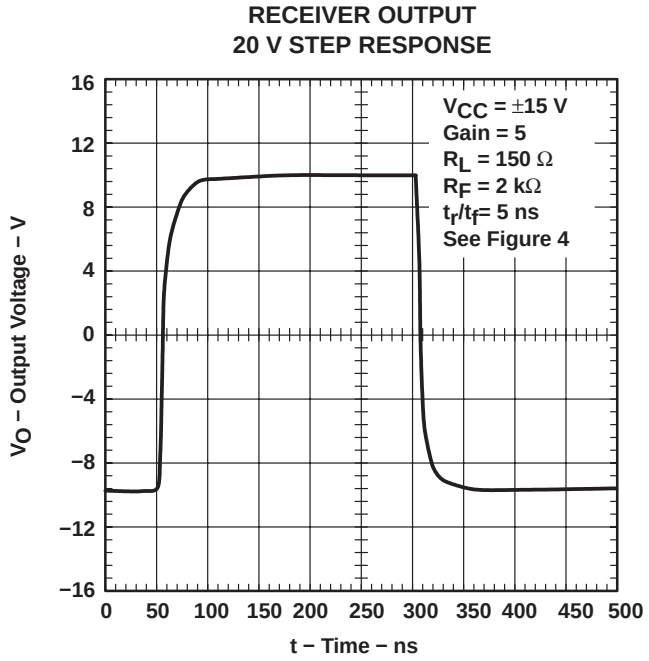

Figure 51

APPLICATION INFORMATION

The THS6002 contains four independent operational amplifiers. Two are designated as drivers because of their high output current capability, and two are designated as receivers. The receiver amplifiers are current feedback topology amplifiers made for high-speed operation and are capable of driving output loads of at least 80 mA. The drivers are also current feedback topology amplifiers. However, the drivers have been specifically designed to deliver the full power requirements of ADSL and therefore can deliver output currents of at least 400 mA at full output voltage.

The THS6002 is fabricated using Texas Instruments 30-V complementary bipolar process, HVBiCOM. This process provides excellent isolation and high slew rates that result in the device's excellent crosstalk and extremely low distortion.

independent power supplies

Each amplifier of the THS6002 has its own power supply pins. This was specifically done to solve a problem that often occurs when multiple devices in the same package share common power pins. This problem is crosstalk between the individual devices caused by currents flowing in common connections. Whenever the current required by one device flows through a common connection shared with another device, this current, in conjunction with the impedance in the shared line, produces an unwanted voltage on the power supply. Proper power supply decoupling and good device power supply rejection helps to reduce this unwanted signal. What is left is crosstalk.

However, with independent power supply pins for each device, the effects of crosstalk through common impedance in the power supplies is more easily managed. This is because it is much easier to achieve low common impedance on the PCB with copper etch than it is to achieve low impedance within the package with either bond wires or metal traces on silicon.

APPLICATION INFORMATION

power supply restrictions

Although the THS6002 is specified for operation from power supplies of ±5 V to ±15 V (or singled-ended power supply operation from 10 V to 30 V), and each amplifier has its own power supply pins, several precautions must be taken to assure proper operation.

1. The power supplies for each amplifier must be the same value. For example, if the drivers use ±15 volts, then the receivers must also use ±15 volts. Using ±15 volts for one amplifier and ±5 volts for another amplifier is not allowed.
2. To save power by powering down some of the amplifiers in the package, the following rules must be followed.
   - The amplifier designated Receiver 1 must always receive power whenever any other amplifier(s) within the package is used. This is because the internal startup circuitry uses the power from the Receiver 1 device.
   - The $-V_{CC}$ pins from all four devices must always be at the same potential.
   - Individual amplifiers are powered down by simply opening the $+V_{CC}$ connection.

As an example, if only the two drivers within the THS6002 are used, then the package power is reduced by removing the $+V_{CC}$ connection to Receiver 2. This reduces the power consumption by an amount equal to the quiescent power of a single receiver amplifier. The $+V_{CC}$ connections to Receiver 1 and both drivers are required. Also, all four amplifiers must be connected to $-V_{CC}$, including Receiver 2.

The THS6002 incorporates a standard Class A-B output stage. This means that some of the quiescent current is directed to the load as the load current increases. So under heavy load conditions, accurate power dissipation calculations are best achieved through actual measurements. For small loads, however, internal power dissipation for each amplifier in the THS6002 can be approximated by the following formula:

$$P_D \cong \left(2\,V_{CC}\,I_{CC}\right) + \left(V_{CC} - V_O\right) \times \left(\frac{V_O}{R_L}\right)$$

Where:

P_D = power dissipation for one amplifier
V_{CC} = split supply voltage
I_{CC} = supply current for that particular amplifier
V_O = output voltage of amplifier
R_L = load resistance

To find the total THS6002 power dissipation, we simply sum up all four amplifier power dissipation results. Generally, the worst case power dissipation occurs when the output voltage is one-half the V_{CC} voltage. One last note, which is often overlooked: the feedback resistor (R_F) is also a load to the output of the amplifier and should be taken into account for low value feedback resistors.

APPLICATION INFORMATION

device protection features

The THS6002 has two built-in protection features that protect the device against improper operation. The first protection mechanism is output current limiting. Should the output become shorted to ground the output current is automatically limited to the value given in the data sheet. While this protects the output against excessive current, the device internal power dissipation increases due to the high current and large voltage drop across the output transistors. Continuous output shorts are not recommended and could damage the device. Additionally, connection of the amplifier output to one of the supply rails ($\pm V_{CC}$) can cause failure of the device and is not recommended.

The second built-in protection feature is thermal shutdown. Should the internal junction temperature rise above approximately 180°C, the device automatically shuts down. Such a condition could exist with improper heat sinking or if the output is shorted to ground. When the abnormal condition is fixed, the internal thermal shutdown circuit automatically turns the device back on.

thermal information

The THS6002 is packaged in a thermally-enhanced DWP package, which is a member of the PowerPAD family of packages. This package is constructed using a downset leadframe upon which the die is mounted [see Figure 52(a) and Figure 52(b)]. This arrangement results in the lead frame being exposed as a thermal pad on the underside of the package [see Figure 52(c)]. Because this thermal pad has direct thermal contact with the die, excellent thermal performance can be achieved by providing a good thermal path away from the thermal pad.

The PowerPAD package allows for both assembly and thermal management in one manufacturing operation. During the surface-mount solder operation (when the leads are being soldered), the thermal pad can also be soldered to a copper area underneath the package. Through the use of thermal paths within this copper area, heat can be conducted away from the package into either a ground plane or other heat dissipating device. This is discussed in more detail in the *PCB design considerations* section of this document.

The PowerPAD package represents a breakthrough in combining the small area and ease of assembly of surface mount with the, heretofore, awkward mechanical methods of heatsinking.

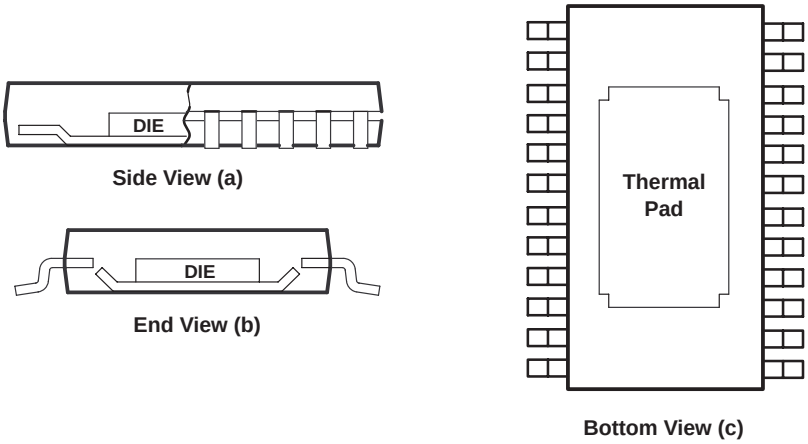

NOTE A: The thermal pad is electrically isolated from all terminals in the package.

Figure 52. Views of Thermally Enhanced DWP Package

APPLICATION INFORMATION

recommended feedback and gain resistor values

As with all current feedback amplifiers, the bandwidth of the THS6002 is an inversely proportional function of the value of the feedback resistor. This can be seen from Figures 17 and 18. For the driver, the recommended resistors for the optimum frequency response for a 25-Ω load system are 680-Ω for a gain = 1 and 620-Ω for a gain = 2 or −1. For the receivers, the recommended resistors for the optimum frequency response are 560 Ω for a gain = 1 and 390 Ω for a gain = 2 or −1. These should be used as a starting point and once optimum values are found, 1% tolerance resistors should be used to maintain frequency response characteristics. Because there is a finite amount of output resistance of the operational amplifier, load resistance can play a major part in frequency response. This is especially true with the drivers, which tend to drive low-impedance loads. This can be seen in Figure 7, Figure 19, and Figure 20. As the load resistance increases, the output resistance of the amplifier becomes less dominant at high frequencies. To compensate for this, the feedback resistor should change. For 100-Ω loads, it is recommended that the feedback resistor be changed to 820 Ω for a gain of 1 and 560 Ω for a gain of 2 or −1. Although, for most applications, a feedback resistor value of 1 kΩ is recommended, which is a good compromise between bandwidth and phase margin that yields a very stable amplifier.

Consistent with current feedback amplifiers, increasing the gain is best accomplished by changing the gain resistor, not the feedback resistor. This is because the bandwidth of the amplifier is dominated by the feedback resistor value and internal dominant-pole capacitor. The ability to control the amplifier gain independently of the bandwidth constitutes a major advantage of current feedback amplifiers over conventional voltage feedback amplifiers. Therefore, once a frequency response is found suitable to a particular application, adjust the value of the gain resistor to increase or decrease the overall amplifier gain.

Finally, it is important to realize the effects of the feedback resistance on distortion. Increasing the resistance decreases the loop gain and increases the distortion. It is also important to know that decreasing load impedance increases total harmonic distortion (THD). Typically, the third order harmonic distortion increases more than the second order harmonic distortion.

offset voltage

The output offset voltage, (V_{OO}) is the sum of the input offset voltage (V_{IO}) and both input bias currents (I_{IB}) times the corresponding gains. The following schematic and formula can be used to calculate the output offset voltage:

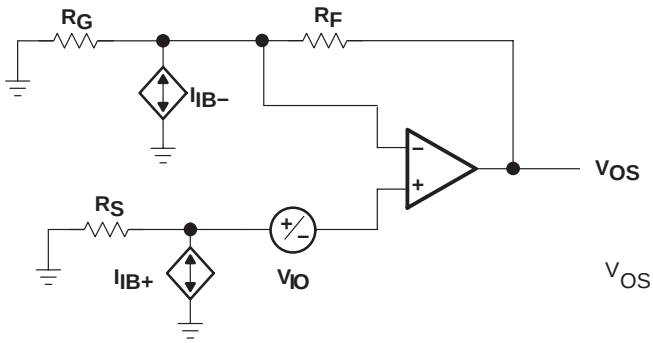

$$V_{OS} = \left(\pm V_{IO} \pm I_{IB+} R_S\right)\left(1 + \frac{R_F}{R_G}\right) \pm I_{IB-} R_F$$

Figure 53. Output Offset Voltage Model

APPLICATION INFORMATION

noise calculations and noise figure

Noise can cause errors on very small signals. This is especially true for the receiver amplifiers which are generally used for amplifying small signals coming over a transmission line. The noise model for current feedback amplifiers (CFB) is the same as voltage feedback amplifiers (VFB). The only difference between the two is that the CFB amplifiers generally specify different current noise parameters for each input while VFB amplifiers usually only specify one noise current parameter. The noise model is shown in Figure 54. This model includes all of the noise sources as follows:

- e_n = amplifier internal voltage noise (nV/$\sqrt{Hz}$)
- IN+ = noninverting current noise (pA/$\sqrt{Hz}$)
- IN− = inverting current noise (pA/$\sqrt{Hz}$)
- e_{Rx} = thermal voltage noise associated with each resistor ($e_{Rx} = 4\ kTR_x$)

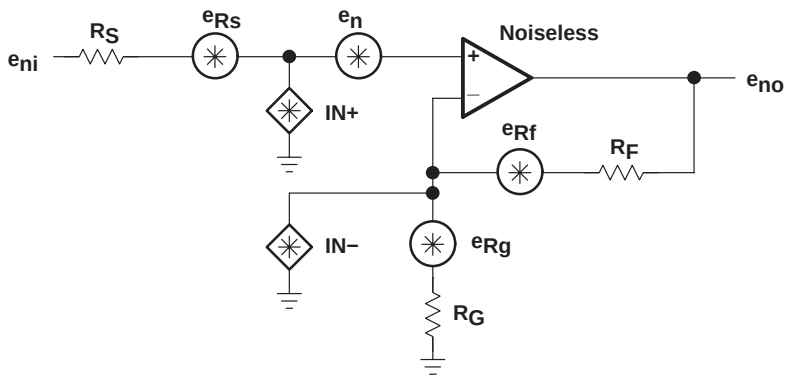

Figure 54. Noise Model

The total equivalent input noise density (e_{ni}) is calculated by using the following equation:

$$e_{ni} = \sqrt{(e_n)^2 + \left(IN + \times R_S\right)^2 + \left(IN- \times \left(R_F \parallel R_G\right)\right)^2 + 4\ kTR_S + 4\ kT\left(R_F \parallel R_G\right)}$$

Where:

k = Boltzmann's constant = 1.380658×10^{-23}
T = temperature in degrees Kelvin (273 +°C)
$R_F \parallel R_G$ = parallel resistance of R_F and R_G

To get the equivalent output noise of the amplifier, just multiply the equivalent input noise density (e_{ni}) by the overall amplifier gain (A_V).

$$e_{no} = e_{ni} A_V = e_{ni}\left(1 + \frac{R_F}{R_G}\right) \text{ (Noninverting Case)}$$

APPLICATION INFORMATION

noise calculations and noise figure (continued)

As the previous equations show, to keep noise at a minimum, small value resistors should be used. As the closed-loop gain is increased (by reducing R_G), the input noise is reduced considerably because of the parallel resistance term. This leads to the general conclusion that the most dominant noise sources are the source resistor (R_S) and the internal amplifier noise voltage (e_n). Because noise is summed in a root-mean-squares method, noise sources smaller than 25% of the largest noise source can be effectively ignored. This can greatly simplify the formula and make noise calculations much easier to calculate.

This brings up another noise measurement usually preferred in RF applications, the noise figure (NF). Noise figure is a measure of noise degradation caused by the amplifier. The value of the source resistance must be defined and is typically 50 Ω in RF applications.

$$NF = 10\log\left[\frac{e_{ni}^{2}}{e_{Rs}}\right]$$

Because the dominant noise components are generally the source resistance and the internal amplifier noise voltage, we can approximate noise figure as:

$$NF = 10\log\left[1 + \frac{\left[\left(e_n\right)^2 + \left(IN + \times R_S\right)^2\right]}{4\,kTR_S}\right]$$

The Figure 55 shows the noise figure graph for the THS6002.

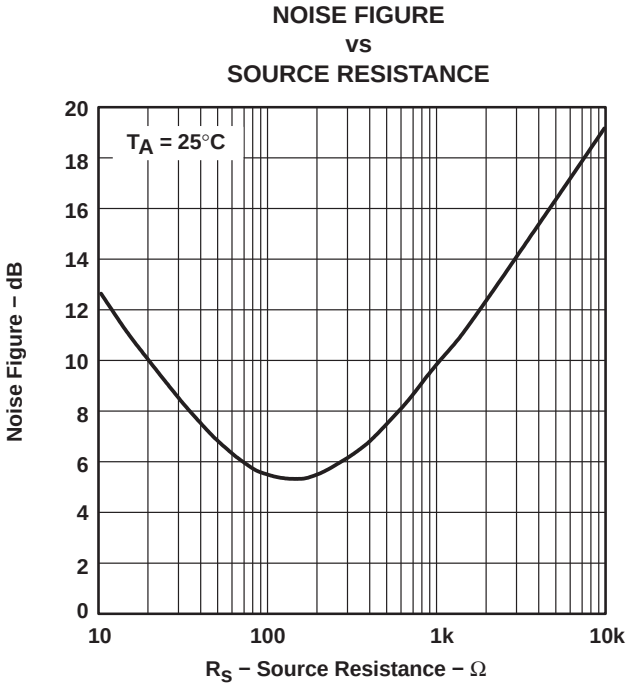

Figure 55. Noise Figure vs. Source Resistance

APPLICATION INFORMATION

PCB design considerations

Proper PCB design techniques in two areas are important to assure proper operation of the THS6002. These areas are high-speed layout techniques and thermal-management techniques. Because the THS6002 is a high-speed part, the following guidelines are recommended.

- Ground plane − It is essential that a ground plane be used on the board to provide all components with a low inductive ground connection. Although a ground connection directly to a terminal of the THS6002 is not necessarily required, it is recommended that the thermal pad of the package be tied to ground. This serves two functions. It provides a low inductive ground to the device substrate to minimize internal crosstalk and it provides the path for heat removal.
- Input stray capacitance − To minimize potential problems with amplifier oscillation, the capacitance at the inverting input of the amplifiers must be kept to a minimum. To do this, PCB trace runs to the inverting input must be as short as possible, the ground plane must be removed under any etch runs connected to the inverting input, and external components should be placed as close as possible to the inverting input. This is especially true in the noninverting configuration. An example of this can be seen in Figure 56, which shows what happens when 1.8 pF is added to the inverting input terminal in the noninverting configuration. The bandwidth increases dramatically at the expense of peaking. This is because some of the error current is flowing through the stray capacitor instead of the inverting node of the amplifier. Although, in the inverting mode, stray capacitance at the inverting input has little effect. This is because the inverting node is at a *virtual ground* and the voltage does not fluctuate nearly as much as in the noninverting configuration.

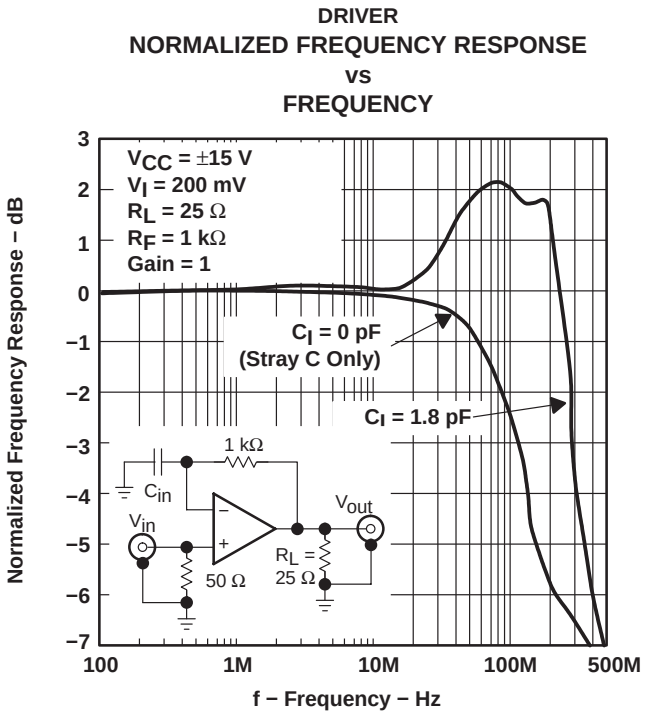

Figure 56. Driver Normalized Frequency Response vs. Frequency

APPLICATION INFORMATION

PCB design considerations (continued)

- Proper power supply decoupling − Use a minimum of a 6.8-µF tantalum capacitor in parallel with a 0.1-µF ceramic capacitor on each supply terminal. It may be possible to share the tantalum among several amplifiers depending on the application, but a 0.1-µF ceramic capacitor should always be used on the supply terminal of every amplifier. In addition, the 0.1-µF capacitor should be placed as close as possible to the supply terminal. As this distance increases, the inductance in the connecting etch makes the capacitor less effective. The designer should strive for distances of less than 0.1 inches (2,54 mm) between the device power terminal and the ceramic capacitors.

Because of its power dissipation, proper thermal management of the THS6002 is required. Although there are many ways to properly heatsink this device, the following steps illustrate one recommended approach for a multilayer PCB with an internal ground plane.

1. Prepare the PCB with a top side etch pattern as shown in Figure 57. There should be etch for the leads as well as etch for the thermal pad.
2. Place five holes in the area of the thermal pad. These holes should be 13 mils (0,33 mm) in diameter. They are kept small so that solder wicking through the holes is not a problem during reflow.
3. Place four more holes under the package, but outside the thermal pad area. These holes are 25 mils (0,635 mm) in diameter. They may be larger because they are not in the area to be soldered so that wicking is not a problem.
4. Connect all nine holes, the five within the thermal pad area and the four outside the pad area, to the internal ground plane.
5. When connecting these holes to the ground plane, do **not** use the typical web or spoke via connection methodology. Web connections have a high thermal resistance connection that is useful for slowing the heat transfer during soldering operations. This makes the soldering of vias that have plane connections easier. However, in this application, low thermal resistance is desired for the most efficient heat transfer. Therefore, the holes under the THS6002 package should make their connection to the internal ground plane with a complete connection around the entire circumference of the plated through hole.
6. The top-side solder mask should leave exposed the terminals of the package and the thermal pad area with its five holes. The four larger holes outside the thermal pad area, but still under the package, should be covered with solder mask.
7. Apply solder paste to the exposed thermal pad area and all of the operational amplifier terminals.
8. With these preparatory steps in place, the THS6002 is simply placed in position and run through the solder reflow operation as any standard surface mount component. This results in a part that is properly installed.

APPLICATION INFORMATION

PCB design considerations (continued)

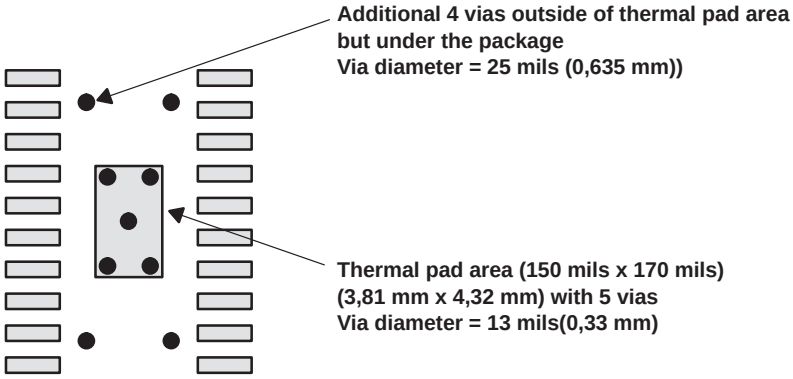

Figure 57. PowerPad PCB Etch and Via Pattern

The actual thermal performance achieved with the THS6002 in its PowerPAD package depends on the application. In the previous example, if the size of the internal ground plane is approximately 3 inches × 3 inches (76,2 mm x 76,2 mm), then the expected thermal coefficient, θ_{JA}, is about 21.5°C/W. For a given θ_{JA}, the maximum power dissipation is shown in Figure 58 and is calculated by the following formula:

$$P_D = \left(\frac{T_{MAX} - T_A}{\theta_{JA}}\right)$$

Where:

P_D = Maximum power dissipation of THS6002 (watts)
T_{MAX} = Absolute maximum junction temperature (150°C)
T_A = Free-ambient air temperature (°C)
θ_{JA} = $\theta_{JC} + \theta_{CA}$
θ_{JC} = Thermal coefficient from junction to case (0.37°C/W)
θ_{CA} = Thermal coefficient from case to ambient

More complete details of the PowerPAD installation process and thermal management techniques can be found in the Texas Instruments Technical Brief, *PowerPAD Thermally Enhanced Package.* This document can be found at the TI web site (www.ti.com) by searching on the key word PowerPAD. The document can also be ordered through your local TI sales office. Refer to literature number SLMA002 when ordering.

APPLICATION INFORMATION

PCB design considerations (continued)

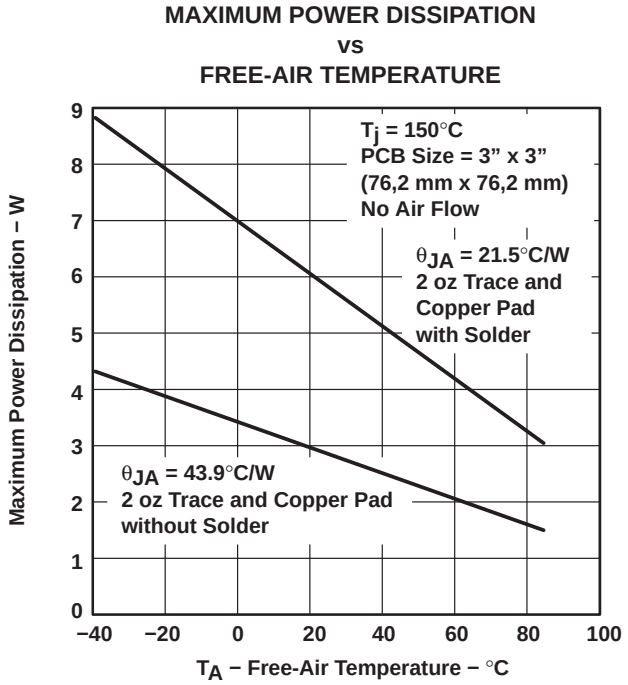

Figure 58. Maximum Power Dissipation vs Free-Air Temperature

APPLICATION INFORMATION

ADSL

The THS6002 was primarily designed as a line driver and line receiver for ADSL (asymmetrical digital subscriber line). The driver output stage has been sized to provide full ADSL power levels of 20 dBm onto the telephone lines. Although actual driver output peak voltages and currents vary with each particular ADSL application, the THS6002 is specified for a minimum full output current of 400 mA at its full output voltage of approximately 12 V. This performance meets the demanding needs of ADSL at the central office end of the telephone line. A typical ADSL schematic is shown in Figure 59.

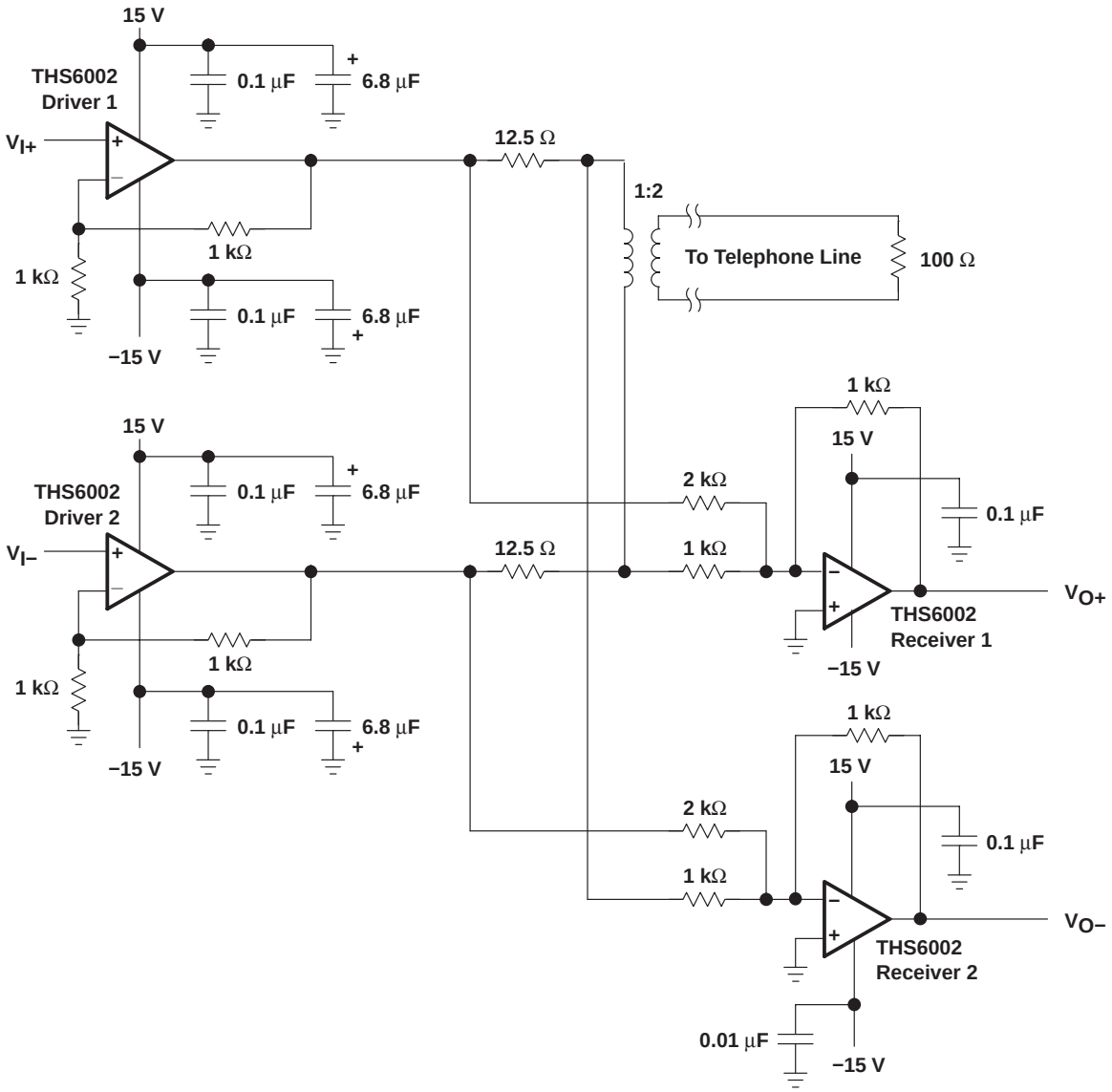

Figure 59. THS6002 ADSL Application

APPLICATION INFORMATION

ADSL (continued)

The ADSL transmit band consists of 255 separate carrier frequencies each with its own modulation and amplitude level. With such an implementation, it is imperative that signals put onto the telephone line have as low a distortion as possible. This is because any distortion either interferes directly with other ADSL carrier frequencies or it creates intermodulation products that interfere with ADSL carrier frequencies.

The THS6002 has been specifically designed for ultra low distortion by careful circuit implementation and by taking advantage of the superb characteristics of the complementary bipolar process. Driver single-ended distortion measurements are shown in Figure 23. It is commonly known that in the differential driver configuration, the second order harmonics tend to cancel out. Thus, the dominant total harmonic distortion (THD) will be primarily due to the third order harmonics. For this test, the load was 25 Ω and the output signal produced a 20 $V_{O(PP)}$ signal. Thus, the test was run at full signal and full load conditions. Because the feedback resistor used for the test was 4 kΩ, the distortion numbers are actually in a worst-case scenario. Distortion should be reduced as the feedback resistance drops. This is because the bandwidth of the amplifier increases dramatically, which allows the amplifier to react faster to any nonlinearities in the closed-loop system.

Another significant point is the fact that distortion decreases as the impedance load increases. This is because the output resistance of the amplifier becomes less significant as compared to the output load resistance.

APPLICATION INFORMATION

HDSL

Shown in Figure 60 is an example of the THS6002 being used for HDSL-2 applications. The receiver amplifiers within the THS6002 have been configured as predrivers for the driver amplifiers. This dual composite amplifier setup has the effect of raising the open loop gain for the combination of both amplifiers, thereby giving improved distortion performance.

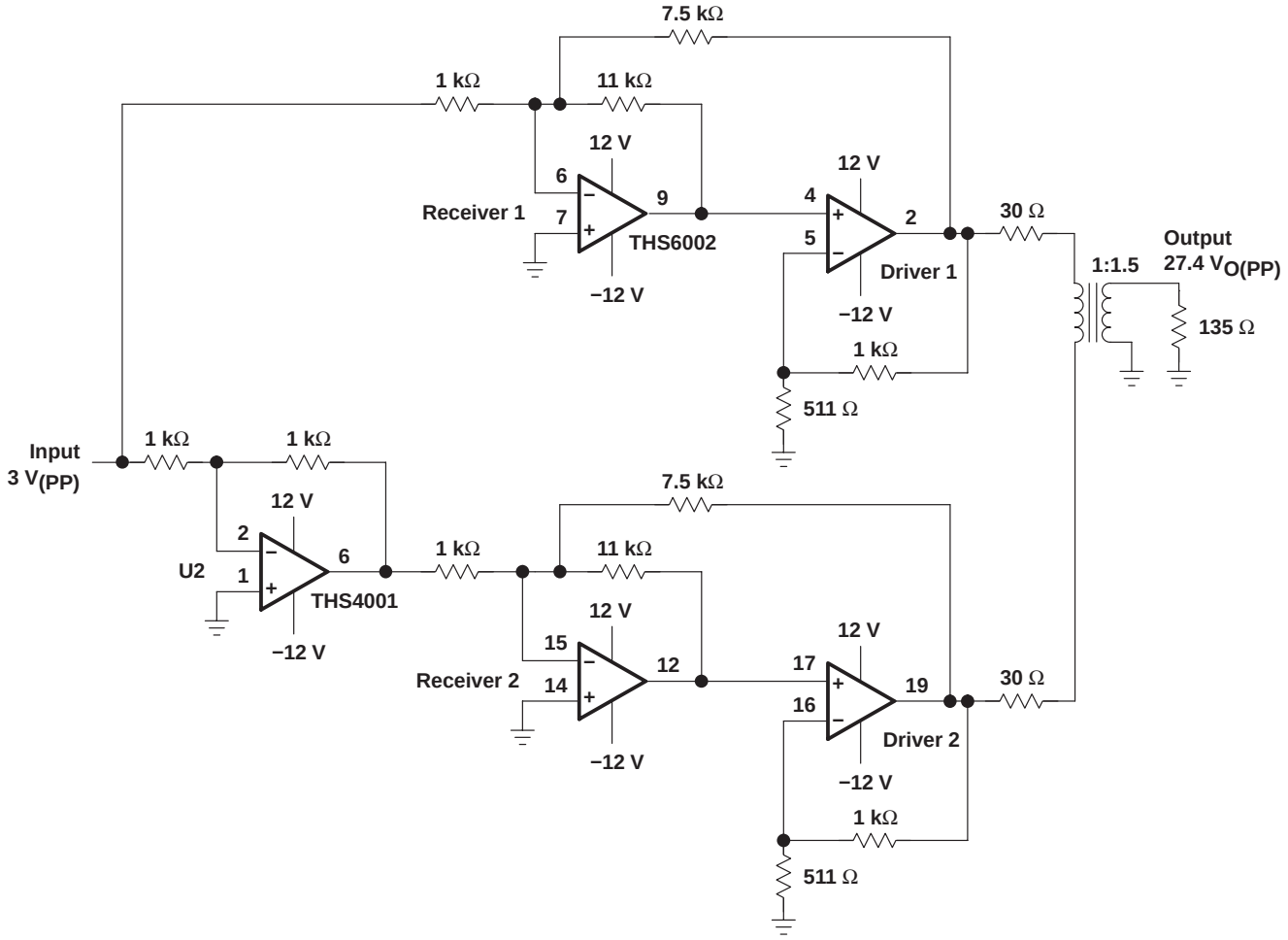

Figure 60. HDSL-2 Line Driver

general configurations

A common error for the first-time CFB user is to create a unity gain buffer amplifier by shorting the output directly to the inverting input. A CFB amplifier in this configuration is now commonly referred to as an oscillator. The THS6002, like all CFB amplifiers, **must** have a feedback resistor for stable operation. Additionally, placing capacitors directly from the output to the inverting input is not recommended. This is because, at high frequencies, a capacitor has a very low impedance. This results in an unstable amplifier and should not be considered when using a current-feedback amplifier. Because of this, integrators and simple low-pass filters, which are easily implemented on a VFB amplifier, have to be designed slightly differently. If filtering is required, simply place an RC-filter at the noninverting terminal of the operational-amplifier (see Figure 61).

APPLICATION INFORMATION

general configurations (continued)

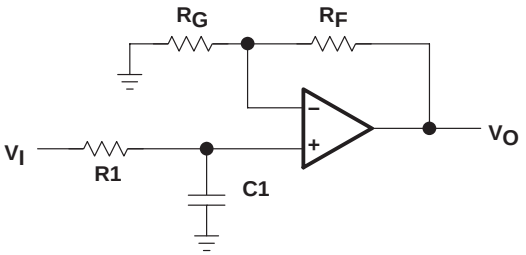

$$\frac{V_O}{V_I} = \left(1 + \frac{R_F}{R_G}\right)\left(\frac{1}{1 + sR1C1}\right)$$

$$f_{-3dB} = \frac{1}{2\pi R1C1}$$

Figure 61. Single-Pole Low-Pass Filter

If a multiple pole filter is required, the use of a Sallen-Key filter can work very well with CFB amplifiers. This is because the filtering elements are not in the negative feedback loop and stability is not compromised. Because of their high slew-rates and high bandwidths, CFB amplifiers can create very accurate signals and help minimize distortion. An example is shown in Figure 62.

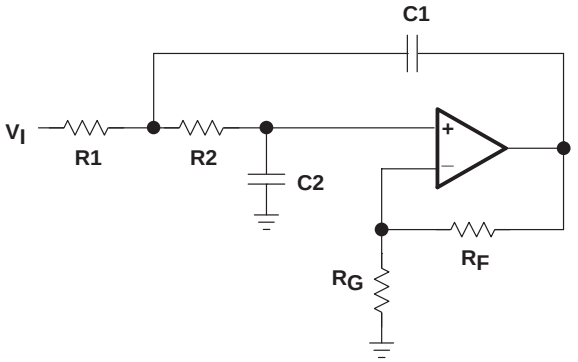

R1 = R2 = R
C1 = C2 = C
Q = Peaking Factor
(Butterworth Q = 0.707)

$$f_{-3dB} = \frac{1}{2\pi RC}$$

$$R_G = \frac{R_F}{\left(2 - \frac{1}{Q}\right)}$$

Figure 62. 2-Pole Low-Pass Sallen-Key Filter

There are two simple ways to create an integrator with a CFB amplifier. The first one shown in Figure 63 adds a resistor in series with the capacitor. This is acceptable because at high frequencies, the resistor is dominant and the feedback impedance never drops below the resistor value. The second one shown in Figure 64 uses positive feedback to create the integration. Caution is advised because oscillations can occur because of the positive feedback.

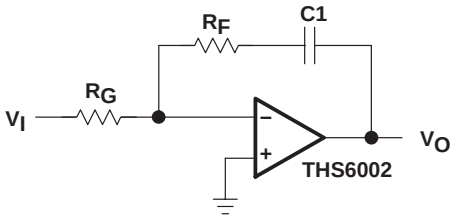

$$\frac{V_O}{V_I} = \left(\frac{R_F}{R_G}\right)\left(\frac{S + \frac{1}{R_F C1}}{S}\right)$$

Figure 63. Inverting CFB Integrator

APPLICATION INFORMATION

general configurations (continued)

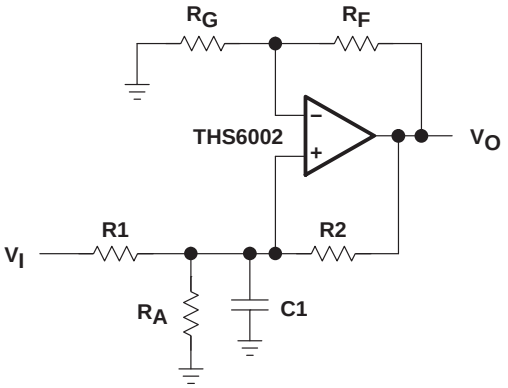

For Stable Operation:

$$\frac{R2}{R1 \parallel R_A} \geq \frac{R_F}{R_G}$$

$$V_O \cong V_I \left(\frac{1 + \frac{R_F}{R_G}}{sR1C1} \right)$$

Figure 64. Non-Inverting CFB Integrator

Another good use for the THS6002 driver amplifiers are as very good video distribution amplifiers. One characteristic of distribution amplifiers is the fact that the differential phase (DP) and the differential gain (DG) are compromised as the number of lines increases and the closed-loop gain increases. Be sure to use termination resistors throughout the distribution system to minimize reflections and capacitive loading.

PACKAGING INFORMATION

Orderable Device	Status (1)	Package Type	Package Drawing	Pins	Package Qty	Eco Plan (2)	Lead/Ball Finish (6)	MSL Peak Temp (3)	Op Temp (°C)	Device Marking (4/5)	Samples
THS6002CDWP	ACTIVE	SO PowerPAD	DWP	20	25	Green (RoHS & no Sb/Br)	CU NIPDAU	Level-2-260C-1 YEAR	0 to 70	THS6002C	Samples
THS6002CDWPG4	ACTIVE	SO PowerPAD	DWP	20	25	Green (RoHS & no Sb/Br)	CU NIPDAU	Level-2-260C-1 YEAR	0 to 70	THS6002C	Samples
THS6002IDWP	ACTIVE	SO PowerPAD	DWP	20	25	Green (RoHS & no Sb/Br)	CU NIPDAU	Level-2-260C-1 YEAR	-40 to 85	THS6002I	Samples
THS6002IDWPR	ACTIVE	SO PowerPAD	DWP	20	2000	Green (RoHS & no Sb/Br)	CU NIPDAU	Level-2-260C-1 YEAR	-40 to 85	THS6002I	Samples

(1) The marketing status values are defined as follows:
ACTIVE: Product device recommended for new designs.
LIFEBUY: TI has announced that the device will be discontinued, and a lifetime-buy period is in effect.
NRND: Not recommended for new designs. Device is in production to support existing customers, but TI does not recommend using this part in a new design.
PREVIEW: Device has been announced but is not in production. Samples may or may not be available.
OBSOLETE: TI has discontinued the production of the device.

(2) Eco Plan - The planned eco-friendly classification: Pb-Free (RoHS), Pb-Free (RoHS Exempt), or Green (RoHS & no Sb/Br) - please check http://www.ti.com/productcontent for the latest availability information and additional product content details.
TBD: The Pb-Free/Green conversion plan has not been defined.
Pb-Free (RoHS): TI's terms "Lead-Free" or "Pb-Free" mean semiconductor products that are compatible with the current RoHS requirements for all 6 substances, including the requirement that lead not exceed 0.1% by weight in homogeneous materials. Where designed to be soldered at high temperatures, TI Pb-Free products are suitable for use in specified lead-free processes.
Pb-Free (RoHS Exempt): This component has a RoHS exemption for either 1) lead-based flip-chip solder bumps used between the die and package, or 2) lead-based die adhesive used between the die and leadframe. The component is otherwise considered Pb-Free (RoHS compatible) as defined above.
Green (RoHS & no Sb/Br): TI defines "Green" to mean Pb-Free (RoHS compatible), and free of Bromine (Br) and Antimony (Sb) based flame retardants (Br or Sb do not exceed 0.1% by weight in homogeneous material)

(3) MSL, Peak Temp. - The Moisture Sensitivity Level rating according to the JEDEC industry standard classifications, and peak solder temperature.

(4) There may be additional marking, which relates to the logo, the lot trace code information, or the environmental category on the device.

(5) Multiple Device Markings will be inside parentheses. Only one Device Marking contained in parentheses and separated by a "~" will appear on a device. If a line is indented then it is a continuation of the previous line and the two combined represent the entire Device Marking for that device.

(6) Lead/Ball Finish - Orderable Devices may have multiple material finish options. Finish options are separated by a vertical ruled line. Lead/Ball Finish values may wrap to two lines if the finish value exceeds the maximum column width.

Important Information and Disclaimer: The information provided on this page represents TI's knowledge and belief as of the date that it is provided. TI bases its knowledge and belief on information provided by third parties, and makes no representation or warranty as to the accuracy of such information. Efforts are underway to better integrate information from third parties. TI has taken and continues to take reasonable steps to provide representative and accurate information but may not have conducted destructive testing or chemical analysis on incoming materials and chemicals. TI and TI suppliers consider certain information to be proprietary, and thus CAS numbers and other limited information may not be available for release.

In no event shall TI's liability arising out of such information exceed the total purchase price of the TI part(s) at issue in this document sold by TI to Customer on an annual basis.

TAPE AND REEL INFORMATION

REEL DIMENSIONS

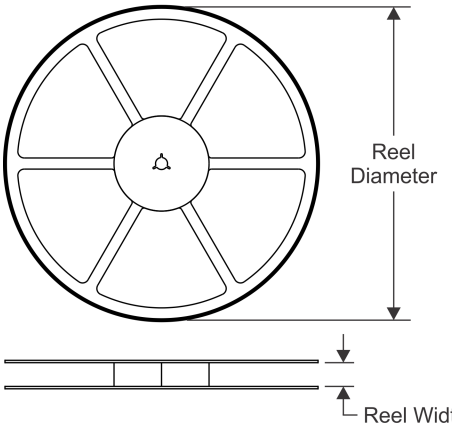

TAPE DIMENSIONS

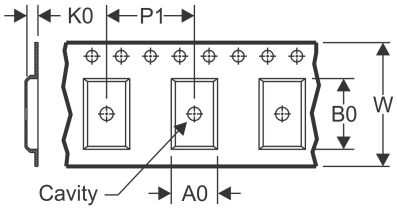

A0	Dimension designed to accommodate the component width
B0	Dimension designed to accommodate the component length
K0	Dimension designed to accommodate the component thickness
W	Overall width of the carrier tape
P1	Pitch between successive cavity centers

QUADRANT ASSIGNMENTS FOR PIN 1 ORIENTATION IN TAPE

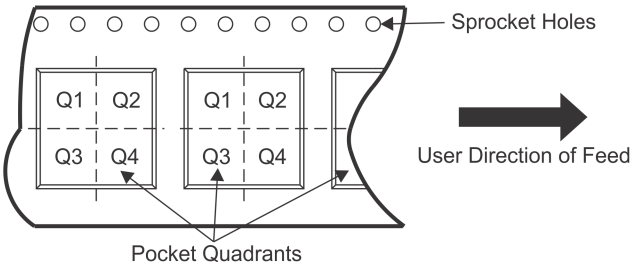

*All dimensions are nominal

Device	Package Type	Package Drawing	Pins	SPQ	Reel Diameter (mm)	Reel Width W1 (mm)	A0 (mm)	B0 (mm)	K0 (mm)	P1 (mm)	W (mm)	Pin1 Quadrant
THS6002IDWPR	SO Power PAD	DWP	20	2000	330.0	24.4	10.8	13.3	2.7	12.0	24.0	Q1

TAPE AND REEL BOX DIMENSIONS

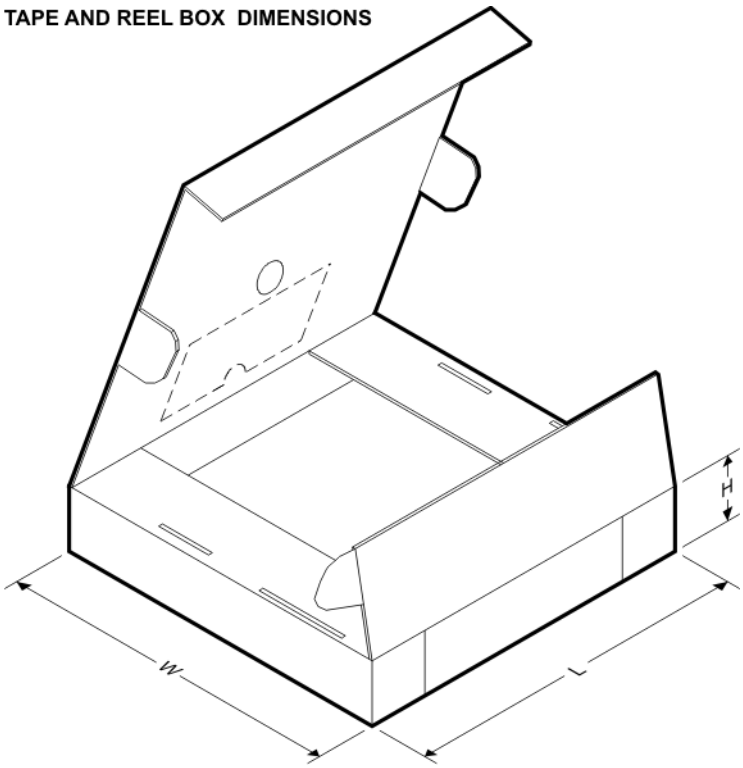

*All dimensions are nominal

Device	Package Type	Package Drawing	Pins	SPQ	Length (mm)	Width (mm)	Height (mm)
THS6002IDWPR	SO PowerPAD	DWP	20	2000	350.0	350.0	43.0

DWP (R–PDSO–G**) PowerPAD™ PLASTIC SMALL–OUTLINE PACKAGE

20 PINS SHOWN

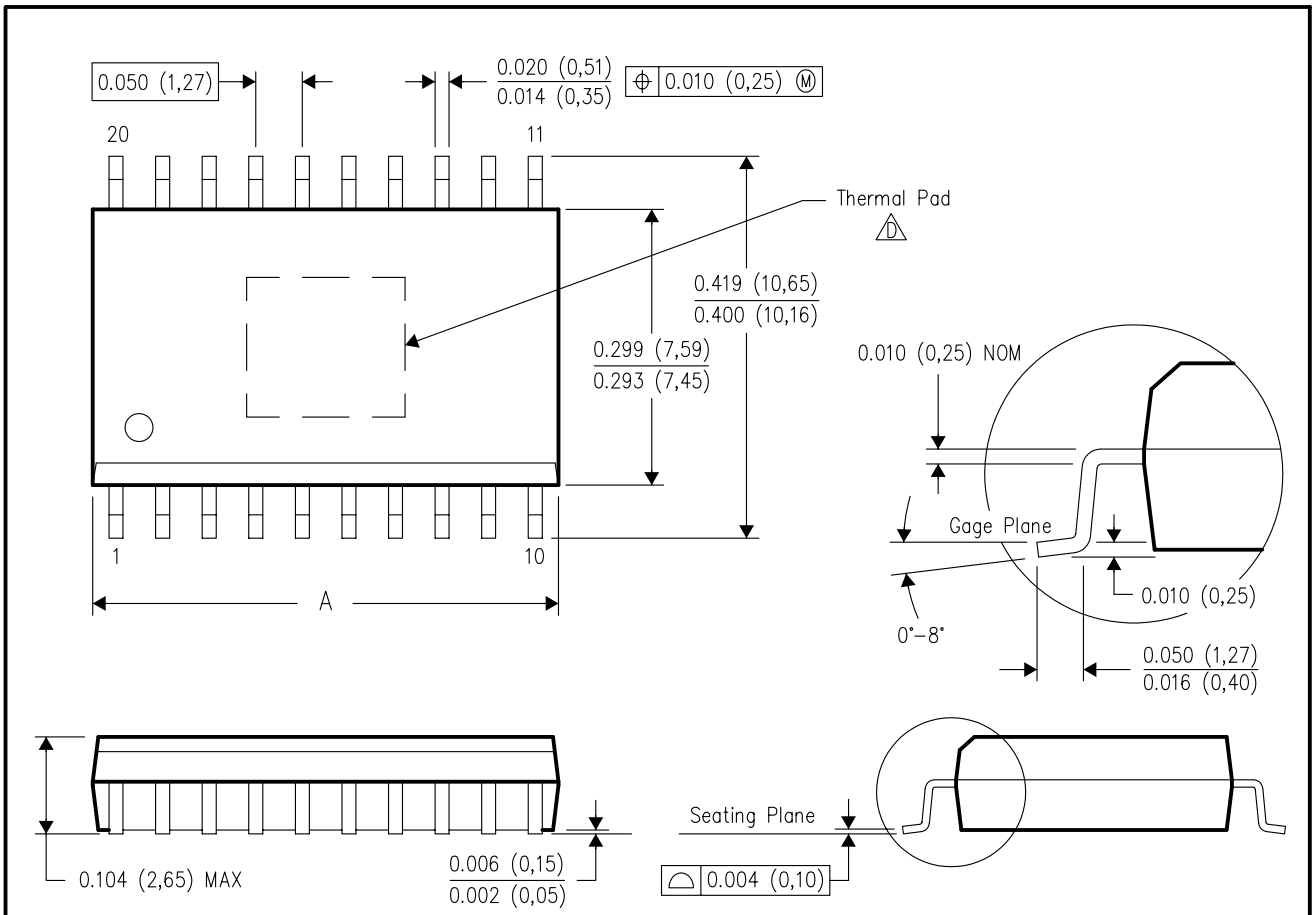

DIM \ PINS **	16	20	24	28
A MAX	0.410 (10,41)	0.510 (12,95)	0.610 (15,49)	0.710 (18,03)
A MIN	0.400 (10,16)	0.500 (12,70)	0.600 (15,24)	0.700 (17,78)

4147575/C 02/05

NOTES:
A. All linear dimensions are in inches (millimeters).
B. This drawing is subject to change without notice.
C. Body dimensions do not include mold flash or protrusion not to exceed 0.006 (0,15).
D. This package is designed to be soldered to a thermal pad on the board. Refer to Technical Brief, PowerPad Thermally Enhanced Package, Texas Instruments Literature No. SLMA002 for information regarding recommended board layout. This document is available at www.ti.com <http://www.ti.com>. See the product data sheet for details regarding the exposed thermal pad dimensions.

PowerPAD is a trademark of Texas Instruments.

DWP (R-PDSO-G20) PowerPAD™ PLASTIC SMALL OUTLINE

THERMAL INFORMATION

This PowerPAD™ package incorporates an exposed thermal pad that is designed to be attached to a printed circuit board (PCB). The thermal pad must be soldered directly to the PCB. After soldering, the PCB can be used as a heatsink. In addition, through the use of thermal vias, the thermal pad can be attached directly to the appropriate copper plane shown in the electrical schematic for the device, or alternatively, can be attached to a special heatsink structure designed into the PCB. This design optimizes the heat transfer from the integrated circuit (IC).

For additional information on the PowerPAD package and how to take advantage of its heat dissipating abilities, refer to Technical Brief, PowerPAD Thermally Enhanced Package, Texas Instruments Literature No. SLMA002 and Application Brief, PowerPAD Made Easy, Texas Instruments Literature No. SLMA004. Both documents are available at www.ti.com.

The exposed thermal pad dimensions for this package are shown in the following illustration.

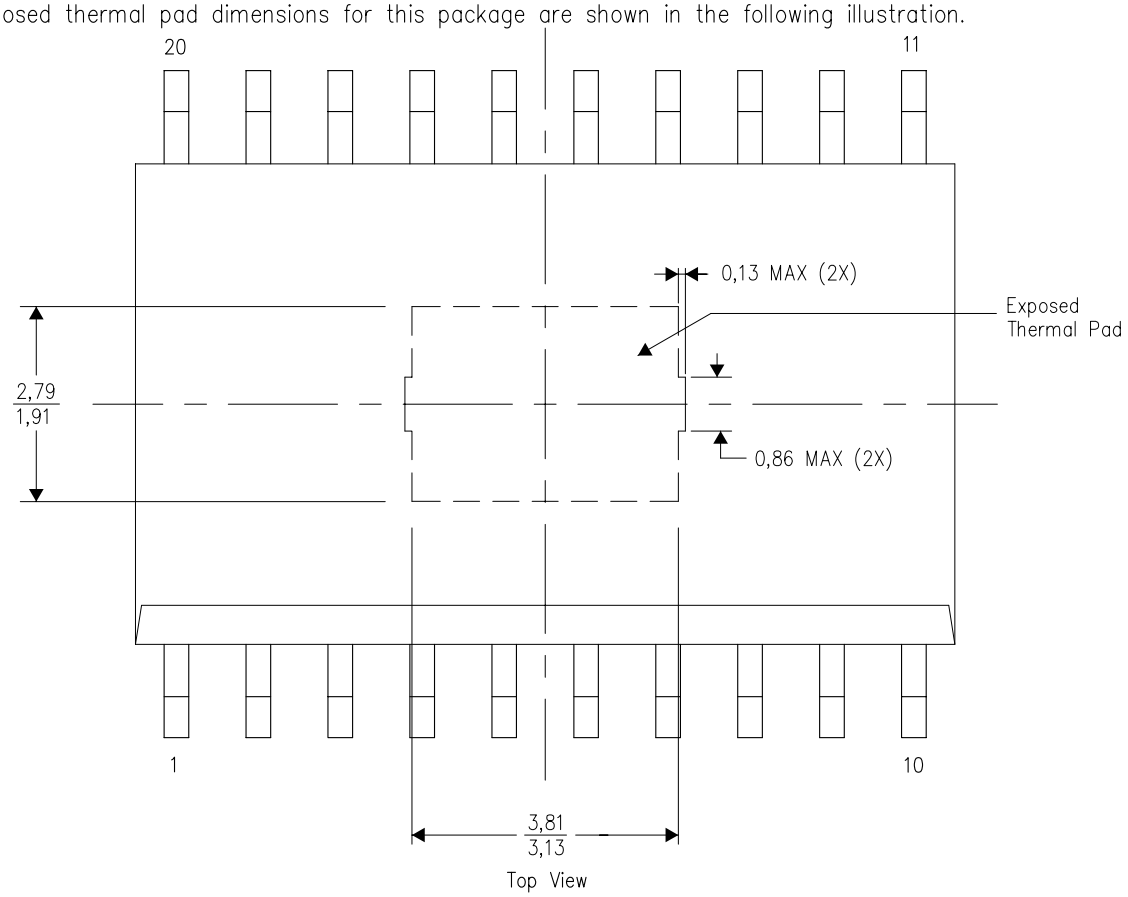

Exposed Thermal Pad Dimensions

4206325-4/E 12/10

NOTE: A. All linear dimensions are in millimeters

DWP (R-PDSO-G20) PowerPAD™ PLASTIC SMALL OUTLINE

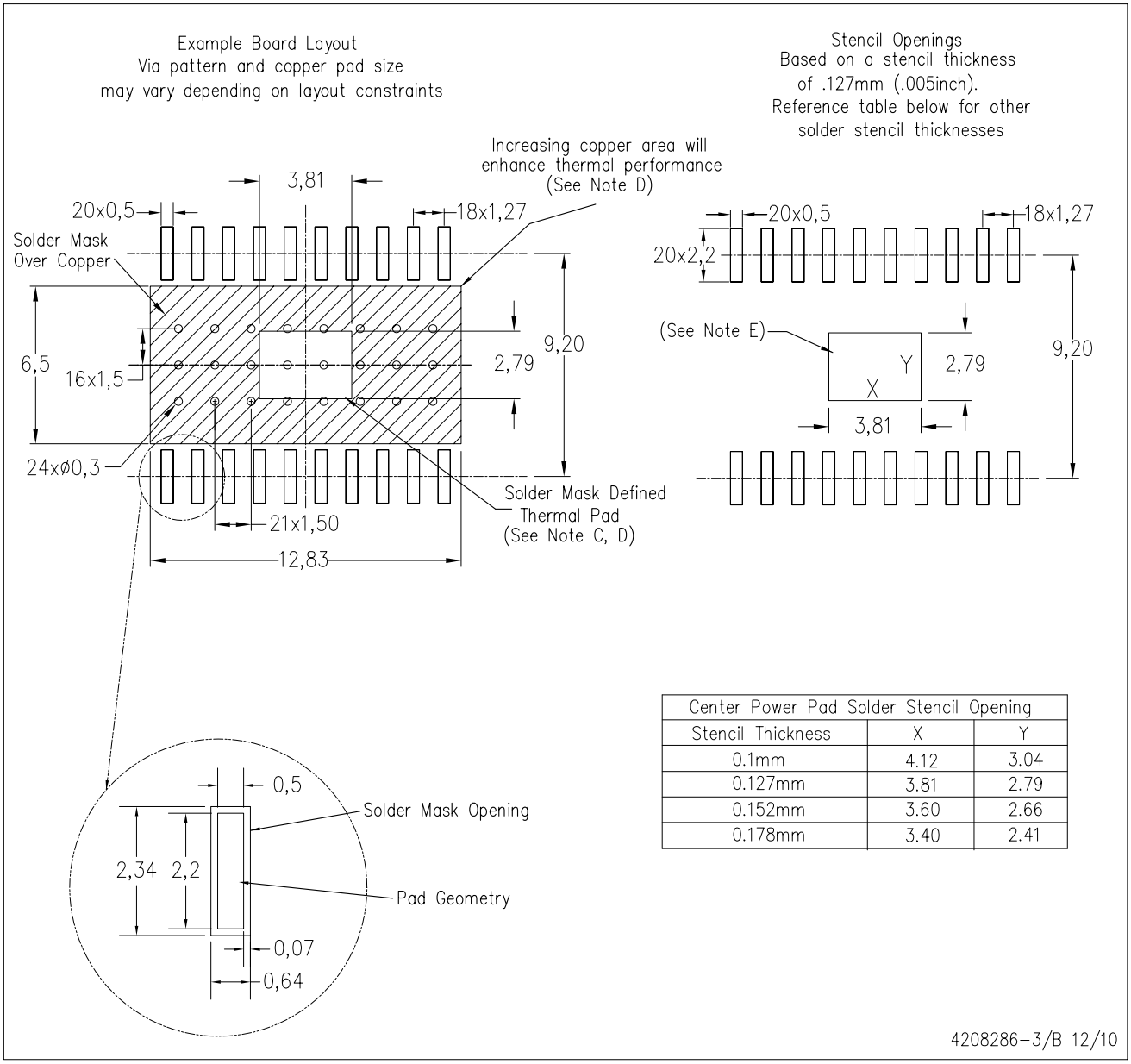

Center Power Pad Solder Stencil Opening		
Stencil Thickness	X	Y
0.1mm	4.12	3.04
0.127mm	3.81	2.79
0.152mm	3.60	2.66
0.178mm	3.40	2.41

NOTES:
- A. All linear dimensions are in millimeters.
- B. This drawing is subject to change without notice.
- C. Customers should place a note on the circuit board fabrication drawing not to alter the center solder mask defined pad.
- D. This package is designed to be soldered to a thermal pad on the board. Refer to Technical Brief, PowerPad Thermally Enhanced Package, Texas Instruments Literature No. SLMA002, SLMA004, and also the Product Data Sheets for specific thermal information, via requirements, and recommended board layout. These documents are available at www.ti.com <http://www.ti.com>. Publication IPC-7351 is recommended for alternate designs.
- E. Laser cutting apertures with trapezoidal walls and also rounding corners will offer better paste release. Customers should contact their board assembly site for stencil design recommendations. Example stencil design based on a 50% volumetric metal load solder paste.

PowerPAD is a trademark of Texas Instruments.

IMPORTANT NOTICE AND DISCLAIMER

TI PROVIDES TECHNICAL AND RELIABILITY DATA (INCLUDING DATASHEETS), DESIGN RESOURCES (INCLUDING REFERENCE DESIGNS), APPLICATION OR OTHER DESIGN ADVICE, WEB TOOLS, SAFETY INFORMATION, AND OTHER RESOURCES “AS IS” AND WITH ALL FAULTS, AND DISCLAIMS ALL WARRANTIES, EXPRESS AND IMPLIED, INCLUDING WITHOUT LIMITATION ANY IMPLIED WARRANTIES OF MERCHANTABILITY, FITNESS FOR A PARTICULAR PURPOSE OR NON-INFRINGEMENT OF THIRD PARTY INTELLECTUAL PROPERTY RIGHTS.

These resources are intended for skilled developers designing with TI products. You are solely responsible for (1) selecting the appropriate TI products for your application, (2) designing, validating and testing your application, and (3) ensuring your application meets applicable standards, and any other safety, security, or other requirements. These resources are subject to change without notice. TI grants you permission to use these resources only for development of an application that uses the TI products described in the resource. Other reproduction and display of these resources is prohibited. No license is granted to any other TI intellectual property right or to any third party intellectual property right. TI disclaims responsibility for, and you will fully indemnify TI and its representatives against, any claims, damages, costs, losses, and liabilities arising out of your use of these resources.

TI’s products are provided subject to TI’s Terms of Sale (www.ti.com/legal/termsofsale.html) or other applicable terms available either on ti.com or provided in conjunction with such TI products. TI’s provision of these resources does not expand or otherwise alter TI’s applicable warranties or warranty disclaimers for TI products.

Mailing Address: Texas Instruments, Post Office Box 655303, Dallas, Texas 75265
Copyright © 2019, Texas Instruments Incorporated

Looking for pricing, stock, or lifecycle information?

Click below to explore more details on WIN SOURCE:

- View THS6002CDWP on WIN SOURCE
- Texas Instruments Information

Optimize Your Supply Chain with WIN SOURCE Solutions

- Global Sourcing Solution
- Obsolete Management
- Cost Control Management
- Shortage Management
- Alternative Solution
- Excess Inventory Management