THE DATASHEET OF

TIBPAL20R6-25CFN

www.win-source.net 0086-755-83957316

SRPS022 – D2920, MAY 1987 – REVISED MARCH 1992

- **Low-Power, High-Performance**
  - **Reduced I_{CC} of 105 mA Max**
  - **f_{max}:**
    - **Without Feedback . . . 33 MHz Min**
    - **With Feedback . . . 25 MHz Min**
  - **t_{pd} . . . 25 ns Max**
- **Direct Replacement for PAL20L8A, PAL20R4A, PAL20R6A, PAL20L8A, with at Least 50% Reduction in Power**
- **Preload Capability on Output Registers Simplifies Testing**
- **Power-Up Clear on Registered Devices (All Register Outputs are Set Low, but Voltage Levels at the Output Pins Go High)**
- **Package Options Include Plastic Chip Carriers in Addition to Plastic and Ceramic DIPs**
- **Dependable Texas Instruments Quality and Reliability**

TIBPAL20L8'
JT OR NT PACKAGE
(TOP VIEW)

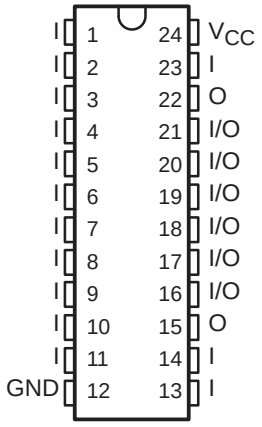

TIBPAL20L8'
FN PACKAGE
(TOP VIEW)

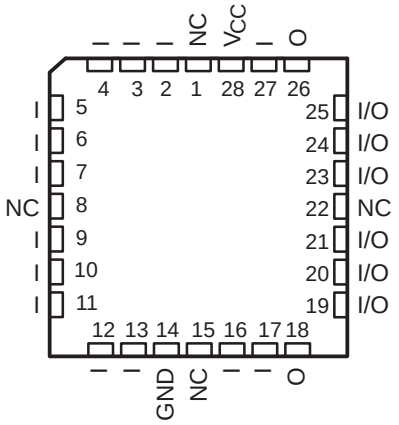

NC – No internal connection
Pin assignments in operating mode

DEVICE	I INPUTS	3-STATE O OUTPUTS	REGISTERED Q OUTPUTS	I/O PORTS
PAL20L8	14	2	0	6
PAL20R4	12	0	4 (3-state buffers)	4
PAL20R6	12	0	6 (3-state buffers)	2
PAL20R8	12	0	8 (3-state buffers)	0

description

These programmable array logic devices feature high speed and functional equivalency when compared with currently available devices. These IMPACT™ circuits combine the latest AdvancedLow-Power Schottky technology with proven titanium-tungsten fuses to provide reliable, high-performance substitutes for conventional TTL logic. Their easy programmability allows forquick design of custom functions and typically results in a more compact circuit board. In addition, chip carriers are available for futher reduction in board space.

All of the register outputs are set to a low level during power-up. Extra circuitry has been provided to allow loading of each register asynchronously to either a high or low state. This feature simplifies testing because the registers can be set to an initial state prior to executing the test sequence.

The TIBPAL20' C series is characterized from 0°C to 75°C.

These devices are covered by U.S. Patent 4,410,987
IMPACT is a trademark of Texas Instruments Incorporated.
PAL is a registered trademark of Advanced Micro Devices Inc.

PRODUCTION DATA information is current as of publication date. Products conform to specifications per the terms of Texas Instruments standard warranty. Production processing does not necessarily include testing of all parameters.

Copyright © 1992, Texas Instruments Incorporated

TIBPAL20R4'
JT OR NT PACKAGE
(TOP VIEW)

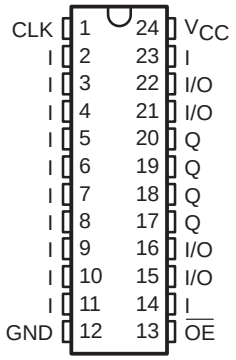

TIBPAL20R4'
FN PACKAGE
(TOP VIEW)

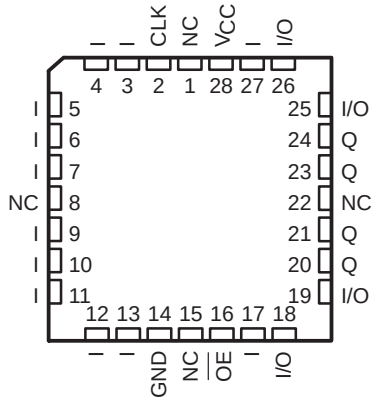

TIBPAL20R6'
JT OR NT PACKAGE
(TOP VIEW)

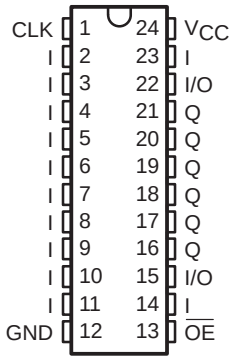

TIBPAL20R6'
FN PACKAGE
(TOP VIEW)

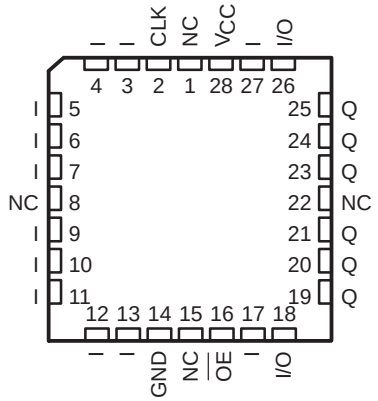

TIBPAL20R8'
JT OR NT PACKAGE
(TOP VIEW)

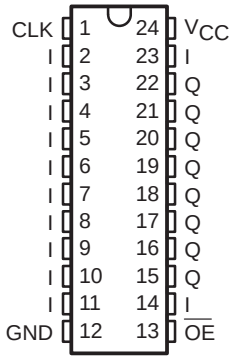

TIBPAL20R8'
FN PACKAGE
(TOP VIEW)

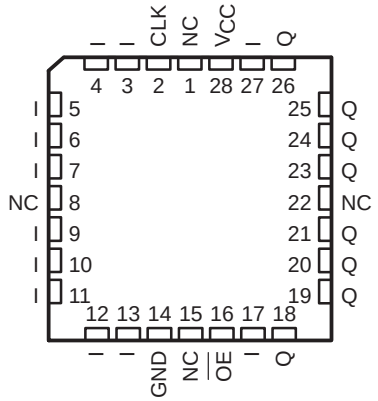

Pin assignments in operating mode

NC — No internal connection

functional block diagrams (positive logic)

TIBPAL20L8'

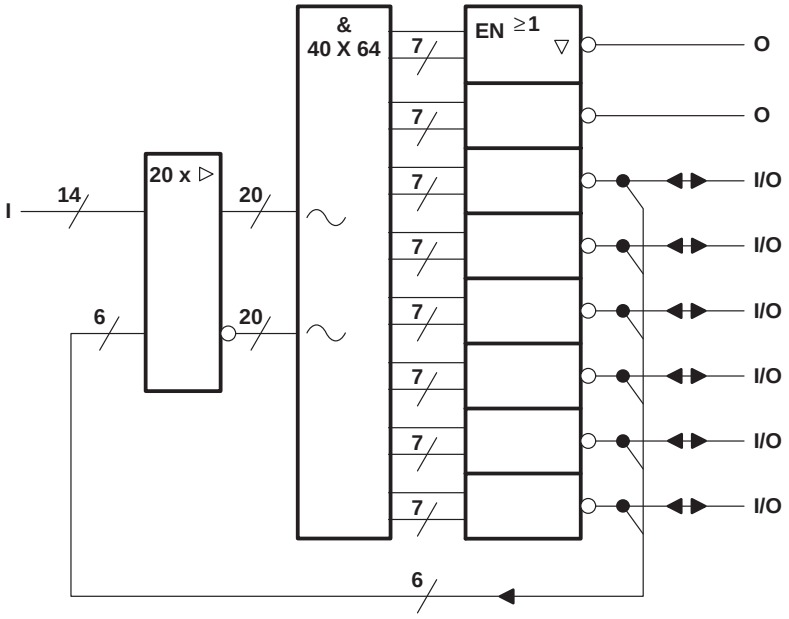

TIBPAL20R4'

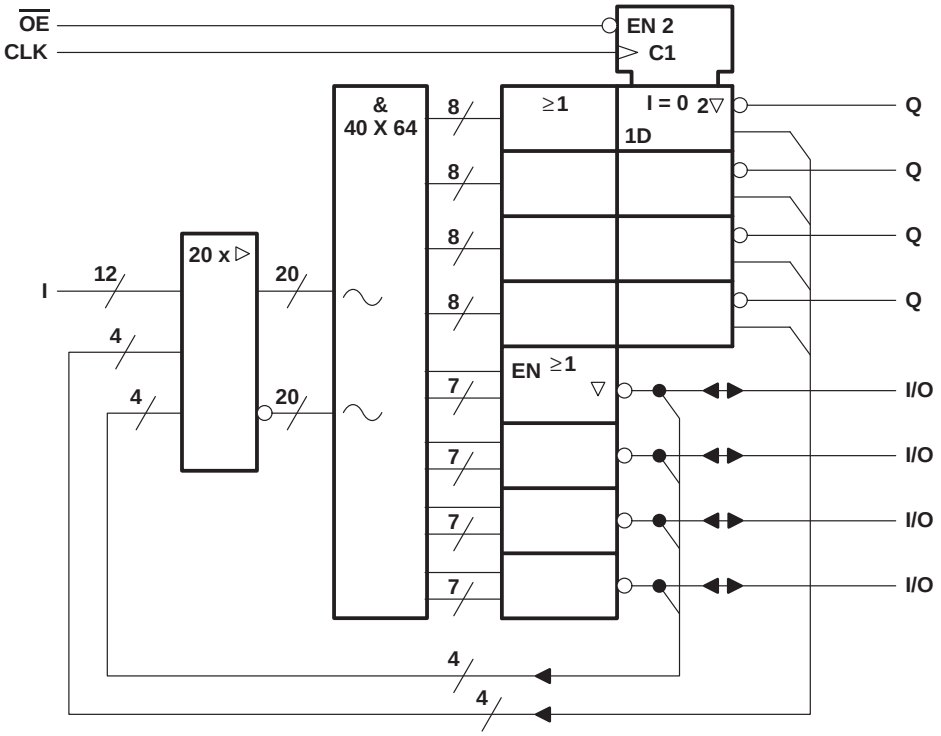

denotes fused inputs

functional block diagrams (positive logic)

TIBPAL20R6’

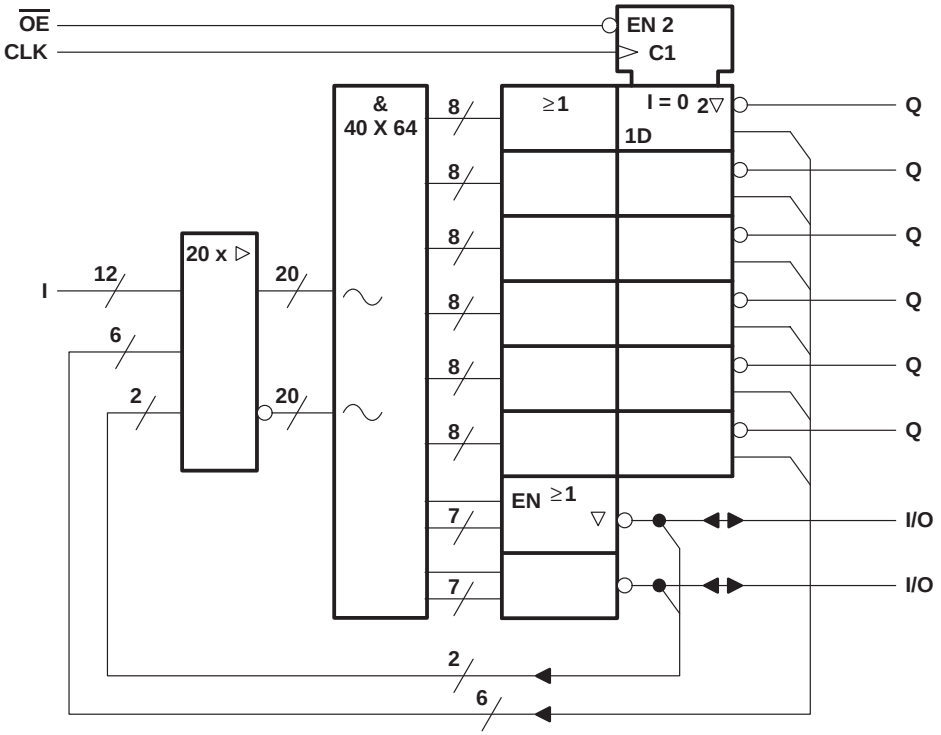

TIBPAL20R8’

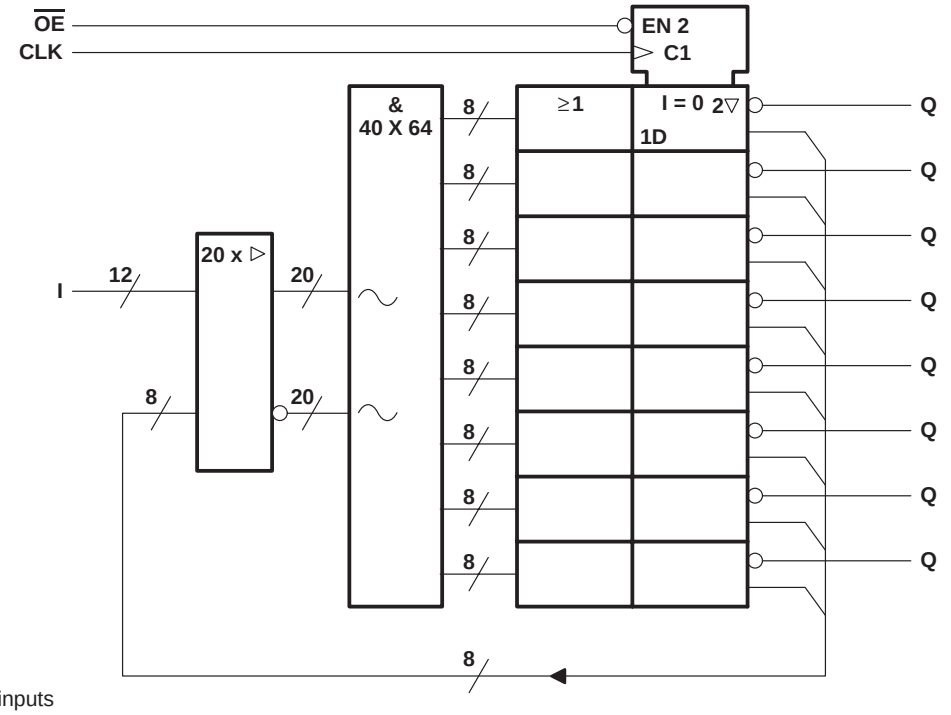

denotes fused inputs

logic diagram (positive logic)

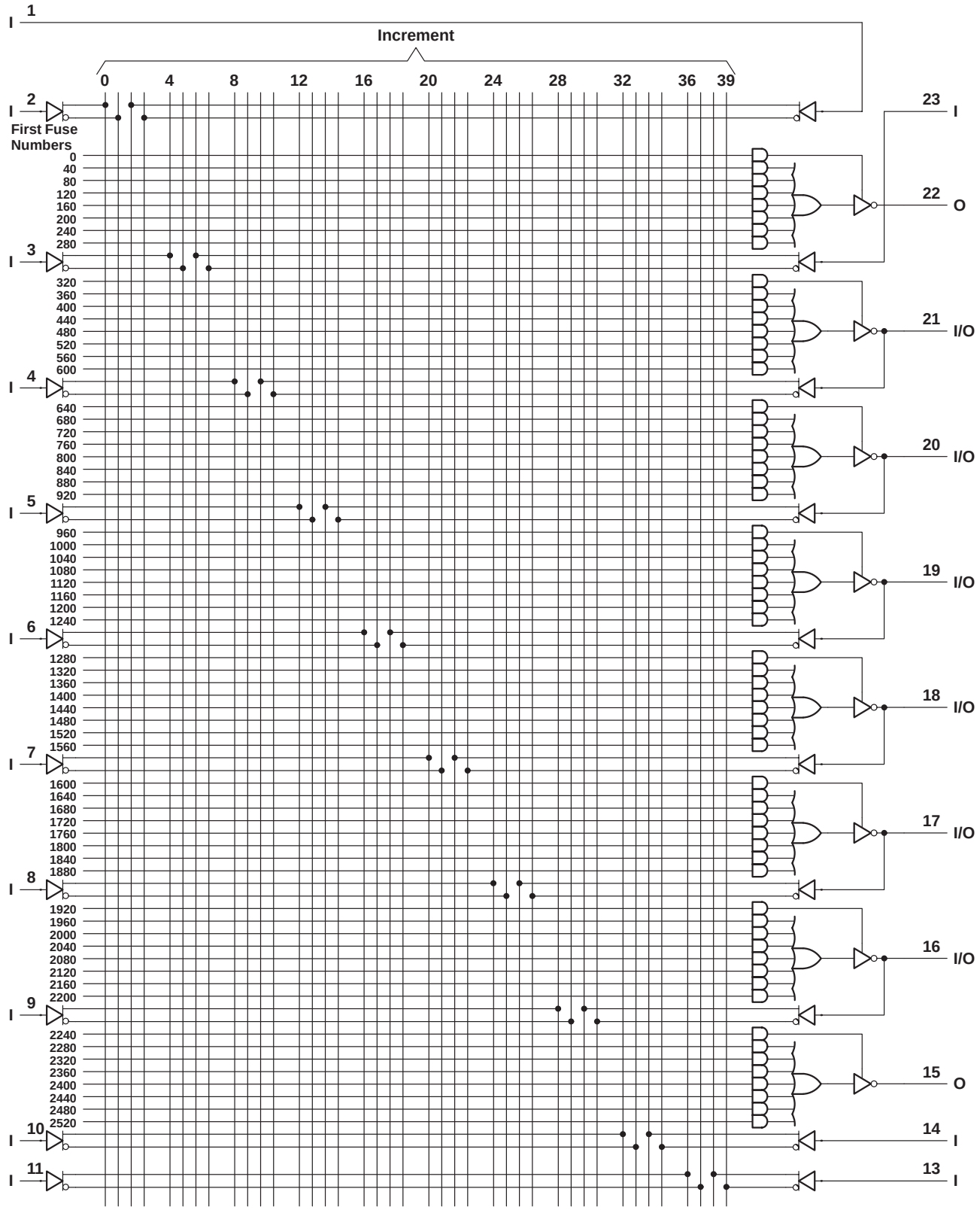

Fuse number = First fuse number + Increment
Pin numbers shown are for JT and NT packages.

logic diagram (positive logic)

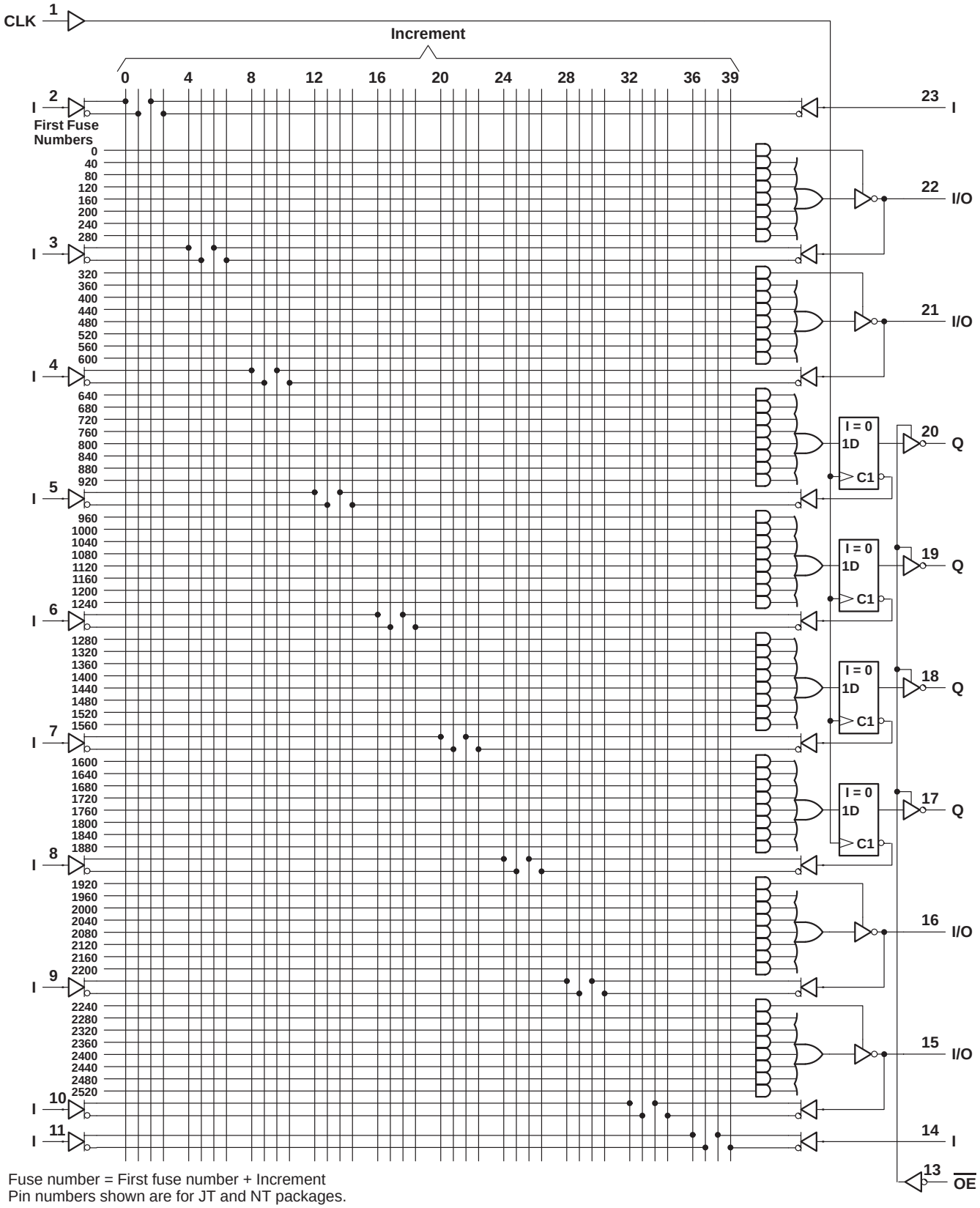

Fuse number = First fuse number + Increment
Pin numbers shown are for JT and NT packages.

logic diagram (positive logic)

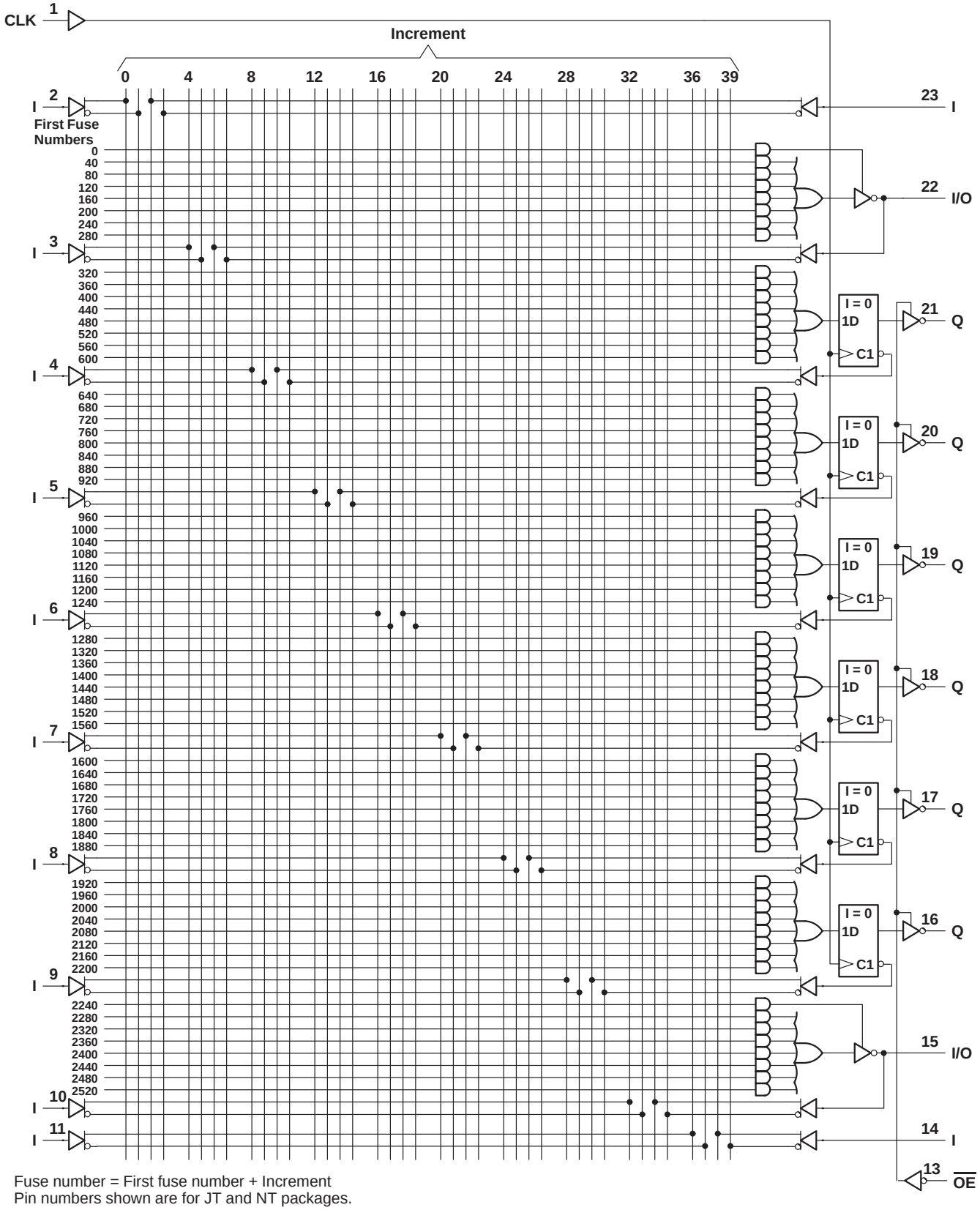

Fuse number = First fuse number + Increment
Pin numbers shown are for JT and NT packages.

logic diagram (positive logic)

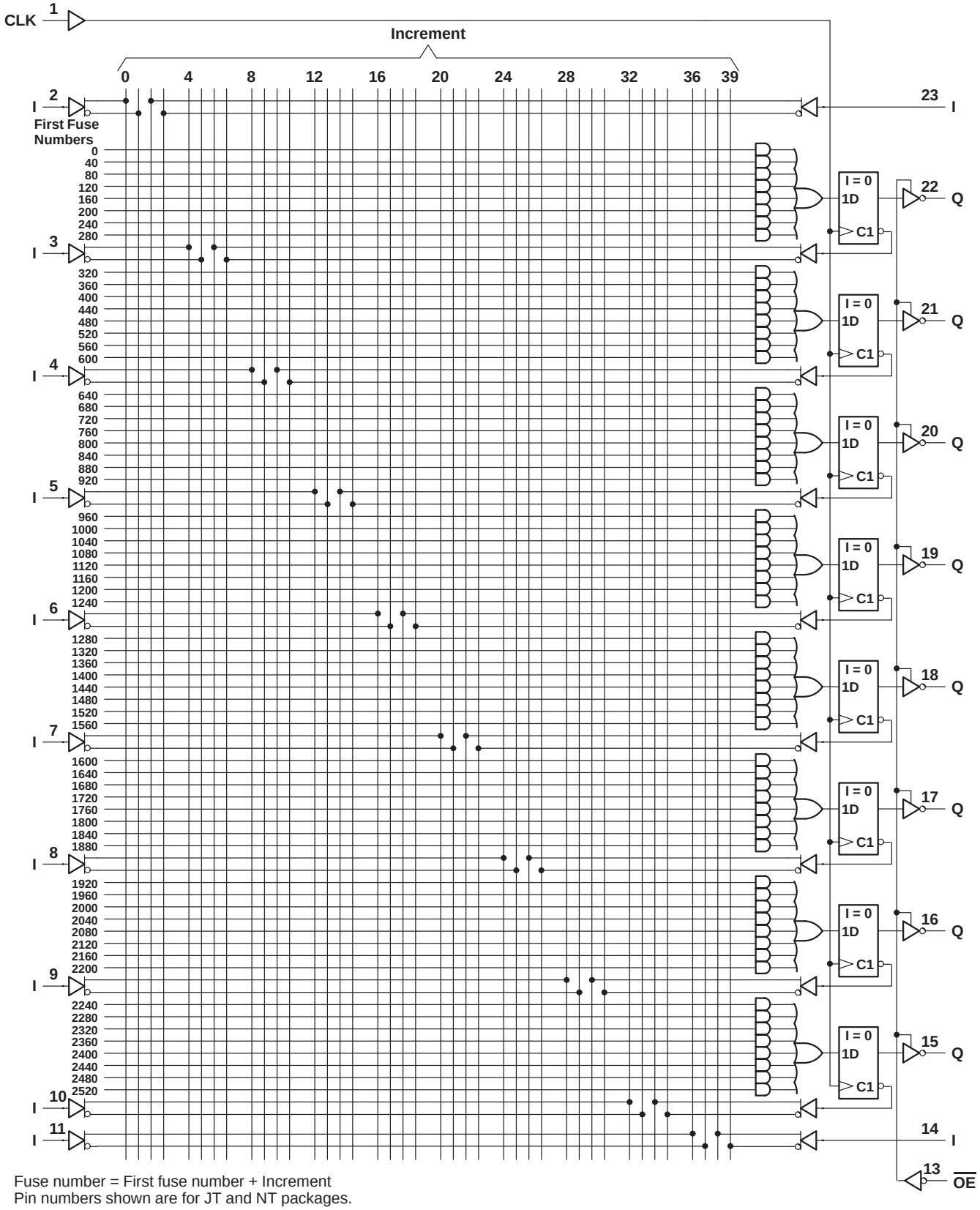

Fuse number = First fuse number + Increment
Pin numbers shown are for JT and NT packages.

absolute maximum ratings over operating free-air temperature range (unless otherwise noted)

Supply voltage, V_{CC} (see Note 1) . . . . . 7 V
Input voltage (see Note 1) . . . . . 5.5 V
Voltage applied to disabled output (see Note 1) . . . . . 5.5 V
Operating free-air temperature range . . . . . 0°C to 75°C
Storage temperature range . . . . . –65°C to 150°C

NOTE 1: These ratings apply except for programming pins during a programming cycle.

recommended operating conditions

			MIN	NOM	MAX	UNIT
V_{CC}	Supply voltage		4.75	5	5.25	V
V_{IH}	High-level input voltage		2		5.5	V
V_{IL}	Low-level input voltage				0.8	V
I_{OH}	High-level output current				–3.2	mA
I_{OL}	Low-level output current				24	mA
f_{clock}†	Clock frequency		0		33	MHz
t_w†	Pulse duration, clock	High	15			ns
		Low	15			
t_{su}†	Setup time, input or feedback before clock↑		25			ns
t_h†	Hold time, input or feedback after clock↑		0			ns
T_A	Operating free-air temperature		0	25	75	°C

† f_{clock}, t_w, t_{su}, and t_h do not apply for TIBPAL20L8'.

electrical characteristics over recommended operating free-air temperature range

PARAMETER		TEST CONDITIONS		MIN	TYP†	MAX	UNIT
V_{IK}		V_{CC} = 4.75 V,	I_I = –18 mA		–0.8	–1.5	V
V_{OH}		V_{CC} = 4.75 V,	I_{OH} = –3.2 mA	2.4	3.3		V
V_{OL}		V_{CC} = 4.75 V,	I_{OL} = 24 mA		0.3	0.5	V
I_{OZH}	O, Q outputs	V_{CC} = 5.25 V,	V_O = 2.7 V			20	µA
	I/O ports					100	
I_{OZL}	O, Q outputs	V_{CC} = 5.25 V,	V_O = 0.4 V			–20	µA
	I/O ports					–250	
I_I		V_{CC} = 5.25 V,	V_I = 5.5 V			0.1	mA
I_{IH}‡		V_{CC} = 5.25 V,	V_I = 2.7 V			20	µA
I_{IL}‡		V_{CC} = 5.25 V,	V_I = 0.4 V			–0.25	mA
I_{OS}§		V_{CC} = 5.25 V,	V_O = 0	–30	–70	–130	mA
I_{CC}		V_{CC} = 5.25 V, Outputs open,	V_I = 0, $\overline{OE}$ at V_{IH}		75	105	mA

switching characteristics over recommended ranges of supply voltage and operating free-air temperature (unless otherwise noted)

PARAMETER	FROM (INPUT)	TO (OUTPUT)	TEST CONDITION	MIN	TYP†	MAX	UNIT
f_{max}¶	With feedback		R1 = 200 Ω, R2 = 390 Ω, See Figure 3	25	40		MHz
	Without feedback			33	50		
t_{pd}	I, I/O	O, I/O		3	14	25	ns
t_{pd}	CLK↑	Q		2	10	15	ns
t_{en}	$\overline{OE}$	Q		2	8	15	ns
t_{dis}	$\overline{OE}$↑	Q		2	8	15	ns
t_{en}	I, I/O	O, I/O		3	15	25	ns
t_{dis}	I, I/O	O, I/O		3	15	25	ns

† All typical values are at V_{CC} = 5 V, T_A = 25°C.
‡ For I/O ports, the parameters I_{IH} and I_{IL} include the off-state output current.
§ Not more than one output should be shorted at a time, and the duration of the short-circuit should not exceed one second.
¶ $f_{max}(\text{with feedback}) = \frac{1}{t_{su} + t_{pd}\ (\text{CLK to Q})}$, $f_{max}(\text{without feedback}) = \frac{1}{t_w\ \text{high} + t_w\ \text{low}}$,
f_{max} does not apply for TIBPAL20L8,.

programming information

Texas Instruments programmable logic devices can be programmed using widely available software and inexpensive device programmers.

Complete programming specifications, algorithms, and the latest information on hardware, software, and firmware are available upon request. Information on programmers capable of programming Texas Instruments programmable logic is also available, upon request, from the nearest TI field sales office, local authorized TI distributor, or by calling Texas Instruments at (214) 997-5666.

preload procedure for registered outputs (see Figure 1 and Notes 2 and 3)

The output registers can be preloaded to any desired state during device testing. This permits any state to be tested without having to step through the entire state-machine sequence. Each register is preloaded individually by following the steps given below.

Step 1. With V_{CC} at 5 volts and Pin 1 at V_{IL}, raise Pin 13 to V_{IHH}.
Step 2. Apply either V_{IL} or V_{IH} to the output corresponding to the register to be preloaded.
Step 3. Pulse Pin 1, clocking in preload data.
Step 4. Remove output voltage, then lower Pin 13 to V_{IL}. Preload can be verified by observing the voltage level at the output pin.

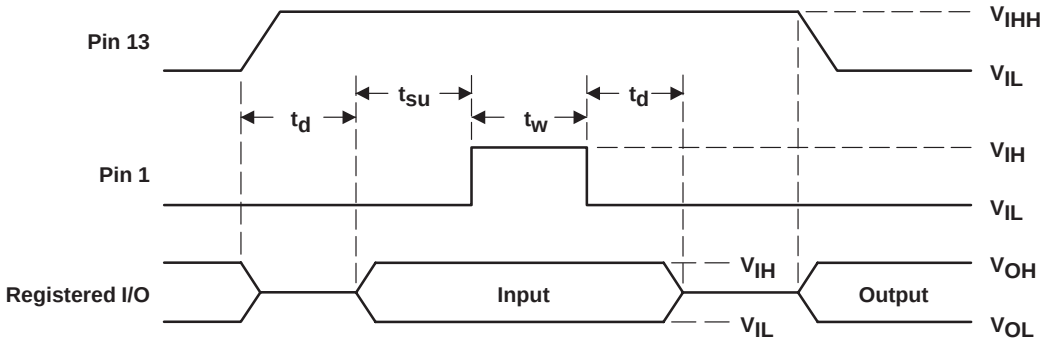

Figure 1. Preload Waveforms

NOTES: 2. Pin numbers shown are for JT and NT packages only. If chip carrier socket adapter is not used, pin numbers must be changed accordingly.
3. $t_d = t_{su} = t_h$ = 100 ns to 1000 ns V_{IHH} = 10.25 V to 10.75 v

power-up reset (see Figure 2)

Following power up, all registers are reset to zero. This feature provides extra flexibility to the system designer and is especially valuable in simplifying state-machine initialization. To ensure a valid power-up reset, it is important that the rise of V_{CC} be monotonic. Following power-up reset, a low-to-high clock transition must not occur until all applicable input and feedback setup times are met.

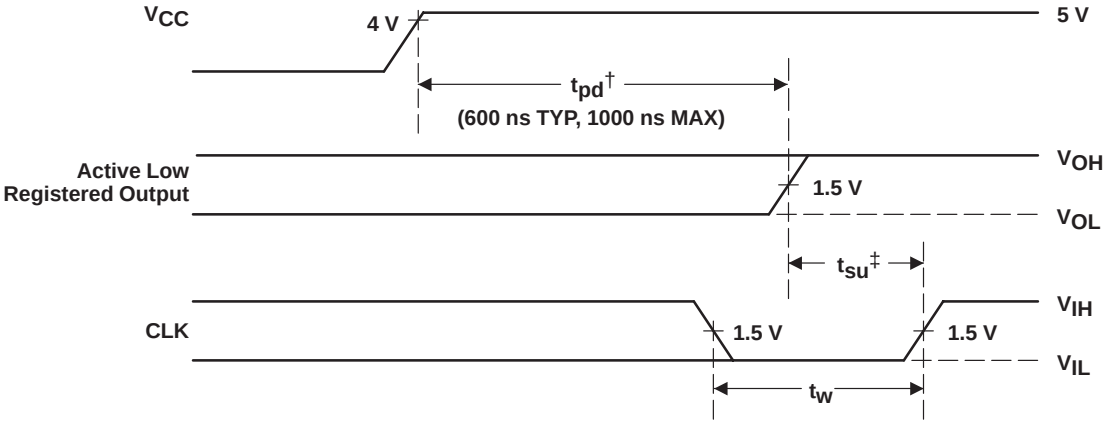

† This is the power-up reset time and applies to registered outputs only. The values shown are from characterization data.
‡ This is the setup time for input or feedback.

Figure 2. Power-Up Reset Waveforms

PARAMETER MEASUREMENT INFORMATION

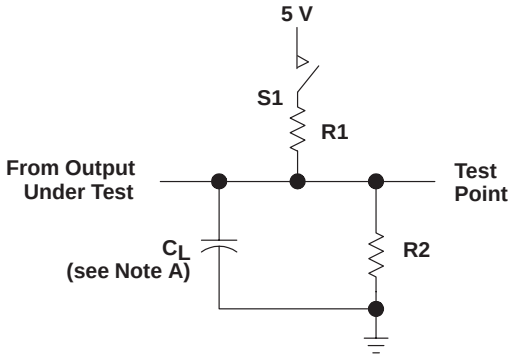

LOAD CIRCUIT FOR
3-STATE OUTPUTS

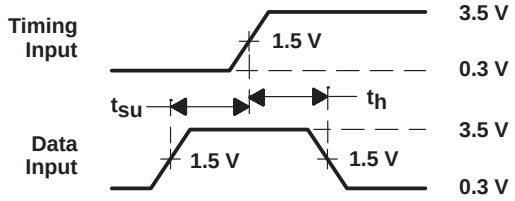

VOLTAGE WAVEFORMS
SETUP AND HOLD TIMES

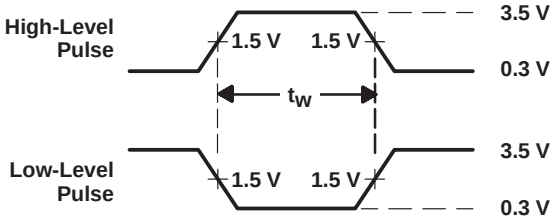

VOLTAGE WAVEFORMS
PULSE DURATIONS

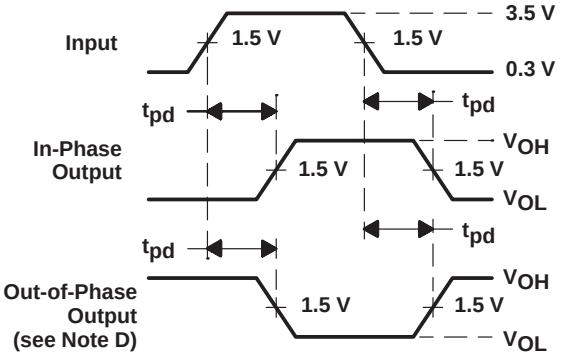

VOLTAGE WAVEFORMS
PROPAGATION DELAY TIMES

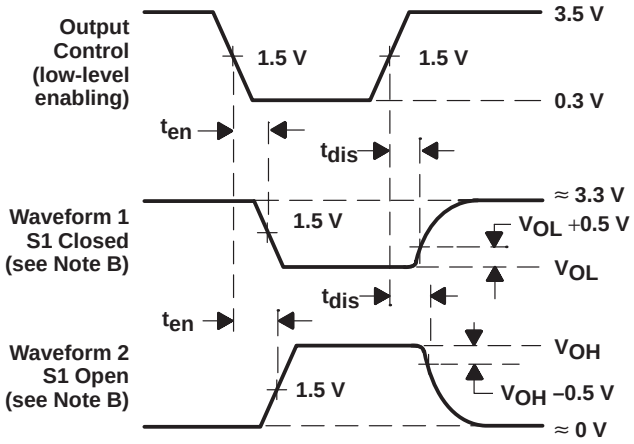

VOLTAGE WAVEFORMS
ENABLE AND DISABLE TIMES, 3-STATE OUTPUTS

NOTES: A. C_L includes probe and jig capacitance and is 50 pF for t_{pd} and t_{en}, 5 pF for t_{dis}.
B. Waveform 1 is for an output with internal conditions such that the output is low except when disabled by the output control. Waveform 2 is for an output with internal conditions such that the output is high except when disabled by the output control.
C. All input pulses have the following characteristics: PRR ≤ 1 MHz, t_r and t_f ≤ 2 ns, duty cycle = 50%.
D. When measuring propagation delay times of 3-state outputs, switch S1 is closed.
E. Equivalent loads may be used for testing.

Figure 3. Load Circuit and Voltage Waveforms

TI Worldwide Sales Offices

ALABAMA: Huntsville: 4960 Corporate Drive, Suite 150, Huntsville, AL 35805, (205) 837-7530.

ARIZONA: Phoenix: 8825 N. 23rd Avenue, Suite 100, Phoenix, AZ 85021, (602) 995-1007.

CALIFORNIA: Irvine: 1920 Main Street, Suite 900, Irvine, CA 92714, (714) 660-1200;
San Diego: 5625 Ruffin Road, Suite 100, San Diego, CA 92123, (619) 278-9600;
Santa Clara: 5353 Betsy Ross Drive, Santa Clara, CA 95054, (408) 980-9000;
Woodland Hills: 21550 Oxnard Street, Suite 700, Woodland Hills, CA 91367, (818) 704-8100.

COLORADO: Aurora: 1400 S. Potomac Street, Suite 101, Aurora, CO 80012, (303) 368-8000.

CONNECTICUT: Wallingford: 9 Barnes Industrial Park So., Wallingford, CT 06492, (203) 269-0074.

FLORIDA: Altamonte Springs: 370 S. North Lake Boulevard, Suite 1008, Altamonte Springs, FL 32701, (407) 260-2116;
Fort Lauderdale: 2950 N.W. 62nd Street, Suite 100, Fort Lauderdale, FL 33309, (305) 973-8502; **Tampa:** 4803 George Road, Suite 390, Tampa, FL 33634-6234, (813) 885-7588.

GEORGIA: Norcross: 5515 Spalding Drive, Norcross, GA 30092-2560, (404) 662-7967.

ILLINOIS: Arlington Heights: 515 West Algonquin, Arlington Heights, IL 60005, (708) 640-6925.

INDIANA: Carmel: 550 Congressional Drive, Suite 100, Carmel, IN 46032, (317) 573-6400;
Fort Wayne: 103 Airport North Office Park, Fort Wayne, IN 46825, (219) 489-4697.

KANSAS: Overland Park: 7300 College Boulevard, Lighton Plaza, Suite 150, Overland Park, KS 66210, (913) 451-4511.

MARYLAND: Columbia: 8815 Centre Park Drive, Suite 100, Columbia, MD 21045, (410) 964-2003.

MASSACHUSETTS: Waltham: Bay Colony Corporate Center 950 Winter Street, Suite 2800, Waltham, MA 02154, (617) 895-9100.

MICHIGAN: Farmington Hills: 33737 W. 12 Mile Road, Farmington Hills, MI 48018, (313) 553-1581.

MINNESOTA: Eden Prairie: 11000 W. 78th Street, Suite 100, Eden Prairie, MN 55344, (612) 828-9300.

MISSOURI: St. Louis: 12412 Powerscourt Drive, Suite 125, St. Louis, MO 63131, (314) 821-8400.

NEW JERSEY: Iselin: Metropolitan Corporate Plaza, 485 Bldg E. U.S. 1 South, Iselin, NJ 08830, (908) 750-1050.

NEW MEXICO: Albuquerque: 2709 J. Pan American Freeway, N.E., Albuquerque, NM 87101, (505) 345-2555.

NEW YORK: East Syracuse: 6365 Collamer Drive, East Syracuse, NY 13057, (315) 463-9291;
Fishkill: 300 Westage Business Center, Suite 140, Fishkill, NY 12524, (914) 897-2900;
Melville: 48 South Service Road, Suite 100, Melville, NY 11747, (516) 454-6601;
Pittsford: 2851 Clover Street, Pittsford, NY 14534, (716) 385-6770.

NORTH CAROLINA: Charlotte: 8 Woodlawn Green, Suite 100, Charlotte, NC 28217, (704) 527-0930;
Raleigh: 2809 Highwoods Boulevard, Suite 100, Raleigh, NC 27625, (919) 876-2725.

OHIO: Beachwood: 23775 Commerce Park Road, Beachwood, OH 44122-5875, (216) 765-7258;
Beavercreek: 4200 Colonel Glenn Highway, Suite 600, Beavercreek, OH 45431, (513) 427-6200.

OREGON: Beaverton: 6700 S.W. 105th Street, Suite 110, Beaverton, OR 97005, (503) 643-6758.

PENNSYLVANIA: Blue Bell: 670 Sentry Parkway, Suite 200, Blue Bell, PA 19422, (215) 825-9500.

PUERTO RICO: Hato Rey: 615 Mercantile Plaza Building, Suite 505, Hato Rey, PR 00919, (809) 753-8700.

TEXAS: Austin: 12501 Research Boulevard, Austin, TX 78759, (512) 250-6769;
Dallas: 7839 Churchill Way, Dallas, TX 75251, (214) 917-1264;
Houston: 9301 Southwest Freeway, Commerce Park, Suite 360, Houston, TX 77074, (713) 778-6592;
Midland: FM 1788 & I-20, Midland, TX 79711-0448, (915) 561-7137.

UTAH: Salt Lake City: 2180 South 1300 East, Sute 335, Salt Lake City, UT 54106, (801) 466-8972.

WISCONSIN: Waukesha: 20825 Swenson Drive, Suite 900, Waukesha WI 53186, (414) 798-1001.

CANADA: Nepean: 301 Moodie Drive, Suite 102, Mallom Center, Nepean, Ontario, Canada K2H 9C4, (613) 726-1970;
Richmond Hill: 280 Centre Street East, Richmond Hill, Ontario, Canada L4C 1B1, (416) 884-9181;
St. Laurent: 9460 Trans Canada Highway, St. Laurent, Quebec, Canada H4S 1R7, (514) 335-8392.

AUSTRALIA (& NEW ZEALAND): Texas Instruments Australia Ltd., 6-10 Talavera Road, North Ryde (Sydney), New South Wales, Australia 2113, 2-878-9000; 14th Floor, 380 Street, Kilda Road, Melbourne, Victoria, Australia 3004, 3-696-1211; 171 Philip Highway, Elizabeth, South Australia 5112, 8 255-2066.

BELGIUM: Texas Instruments Belgium S.A./N.V., Avenue Jules Bordetlaan 11, 1140 Brussels, Belgium, (02) 242 30 80.

BRAZIL: Texas Instruments Electronicos do Brasil Ltda., Av. Eng. Luiz Carlos Berrini 1461-11o andar, 04571, Sao Paulo, SP, Brazil, 11-535–5133.

DENMARK: Texas Instruments A/S, Borupvang 2D, 2750 Ballerup, Denmark, (44) 68 74 00.

FINLAND: Texas Instruments OY, Ahertajantle 3, P.O. Box 86, 02321 Espoo, Finland, (0) 802 6517.

FRANCE: Texas Instruments France, 8-10 Avenue Morane-Saulnier, B.P. 67, 78141 Velizy Villacoublay Cedex, France, (1) 30 70 1003.

GERMANY: Texas Instruments Deutschland GmbH., Haggertystrasse 1, 8050 Freising, (08161) 80-0; Kurfurstendamm 195-196, 1000 Berlin 15, (030) 8 82 73 65; Dusseldorfer Strasse 40, 6236 Eschborn 1, (06196) 80 70; Kirchhorster Strasse 2, 3000 Hannover 51, (0511) 64 68-0; Maybachstrasse II, 7302 Ostfildern 2 (Nellingen), (0711) 3403257; Gildehofcenter, Hollestrasses 3, 4300 Essen 1, (0201) 24 25-0.

HOLLAND: Texas Instruments Holland B.V., Hogehilweg 19, Postbus 12995, 1100 AZ Amsterdam-Zuidoost, Holland, (020) 5602911.

HONG KONG: Texas Instruments Hong Kong Ltd., 8th Floor, World Shipping Center, 7 Canton Road, Kowloon, Hong Kong, 737-0338.

HUNGARY: Texas Instruments Representation, Budaorsi ut.42, 1112 Budapest, Hungary, (1) 1 66 66 17.

IRELAND: Texas Instruments Ireland Ltd., 7/8 Harcourt Street, Dublin 2, Ireland, (01) 755233.

ITALY: Texas Instruments Italia S.p.A., Centro Direzionale Colleoni, Palazzo Perseo-Via Paracelso 12, 20041 Agrate Brianza (Mi), Italy, (039) 63221; Via Castello della Magliana, 38, 00148 Roma, Italy (06) 6572651; Via Amendola, 17, 40100 Bologna, Italy (051) 554004.

JAPAN: Texas Instruments Japan Ltd., Aoyama Fuji Building 3-6-12 Kita-Aoyama Minato-ku, Tokyo, Japan 107, 03-498-2111; MS Shibaura Building 9F, 4-13-23 Shibaura, Minato-ku, Tokyo, Japan 108, 03-769-8700; Nissho-iwai Building 5F, 2-5-8 Imabashi, Chuou-ku, Osaka, Japan 541, 06-204-1881; Dai-ni Toyota Building Nishi-kan 7F, 4-10-27 Meieki, Nakamura-ku, Nagoya, Japan 450, 052-583-8691; Kanazawa Oyama-cho Daiichi Seimei Building 6F, 3-10 Oyama-cho, Kanazawa, Ishikawa, Japan 920, 0762-23-5471; Matsumoto Showa Building 6F, 1-2-11 Fukashi, Matsumoto, Nagano, Japan 390, 0263-33-1060; Daiichi Olympic Tachikawa Building 6F, 1-25-12, Akebono-cho, Tachikawa, Tokyo, Japan 190, 0425-27-6760; Yokohama Business Park East Tower 10F, 134 Goudo-cho Hodogaya-ku, Yokohama-shi, Kanagawa, Japan 240, 045-338-1220; Nihon Seimei Kyoto Yasaka Building 5F, 843-2, Higashi Shiokohji-cho, Higashi-iru, Nishinotoh-in, Shiokohji-dori, Shimogyo-ku, Kyoto, Japan 600, 075-341-7713; Sumitomo Seimei Kumagaya Building 8F, 2-44 Yayoi, Kumagaya, Saitama, Japan 360, 0485-22-2440; 2597-1, Aza Harudai, Oaza Yasaka, Kitsuki, Oita, Japan 873, 09786-3-3211.

KOREA: Texas Instruments Korea Ltd., 28th Floor, Trade Tower, 159, Samsung-Dong, Kangnam-ku Seoul, Korea, 2 551-2800.

MALAYSIA: Texas Instruments Malaysia, Sdn. Bhd., Asia Pacific, Lot 36.1 #Box 93, Menara Maybank, 100 Jalan Tun Perak, 50050 Kuala Llumpur, Malaysia, 2306001.

MEXICO: Texas Instruments de Mexico S.A., de C.V., Alfonso Reyes 115, Col. Hipodromo Condesa, Mexico, D.F., Mexico 06170, 5-515-6081.

NORWAY: Texas Instruments Norge A/S, P.B. 106, Refstad (Sinsenveien 53), 0513 Oslo 5, Norway, (02) 155 090.

PEOPLE'S REPUBLIC OF CHINA: Texas Instruments China Inc., Beijing Representative Office, 7-05 CITIC Building, 19 Jianguomenwai Dajie, Beijing, China, 500-2255, Ext. 3750.

PHILIPPINES: Texas Instruments Asia Ltd., Philippines Branch, 14th Floor, Ba-Lepanto Building, Paseo de Roxas, Makati, Metro Manila, Philippines, 2-8176031.

PORTUGAL: Texas Instruments Equipamento Electronico (Portugal) Ltda., Ing. Frederico Ulricho, 2650 Moreira Da Maia, 4470 Maia, Portugal (2) 948 1003.

SINGAPORE (& INDIA, INDONESIA, MALAYSIA, THAILAND): Texas Instruments Singapore (PTE) Ltd., Asia Pacific, 101 Thomson Road, #23-01, United Square, Singapore 1130, 3508100.

SPAIN: Texas Instruments Espana S.A., c/Gobelas 43, Urbanizasion, La Florida, 28023, Madrid, Spain, (1) 372 8051; c/Diputacion, 279-3-5, 08007 Barcelona, Spain, (3) 317 91 80.

SWEDEN: Texas Instruments International Trade Corporation (Sverigefilialen), Isafjordsgaton, Box 30, S-164 93 Kista, Sweden, (08) 752 58 00.

SWITZERLAND: Texas Instruments Switzerland AG, Riedstrasse 6, C8953 Dietikon, Switzerland, (01) 744 2811.

TAIWAN: Texas Instruments Taiwan Limited, Taipei Branch, 10th Floor Bank Tower, 205 Tung Hwa N. Road, Taipei, Taiwan, 10592 Republic of China, 2-7139311.

TURKEY: Texas Instruments, DSEG MidEast Regional Marketing Office, Karum Center, Suite 442, Iran Caddesi 21, 06680 Kavakllldere, Ankara, Turkey, 4-468-0155.

UNITED KINGDOM: Texas Instruments Ltd., Manton Lane, Bedford, England, MK41 7PA, (0234) 270 111.

TI Authorized North American Distributors

Alliance Electronics, Inc. (military product only)
Almac/Arrow
Anthem Electronics
Arrow/Schweber
Future Electronics (Canada)
GRS Electronics Co., Inc. *
Hall-Mark Electronics
Marshall Industries
Newark Electronics *
Wyle Laboratories
Zeus Components
Rochester Electronics, Inc. (obsolete product only)

*Not authorized for TI military products

TEXAS INSTRUMENTS

B0892

©1992 Texas Instruments Incorporated

TI North American Sales Offices

ALABAMA: Huntsville: (205) 837-7530
ARIZONA: Phoenix: (602) 995-1007
CALIFORNIA: Irvine: (714) 660-1200
San Diego: (619) 278-9600
Santa Clara: (408) 980-9000
Woodland Hills: (818) 704-8100
COLORADO: Aurora: (303) 368-8000
CONNECTICUT: Wallingford: (203) 269-0074
FLORIDA: Altamonte Springs: (407) 260-2116
Fort Lauderdale: (305) 973-8502
Tampa: (813) 885-7588
GEORGIA: Norcross: (404) 662-7967
ILLINOIS: Arlington Heights: (708) 640-3000
INDIANA: Carmel: (317) 573-6400
Fort Wayne: (219) 489-4697
KANSAS: Overland Park: (913) 451-4511
MARYLAND: Columbia: (410) 964-2003
MASSACHUSETTS: Waltham: (617) 895-9100
MICHIGAN: Farmington Hills: (313) 553-1581
MINNESOTA: Eden Prairie: (612) 828-9300
MISSOURI: St. Louis: (314) 821-8400
NEW JERSEY: Iselin: (908) 750-1050
NEW MEXICO: Albuquerque: (505) 345-2555
NEW YORK: East Syracuse: (315) 463-9291
Fishkill: (914) 897-2900
Melville: (516) 454-6600
Pittsford: (716) 385-6770
NORTH CAROLINA: Charlotte: (704) 527-0930
Raleigh: (919) 876-2725
OHIO: Beachwood: (216) 765-7258
Beavercreek: (513) 427-6200
OREGON: Beaverton: (503) 643-6758
PENNSYLVANIA: Blue Bell: (215) 825-9500
PUERTO RICO: Hato Rey: (809) 753-8700
TEXAS: Austin: (512) 250-6769
Dallas: (214) 917-1264
Houston: (713) 778-6592
Midland: (915) 561-7137
UTAH: Salt Lake City: (801) 466-8972
WISCONSIN: Waukesha: (414) 798-1001
CANADA: Nepean: (613) 726-1970
Richmond Hill: (416) 884-9181
St. Laurent: (514) 335-8392

TI Regional Technology Centers

CALIFORNIA: Irvine: (714) 660-8140
Santa Clara: (408) 748-2222
GEORGIA: Norcross: (404) 662-7945
ILLINOIS: Arlington Heights: (708) 640-2909
INDIANA: Indianapolis: (317) 573-6400
MASSACHUSETTS: Waltham: (617) 895-9196
MEXICO: Mexico City: 491-70834
MINNESOTA: Minneapolis: (612) 828-9300
TEXAS: Dallas: (214) 917-3881
CANADA: Nepean: (613) 726-1970

Customer Response Center

TOLL FREE: (800) 336-5236
OUTSIDE USA: (214) 995-6611
(8:00 a.m. – 5:00 p.m. CST)

TI Authorized North American Distributors

Alliance Electronics, Inc. (military product only)
Almac/Arrow
Anthem Electronics
Arrow/Schweber
Future Electronics (Canada)
GRS Electronics Co., Inc.
Hall-Mark Electronics
Marshall Industries
Newark Electronics
Rochester Electronics, Inc.
(obsolete product only (508) 462-9332)
Wyle Laboratories
Zeus Components

TI Distributors

ALABAMA: Arrow/Schweber (205) 837-6955; Hall-Mark (205) 837-8700; Marshall (205) 881-9235.

ARIZONA: Anthem (602) 966-6600; Arrow/Schweber (602) 437-0750; Hall-Mark (602) 431-0030; Marshall (602) 496-0290; Wyle (602) 437-2088.

CALIFORNIA: Los Angeles/Orange County: Anthem (818) 775-1333, (714) 768-4444; Arrow/Schweber (818) 380-9686, (714) 838-5422; Hall-Mark (818) 773-4500, (714) 727-6000; Marshall (818) 878-7000, (714) 458-5301; Wyle (818) 880-9000, (714) 863-9953; Zeus (714) 921-9000, (818) 889-3838;

Sacramento: Anthem (916) 624-9744; Hall-Mark (916) 624-9781; Marshall (916) 635-9700; Wyle (916) 638-5282;

San Diego: Anthem (619) 453-9005; Arrow/Schweber (619) 565-4800; Hall-Mark (619) 268-1201; Marshall (619) 578-9600; Wyle (619) 565-9171; Zeus (619) 277-9681.

San Francisco Bay Area: Anthem (408) 453-1200; Arrow/Schweber (408) 441-9700, (510) 490-9477; Hall-Mark (408) 432-4000; Marshall (408) 942-4600; Wyle (408) 727-2500; Zeus (408) 629-4789.

COLORADO: Anthem (303) 790-4500; Arrow/Schweber (303) 799-0258; Hall-Mark (303) 790-1662; Marshall (303) 451-8383; Wyle (303) 457-9953.

CONNECTICUT: Anthem (203) 575-1575; Arrow/Schweber (203) 265-7741; Hall-Mark (203) 271-2844; Marshall (203) 265-3822.

FLORIDA: Fort Lauderdale: Arrow/Schweber (305) 429-8200; Halll-Mark (305) 971-9280; Marshall (305) 977-4880.

Orlando: Arrow/Schweber (407) 333-9300; Hall-Mark (407) 830-5855; Marshall (407) 767-8585; Zeus (407) 788-9100.

Tampa: Hall-Mark (813) 541-7440; Marshall (813) 573-1399.

GEORGIA: Arrow/Schweber (404) 497-1300; Hall-Mark (404) 623-4400; Marshall (404) 923-5750.

ILLINOIS: Anthem (708) 884-0200; Arrow/Schweber (708) 250-0500; Hall-Mark (312) 860-3800; Marshall (708) 490-0155; Newark (312)784-5100.

INDIANA: Arrow/Schweber (317) 299-2071; Hall-Mark (317) 872-8875; Marshall (317) 297-0483.

IOWA: Arrow/Schweber (319) 395-7230.

KANSAS: Arrow/Schweber (913) 541-9542; Hall-Mark (913) 888-4747; Marshall (913) 492-3121.

MARYLAND: Anthem (301) 995-6640; Arrow/Schweber (301) 596-7800; Hall-Mark (301) 988-9800; Marshall (301) 622-1118; Zeus (301) 997-1118.

MASSACHUSETTS: Anthem (508) 657-5170; Arrow/Schweber (508) 658-0900; Hall-Mark (508) 667-0902; Marshall (508) 658-0810; Wyle (617) 272-7300; Zeus (617) 246-8200.

MICHIGAN: Detroit: Arrow/Schweber (313) 462-2290; Hall-Mark (313) 416-5800; Marshall (313) 525-5850; Newark (313) 967-0600.

MINNESOTA: Anthem (612) 944-5454; Arrow/Schweber (612) 941-5280; Hall-Mark (612) 881-2600; Marshall (612) 559-2211.

MISSOURI: Arrow/Schweber (314) 567-6888; Hall-Mark (314) 291-5350; Marshall (314) 291-4650.

NEW JERSEY: Anthem (201) 227-7960; Arrow/Schweber (201) 227-7880, (609) 596-8000; Hall-Mark (201) 515-3000, (609) 235-1900; Marshall (201) 882-0320, (609) 234-9100.

NEW MEXICO: Alliance (505) 292-3360.

NEW YORK: Long Island: Anthem (516) 864-6600; Arrow/Schweber (516) 231-1000; Hall-Mark (516) 737-0600; Marshall (516) 273-2424; Zeus (914) 937-7400.

Rochester: Arrow/Schweber (716) 427-0300; Hall-Mark (716) 425-3300; Marshall (716) 235-7620.

Syracuse: Marshall (607) 785-2345.

NORTH CAROLINA: Arrow/Schweber (919) 876-3132; Hall-Mark (919) 872-0712; Marshall (919) 878-9882.

OHIO: Cleveland: Arrow/Schweber (216) 248-3990; Hall-Mark (216) 349-4632; Marshall (216) 248-1788.

Columbus: Hall-Mark (614) 888-3313**.**

Dayton: Arrow/Schweber (513) 435-5563; Marshall (513) 898-4480; Zeus (513) 293-6162.

OKLAHOMA: Arrow/Schweber (918) 252-7537; Hall-Mark (918) 254-6110.

OREGON: Almac/Arrow (503) 629-8090; Anthem (503) 643-1114; Marshall (503) 644-5050; Wyle (503) 643-7900.

PENNSYLVANIA: Anthem (215) 443-5150; Arrow/Schweber (215) 928-1800; GRS (215) 922-7037; (609) 964-8560; Marshall (412) 788-0441.

TEXAS: Austin: Arrow/Schweber (512) 835-4180; Hall-Mark (512) 258-8848; Marshall (512) 837-1991; Wyle (512) 345-8853;

Dallas: Anthem (214) 238-7100; Arrow/Schweber (214) 380-6464; Hall-Mark (214) 553-4300; Marshall (214) 233-5200; Wyle (214) 235-9953; Zeus (214) 783-7010;

Houston: Arrow/Schweber (713) 530-4700; Hall-Mark (713) 781-6100; Marshall (713) 467-1666; Wyle (713) 879-9953.

UTAH: Anthem (801) 973-8555; Arrow/Schweber (801) 973-6913; Marshall (801) 973-2288; Wyle (801) 974-9953.

WASHINGTON: Almac/Arrow (206) 643-9992, Anthem (206) 483-1700; Marshall (206) 486-5747; Wyle (206) 881-1150.

WISCONSIN: Arrow/Schweber (414) 792-0150; Hall-Mark (414) 797-7844; Marshall (414) 797-8400.

CANADA: Calgary: Future (403) 235-5325;

Edmonton: Future (403) 438-2858;

Montreal: Arrow/Schweber (514) 421-7411; Future (514) 694-7710; Marshall (514) 694-8142

Ottawa: Arrow/Schweber (613) 226-6903; Future (613) 820-8313.

Quebec: Future (418) 897-6666.

Toronto: Arrow/Schweber (416) 670-7769; Future (416) 612-9200; Marshall (416) 458-8046.

Vancouver: Arrow/Schweber (604) 421-2333; Future (604) 294-1166.

TI Die Processors

Chip Supply	(407) 298-7100
Elmo Semiconductor	(818) 768-7400
Minco Technology Labs	(512) 834-2022

TEXAS INSTRUMENTS

D0892

©1992 Texas Instruments Incorporated

IMPORTANT NOTICE

Texas Instruments and its subsidiaries (TI) reserve the right to make changes to their products or to discontinue any product or service without notice, and advise customers to obtain the latest version of relevant information to verify, before placing orders, that information being relied on is current and complete. All products are sold subject to the terms and conditions of sale supplied at the time of order acknowledgement, including those pertaining to warranty, patent infringement, and limitation of liability.

TI warrants performance of its semiconductor products to the specifications applicable at the time of sale in accordance with TI's standard warranty. Testing and other quality control techniques are utilized to the extent TI deems necessary to support this warranty. Specific testing of all parameters of each device is not necessarily performed, except those mandated by government requirements.

CERTAIN APPLICATIONS USING SEMICONDUCTOR PRODUCTS MAY INVOLVE POTENTIAL RISKS OF DEATH, PERSONAL INJURY, OR SEVERE PROPERTY OR ENVIRONMENTAL DAMAGE ("CRITICAL APPLICATIONS"). TI SEMICONDUCTOR PRODUCTS ARE NOT DESIGNED, AUTHORIZED, OR WARRANTED TO BE SUITABLE FOR USE IN LIFE-SUPPORT DEVICES OR SYSTEMS OR OTHER CRITICAL APPLICATIONS. INCLUSION OF TI PRODUCTS IN SUCH APPLICATIONS IS UNDERSTOOD TO BE FULLY AT THE CUSTOMER'S RISK.

In order to minimize risks associated with the customer's applications, adequate design and operating safeguards must be provided by the customer to minimize inherent or procedural hazards.

TI assumes no liability for applications assistance or customer product design. TI does not warrant or represent that any license, either express or implied, is granted under any patent right, copyright, mask work right, or other intellectual property right of TI covering or relating to any combination, machine, or process in which such semiconductor products or services might be or are used. TI's publication of information regarding any third party's products or services does not constitute TI's approval, warranty or endorsement thereof.

Copyright © 1998, Texas Instruments Incorporated

Looking for pricing, stock, or lifecycle information?

Click below to explore more details on WIN SOURCE:

- View TIBPAL20R6-25CFN on WIN SOURCE
- Texas Instruments Information

Optimize Your Supply Chain with WIN SOURCE Solutions

- Global Sourcing Solution
- Obsolete Management
- Cost Control Management
- Shortage Management
- Alternative Solution
- Excess Inventory Management