THE DATASHEET OF

UCC25705DGKTR

www.win-source.net 0086-755-83957316

SLUS473B – NOVEMBER 1999 – REVISED OCTOBER 2010

- **Greater Than 4-MHz Operation**
- **Integrated Oscillator / Voltage Feed Forward Compensation**
- **>4:1 Input Voltage Range**
- **25-ns Current Limit Delay**
- **Programmable Maximum Duty Cycle Clamp**
- **Optocoupler Interface**
- **50-μA Start-Up Current**
- **4.2-mA Operating Current @ 1 MHz**
- **Smallest Footprint of the 8-pin MSOP Package Minimizes Board Area and Height**

D, OR P PACKAGE (TOP VIEW)

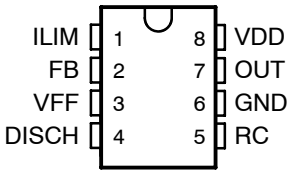

DGK PACKAGE (TOP VIEW)

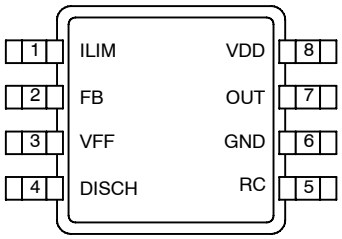

description

The UCC35705 and UCC35706 devices are 8-pin voltage mode primary side controllers with fast over-current protection. These devices are used as core high-speed building blocks in high performance isolated and non-isolated power converters.

UCC35705/UCC35706 devices feature a high speed oscillator with integrated feed-forward compensation for improved converter performance. A typical current sense to output delay time of 25 ns provides fast response to overload conditions. The IC also provides an accurate programmable maximum duty cycle clamp for increased protection which can also be disabled for the oscillator to run at maximum possible duty cycle.

Two UVLO options are offered. The UCC35705 with lower turn-on voltage is intended for dc-to-dc converters while the higher turn-on voltage and the wider UVLO range of the UCC35706 is better suited for offline applications.

The UCC35705/UCC35706 family is offered in 8-pin MSOP (DGK), SOIC (D) and PDIP (P) packages.

typical application schematic

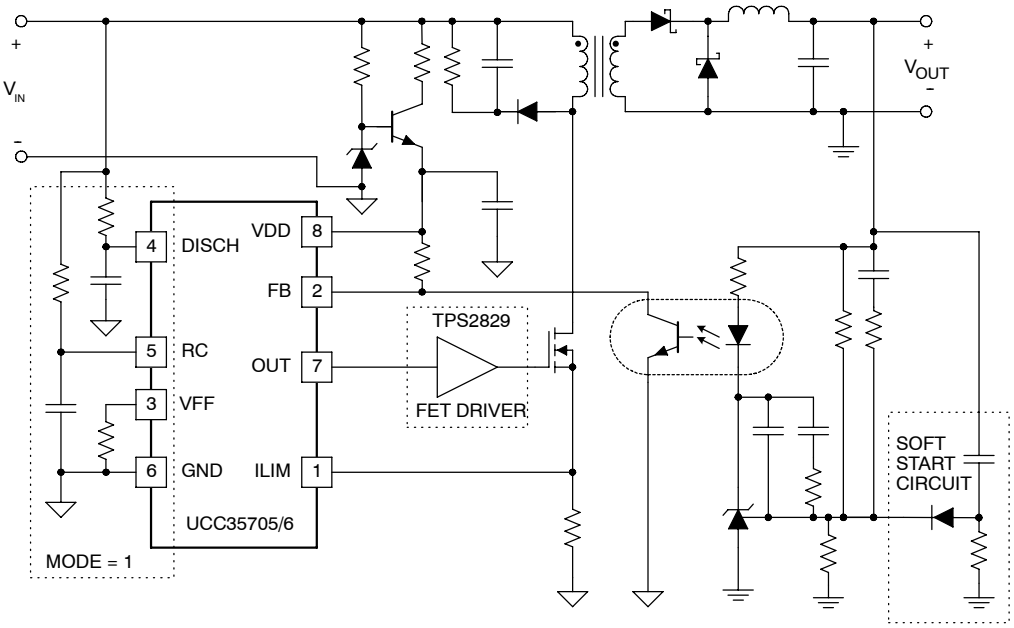

Please be aware that an important notice concerning availability, standard warranty, and use in critical applications of Texas Instruments semiconductor products and disclaimers thereto appears at the end of this data sheet.

PRODUCTION DATA information is current as of publication date. Products conform to specifications per the terms of Texas Instruments standard warranty. Production processing does not necessarily include testing of all parameters.

Copyright © 2001 – 2010, Texas Instruments Incorporated

absolute maximum ratings over operating free-air temperature (unless otherwise noted)†‡

Supply voltage . . . . . 15 V
Input voltage (VFF,RC,ILIM) . . . . . 7 V
Input voltage (FB) . . . . . 15 V
Input current (DISCH) . . . . . 1 mA
Output current (OUT) dc . . . . . ±20 mA
Storage temperature, T_{stg} . . . . . –65°C to 150°C
Junction temperature, T_J . . . . . –55°C to 150°C
Lead temperature (soldering, 10 sec.) . . . . . 300°C

† Stresses beyond those listed under "absolute maximum ratings" may cause permanent damage to the device. These are stress ratings only, and functional operation of the device at these or any other conditions beyond those indicated under "recommended operating conditions" is not implied. Exposure to absolute-maximum-rated conditions for extended periods may affect device reliability.

‡ All voltages are with respect to GND. Currents are positive into, negative out of the specified terminal. Consult Packaging Section of the *Power Supply Control Data Book (TI Literature Number SLUD003)* for thermal limitations and considerations of packages.

AVAILABLE OPTIONS

$T_A = T_J$	Packaged Devices			
	UVLO Option	SOIC-8 Small Outline (D)†	PDIP-8 Plastic Dip (P)	MSOP-8 Small Outline (DGK)†
–40°C to 85°C	8.8V/8V	UCC25705D	UCC25705P	UCC25705DGK
	12V/8V	UCC25706D	UCC25706P	UCC25706DGK
0°C to 70°C	8.8V/8V	UCC35705D	UCC35705P	UCC35705DGK
	12V/8V	UCC35706D	UCC35706P	UCC35706DGK

† D (SOIC–8) and DGK (MSOP–8) packages are available taped and reeled. Add R suffix to device type (e.g. UCC35705DR) to order quantities of 2500 devices per reel for SOIC-8 and 2000 devices per reel for the MSOP-8.

electrical characteristics, V_{DD} = 11 V, V_{IN} = 30 V, R_T = 47 k, R_{DISCH} = 400 k, R_{FF} = 14 k, C_T = 220 pF, C_{VDD} = 0.1 μF, and no load on the outputs, 0°C ≤ T_A ≤ 70°C for the UCC3570x and –40°C ≤ T_A ≤ 85°C for the UCC2570x, $T_A = T_J$, (unless otherwise specified)

UVLO section (UCCx5705)

PARAMETER	TEST CONDITIONS	MIN	TYP	MAX	UNITS
Start threshold		8.0	8.8	9.6	V
Stop threshold		7.4	8.2	9.0	V
Hysteresis		0.3	0.6	1.0	V

UVLO section (UCCx5706)

PARAMETER	TEST CONDITIONS	MIN	TYP	MAX	UNITS
Start threshold		11.2	12.0	12.8	V
Stop threshold		7.2	8.0	8.8	V
Hysteresis		3.5	4.0	4.5	V

supply current section

PARAMETER	TEST CONDITIONS	MIN	TYP	MAX	UNITS
Start-up current	V_{DD} = UVLO start – 1 V, V_{DD} comparator off		30	90	μA
I_{DD} active	V_{DD} comparator on, oscillator running at 1 MHz		4.2	5.0	mA

electrical characteristics, V_{DD} = 11 V, V_{IN} = 30 V, R_T = 47 k, R_{DISCH} = 400 k, R_{FF} = 14 k, C_T = 220 pF, C_{VDD} = 0.1 μF, and no load on the outputs, 0°C ≤ T_A ≤ 70°C for the UCC3570x and –40°C ≤ T_A ≤ 85°C for the UCC2570x, T_A = T_J, (unless otherwise specified)

line sense section

PARAMETER	TEST CONDITIONS	MIN	TYP	MAX	UNITS
Low line comparator threshold		0.95	1.00	1.05	V
Input bias current (VFF)		–100		100	nA

oscillator section

PARAMETER	TEST CONDITIONS	MIN	TYP	MAX	UNITS
Frequency	VFF = 1.2 V to 4.8 V	0.9	1.0	1.1	MHz
CT peak voltage	VFF = 1.2 V, See Note 1		1.2		V
	VFF = 4.8 V, See Note 1		4.8		V
CT valley voltage	See Note 1		0		V

NOTE 1: Ensured by design. Not production tested.

current limit section

PARAMETER	TEST CONDITIONS	MIN	TYP	MAX	UNITS
Input bias current		0.2	–0.2	–1	μA
Current limit threshold		180	200	220	mV
Propagation delay, ILIM to OUT	50 mV overdrive		25	35	ns

pulse width modulator section

PARAMETER	TEST CONDITIONS	MIN	TYP	MAX	UNITS
FB input impedance	V_{FB} = 3 V	30	50	90	kΩ
Minimum duty cycle	V_{FB} < 2 V			0	%
Maximum duty cycle	V_{FB} = V_{DD}, F_{OSC} = 1 MHz	70	75	80	%
	V_{DISCH} = 0 V, F_{OSC} = 1 MHz		93		%
PWM gain	VFF = 2.5 V, MODE = 1		12		%/V
Propagation delay, PWM to OUT			65	120	ns

output section

PARAMETER	TEST CONDITIONS	MIN	TYP	MAX	UNITS
VOH	I_{OUT} = –5 mA, V_{DD} – output		0.3	0.6	V
VOL	I_{OUT} = 5 mA		0.15	0.4	V
Rise time	C_{LOAD} = 50 pF		10	25	ns
Fall time	C_{LOAD} = 50 pF		10	25	ns

pin descriptions

DISCH: A resistor to VIN sets the oscillator discharge current programming a maximum duty cycle. When grounded, an internal comparator switches the oscillator to a quick discharge mode. A small 100-pF capacitor between DISCH and GND may reduce oscillator jitter without impacting feed-forward performance. I_{DISCH} must be between 25 μA and 250 μA over the entire V_{IN} range.

FB: Input to the PWM comparator. This pin is intended to interface with an optocoupler. Input impedance is 50-kΩ typical.

GND: Ground return pin.

ILIM: Provides a pulse-by-pulse current limit by terminating the PWM pulse when the input is above 200 mV. This provides a high speed (25 ns typical) path to reset the PWM latch, allowing for a pulse-by-pulse current limit.

OUT: The output is intended to drive an external FET driver or other high impedance circuits, but is not intended to directly drive a power MOSFET. This improves the controller's noise immunity. The output resistance of the PWM controller, typically 60 Ω pull-up and 30 Ω pull-down, will result in excessive rise and fall times if a power MOSFET is directly driven at the speeds for which the UCC35705/6 is optimized.

RC: The oscillator can be configured to provide a maximum duty cycle clamp. In this mode the on–time is set by RT and CT, while the off-time is set by RDISCH and CT. Since the voltage ramp on CT is proportional to VIN, feed-forward action is obtained. Since the peak oscillator voltage is also proportional to VIN, constant frequency operation is maintained over the full power supply input range. When the DISCH pin is grounded, the duty cycle clamp is disabled. The RC pin then provides a low impedance path to ground CT during the off time.

VDD: Power supply pin. This pin should be bypassed with a 0.1-μF capacitor for proper operation. The undervoltage lockout function of the UCC35705/6 allows for a low current startup mode and ensures that all circuits become active in a known state. The UVLO thresholds on the UCC35705 are appropriate for a dc-to-dc converter application. The wider UVLO hysteresis of the UCC35706 (typically 4 V) is optimized for a bootstrap startup mode from a high impedance source.

VFF: The feed-forward pin provides the controller with a voltage proportional to the power supply input voltage. When the oscillator is providing a duty cycle clamp, a current of $2 \times I_{DISCH}$ is sourced from the VFF pin. A single resistor RFF between VFF and GND then set VFF to:

$$VFF \approx VIN \times \left(\frac{2 \times R_{FF}}{2 \times R_{FF} + R_{DISCH}} \right)$$

When the DISCH pin is grounded and the duty cycle clamp is not used, the internal current source is disabled and a resistor divider from VIN is used to set VFF. In either case, when the voltage on VFF is less than 1.0 V, both the output and oscillator are disabled.

pin descriptions (continued)

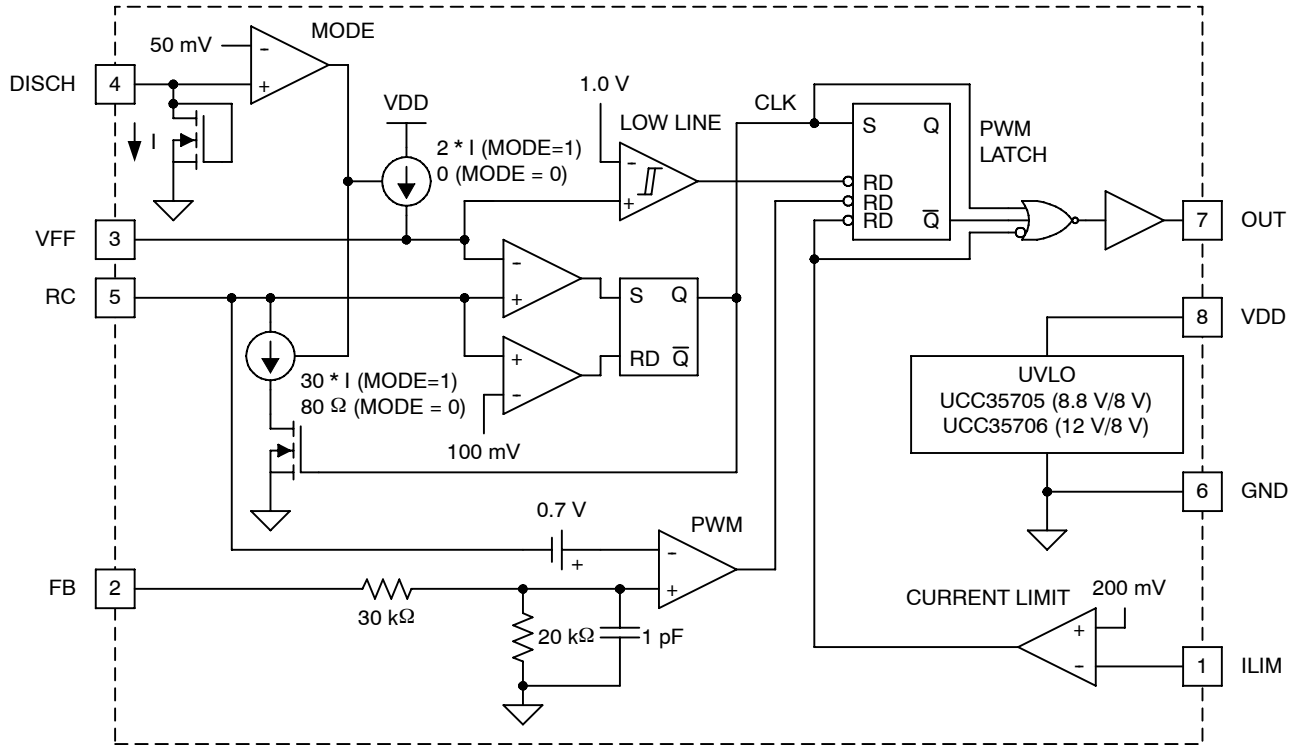

Figure 1. Block Diagram

FUNCTIONAL DESCRIPTION

oscillator and PWM

The oscillator can be programmed to provide a duty cycle clamp or be configured to run at the maximum possible duty cycle.

The PWM latch is set during the oscillator discharge and is reset by the PWM comparator when the C_T waveform is greater than the feedback voltage. The voltage at the FB pin is attenuated before it is applied to the PWM comparator. The oscillator ramp is shifted by approximately 0.65-V at room temperature at the PWM comparator. The offset has a temperature coefficient of approximately –2 mV/°C.

The ILIM comparator adds a pulse by pulse current limit by resetting the PWM latch when V_{ILIM} > 200 mV. The PWM latch is also reset by a low line condition (V_{FF} <1.0 V).

All reset conditions are dominant; asserting any output will force a zero duty cycle output.

oscillator with duty cycle clamp (MODE = 1)

The timing capacitor CT is charged from ground to VFF through RT. The discharge path is through an on-chip current sink that has a value of 30 × I_{DISCH}, where I_{DISCH} is the current through the external resistor RDISCH. Since the charge and discharge currents are both proportional to VIN, their ratio, and the maximum duty cycle remains constant as VIN varies.

FUNCTIONAL DESCRIPTION

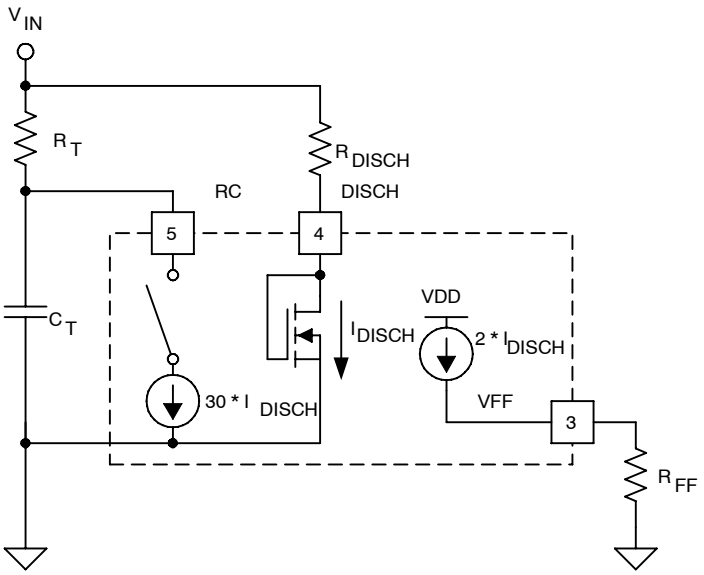

Figure 2. Duty Cycle Clamp (MODE = 1)

The on-time is approximately:

$$T_{ON} = \propto \times R_T \times C_T \quad \text{where } \propto = \frac{V_{FF}}{V_{IN}} \approx \frac{2 \times R_{FF}}{R_{DISCH}}$$

The off-time is:

$$T_{OFF} = \propto \times \frac{C_T \times \left(R_T \times R_{DISCH}\right)}{\left(30 \times R_T - R_{DISCH}\right)}$$

The frequency is:

$$f = \left(\frac{1}{\propto \times R_T \times C_T}\right) \times \frac{1}{1 + \frac{R_{DISCH}}{\left(30 \times R_T - R_{DISCH}\right)}}$$

The maximum duty cycle is:

$$\text{Duty Cycle} = \frac{T_{ON}}{T_{ON} + T_{OFF}} = \left(1 - \frac{R_{DISCH}}{30 \times R_T}\right)$$

FUNCTIONAL DESCRIPTION

component selection for oscillator with duty cycle clamp (MODE = 1)

For a power converter with the following specifications:

- $V_{IN(min)}$ = 18 V
- $V_{IN(max)}$ = 75 V
- $V_{IN(shutdown)}$ = 15 V
- F_{OSC} = 1 MHz
- D_{MAX} = 0.78 at $V_{IN(min)}$

In this mode, the on-time is approximately:

- $T_{ON(max)}$ = 780 ns
- $T_{OFF(min)}$ = 220 ns
- $V_{FF(min)} = \frac{18}{15} = 1.20$ V

(1) Pick C_T = 220 pF.

(2) Calculate R_T.

$$R_T = \frac{V_{IN(min)} \times T_{ON(max)}}{V_{FF(min)} \times C_T}$$

R_T = 51.1 kΩ

(3) R_{DISCH}

$$R_{DISCH} = \frac{30 \times R_T}{1 + \left[\frac{\left(\frac{V_{FF(min)}}{V_{IN(min)}}\right) \times R_T \times C_T}{T_{OFF(min)}}\right]}$$

R_{DISCH} = 383 kΩ.

I_{DISCH} must be between 25 μA and 250 μA over the entire VIN range.

With the calculated values, I_{DISCH} ranges from 44 μA to 193 μA, within the allowable range. If I_{DISCH} is too high, C_T must be decreased.

(4) R_{FF}

$$R_{FF} = \frac{V_{FF(min)} \times R_{DISCH}}{2 \times \left(V_{IN(min)} - 1\right)}$$

The nearest 1% standard value to the calculated value is 13.7 k.

FUNCTIONAL DESCRIPTION

oscillator without duty cycle clamp (MODE = 0)

In this mode, the timing capacitor is discharged through a low impedance directly to ground. The DISCH pin is externally grounded. A comparator connected to DISCH senses the ground connection and disables both the discharge current source and VFF current source. A resistor divider is now required to set VFF.

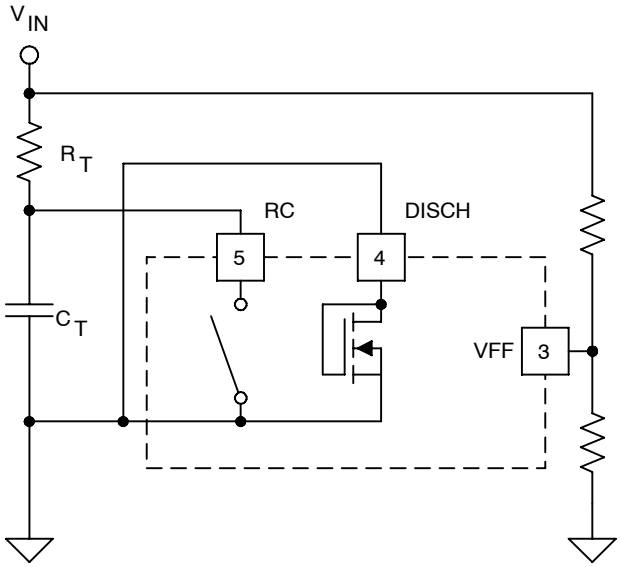

Figure 3. Ocsillator Without Clamp (MODE = 0)

In this mode, the on-time is approximately:

$$T_{ON} = \propto \times R_T \times C_T \quad \text{where } \propto = \frac{V_{FF}}{V_{IN}}$$

The off-time is:

$$T_{OFF} \approx 75 \text{ ns}$$

The frequency is:

$$f = \frac{1}{\propto \times R_T \times C_T + 75 \text{ ns}}$$

FUNCTIONAL DESCRIPTION

component selection for oscillator without duty cycle clamp (MODE = 0)

For a power converter with the following specifications:

- $V_{IN(min)}$ = 18 V
- $V_{IN(max)}$ = 75 V
- $V_{IN(shutdown)}$ = 15 V
- F_{OSC} = 1 MHz

With these specifications,

$$V_{FF(min)} = \frac{18}{15} = 1.2\ \text{V}$$

(1) Pick C_T = 220 pF

(2) Calculate R_T.

$$R_T = \frac{\frac{V_{IN(min)}}{V_{FF(min)}} \times \left(\frac{1}{F_{OSC}} - 75\ \text{ns}\right)}{C_T}$$

TYPICAL CHARACTERISTICS

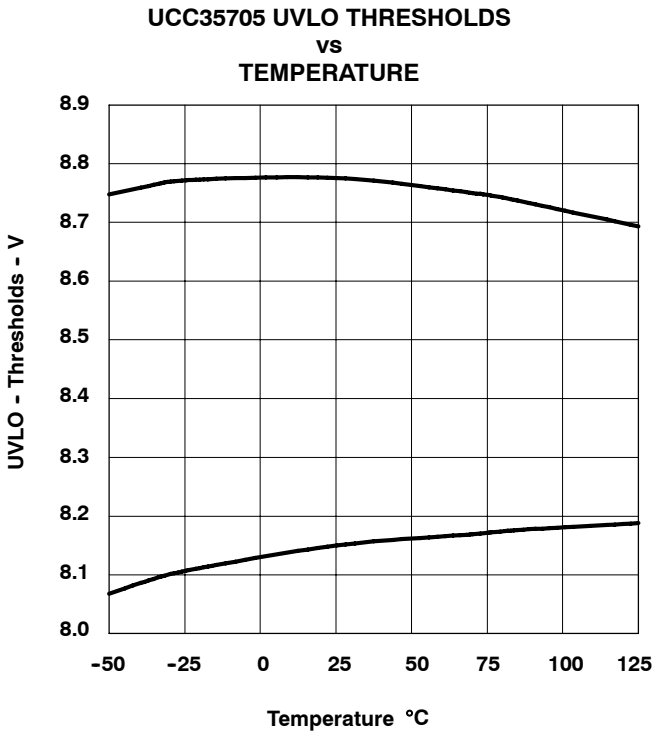

Figure 4

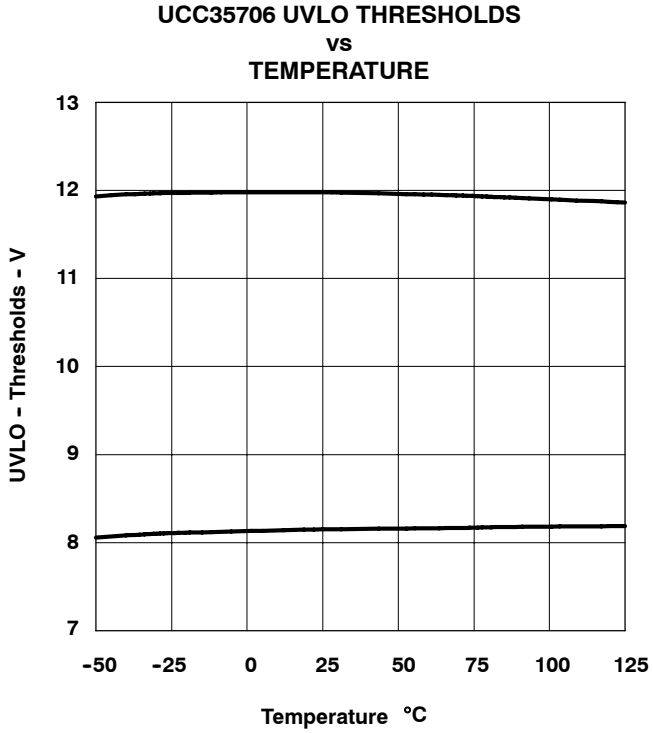

Figure 5

TYPICAL CHARACTERISTICS

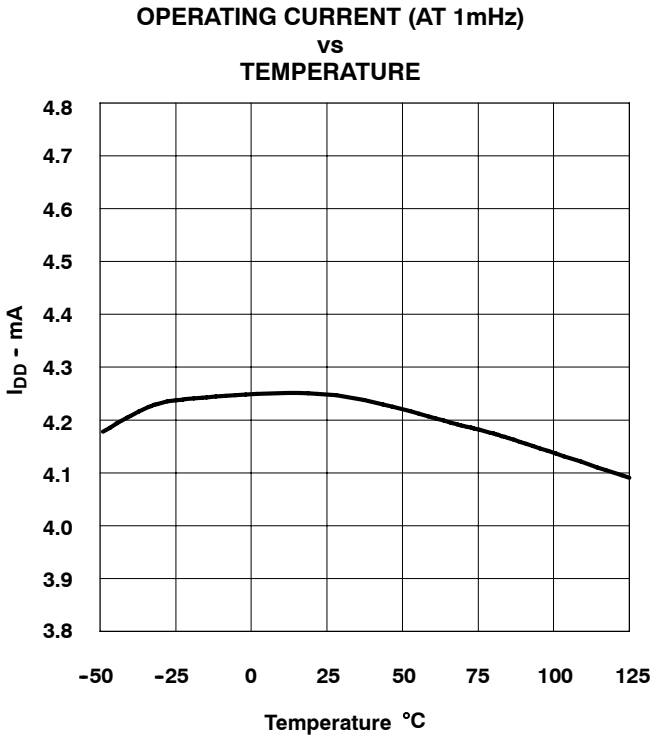

Figure 6

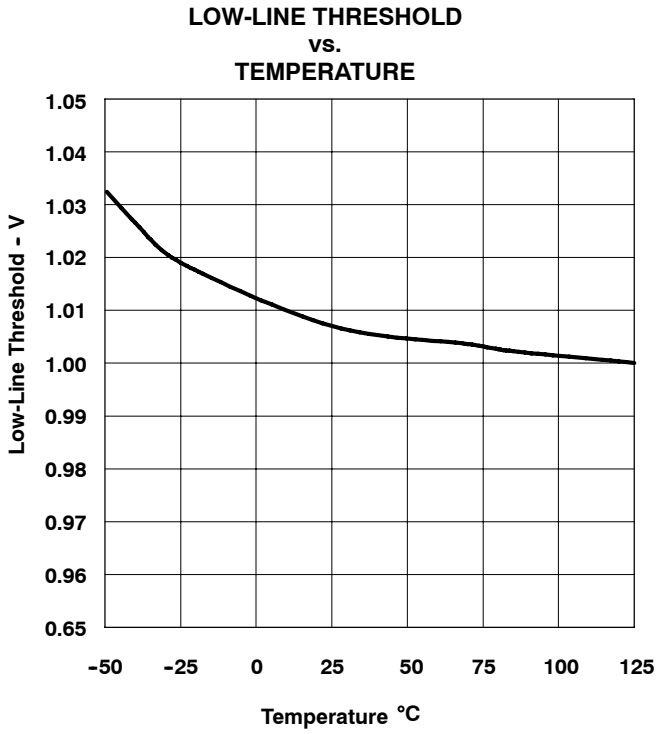

Figure 7

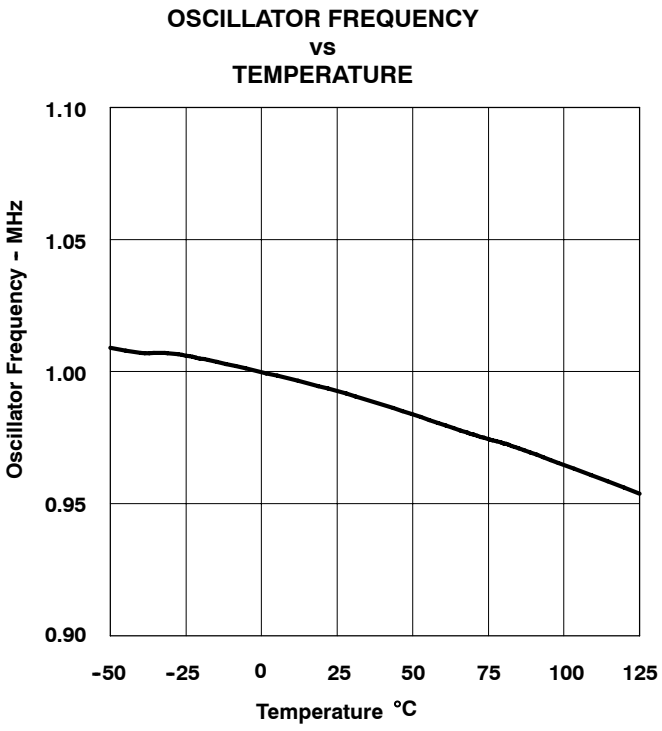

Figure 8

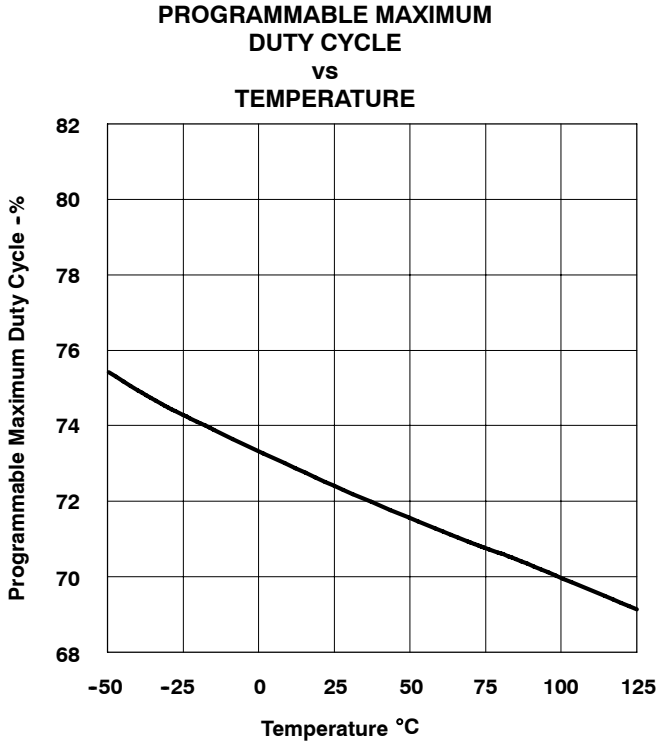

Figure 9

TYPICAL CHARACTERISTICS

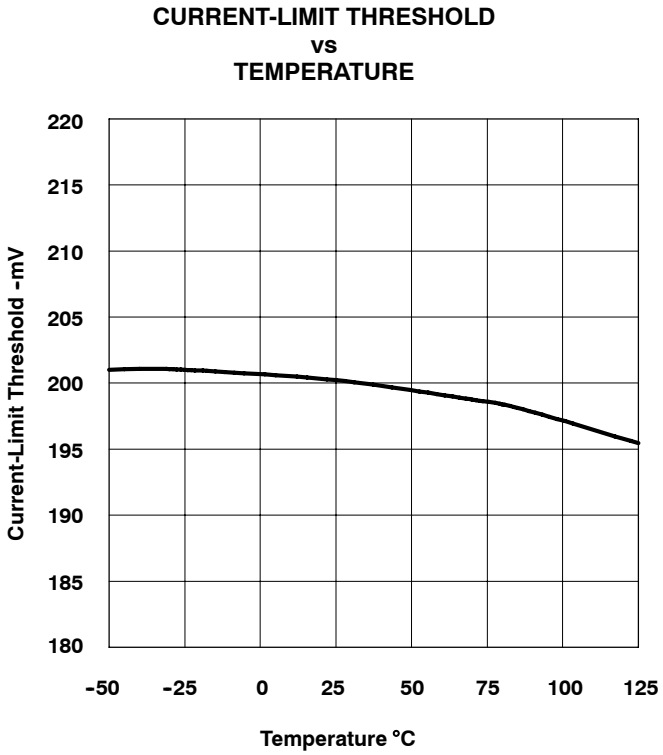

Figure 10

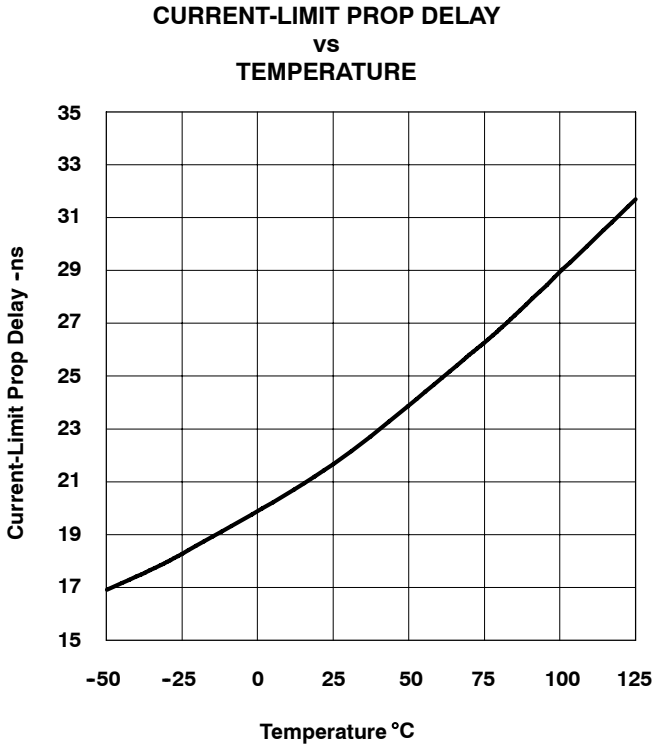

Figure 11

Revision History

Revision SLUS473A, March 2001 to SLUS473B:

- Modified “T_{OFF}” and “f” equation on page 6.

PACKAGING INFORMATION

Orderable Device	Status (1)	Package Type	Package Drawing	Pins	Package Qty	Eco Plan (2)	Lead/Ball Finish (6)	MSL Peak Temp (3)	Op Temp (°C)	Device Marking (4/5)	Samples
UCC25705D	ACTIVE	SOIC	D	8	75	Green (RoHS & no Sb/Br)	CU NIPDAU	Level-2-260C-1 YEAR	-40 to 85	25705	Samples
UCC25705DGK	ACTIVE	VSSOP	DGK	8	80	Green (RoHS & no Sb/Br)	CU NIPDAUAG	Level-2-260C-1 YEAR	-40 to 85	25705	Samples
UCC25705DGKTR	ACTIVE	VSSOP	DGK	8	2500	Green (RoHS & no Sb/Br)	CU NIPDAUAG	Level-2-260C-1 YEAR	-40 to 85	25705	Samples
UCC25705DGKTRG4	ACTIVE	VSSOP	DGK	8	2500	Green (RoHS & no Sb/Br)	CU NIPDAUAG	Level-2-260C-1 YEAR	-40 to 85	25705	Samples
UCC25705DTR	ACTIVE	SOIC	D	8	2500	Green (RoHS & no Sb/Br)	CU NIPDAU	Level-2-260C-1 YEAR	-40 to 85	25705	Samples
UCC25705P	ACTIVE	PDIP	P	8	50	Green (RoHS & no Sb/Br)	CU NIPDAU	N / A for Pkg Type	-40 to 85	UCC25705P	Samples
UCC25705PG4	ACTIVE	PDIP	P	8	50	Green (RoHS & no Sb/Br)	CU NIPDAU	N / A for Pkg Type	-40 to 85	UCC25705P	Samples
UCC25706D	ACTIVE	SOIC	D	8	75	Green (RoHS & no Sb/Br)	CU NIPDAU	Level-2-260C-1 YEAR	-40 to 85	25706	Samples
UCC25706DGK	ACTIVE	VSSOP	DGK	8	80	Green (RoHS & no Sb/Br)	CU NIPDAUAG	Level-2-260C-1 YEAR	-40 to 85	25706	Samples
UCC25706P	ACTIVE	PDIP	P	8	50	Green (RoHS & no Sb/Br)	CU NIPDAU	N / A for Pkg Type	-40 to 85	UCC25706P	Samples
UCC35705D	ACTIVE	SOIC	D	8	75	Green (RoHS & no Sb/Br)	CU NIPDAU	Level-2-260C-1 YEAR	0 to 70	35705	Samples
UCC35705DGK	ACTIVE	VSSOP	DGK	8	80	Green (RoHS & no Sb/Br)	CU NIPDAUAG	Level-2-260C-1 YEAR	0 to 70	35705	Samples
UCC35705DGKG4	ACTIVE	VSSOP	DGK	8	80	Green (RoHS & no Sb/Br)	CU NIPDAUAG	Level-2-260C-1 YEAR	0 to 70	35705	Samples
UCC35705DTR	ACTIVE	SOIC	D	8	2500	Green (RoHS & no Sb/Br)	CU NIPDAU	Level-2-260C-1 YEAR	0 to 70	35705	Samples
UCC35705P	ACTIVE	PDIP	P	8	50	Green (RoHS & no Sb/Br)	CU NIPDAU	N / A for Pkg Type	0 to 70	UCC35705P	Samples
UCC35706D	ACTIVE	SOIC	D	8	75	Green (RoHS & no Sb/Br)	CU NIPDAU	Level-2-260C-1 YEAR	0 to 70	35706	Samples
UCC35706DGK	ACTIVE	VSSOP	DGK	8	100	Green (RoHS & no Sb/Br)	CU NIPDAUAG	Level-2-260C-1 YEAR	0 to 70	35706	Samples

Orderable Device	Status (1)	Package Type	Package Drawing	Pins	Package Qty	Eco Plan (2)	Lead/Ball Finish (6)	MSL Peak Temp (3)	Op Temp (°C)	Device Marking (4/5)	Samples
UCC35706P	ACTIVE	PDIP	P	8	50	Green (RoHS & no Sb/Br)	CU NIPDAU	N / A for Pkg Type	0 to 70	UCC35706P	Samples

(1) The marketing status values are defined as follows:
ACTIVE: Product device recommended for new designs.
LIFEBUY: TI has announced that the device will be discontinued, and a lifetime-buy period is in effect.
NRND: Not recommended for new designs. Device is in production to support existing customers, but TI does not recommend using this part in a new design.
PREVIEW: Device has been announced but is not in production. Samples may or may not be available.
OBSOLETE: TI has discontinued the production of the device.

(2) **RoHS:** TI defines "RoHS" to mean semiconductor products that are compliant with the current EU RoHS requirements for all 10 RoHS substances, including the requirement that RoHS substance do not exceed 0.1% by weight in homogeneous materials. Where designed to be soldered at high temperatures, "RoHS" products are suitable for use in specified lead-free processes. TI may reference these types of products as "Pb-Free".
RoHS Exempt: TI defines "RoHS Exempt" to mean products that contain lead but are compliant with EU RoHS pursuant to a specific EU RoHS exemption.
Green: TI defines "Green" to mean the content of Chlorine (Cl) and Bromine (Br) based flame retardants meet JS709B low halogen requirements of <=1000ppm threshold. Antimony trioxide based flame retardants must also meet the <=1000ppm threshold requirement.

(3) MSL, Peak Temp. - The Moisture Sensitivity Level rating according to the JEDEC industry standard classifications, and peak solder temperature.

(4) There may be additional marking, which relates to the logo, the lot trace code information, or the environmental category on the device.

(5) Multiple Device Markings will be inside parentheses. Only one Device Marking contained in parentheses and separated by a "~" will appear on a device. If a line is indented then it is a continuation of the previous line and the two combined represent the entire Device Marking for that device.

(6) Lead/Ball Finish - Orderable Devices may have multiple material finish options. Finish options are separated by a vertical ruled line. Lead/Ball Finish values may wrap to two lines if the finish value exceeds the maximum column width.

Important Information and Disclaimer: The information provided on this page represents TI's knowledge and belief as of the date that it is provided. TI bases its knowledge and belief on information provided by third parties, and makes no representation or warranty as to the accuracy of such information. Efforts are underway to better integrate information from third parties. TI has taken and continues to take reasonable steps to provide representative and accurate information but may not have conducted destructive testing or chemical analysis on incoming materials and chemicals. TI and TI suppliers consider certain information to be proprietary, and thus CAS numbers and other limited information may not be available for release.

In no event shall TI's liability arising out of such information exceed the total purchase price of the TI part(s) at issue in this document sold by TI to Customer on an annual basis.

OTHER QUALIFIED VERSIONS OF UCC25706 :

- Automotive: UCC25706-Q1

NOTE: Qualified Version Definitions:

- Automotive - Q100 devices qualified for high-reliability automotive applications targeting zero defects

TAPE AND REEL INFORMATION

REEL DIMENSIONS

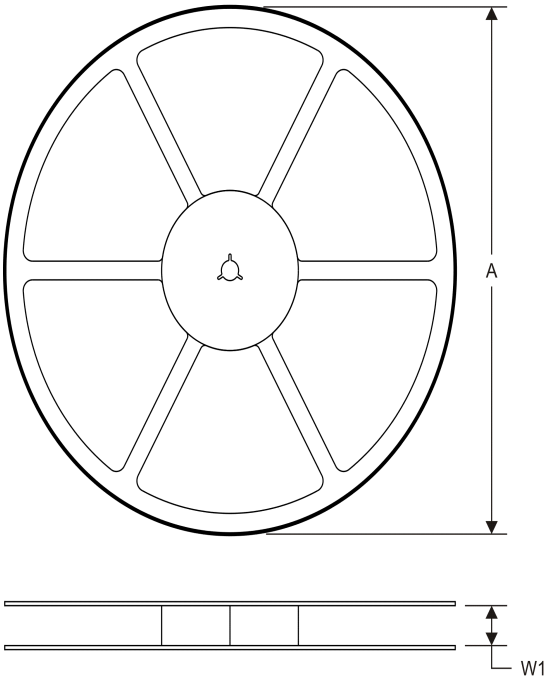

TAPE DIMENSIONS

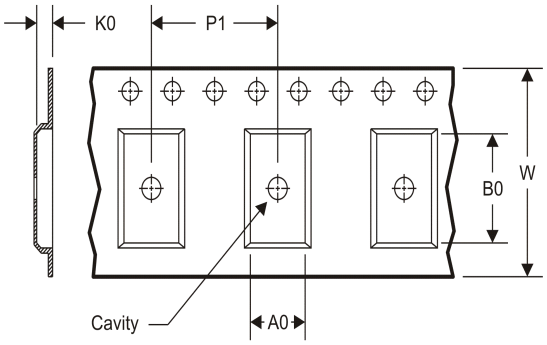

A0	Dimension designed to accommodate the component width
B0	Dimension designed to accommodate the component length
K0	Dimension designed to accommodate the component thickness
W	Overall width of the carrier tape
P1	Pitch between successive cavity centers

TAPE AND REEL INFORMATION

*All dimensions are nominal

Device	Package Type	Package Drawing	Pins	SPQ	Reel Diameter (mm)	Reel Width W1 (mm)	A0 (mm)	B0 (mm)	K0 (mm)	P1 (mm)	W (mm)	Pin1 Quadrant
UCC25705DGKTR	VSSOP	DGK	8	2500	330.0	12.4	5.3	3.4	1.4	8.0	12.0	Q1
UCC25705DTR	SOIC	D	8	2500	330.0	12.4	6.4	5.2	2.1	8.0	12.0	Q1
UCC35705DTR	SOIC	D	8	2500	330.0	12.4	6.4	5.2	2.1	8.0	12.0	Q1

TAPE AND REEL BOX DIMENSIONS

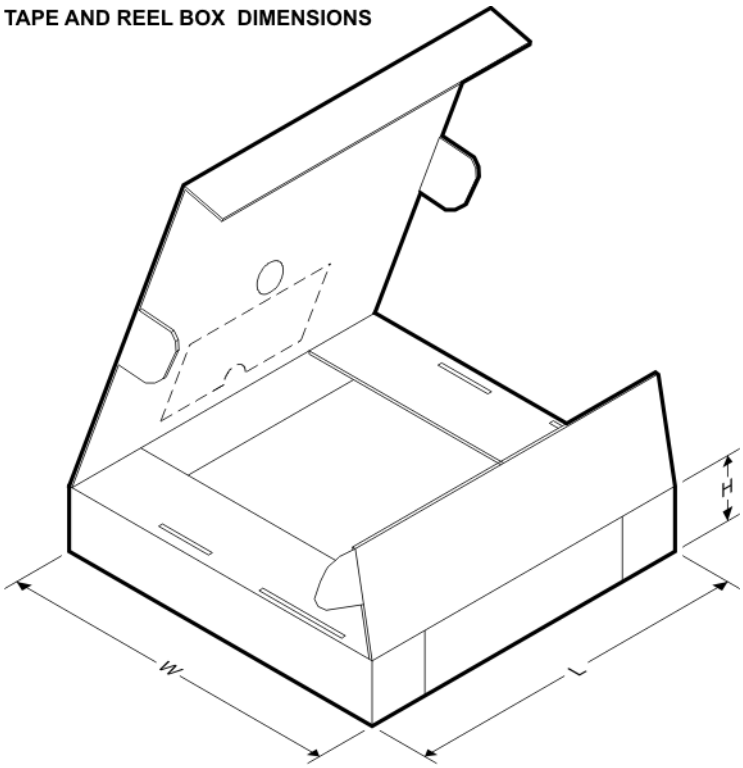

*All dimensions are nominal

Device	Package Type	Package Drawing	Pins	SPQ	Length (mm)	Width (mm)	Height (mm)
UCC25705DGKTR	VSSOP	DGK	8	2500	367.0	367.0	35.0
UCC25705DTR	SOIC	D	8	2500	367.0	367.0	35.0
UCC35705DTR	SOIC	D	8	2500	367.0	367.0	35.0

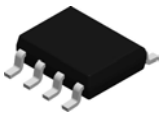

PACKAGE OUTLINE

D0008A

SOIC - 1.75 mm max height

SMALL OUTLINE INTEGRATED CIRCUIT

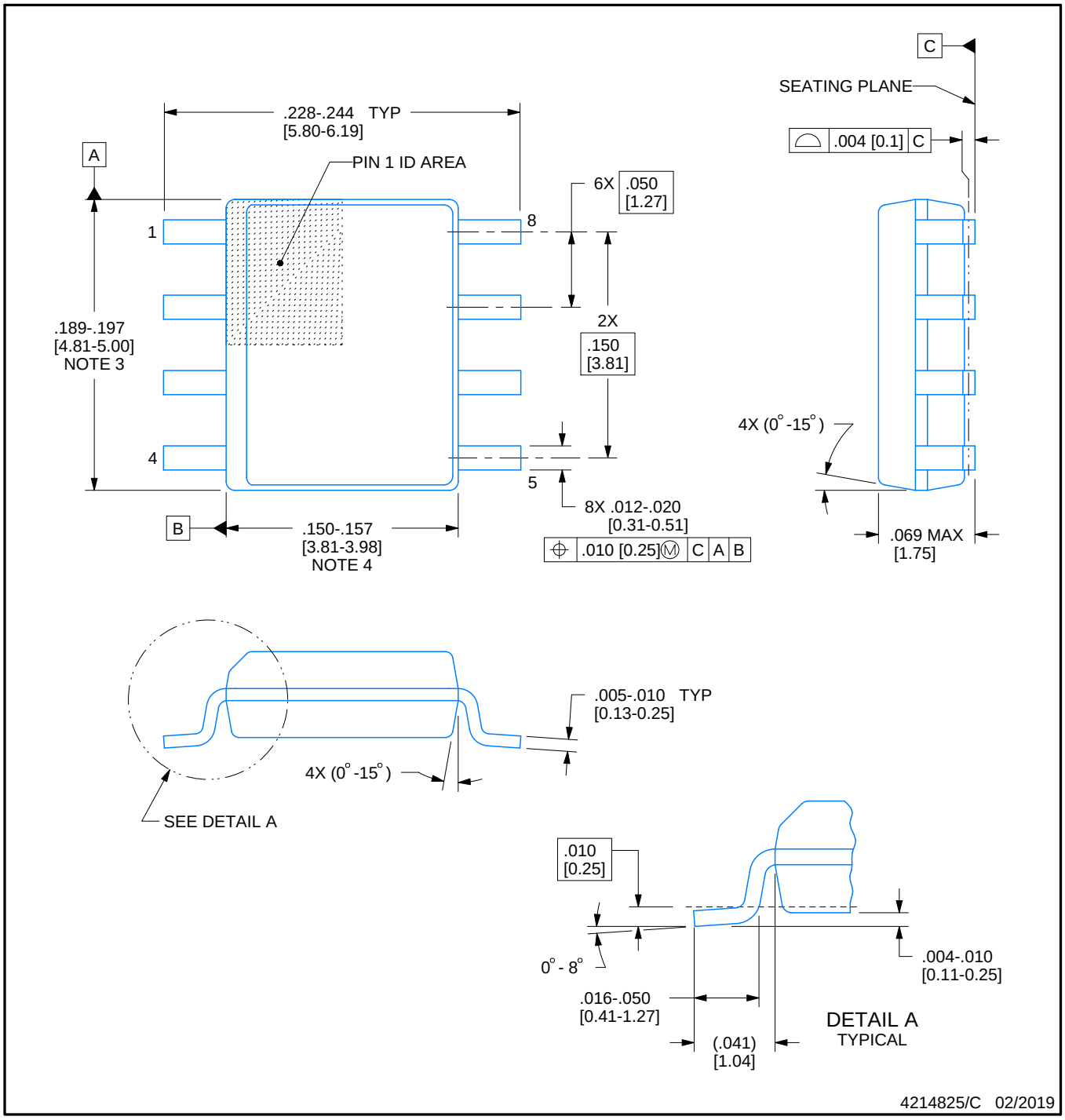

NOTES:

1. Linear dimensions are in inches [millimeters]. Dimensions in parenthesis are for reference only. Controlling dimensions are in inches. Dimensioning and tolerancing per ASME Y14.5M.
2. This drawing is subject to change without notice.
3. This dimension does not include mold flash, protrusions, or gate burrs. Mold flash, protrusions, or gate burrs shall not exceed .006 [0.15] per side.
4. This dimension does not include interlead flash.
5. Reference JEDEC registration MS-012, variation AA.

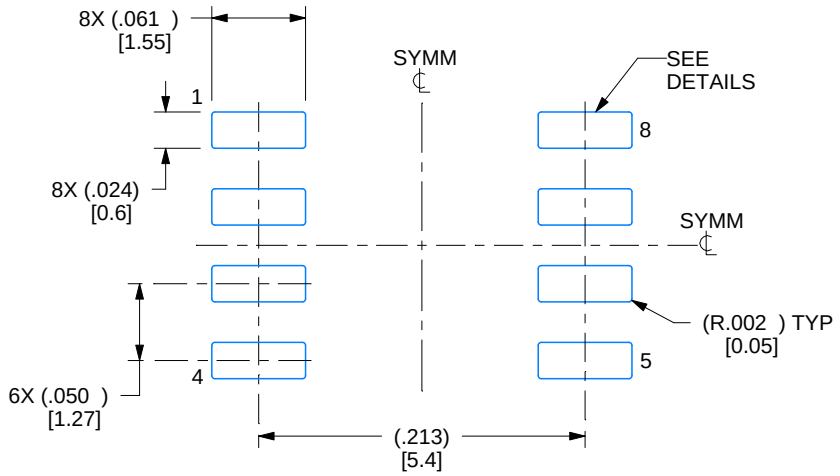

LAND PATTERN EXAMPLE
EXPOSED METAL SHOWN
SCALE:8X

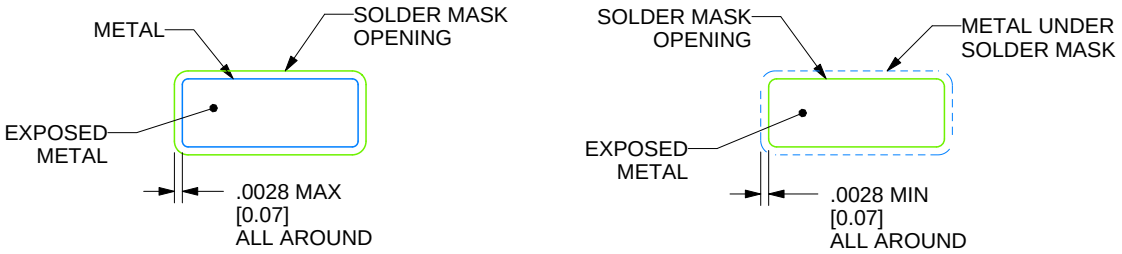

SOLDER MASK DETAILS

4214825/C 02/2019

NOTES: (continued)

6. Publication IPC-7351 may have alternate designs.
7. Solder mask tolerances between and around signal pads can vary based on board fabrication site.

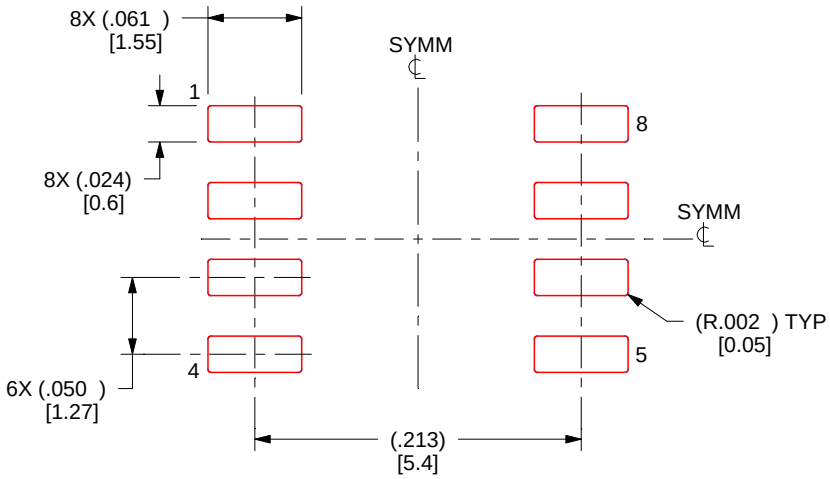

SOLDER PASTE EXAMPLE
BASED ON .005 INCH [0.125 MM] THICK STENCIL
SCALE:8X

4214825/C 02/2019

NOTES: (continued)

8. Laser cutting apertures with trapezoidal walls and rounded corners may offer better paste release. IPC-7525 may have alternate design recommendations.
9. Board assembly site may have different recommendations for stencil design.

P (R–PDIP–T8) PLASTIC DUAL–IN–LINE PACKAGE

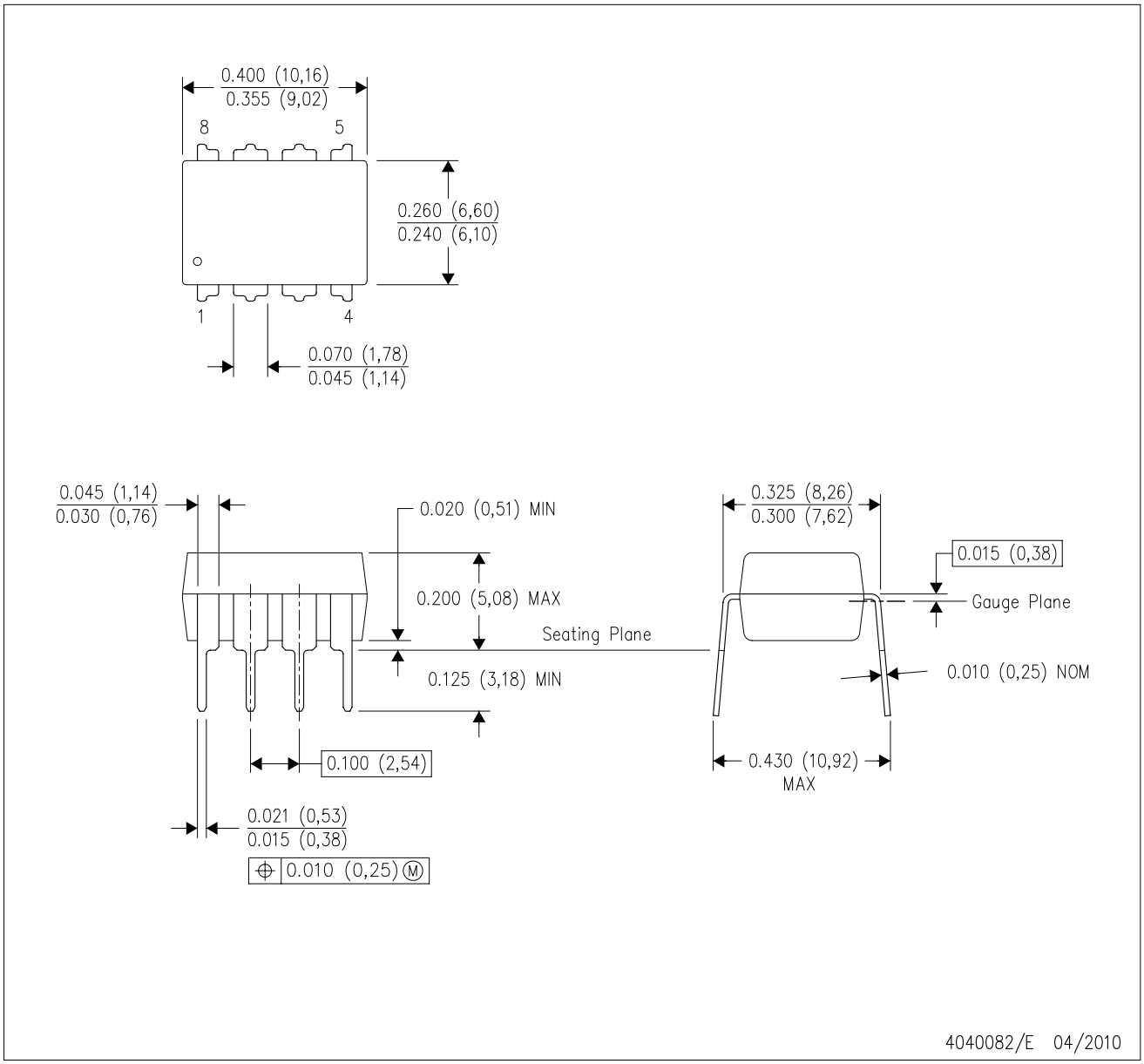

NOTES:
A. All linear dimensions are in inches (millimeters).
B. This drawing is subject to change without notice.
C. Falls within JEDEC MS–001 variation BA.

DGK (S–PDSO–G8) PLASTIC SMALL–OUTLINE PACKAGE

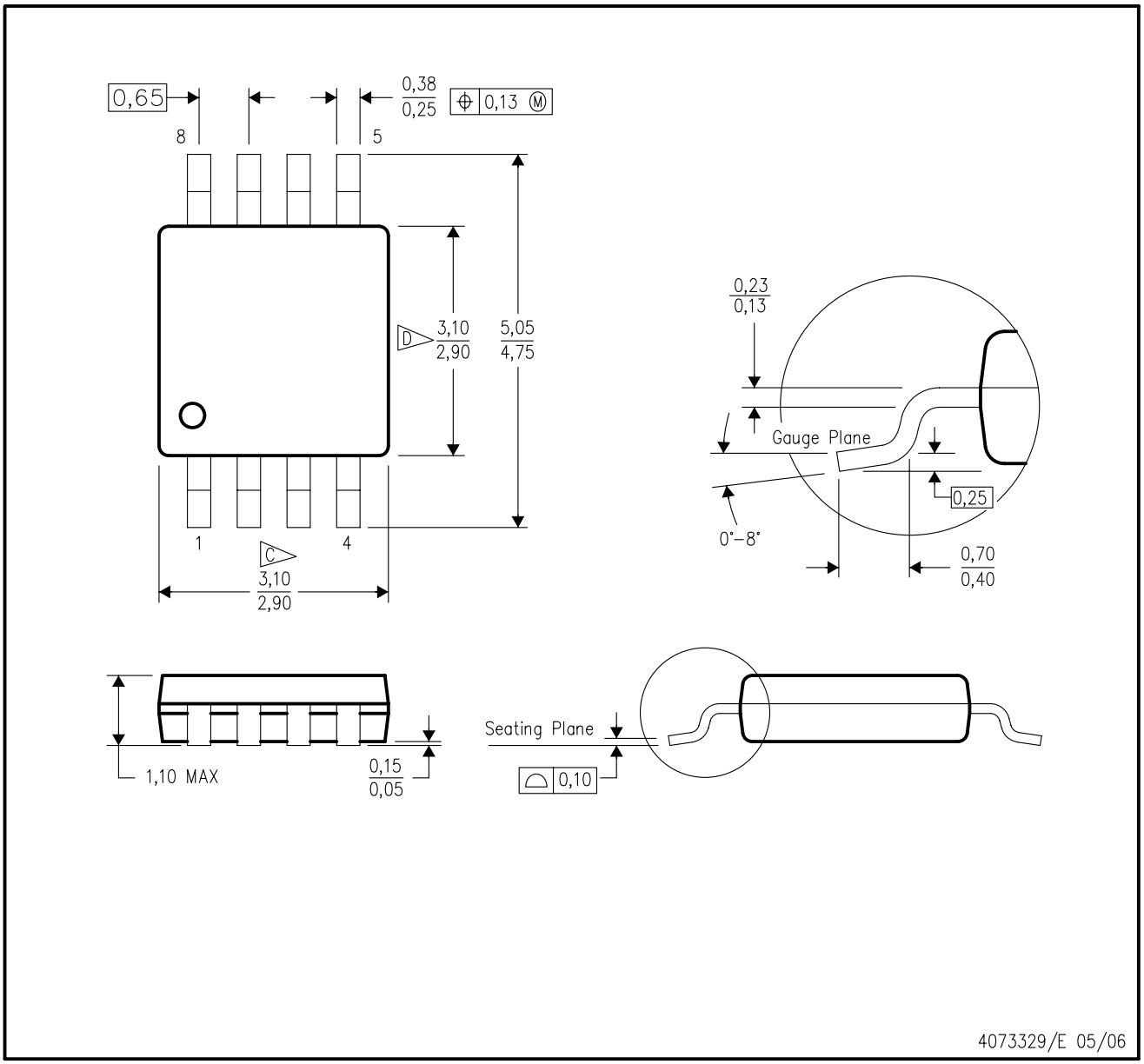

NOTES:
A. All linear dimensions are in millimeters.
B. This drawing is subject to change without notice.
C. Body length does not include mold flash, protrusions, or gate burrs. Mold flash, protrusions, or gate burrs shall not exceed 0.15 per end.
D. Body width does not include interlead flash. Interlead flash shall not exceed 0.50 per side.
E. Falls within JEDEC MO–187 variation AA, except interlead flash.

DGK (S–PDSO–G8) PLASTIC SMALL OUTLINE PACKAGE

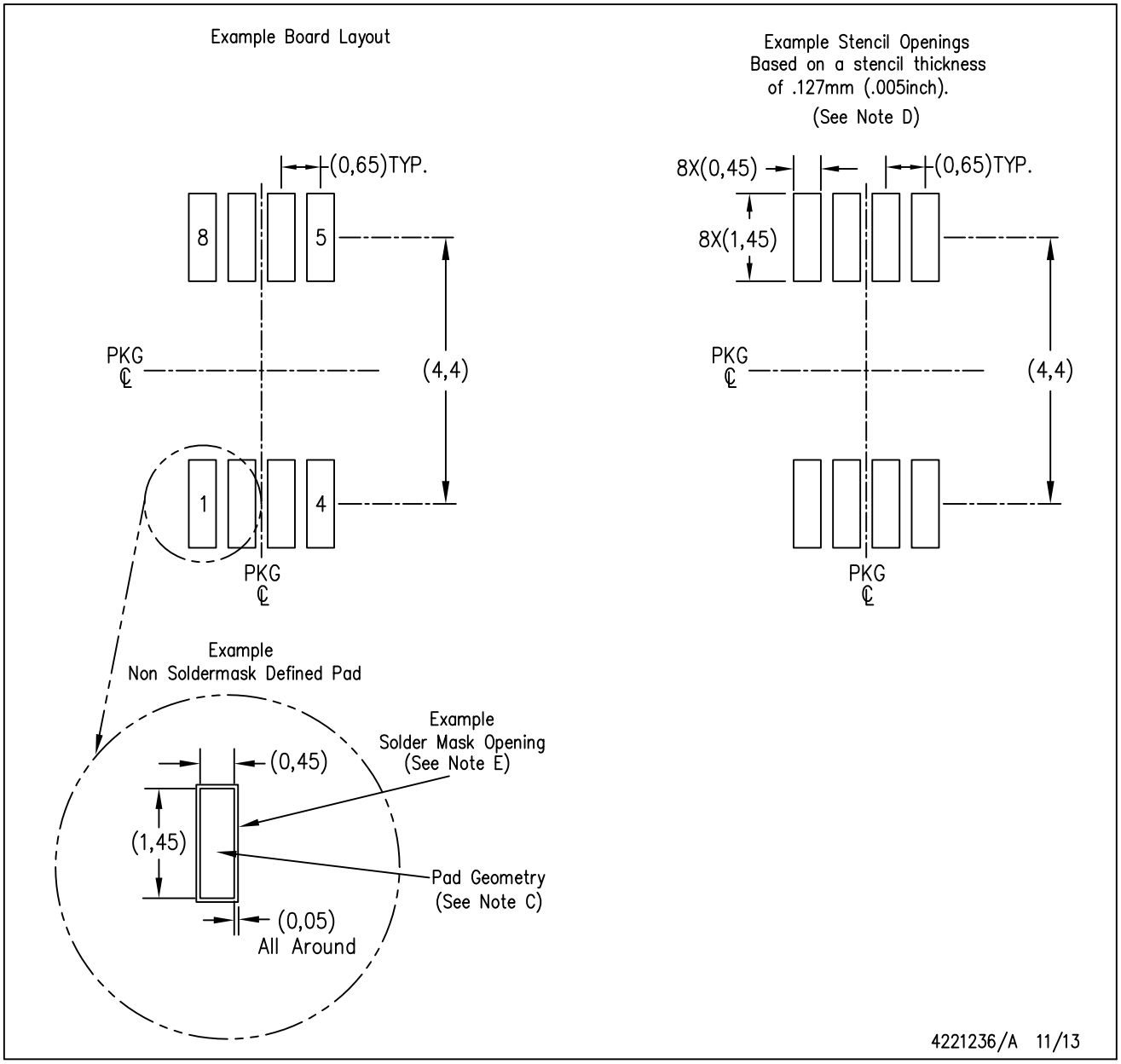

NOTES:
A. All linear dimensions are in millimeters.
B. This drawing is subject to change without notice.
C. Publication IPC–7351 is recommended for alternate designs.
D. Laser cutting apertures with trapezoidal walls and also rounding corners will offer better paste release. Customers should contact their board assembly site for stencil design recommendations. Refer to IPC–7525 for other stencil recommendations.
E. Customers should contact their board fabrication site for solder mask tolerances between and around signal pads.

IMPORTANT NOTICE AND DISCLAIMER

TI PROVIDES TECHNICAL AND RELIABILITY DATA (INCLUDING DATASHEETS), DESIGN RESOURCES (INCLUDING REFERENCE DESIGNS), APPLICATION OR OTHER DESIGN ADVICE, WEB TOOLS, SAFETY INFORMATION, AND OTHER RESOURCES “AS IS” AND WITH ALL FAULTS, AND DISCLAIMS ALL WARRANTIES, EXPRESS AND IMPLIED, INCLUDING WITHOUT LIMITATION ANY IMPLIED WARRANTIES OF MERCHANTABILITY, FITNESS FOR A PARTICULAR PURPOSE OR NON-INFRINGEMENT OF THIRD PARTY INTELLECTUAL PROPERTY RIGHTS.

These resources are intended for skilled developers designing with TI products. You are solely responsible for (1) selecting the appropriate TI products for your application, (2) designing, validating and testing your application, and (3) ensuring your application meets applicable standards, and any other safety, security, or other requirements. These resources are subject to change without notice. TI grants you permission to use these resources only for development of an application that uses the TI products described in the resource. Other reproduction and display of these resources is prohibited. No license is granted to any other TI intellectual property right or to any third party intellectual property right. TI disclaims responsibility for, and you will fully indemnify TI and its representatives against, any claims, damages, costs, losses, and liabilities arising out of your use of these resources.

TI’s products are provided subject to TI’s Terms of Sale (www.ti.com/legal/termsofsale.html) or other applicable terms available either on ti.com or provided in conjunction with such TI products. TI’s provision of these resources does not expand or otherwise alter TI’s applicable warranties or warranty disclaimers for TI products.

Mailing Address: Texas Instruments, Post Office Box 655303, Dallas, Texas 75265
Copyright © 2019, Texas Instruments Incorporated

Looking for pricing, stock, or lifecycle information?

Click below to explore more details on WIN SOURCE:

- View UCC25705DGKTR on WIN SOURCE
- Texas Instruments Information

Optimize Your Supply Chain with WIN SOURCE Solutions

- Global Sourcing Solution
- Obsolete Management
- Cost Control Management
- Shortage Management
- Alternative Solution
- Excess Inventory Management