THE DATASHEET OF

LP339DRG4

www.win-source.net 0086-755-83957316

The LP239 is obsolete and is no longer supplied.

SLCS004B − OCTOBER 1987 − REVISED SEPTEMBER 2004

- **Wide Supply-Voltage Range . . . 3 V to 30 V**
- **Ultralow Power Supply Current Drain . . . 60 μA Typ**
- **Low Input Biasing Current . . . 3 nA**
- **Low Input Offset Current . . . ±0.5 nA**
- **Low Input Offset Voltage . . . ±2 mV**
- **Common-Mode Input Voltage Includes Ground**
- **Output Voltage Compatible With MOS and CMOS Logic**
- **High Output Sink-Current Capability (30 mA at V_O = 2V)**
- **Power Supply Input Reverse-Voltage Protected**
- **Single-Power-Supply Operation**
- **Pin-for-Pin Compatible With LM239, LM339, LM2901**

D OR N PACKAGE (TOP VIEW)

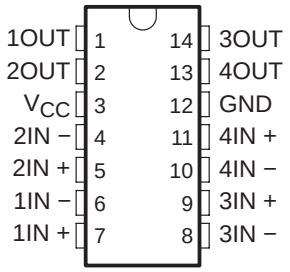

description/ordering information

The LP239, LP339, LP2901 are low-power quadruple differential comparators. Each device consists of four independent voltage comparators designed specifically to operate from a single power supply and typically to draw 60-μA drain current over a wide range of voltages. Operation from split power supplies also is possible and the ultra-low power-supply drain current is independent of the power-supply voltage.

Applications include limit comparators, simple analog-to-digital converters, pulse generators, squarewave generators, time-delay generators, voltage-controlled oscillators, multivibrators, and high-voltage logic gates. The LP239, LP339, LP2901 were designed specifically to interface with the CMOS logic family. The ultra-low power-supply current makes these products desirable in battery-powered applications.

The LP239 is characterized for operation from −25°C to 85°C. The LP339 is characterized for operation from 0°C to 70°C. The LP2901 is characterized for operation from −40°C to 85°C.

ORDERING INFORMATION

T_A	V_{IO}MAX AT 25°C	PACKAGE†		ORDERABLE PART NUMBER	TOP-SIDE MARKING
0°C to 70°C	±5 mV	PDIP (N)	Tube of 25	LP339N	LP339N
		SOIC (D)	Tube of 50	LP339D	LP339
			Reel of 2500	LP339DR	
−40°C to 85°C	±5 mV	PDIP (N)	Tube of 25	LP2901N	LP2901N
		SOIC (D)	Tube of 50	LP2901D	LP2901
			Reel of 2500	LP2901DR	

† Package drawings, standard packing quantities, thermal data, symbolization, and PCB design guidelines are available at www.ti.com/sc/package.

Please be aware that an important notice concerning availability, standard warranty, and use in critical applications of Texas Instruments semiconductor products and disclaimers thereto appears at the end of this data sheet.

PRODUCTION DATA information is current as of publication date. Products conform to specifications per the terms of Texas Instruments standard warranty. Production processing does not necessarily include testing of all parameters.

Copyright © 2004, Texas Instruments Incorporated

The LP239 is obsolete and is no longer supplied.

schematic diagram (each comparator)

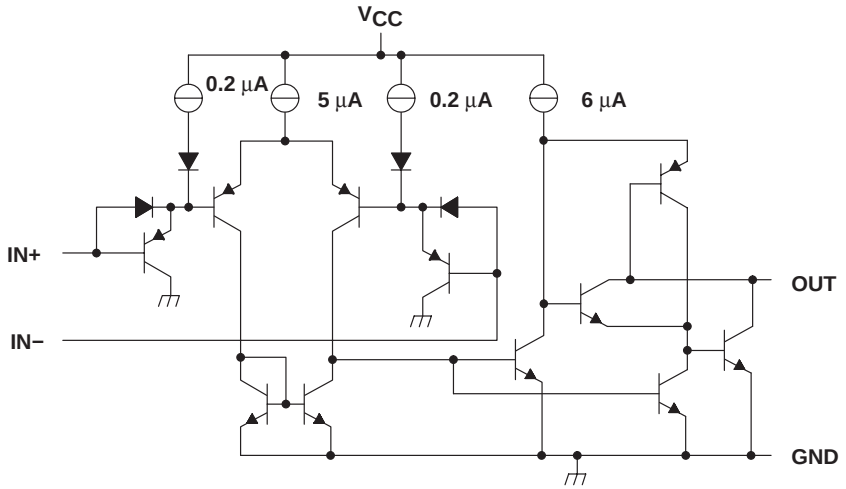

absolute maximum ratings over operating free-air temperature range (unless otherwise noted)†

Supply voltage, V_{CC} (see Note 1) . . . . . 36 V
Differential input voltage, V_{ID} (see Note 2) . . . . . ±36 V
Input voltage range, V_I (either input) . . . . . −0.3 V to 36 V
Input current, $V_I \leq -0.3$ V (see Note 3) . . . . . −50 mA
Duration of output short-circuit to ground (see Note 4) . . . . . Unlimited
Continuous total dissipation (see Note 5) . . . . . See Dissipation Rating Table
Operating free-air temperature range, T_A: LP239 . . . . . −25°C to 85°C
LP339 . . . . . 0°C to 70°C
LP2901 . . . . . −40°C to 85°C
Package thermal impedance, θ_{JA} (see Notes 6 and 7): D package . . . . . 86°C/W
N package . . . . . 80°C/W
Operating virtual junction temperature, T_J . . . . . 150°C
Lead temperature range 1,6 mm (1/16 inch) from case for 60 seconds: J package . . . . . 300°C
Storage temperature range, T_{stg} . . . . . −65°C to 150°C

† Stresses beyond those listed under absolute maximum ratings may cause permanent damage to the device. These are stress ratings only, and functional operation of the device at these or any other conditions beyond those indicated in the recommended operating conditions is not implied. Exposure to absolute-maximum-rated conditions for extended periods may affect device reliability.

NOTES:
1. All voltage values, except differential voltages, are with respect to the network ground.
2. Differential voltages are at IN+ with respect to IN −.
3. This input current only exists when the voltage at any of the inputs is driven negative. The current flows through the collector-base junction of the input clamping device. In addition to the clamping device action, there is lateral n-p-n parasitic transistor action. This action is not destructive, and normal output states are reestablished when the input voltage returns to a value more positive than − 0.3 V at T_A = 25°C.
4. Short circuits between outputs to V_{CC} can cause excessive heating and eventual destruction.
5. If the output transistors are allowed to saturate, the low-bias dissipation and the on-off characteristics of the outputs keep the dissipation very small (usually less than 100 mW).
6. Maximum power dissipation is a function of $T_J(max)$, θ_{JA}, and T_A. The maximum allowable power dissipation at any allowable ambient temperature is $P_D = (T_J(max) - T_A)/\theta_{JA}$. Operating at the absolute maximum T_J of 150°C can impact reliability.
7. The package thermal impedance is calculated in accordance with JESD 51-7.

DISSIPATION RATING TABLE

PACKAGE	$T_A \leq 25°C$ POWER RATING	DERATING FACTOR ABOVE T_A = 25°C	T_A = 70°C POWER RATING	T_A = 85°C POWER RATING
J	1025 mW	8.2 mW/°C	656 mW	533 mW

recommended operating conditions

			LP239		LP339		LP2901		UNIT
			MIN	MAX	MIN	MAX	MIN	MAX	
V_{CC}	Supply voltage		3	30	3	30	3	30	V
V_{IC}	Common-mode input voltage	V_{CC} = 5 V	0	3	0	3	0	3	V
		V_{CC} = 30 V	0	28	0	28	0	28	V
V_I	Input voltage	V_{CC} = 5 V	0	3	0	3	0	3	V
		V_{CC} = 30 V	0	28	0	28	0	28	V
T_A	Operating free-air temperature		−25	85	0	70	−40	85	°C

electrical characteristics, V_{CC} = 5 V, T_A = 25°C (unless otherwise noted)

PARAMETER		TEST CONDITIONS		T_A†	MIN	TYP	MAX	UNIT
V_{IO}	Input offset voltage	V_{CC} = 5 V to 30 V, RS = 0,	V_O = 2 V, See Note 6	25°C		±2	±5	mV
				Full range			±9	
I_{IO}	Input offset current			25°C		±0.5	±5	nA
				Full range		±1	±15	
I_{IB}	Input bias current	See Note 7		25°C		−2.5	−25	nA
				Full range		−4	−40	
V_{ICR}	Common-mode input voltage range	Single supply		25°C	0 to V_{CC} − 1.5			V
				Full range	0 to V_{CC} − 2			
A_{VD}	Large-signal differential voltage amplification	V_{CC} = 15 V,	RL = 15 kΩ			500		V/mV
	Output sink current	V_{I-} = 1 V, V_{I+} = 0	V_O = 2 V, See Note 8	25°C	20	30		mA
				Full range	15			
			V_O = 0.4 V	25°C	0.2	0.7		
	Output leakage current	V_{I+} = 1 V, V_{I-} = 0	V_O = 5 V	25°C		0.1		nA
			V_O = 30 V	Full range			1	µA
V_{ID}	Differential input voltage	V_I ≤ 0 (or V_{CC-} on split supplies)					36	V
I_{CC}	Supply current	R_L = ∞ all comparators				60	100	µA

† Full range is −25°C to 85°C for the LP239, 0°C to 70°C for the LP339, and −40°C to 85°C for the LP2901.

NOTES:
8. V_{IO} is measured over the full common-mode input voltage range.
9. Because of the p-n-p input stage, the direction of the current is out of the device. This current essentially is constant (i.e., independent of the output state). No loading change exists on the reference or input lines as long as the common-mode input voltage range is not exceeded.
10. The output sink current is a function of the output voltage. These devices have a bimodal output section that allows them to sink (via a Darlington connection) large currents at output voltages greater than 1.5 V, and smaller currents at output voltages less than 1.5 V.

switching characteristics, V_{CC} = 5 V, T_A = 25°C, R_L connected to 5 V through 5.1 kΩ

PARAMETER	TEST CONDITIONS	MIN	TYP	MAX	UNIT
Large-signal response time	TTL logic swing, V_{ref} = 1.4 V		1.3		µs
Response time			8		

APPLICATION INFORMATION

Figure 1 shows the basic configuration for using the LP239, LP339, or LP2901 comparator. Figure 2 shows the diagram for using one of these comparators as a CMOS driver.

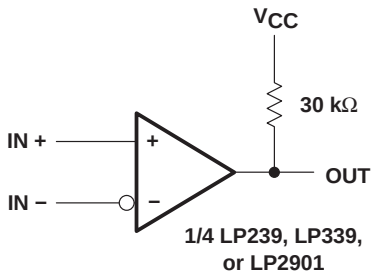

Figure 1. Basic Comparator

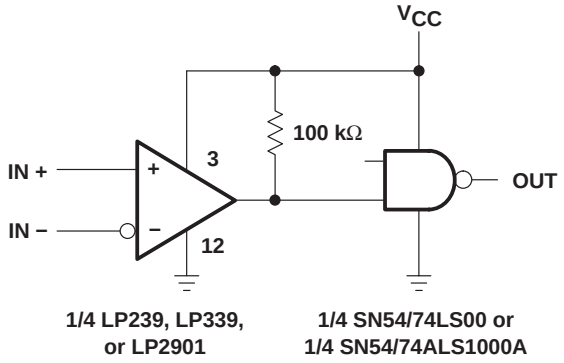

Figure 2. CMOS Driver

All pins of any unused comparators should be grounded. The bias network of the LP239, LP339, and LP2901 establishes a drain current that is independent of the magnitude of the power-supply voltage over the range of 2 V to 30 V. It usually is necessary to use a bypass capacitor across the power supply line.

The differential input voltage may be larger than V_{CC} without damaging the device. Protection should be provided to prevent the input voltages from going negative by more than −0.3 V. The output section has two distinct modes of operation: a Darlington mode and ground-emitter mode. This unique drive circuit permits the device to sink 30 mA at V_O = 2 V in the Darlington mode and 700 μA at V_O = 0.4 V in the ground-emitter mode. Figure 3 is a simplified schematic diagram of the output section. The output section is configured in a Darlington connection (ignoring Q3). If the output voltage is held high enough (above 1 V), Q1 is not saturated and the output current is limited only by the product of the h_{FE} of Q1, the h_{FE} of Q2, and I1 and the 60-Ω saturation resistance of Q2. The devices are capable of driving LEDs, relays, etc. in this mode while maintaining an ultra-low power-supply current of 60 μA, typically.

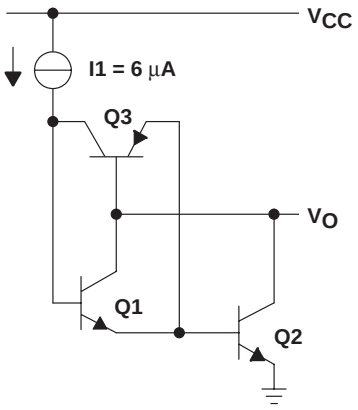

Figure 3. Output-Section Schematic Diagram

APPLICATION INFORMATION

Without transistor Q3, if the output voltage were allowed to drop below 0.8 V, transistor Q1 would saturate, and the output current would drop to zero. The circuit would be unable to pull low current loads down to ground or the negative supply, if used. Transistor Q3 has been included to bypass transistor Q1 under these conditions and apply the current I1 directly to the base of Q2. The output sink current now is approximately I1 times the h_{FE} of Q2 (700 μA at V_O = 0.4 V). The output of the devices exhibits a bimodal characteristic, with a smooth transition between modes.

In both cases, the output is an uncommitted collector. Several outputs can be tied together to provide a dot logic function. An output pullup resistor can be connected to any available power-supply voltage within the permitted power-supply range, and there is no restriction on this voltage, based on the magnitude of the voltage that is supplied to V_{CC} of the package.

PACKAGING INFORMATION

Orderable Device	Status (1)	Package Type	Package Drawing	Pins	Package Qty	Eco Plan (2)	Lead/Ball Finish (6)	MSL Peak Temp (3)	Op Temp (°C)	Device Marking (4/5)	Samples
LP2901D	ACTIVE	SOIC	D	14	50	Green (RoHS & no Sb/Br)	CU NIPDAU	Level-1-260C-UNLIM	-40 to 85	LP2901	Samples
LP2901DR	ACTIVE	SOIC	D	14	2500	Green (RoHS & no Sb/Br)	CU NIPDAU	Level-1-260C-UNLIM	-40 to 85	LP2901	Samples
LP2901DRE4	ACTIVE	SOIC	D	14	2500	Green (RoHS & no Sb/Br)	CU NIPDAU	Level-1-260C-UNLIM	-40 to 85	LP2901	Samples
LP2901DRG4	ACTIVE	SOIC	D	14	2500	Green (RoHS & no Sb/Br)	CU NIPDAU	Level-1-260C-UNLIM	-40 to 85	LP2901	Samples
LP2901N	ACTIVE	PDIP	N	14	25	Green (RoHS & no Sb/Br)	CU NIPDAU	N / A for Pkg Type	-40 to 85	LP2901N	Samples
LP339D	ACTIVE	SOIC	D	14	50	Green (RoHS & no Sb/Br)	CU NIPDAU	Level-1-260C-UNLIM	0 to 70	LP339	Samples
LP339DE4	ACTIVE	SOIC	D	14	50	Green (RoHS & no Sb/Br)	CU NIPDAU	Level-1-260C-UNLIM	0 to 70	LP339	Samples
LP339DG4	ACTIVE	SOIC	D	14	50	Green (RoHS & no Sb/Br)	CU NIPDAU	Level-1-260C-UNLIM	0 to 70	LP339	Samples
LP339DR	ACTIVE	SOIC	D	14	2500	Green (RoHS & no Sb/Br)	CU NIPDAU | CU SN	Level-1-260C-UNLIM	0 to 70	LP339	Samples
LP339DRE4	ACTIVE	SOIC	D	14	2500	Green (RoHS & no Sb/Br)	CU NIPDAU	Level-1-260C-UNLIM	0 to 70	LP339	Samples
LP339DRG4	ACTIVE	SOIC	D	14	2500	Green (RoHS & no Sb/Br)	CU NIPDAU	Level-1-260C-UNLIM	0 to 70	LP339	Samples
LP339N	ACTIVE	PDIP	N	14	25	Green (RoHS & no Sb/Br)	CU NIPDAU	N / A for Pkg Type	0 to 70	LP339N	Samples

(1) The marketing status values are defined as follows:
ACTIVE: Product device recommended for new designs.
LIFEBUY: TI has announced that the device will be discontinued, and a lifetime-buy period is in effect.
NRND: Not recommended for new designs. Device is in production to support existing customers, but TI does not recommend using this part in a new design.
PREVIEW: Device has been announced but is not in production. Samples may or may not be available.
OBSOLETE: TI has discontinued the production of the device.

(2) **RoHS:** TI defines "RoHS" to mean semiconductor products that are compliant with the current EU RoHS requirements for all 10 RoHS substances, including the requirement that RoHS substance do not exceed 0.1% by weight in homogeneous materials. Where designed to be soldered at high temperatures, "RoHS" products are suitable for use in specified lead-free processes. TI may reference these types of products as "Pb-Free".
RoHS Exempt: TI defines "RoHS Exempt" to mean products that contain lead but are compliant with EU RoHS pursuant to a specific EU RoHS exemption.

Green: TI defines "Green" to mean the content of Chlorine (Cl) and Bromine (Br) based flame retardants meet JS709B low halogen requirements of <=1000ppm threshold. Antimony trioxide based flame retardants must also meet the <=1000ppm threshold requirement.

(3) MSL, Peak Temp. - The Moisture Sensitivity Level rating according to the JEDEC industry standard classifications, and peak solder temperature.

(4) There may be additional marking, which relates to the logo, the lot trace code information, or the environmental category on the device.

(5) Multiple Device Markings will be inside parentheses. Only one Device Marking contained in parentheses and separated by a "~" will appear on a device. If a line is indented then it is a continuation of the previous line and the two combined represent the entire Device Marking for that device.

(6) Lead/Ball Finish - Orderable Devices may have multiple material finish options. Finish options are separated by a vertical ruled line. Lead/Ball Finish values may wrap to two lines if the finish value exceeds the maximum column width.

Important Information and Disclaimer: The information provided on this page represents TI's knowledge and belief as of the date that it is provided. TI bases its knowledge and belief on information provided by third parties, and makes no representation or warranty as to the accuracy of such information. Efforts are underway to better integrate information from third parties. TI has taken and continues to take reasonable steps to provide representative and accurate information but may not have conducted destructive testing or chemical analysis on incoming materials and chemicals. TI and TI suppliers consider certain information to be proprietary, and thus CAS numbers and other limited information may not be available for release.

In no event shall TI's liability arising out of such information exceed the total purchase price of the TI part(s) at issue in this document sold by TI to Customer on an annual basis.

OTHER QUALIFIED VERSIONS OF LP2901 :

- Automotive: LP2901-Q1

NOTE: Qualified Version Definitions:

- Automotive - Q100 devices qualified for high-reliability automotive applications targeting zero defects

TAPE AND REEL INFORMATION

REEL DIMENSIONS

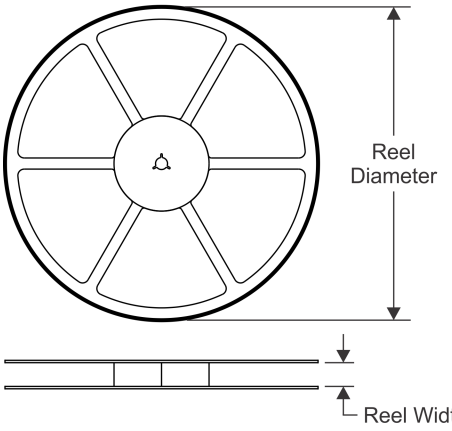

TAPE DIMENSIONS

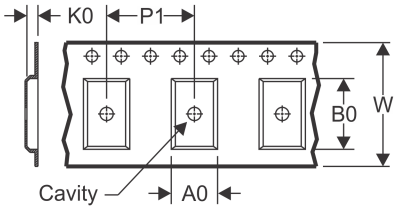

A0	Dimension designed to accommodate the component width
B0	Dimension designed to accommodate the component length
K0	Dimension designed to accommodate the component thickness
W	Overall width of the carrier tape
P1	Pitch between successive cavity centers

QUADRANT ASSIGNMENTS FOR PIN 1 ORIENTATION IN TAPE

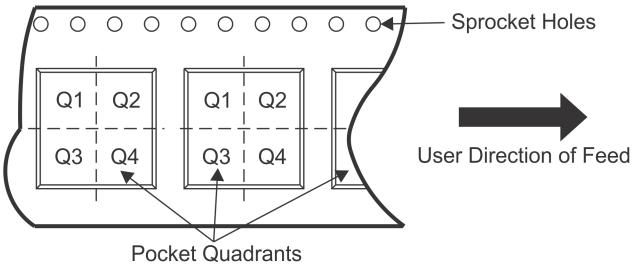

*All dimensions are nominal

Device	Package Type	Package Drawing	Pins	SPQ	Reel Diameter (mm)	Reel Width W1 (mm)	A0 (mm)	B0 (mm)	K0 (mm)	P1 (mm)	W (mm)	Pin1 Quadrant
LP2901DR	SOIC	D	14	2500	330.0	16.4	6.5	9.0	2.1	8.0	16.0	Q1
LP2901DR	SOIC	D	14	2500	330.0	16.4	6.5	9.0	2.1	8.0	16.0	Q1
LP339DR	SOIC	D	14	2500	330.0	16.4	6.5	9.0	2.1	8.0	16.0	Q1
LP339DR	SOIC	D	14	2500	330.0	16.8	6.5	9.5	2.1	8.0	16.0	Q1
LP339DR	SOIC	D	14	2500	330.0	16.4	6.5	9.0	2.1	8.0	16.0	Q1
LP339DRG4	SOIC	D	14	2500	330.0	16.4	6.5	9.0	2.1	8.0	16.0	Q1

TAPE AND REEL BOX DIMENSIONS

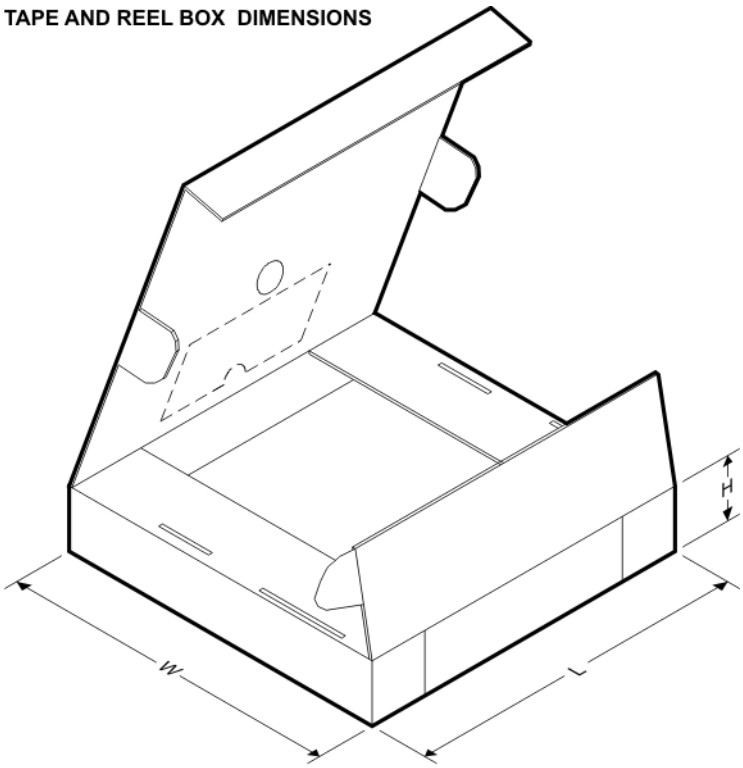

*All dimensions are nominal

Device	Package Type	Package Drawing	Pins	SPQ	Length (mm)	Width (mm)	Height (mm)
LP2901DR	SOIC	D	14	2500	367.0	367.0	38.0
LP2901DR	SOIC	D	14	2500	333.2	345.9	28.6
LP339DR	SOIC	D	14	2500	333.2	345.9	28.6
LP339DR	SOIC	D	14	2500	364.0	364.0	27.0
LP339DR	SOIC	D	14	2500	367.0	367.0	38.0
LP339DRG4	SOIC	D	14	2500	333.2	345.9	28.6

D (R–PDSO–G14) PLASTIC SMALL OUTLINE

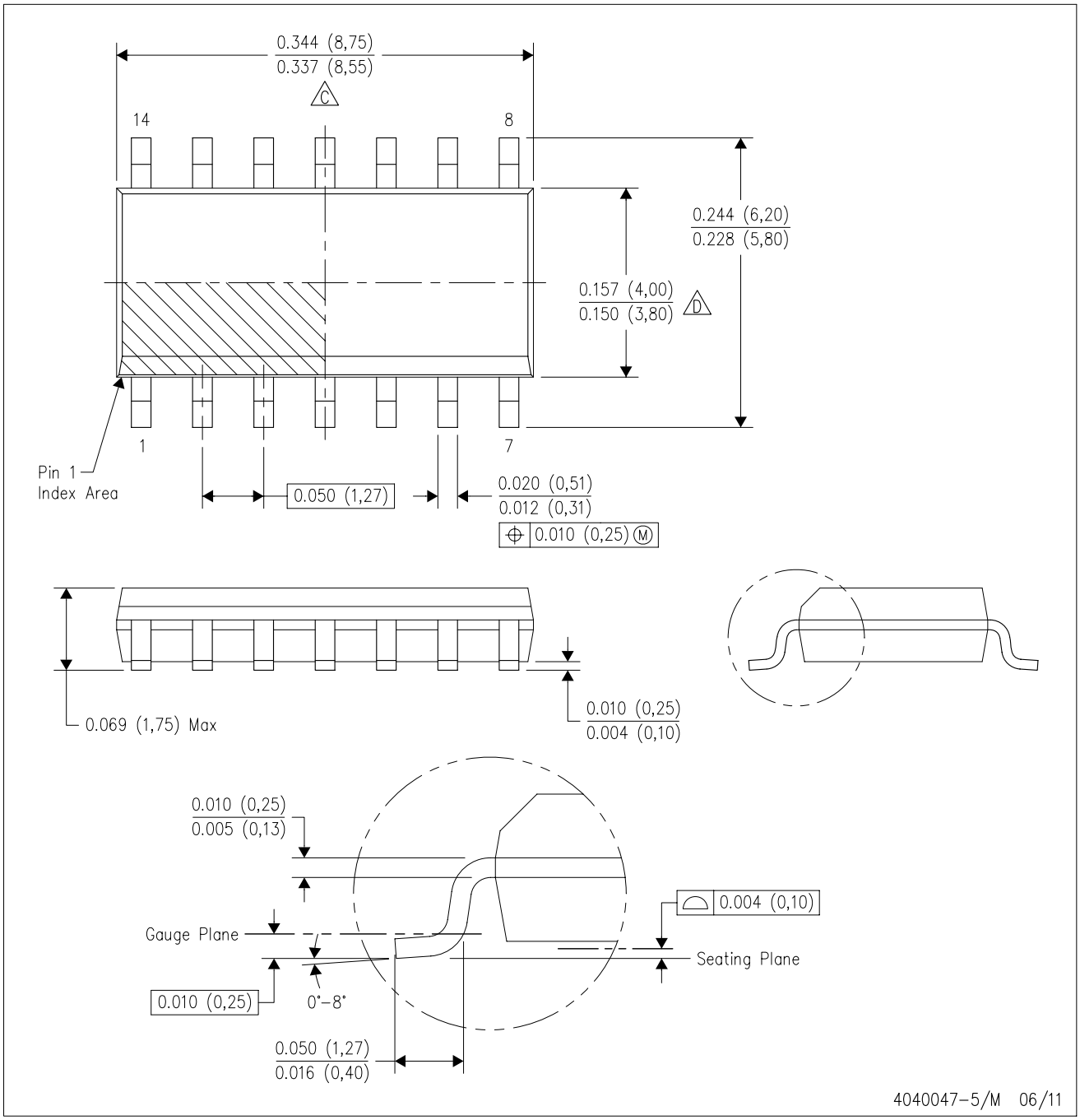

NOTES:
A. All linear dimensions are in inches (millimeters).
B. This drawing is subject to change without notice.
C. Body length does not include mold flash, protrusions, or gate burrs. Mold flash, protrusions, or gate burrs shall not exceed 0.006 (0,15) each side.
D. Body width does not include interlead flash. Interlead flash shall not exceed 0.017 (0,43) each side.
E. Reference JEDEC MS–012 variation AB.

D (R–PDSO–G14) PLASTIC SMALL OUTLINE

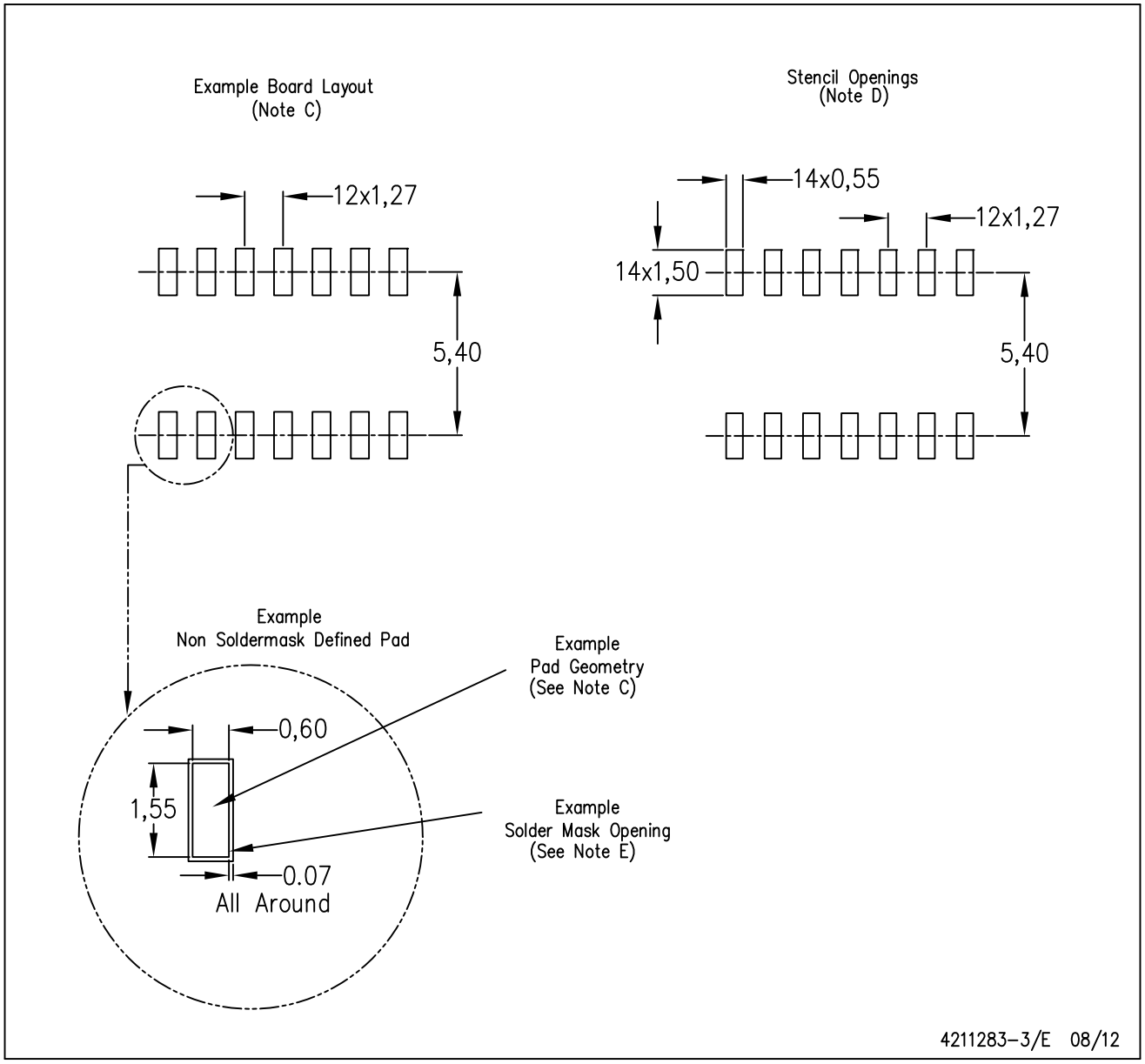

NOTES:
A. All linear dimensions are in millimeters.
B. This drawing is subject to change without notice.
C. Publication IPC–7351 is recommended for alternate designs.
D. Laser cutting apertures with trapezoidal walls and also rounding corners will offer better paste release. Customers should contact their board assembly site for stencil design recommendations. Refer to IPC–7525 for other stencil recommendations.
E. Customers should contact their board fabrication site for solder mask tolerances between and around signal pads.

N (R–PDIP–T**) PLASTIC DUAL–IN–LINE PACKAGE

16 PINS SHOWN

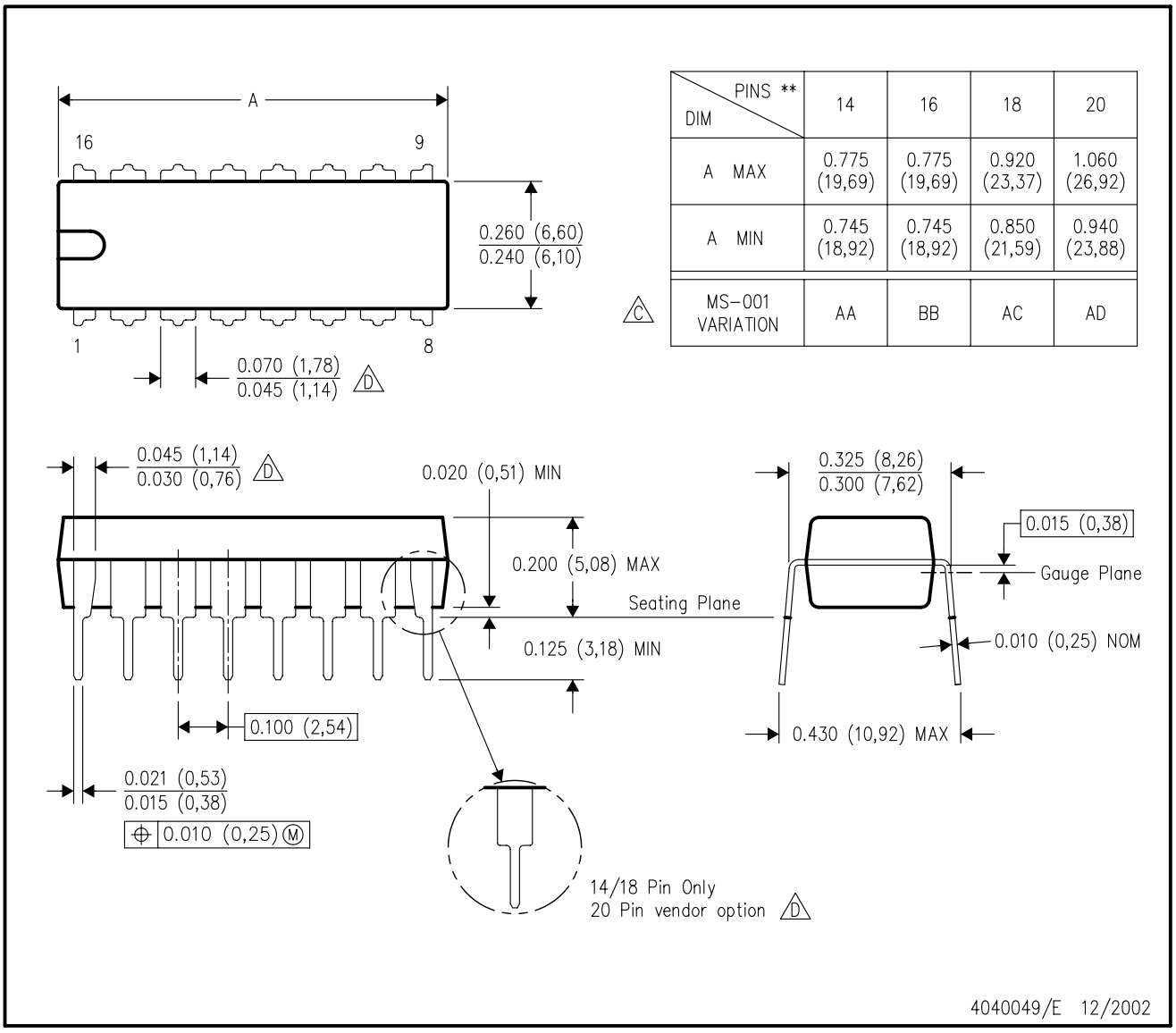

DIM \ PINS **	14	16	18	20
A MAX	0.775 (19,69)	0.775 (19,69)	0.920 (23,37)	1.060 (26,92)
A MIN	0.745 (18,92)	0.745 (18,92)	0.850 (21,59)	0.940 (23,88)
MS–001 VARIATION (C)	AA	BB	AC	AD

NOTES:
A. All linear dimensions are in inches (millimeters).
B. This drawing is subject to change without notice.
C. Falls within JEDEC MS–001, except 18 and 20 pin minimum body length (Dim A).
D. The 20 pin end lead shoulder width is a vendor option, either half or full width.

IMPORTANT NOTICE AND DISCLAIMER

TI PROVIDES TECHNICAL AND RELIABILITY DATA (INCLUDING DATASHEETS), DESIGN RESOURCES (INCLUDING REFERENCE DESIGNS), APPLICATION OR OTHER DESIGN ADVICE, WEB TOOLS, SAFETY INFORMATION, AND OTHER RESOURCES “AS IS” AND WITH ALL FAULTS, AND DISCLAIMS ALL WARRANTIES, EXPRESS AND IMPLIED, INCLUDING WITHOUT LIMITATION ANY IMPLIED WARRANTIES OF MERCHANTABILITY, FITNESS FOR A PARTICULAR PURPOSE OR NON-INFRINGEMENT OF THIRD PARTY INTELLECTUAL PROPERTY RIGHTS.

These resources are intended for skilled developers designing with TI products. You are solely responsible for (1) selecting the appropriate TI products for your application, (2) designing, validating and testing your application, and (3) ensuring your application meets applicable standards, and any other safety, security, or other requirements. These resources are subject to change without notice. TI grants you permission to use these resources only for development of an application that uses the TI products described in the resource. Other reproduction and display of these resources is prohibited. No license is granted to any other TI intellectual property right or to any third party intellectual property right. TI disclaims responsibility for, and you will fully indemnify TI and its representatives against, any claims, damages, costs, losses, and liabilities arising out of your use of these resources.

TI’s products are provided subject to TI’s Terms of Sale (www.ti.com/legal/termsofsale.html) or other applicable terms available either on ti.com or provided in conjunction with such TI products. TI’s provision of these resources does not expand or otherwise alter TI’s applicable warranties or warranty disclaimers for TI products.

Mailing Address: Texas Instruments, Post Office Box 655303, Dallas, Texas 75265
Copyright © 2018, Texas Instruments Incorporated

Looking for pricing, stock, or lifecycle information?

Click below to explore more details on WIN SOURCE:

- View LP339DRG4 on WIN SOURCE
- Texas Instruments Information

Optimize Your Supply Chain with WIN SOURCE Solutions

- Global Sourcing Solution
- Obsolete Management
- Cost Control Management
- Shortage Management
- Alternative Solution
- Excess Inventory Management