THE DATASHEET OF

PTB78520WAS

www.win-source.net 0086-755-83957316

PTB78520W

20-A, 18–60-V Input Auto-Track Compatible Isolated DC/DC Converter

SLTS226A – JULY 2004 – REVISED OCTOBER 2005

Features

- Wide-Input Voltage Range: 18 V to 60 V
- 20 A Total Output Current
- 90% Efficiency
- Wide-Adjust Output Voltage: 1.8 V to 3.6 V
- Over-Current Protection
- Output Over-Voltage Protection
- Over-Temperature Shutdown
- Output Enable Control
- Auto-Track Compatible Sequenced Output
- Smart-Sense Remote Sensing
- Under-voltage Lockout
- Industry Standard Footprint
- Surface Mountable
- 1500 VDC Isolation
- Agency Approvals (Pending): UL/cUL 60950, EN 60950

Description

The PTB78520W is a 20-A rated, wide-input (18-60 V) isolated DC/DC converter that incorporates Auto-Track™ power-up sequencing. This allows these modules to simultaneously power up with any other downstream non-isolated, Auto-Track compliant module.

The PTB78520W module provides two outputs, each regulated to the same voltage. During power up, the voltage at 'V_O Bus' rises first, allowing this output to provide input power to any downstream non-isolated module. The voltage from 'V_O Seq' is then allowed to rise simultaneously, under the control of Auto-Track, along with the outputs from the downstream modules.

Whether used to facilitate power-up sequencing, or operated as a stand-alone module, the PTB78520W includes many features expected of high-performance DC/DC converter modules. The combination of input-output isolation and a wide-input voltage range, allows operation from either +24 V or –48 V. The wide-output adjust enables the output voltage to be set to to any voltage over the range, 1.8 V to 3.6 V, using a single external resistor. Precise output voltage regulation is assured using Smart-Sense. This is a differential remote sense that will intelligently regulate the sequenced output, depending on its sequence status. Other operational features include an input under-voltage lockout (UVLO) and an output enable control. Over-current, over-voltage, and over-temperature protection assures the module's ability to survive any load fault.

Typical applications include distributed power architectures in both telecom and computing environments, particularly complex digital systems requiring power-sequencing of multiple power supply rails.

Pin-Out Information

Pin	Function
1	$+V_{IN}$
2	V_O Enable *
3	$-V_{IN}$
4	Track
5	V_O Com
6	(–) Sense
7	Vo Adjust
8	(+) Sense
9	V_O Bus
10	V_O Seq

Shaded functions indicate signals electrically common with the input.

** Denotes negative logic:*
Low ($-V_{IN}$) = Normal operation
Open = Output off

Auto-Track™ Sequencing

Typical Application

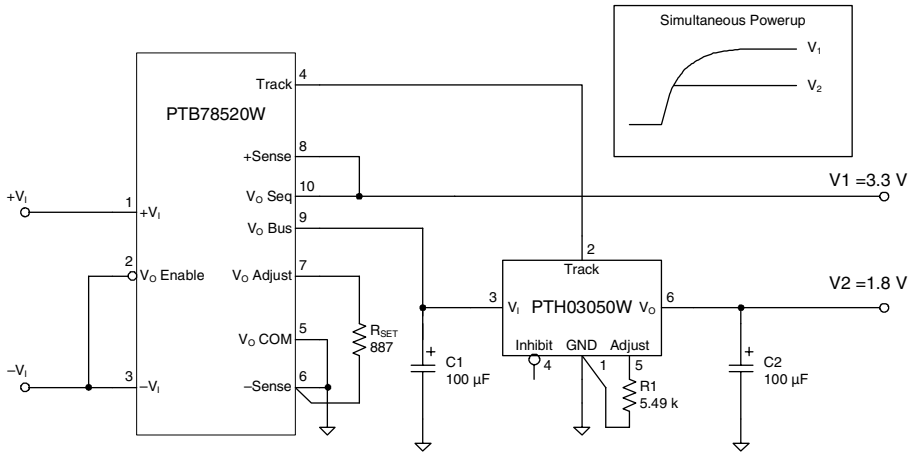

Ordering Information

Output Voltage (PTB78520❐xx)

Code	Voltage
W	1.8 V to 3.6 V

Package Options (PTB78520x❐❐)

Code	Description	Pkg Ref. (1)
AH	Horiz. T/H	(ERP)
AS	SMD, Standard (2)	(ERQ)

Notes: *(1) Reference the applicable package reference drawing for the dimensions and PC board layout*
(2) "Standard" option specifies 63/37, Sn/Pb pin solder material.

Pin Descriptions

$+V_{IN}$: The positive input for the module with respect to $-V_{IN}$. When powering the module from a negative input voltage, this input is connected to the input source ground.

$-V_{IN}$: The negative input supply for the module, and the 0-V reference for the 'V_O Enable' input. When powering the module from a positive source, this input is connected to the input source return.

Vo Enable*: An open-collector (open-drain) negative logic input that is referenced to $-V_{IN}$. This input must be pulled to –Vin potential to enable the output voltage. A high-impedance connection will disable the module output. If the output enable feature is not used, pin 2 should be permanently connected to $-V_{IN}$. The module will then produce an output whenever a valid input source is applied.

Vo Bus: Produces a positive power output with respect to 'V_O COM'. This is the main output from the converter when operated in a stand-alone configuration. It is dc-isolated from the input power pins and is the first output to rise when the converter is either powered or enabled. In power-up sequencing applications, this output can provide a 3.3-V standby source to power the downstream non-isolated modules.

Vo Seq: This is the sequenced output voltage from the converter. This voltage can be directly controlled from the Track pin. During power up, V_O Seq will rise with the Track pin voltage, typically 20 ms after the V_O Bus output has reached regulation.

Vo COM: This is the output power return for both the 'V_O Bus' and 'V_O Seq' output voltages. This node should be connected to the load circuit common.

Track: The voltage at this pin directly controls the voltage at the 'V_O Seq' regulated output. It is primarily used to sequence the voltage at 'V_O Seq' with the regulated outputs from any downstream non-isolated modules that are powered from the converter's '$+V_O$ Bus' output. In these applications, the 'Track' pin is simply connected to the track control of each of the non-isolated modules. The 'Track' pin of the PTB78520W has an internal transistor, which holds it at 'V_O COM' potential for approximately 20 ms after the 'V_O Bus' output is in regulation. Following this delay, the 'Track' voltage and 'V_O Seq' will rise simultaneously with the output voltage from all the non-isolated modules, that are under the control of Auto-Track.

Vo Adjust: A resistor must be connected between this pin and '–Sense' to set the converter's output voltage. A 0.05-W rated resistor may be used, with tolerance and temperature stability of 1% and 100 ppm/°C, respectively. If this pin is left open, the converter output voltage will default to its lowest value. The specification table gives the preferred resistor values for the popular bus voltages.

+Sense: The '+Sense' pin can be connected to either the 'V_O Bus' or 'V_O Seq' outputs. When connected to 'V_O Seq', remote sense compensation will be delayed until the power-up sequence is complete. The voltage at 'V_o Bus' will also be raised slightly. The pin may be left open circuit, but connecting it to one of the output terminals improves load regulation of that output.

–Sense: Provides the converter with a remote sense capability when used in conjunction with +Sense. For optimum output voltage accuracy this pin should always be connected to 'V_O COM'. This pin is also the reference connection for the output voltage set-point resistor.

Environmental & Absolute Maximum Ratings

Characteristics	Symbols	Conditions	Min	Typ	Max	Units
Input Voltage	V_{IN}	Surge (100 ms maximum)	—	—	75	V
Track Input Voltage	V_{TRACK}		0	—	V_O Bus + 0.3	V
Track Input Current	I_{TRACK} (max)	From external source	—	—	10 (i)	mA
Operating Temperature Range	T_A	Over V_{IN} Range	–40	—	+85	°C
Over-Temperature Protection	OTP	PCB temperature (near pin 1)	—	115	—	°C
Solder Reflow Temperature	T_{REFLOW}	Surface temperature of module or pins	—	—	235 (ii)	°C
Storage Temperature	T_S	—	–40	—	+125	°C
Mechanical Shock		Per Mil-STD-883D, Method 2002.3 T/H 1 msec, ½ Sine, mounted SMD	— —	250 150	— —	Gs
Mechanical Vibration		Mil-STD-883D, Method 2007.2 T/H 20-2000 Hz, PCB mounted SMD	— —	15 5	— —	Gs
Weight	—		—	28.5	—	grams
Flammability	—	Meets UL 94V-O				

Notes: *(i) When the Track input is fed from an external voltage source, the input current must be limited. A 2.74-kΩ value series resistor is recommended.*
(ii) During solder reflow of SMD package version, do not elevate the module PCB, pins, or internal component temperatures above a peak of 235 °C.

Specifications (Unless otherwise stated, T_A =25 °C, V_{IN} =24 V, V_O =3.3 V, C_O =0 µF, and I_O =$I_O$max)

Characteristic	Symbol	Conditions	PTB78520W Min	Typ	Max	Units
Output Current	I_O bus I_O seq	Over V_{IN} range	0 0	— —	20 (1) 10 (1)(2)	A
	I_O tot	Sum total I_O bus + I_O seq	0	—	20	A
Input Voltage Range	V_{IN}	Over I_O Range	18	48	60	V
Set Point Voltage Tolerance	V_O tol		—	±0.6 (3)	—	%V_O
Temperature Variation	Reg_{temp}	–40° ≤T_A≤ +85°C	—	±0.8	—	%V_O
Line Regulation	Reg_{line}	Over V_{IN} range	—	±1	—	mV
Load Regulation	Reg_{load}	Over I_O range	—	±1	—	mV
Total Output Voltage Variation	ΔV_Otot	Includes set-point, line, load, –40° ≤T_A≤ +85°C	—	±1.5	±3 (3)	%V_O
Output Voltage Adjust Range	ΔV_{ADJ}	Over V_{in} range	1.8	—	3.6	V
Efficiency	η	I_O =10 A; R_{SET} =887 Ω, V_O =3.3 V R_{SET} =6.98 kΩ, V_O =2.5 V R_{SET} =35.7 kΩ, V_O =2.0 V R_{SET} =open cct. V_O =1.8 V	— — — —	90 88.5 87 86.5	— — — —	%
V_o Ripple (pk-pk)	V_R	20 MHz bandwidth	—	20	—	mV_{pp}
Transient Response	t_{TR}	1 A/µs load step, 50% to 100% $I_O$max	—	75	—	µs
	ΔV_{TR}	V_O over/undershoot	—	±3	—	%V_O
Track Input (pin 4) Input Current	I_{TRACK}	pin connected to V_O COM	—	—	–0.13	mA
Open Circuit Voltage	V_{TRACK}		0	—	V_O Bus	V
Track Slew Rate Capability	dV_{TRACK}/dt		0.1 (4)	—	1	V/ms
Output Enable Input (pin 2) Input High Voltage Input Low Voltage	 V_{IH} V_{IL}	Referenced to –V_{IN} (pin 3)	 2 –0.2	 — —	 open (5) +0.8	V
Input Low Current	I_{IL}		—	–240	—	µA
Standby Input Current	I_{IN} standby	pin 2 open	—	2	—	mA
No-Load Input Current	I_{IN} no-load	pins 2 & 3 connected, Io_{TOT} =0	—	85	—	mA
Over-Current Threshold	I_{TRIP}	Shutdown, followed by auto-recovery	—	30	—	A
Output Over-Voltage Protection	OVP	Output shutdown and latch off	—	125	—	%V_O
Under-Voltage Lockout	UVLO		15.5	17	18	V
Switching Frequency	f_S	Over V_{IN} range	225	275	325	kHz
Internal Input Capacitance	C_{IN}		—	3	—	µF
External Output Capacitance	C_{OUT}	Between +V_o and –V_o	0		5,000	µF
Isolation Voltage Capacitance Resistance		Input-output & input-case Input-output Input-output	1,500 — 10	— 1,000 —	— — —	Vdc pF MΩ
Reliability	MTBF	Telcordia TR-332 50% stress, T_A =40°C, ground benign	1.2	—	—	10^6 Hrs

Notes: *(1) See SOA curves or consult factory for appropriate derating.*
(2) When load current is supplied from the $V_{O\ SEQ}$ output, the module will exhibit higher power dissipation and slightly lower operating efficiency.
(3) The set-point voltage tolerance is affected by the tolerance and stability of R_{SET}. The stated limit is unconditionally met if R_{SET} has a tolerance of 1%, with 100 ppm/°C temperature stability.
(4) When controlling the Track input from an external source the slew rate of the applied signal must be greater than the minimum limit. Failure to allow the voltage to completely rise to the voltage at the Vo Bus output, at no less than the minimum specified rate, may thermally overstress the converter.
(5) The 'V_O Enable' input has an internal pull-up, and if left open the converter output will be turned off. A discrete MOSFET or bipolar transistor is recommended to control this input. The open-circuit voltage is approximately 20% of the input voltage. If the output enable feature is not used, this pin should be permanently connected to –V_{IN}. See application notes for other interface considerations.

Typical Characteristics

Characteristic Data; V_{IN} =24 V (See Note A)

Efficiency vs. Load Current (I_O Bus)

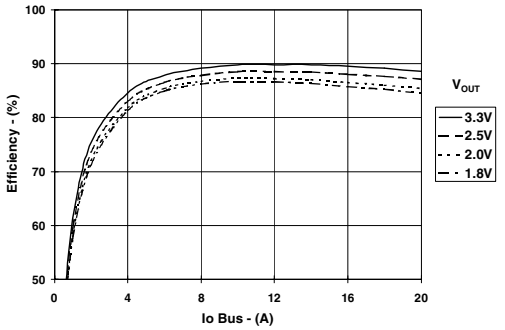

Output Ripple vs. Load Current (I_O Bus)

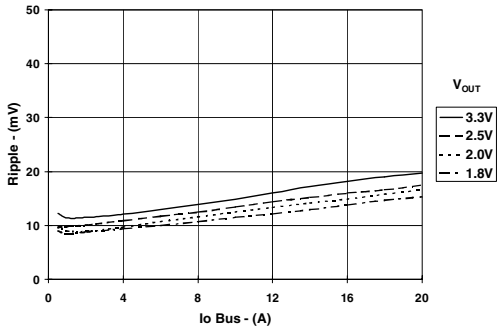

Power Dissipation vs. Load Current (I_O Bus)

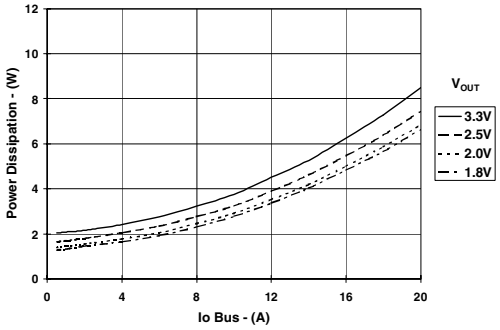

Characteristic Data; V_{IN} =48 V (See Note A)

Efficiency vs. Load Current (I_O Bus)

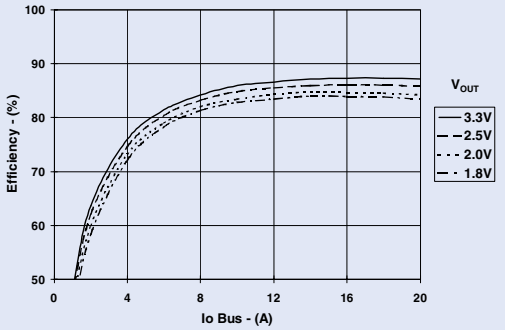

Output Ripple vs. Load Current (I_O Bus)

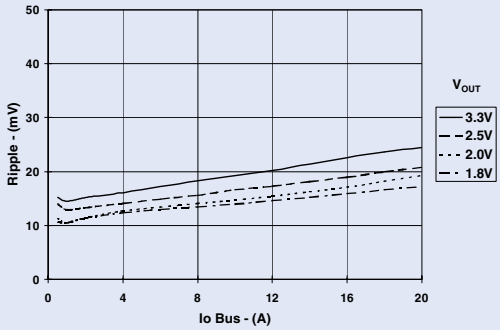

Power Dissipation vs. Load Current (I_O Bus)

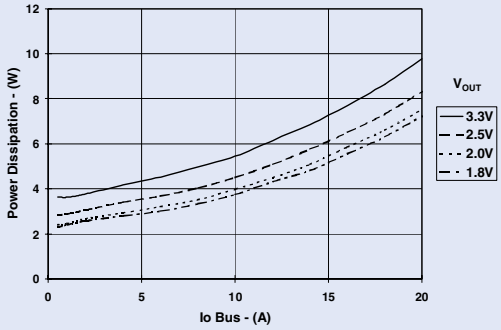

Note A: *All data listed in the above graphs has been developed from actual products tested at 25 °C. This data is considered typical data for the DC-DC Converter.*

Safe Operating Areas; V_{IN} =24 V (See Note B)

Load Current from '+V_O Bus' Output

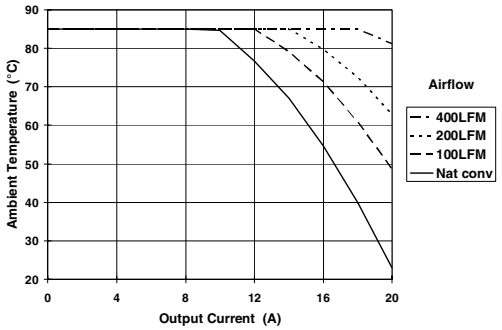

Load Current from '+V_O Seq' Output

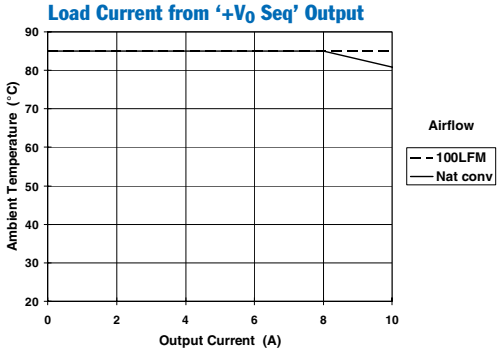

Safe Operating Areas; V_{IN} =48 V (See Note B)

Load Current from 'V_O Bus' Output

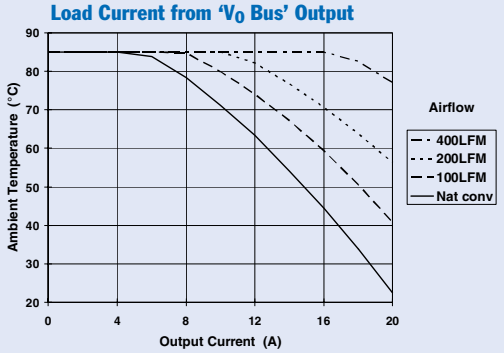

Load Current from 'V_O Seq' Output

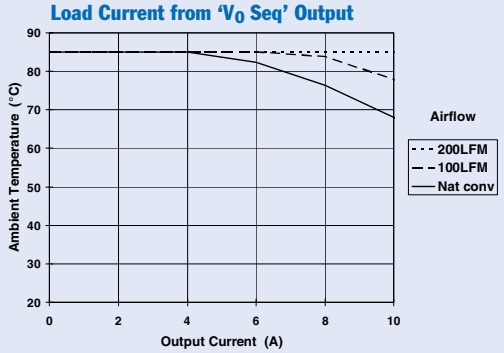

Note B: *SOA curves represent operating conditions at which internal components are at or below manufacturer's maximum rated operating temperature.*

Operating Features and System Considerations for the PTB78520W DC/DC Converter

Over-Current Protection

To protect against load faults these converters incorporate output over-current protection. Applying a load to the output that exceeds the converter's over-current threshold (see applicable specification) will cause the output voltage to momentarily fold back, and then shut down. Following shutdown the module will periodically attempt to automatically recover by initiating a soft-start power-up. This is often described as a "hiccup" mode of operation, whereby the module continues in the cycle of successive shutdown and power up until the load fault is removed. Once the fault is removed, the converter automatically recovers and returns to normal operation.

Output Over-Voltage Protection

The converter continually monitors for an output over-voltage (OV) condition, directly across the '+V_O Bus' output. The OV threshold automatically tracks the output voltage setpoint to a level that is 25% higher than that set by the external R_{SET} voltage adjust resistor. If the output voltage exceeds this threshold, the converter is immediately shut down and remains in a latched-off state. To resume normal operation the converter must be actively reset. This can only be done by momentarily removing the input power to the converter. For failsafe operation and redundancy, the OV protection uses circuitry that is independent of the converter's internal feedback loop.

Differential Output Voltage Sense

A differential remote sense allows a converter's regulation circuitry to compensate for limited amounts of IR drop, that may be incurred between the converter and load, in either the positive or return PCB traces. Connecting the (+)Sense and (–)Sense pins to the respective positive and ground reference of the load terminals will improve the load regulation of the converter's output voltage at that connection point. The (–)Sense pin should always be connected to the 'V_O COM'. The (+)Sense pin may be connected to either the '+V_O Bus' or '+V_O Seq' outputs.

When the (+)Sense pin is connected to the 'V_O Seq' output, the voltage at 'V_o Bus' voltage will regulate slightly higher. Depending on the load conditions on the 'V_O Seq' output, the voltage at 'V_O Bus' may be up to 100 mV higher than the converter's set-point voltage. In addition, the Smart-Sense feature (incorporated into the PTB78520 converter) will only engage sense compensation to the 'V_O Seq' output when that output voltage is close to the set-point. During other conditions, such as power-up and power-down sequencing events, the sense circuit automatically defaults to sensing the 'V_O Bus' voltage, internal to the converter.

Leaving the (+)Sense and (–)Sense pins open will not damage the converter or load circuitry. The converter includes default circuitry that keeps the output voltage in regulation. If the remote sense feature is not used, the (–)Sense pin should always be connected to 'Vo COM'.

Note: The remote sense feature is not designed to compensate for the forward drop of non-linear or frequency dependent components that may be placed in series with the converter output. Examples include OR-ing diodes, filter inductors, ferrite beads, and fuses. When these components are enclosed by the sense pin connections they are effectively placed inside the regulation control loop, which can adversely affect the stability of the converter.

Over-Temperature Protection

Over-temperature protection is provided by an internal temperature sensor, which monitors the temperature of the converter's PCB (close to pin 1). If the PCB temperature exceeds a nominal 115 °C, the converter will shut down. The converter will then automatically restart when the sensed temperature drops back to approximately 105 °C. When operated outside its recommended thermal derating envelope (see data sheet SOA curves), the converter will typcially cycle on and off at intervals from a few seconds to one or two minutes. This is to ensure that the internal components are not permanently damaged from excessive thermal stress.

Under-Voltage Lockout

The Under-Voltage Lock-Out (UVLO) is designed to prevent the operation of the converter until the input voltage is close to the minimum operating voltage. The converter is held off when the input voltage is below the UVLO threshold, and turns on when the input voltage rises above the threshold. This prevents high start-up current during normal power-up of the converter, and minimizes the current drain from the input source during low input voltage conditions. The converter will meet full specifications when the minimum specified input voltage is reached. The UVLO circuitry also overrides the operation of the *Vo Enable* control. Only when the input voltage is above the UVLO threshold will the *Vo Enable* control be functional.

Primary-Secondary Isolation

These converters incorporate electrical isolation between the input terminals (primary) and the output terminals (secondary). All converters are tested to a withstand voltage of 1500 VDC. This complies with UL/cUL 60950 and EN 60950 and the requirements for operational isolation. It allows the converter to be configured for either a positive or negative input voltage source. The data sheet 'Pin Descriptions' section provides guidance as to the correct reference that must be used for the external control signals.

Output Voltage Adjustment

The 'V_O Adjust' control sets the output voltages to a value higher than 1.8 V. For output voltages other than 1.8 V a single external resistor, R_{SET}, must be connected directly between the 'V_O Adjust' (pin 7) and '(–)Sense' (pin 6) pins. A 0.05-W rated resistor can be used. The tolerance should be 1%, with a temperature stability of 100 ppm/°C (or better). Place the resistor close to the converter and connect it directly between pins 7 & 6 using dedicated PCB traces (see typical application). Table 1-1 gives the preferred value of the external resistor for a number of standard voltages, along with the actual output voltage that this resistance value provides.

For other output voltages the value of the required adjust resistor may be calculated using the following formula.

$$R_{SET} = 6.49\ k\Omega \cdot \frac{1.225\ V}{V_{SET} - 1.805\ V} - 4.42\ k\Omega$$

Table 1-1; Preferred Values of R_{SET} for Standard Output Voltages

V_{SET} (Standard)	R_{SET} (Pref'd Value)	V_{SET} (Actual)
3.6 V	0 Ω	3.604V
3.3 V	887 Ω	3.303 V
2.5 V	6.98 kΩ	2.503 V
2.0 V	35.7 kΩ	2.003 V
1.8 V	Open	1.805 V

Input Current Limiting

The converter is not internally fused. For safety and overall system protection, the maximum input current to the converter must be limited. Active or passive current limiting can be used. Passive current limiting can be a fast acting fuse. A 125-V fuse, rated no more than 10 A, is recommended. Active current limiting can be implemented with a current limited "Hot-Swap" controller.

Thermal Considerations

Airflow may be necessary to ensure that the module can supply the desired load current in environments with elevated ambient temperatures. The required airflow rate may be determined from the Safe Operating Area (SOA) thermal derating chart (see converter specifications).

Using the Output Enable Control on the PTB78520 Auto-Track Compatible DC/DC Converter

The 'V_O Enable' (pin 2) control is an active low input that allows the output voltage from the converter to be turned on and off while it is connected to the input source. The 'V_O Enable' input is referenced to the $-V_{IN}$ (pin 3) [1], on the primary side of the converter's isolation, and has its own internal pull up. The open-circuit voltage is approximately 20% of the applied input source voltage.

For the converter to function normally pin 2 must be pulled low to $-V_{IN}$ potential [2]. The converter output will then produce a regulated voltage whenever a valid source voltage is applied between $+V_{IN}$ (pin 1) and $-V_{IN}$ (pin 3) [3]. If the voltage at pin 2 is allowed to rise above V_{IH}(min), (see specification table), the output from the converter will be turned off.

Figure 1-1 is an application schematic that shows the typical use of the *Output Enable* function. Note the discrete transistor (Q_1). Either a discrete MOSFET or bipolar transistor is recommended to control this input. Table 1-1 gives the threshold requirements.

When placed in the "Off" state the output will neither source or sink output current. The load voltage will then decay as the output capacitance is discharged by the load circuit. With the output turned off, the current drawn from the input source is typically reduced to 2 mA.

Table 1-1; Output Enable Control Requirements [1]

Parameter	Min	Typ	Max
Enable (V_{IH})	2 V	—	—
Disable (V_{IL})	—	—	0.8 V
$V_{O/C}$ [Open-Circuit]	—	—	13.5 V
I_{IN} [pin 1 at $-V_{IN}$]	—	—	–0.6 mA

Notes:

1. The *Output Enable* control uses $-V_{IN}$ (pin 3) as its ground reference. All voltages are with respect to $-V_{IN}$.
2. Use an open-collector (or open-drain) discrete transistor to control the *Output Enable* input. A pull-up resistor is not necessary. To disable the converter the control pin should be pulled low to less than +0.8 V. If the Output Enable feature is not used, pin 2 should be permanently connected to $-V_{IN}$ (pin 3).
3. The converter incorporates an "Under-Voltage Lockout" (UVLO). The UVLO does not allow the converter to power up until the input voltage is close to its minimum specified operating voltage. This is regardless of the state of the *Output Enable* control. Consult the specifications for the UVLO thresholds.

Figure 1-1; Output Enable Operation

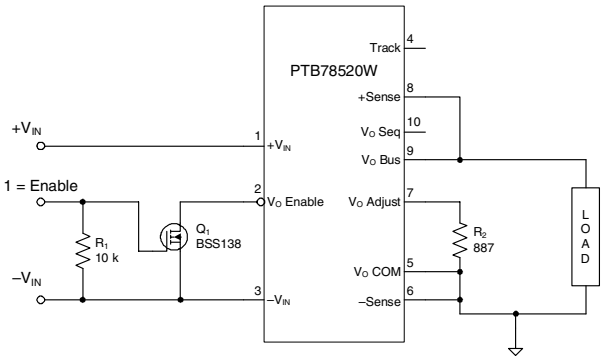

Turn-On Time: In the circuit of Figure 1-1, turning Q_1 off allows the voltage at pin 2 to rise to its internal pull-up voltage. This disables the converter output. When Q_1 is then turned on, it applies a low-level voltage to pin 2, and enables the output of the converter. The converter produces a regulated output voltage within 50 ms. Figure 1-2 shows the output response of a PTB78520W after Q_1 is turned on. The turn on of Q_1 corresponds to the drop in the Q_1 Vds waveform. Although the output voltage rise-time is short (<10 ms), the indicated delay time (t_d) will vary depending upon the input voltage and the module's internal timing. The output voltage of the PTB78520W was set to 3.3 V. The waveforms were measured with 24-Vdc input voltage, and a 10 A resistive load.

Figure 1-2; Output Enable Power-Up Characteristic

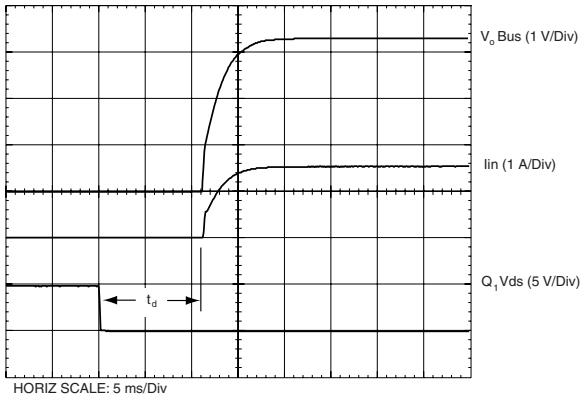

Configuring the PTB78520 DC/DC Converter to Power-Up Sequence with POL Modules

Overview

The PTB78520 DC/DC converter has two outputs, 'V_O Seq' and 'V_O Bus'. 'V_O Bus' is the main output from the converter. 'V_O Seq' is an output that is derived from 'V_O Bus' and can be sequenced with other supply voltages during power-up. Both outputs are regulated to the same set-point voltage, except that the rise in the 'V_O Seq' output is controlled by a pin called 'Track', and delayed during power-up events. This delay allows the PTB78520W to both power and sequence with one or more non-isolated, 3.3-V input, Auto-Track compatible modules [1]. In these applications, the PTB78520W incorporates the necessary timing to coordinate the rise of all sequenced outputs using a common track control signal. The hold-off delay time also complies with the power-up requirements of the downstream non-isolated modules, without the need for additional components.

PTB78520W Auto-Track Features

Figure 2-1 shows a block diagram of the PTB78520W Auto-Track features. During power up, 'V_O Bus' (pin 9) rises promptly, whenever the converter is connected to a valid input source and its output is enabled. 'V_O Seq' (pin 10) is the Auto-Track compatible output that is derived from 'V_O Bus' but directly controlled by the voltage presented at the Track input (pin 4). The control relationship is on a volt-for-volt basis, and is active from 0 V up to a voltage just below the 'V_O Bus' output. Between these two limits, the voltage at 'V_O Seq' will follow that at the 'Track' input. However, once the Track input is at the 'V_O Bus' voltage, raising it higher has no further effect. The voltage at 'V_O Seq' cannot go higher than 'V_O Bus', and if it is connected to '+Sense' (pin 8), it will then regulate at the set-point voltage. [2]

The control relationship between 'V_O Seq' and the Track input is the same as other Auto-Track compatible outputs, across all module types. By connecting the Track input of the PTB78520W to the Track input of other Auto-Track compatible modules, the output voltages can be made to follow a common signal during power-up transitions. [3] Each Track input produces a suitable track control signal from an internal R-C time constant. An input signal can also be provided from an externally generated ramp waveform. [4, 5]

The Track input of the PTB78520W has a pull-up resistor to 'V_O Bus', and a capacitor to 'V_O COM'. This enables its Track input to rise automatically; once it is allowed to do so. In sequencing applications, the non-isolated modules are powered by the 'V_O Bus' output. A MOSFET, internal to the PTB78520W, holds the Track voltage (and the 'V_O Seq' output) at ground for 20 ms after the 'V_O Bus' output is in regulation. This gives the non-isolated modules time to initialize so that their outputs can rise with the 'V_O Seq' output.

Figure 2-1; Block Diagram of PTB78520 Auto-Track Features

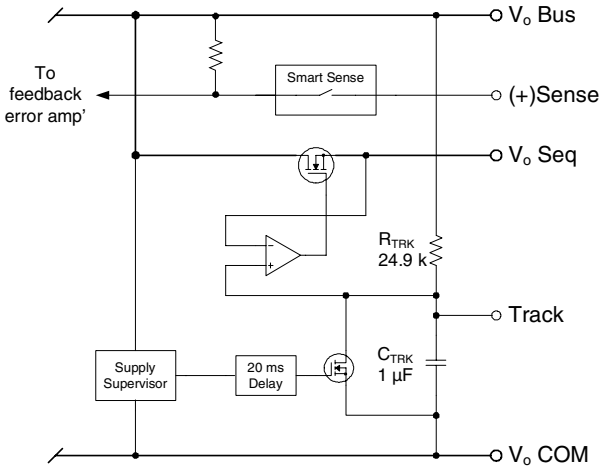

Notes:

1. Auto-Track compatible modules incorporate a Track input that can take direct control of the output voltage during power-up transistions. The control relationship is on a volt-for-volt basis and is active between the 0 V and the module's set-point voltage. When the Track input is above the set-point voltage, the module remains at its set point. Connecting the Track input of a number of such modules together allows their outputs to follow a common track control voltage during power-up.
2. When '+Sense' (pin 8) is connected to the 'V_O Seq' output (pin 10), the 'Vo Seq' output will be tightly regulated to the PTB78520W's set-point voltage. In this configuration, the voltage at the 'V_O Bus' output (pin 9) will be up to 100 mV higher.
3. The 'V_O Seq' output cannot sink load current. This constraint does not allow the PTB78520W to coordinate a sequenced power down.
4. The slew rate for the Track input signal must be between 0.1 V/ms and 1 V/ms. Above this range the 'V_O Seq' output may no longer accurately follow the Track input voltage. A slew rate below this range may thermally stress the converter. These slew rate limits are met whenever the Track input voltage is allowed to rise, using the internal R-C time constants at the Track input of all modules being sequenced.
5. Whenever an external voltage is used to control the Track input, the source current **must** be limited. A resistance value of 2.74-kΩ is recommended for this purpose. This is necessary to protect the internal transistor to the PTB78520W converter's Track control input. This transistor holds the track control voltage at ground potential for 20 ms after the 'V_O Bus' output is in regulation.

Typical Power-Up Sequencing Configuration

Figure 2-2 shows how the PTB78520W (U_1) can be configured to provide two 3.3 V sources, that allow it to both power and sequence with one or more non-isolated POL modules. The example shows two PTH03050W modules (U_2 & U_3), each rated for up 6 A of output current. Additional voltages, as well as modules with a higher output current capability can also be specified to meet a specific application. The number of downstream modules, their respective output voltage and load current rating is only limited by the amount of current available at the 'V_O Bus' output. This is 20 A, less the current allocated to the load circuit via the 'V_O Seq' output.

The output voltage adjust range of the PTB78520W is 1.8 V to 3.6 V, which is compatible with the 3.3-V input non-isolated POL modules. In these applications, the PTB78520W output voltage must always be set to 3.3 V (R_1 =887Ω). Note that this sets the output voltage of both the 'V_O Bus' and 'V_O Seq' outputs. The 3.3-V input non-isolated modules, U_2 and U_3, can be set to any voltage over the range, 0.8 V to 2.5 V. In this example they are set to 2.5 V (R_2 =2.21 kΩ) and 1.8 V (R_3 =5.49 kΩ) respectively. Figure 2-3 shows the power-up waveforms from Figure 2-2 when the Track control input to all three modules are simply connected together.

The PTB78520W provides input power to the downstream non-isolated modules via the 'V_o Bus' output. This is the output that rises first to allow the downstream modules to complete their power-up initialization. 'V_O Seq' (3.3 V), and the outputs $V_{POL}1$ (2.5 V) and $V_{POL}2$ (1.8 V), supply the load circuit. These three outputs are controlled by the track control voltage, which the PTB78520W holds at ground potential for 20 ms after the 'V_O Bus' output is in regulation. When the track control voltage is finally allowed to rise, the three outputs rise simultaneously to their respective set-point voltages.

Figure 2-3; PTB78520 Power-Up Waveforms with POL Modules

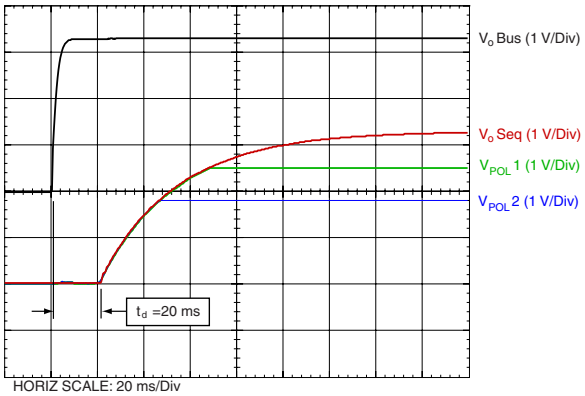

Figure 2-2; Power-Up Sequencing Circuit With PTB78520W & Non-Isolated POL Modules

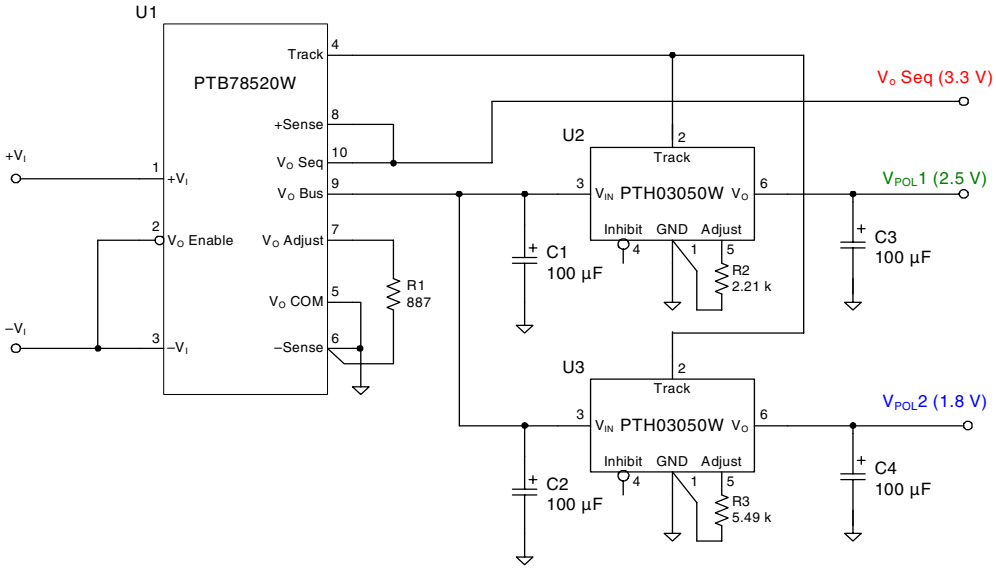

Not Recommended for New Designs

Stand-Alone Operation

The combination of a wide-input and wide-output voltage range makes the PTB78520W an attractive product as a stand-alone DC/DC converter. In these applications the PTB78520W is not required to power up, or sequence with, any non-isolated POL modules. The output voltage can be adjusted to any value over the range, 1.8 V to 3.6 V, and the Auto-Track features simply disregarded.

Figure 2-4 shows the the recommended configuration of the PTB78520W when it is used as a stand-alone converter. As a sequenced output voltage is not required, the main output, 'V_O Bus', is used to supply all the load current. The 'Track' pin, and 'V_O Seq' output are simply left open circuit. The '(+)Sense' pin can also be connected to the 'V_O Bus' output for improved load regulation.

When the PTB78520W is operated in this mode, the output from 'V_O Bus' rises promptly upon power up. The converter also exhibits slightly less power dissipation and a corresponding improvment in operating efficiency.

Figure 2-4; PTB78520W Stand-Alone Configuration

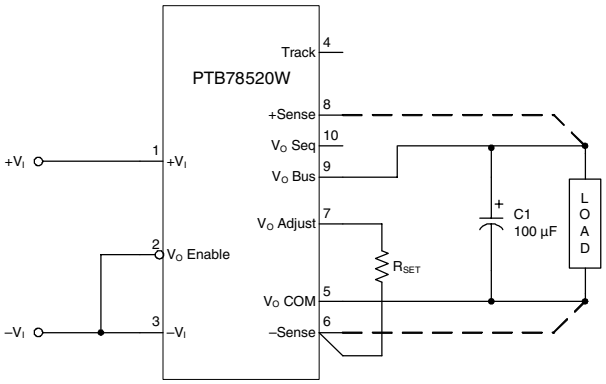

PACKAGING INFORMATION

Orderable Device	Status (1)	Package Type	Package Drawing	Pins	Package Qty	Eco Plan (2)	Lead/Ball Finish (6)	MSL Peak Temp (3)	Op Temp (°C)	Device Marking (4/5)	Samples
PTB78520WAD	NRND	Through-Hole Module	ERP	10	9	RoHS (In Work) & non-Green	SN	N / A for Pkg Type			
PTB78520WAH	NRND	Through-Hole Module	ERP	10	9	RoHS (In Work) & non-Green	SN	N / A for Pkg Type	-40 to 85		
PTB78520WAS	NRND	Surface Mount Module	ERQ	10	9	Non-RoHS & non-Green	SNPB	Level-1-235C-UNLIM/ Level-3-260C-168HRS	-40 to 85		

(1) The marketing status values are defined as follows:
ACTIVE: Product device recommended for new designs.
LIFEBUY: TI has announced that the device will be discontinued, and a lifetime-buy period is in effect.
NRND: Not recommended for new designs. Device is in production to support existing customers, but TI does not recommend using this part in a new design.
PREVIEW: Device has been announced but is not in production. Samples may or may not be available.
OBSOLETE: TI has discontinued the production of the device.

(2) **RoHS:** TI defines "RoHS" to mean semiconductor products that are compliant with the current EU RoHS requirements for all 10 RoHS substances, including the requirement that RoHS substance do not exceed 0.1% by weight in homogeneous materials. Where designed to be soldered at high temperatures, "RoHS" products are suitable for use in specified lead-free processes. TI may reference these types of products as "Pb-Free".
RoHS Exempt: TI defines "RoHS Exempt" to mean products that contain lead but are compliant with EU RoHS pursuant to a specific EU RoHS exemption.
Green: TI defines "Green" to mean the content of Chlorine (Cl) and Bromine (Br) based flame retardants meet JS709B low halogen requirements of <=1000ppm threshold. Antimony trioxide based flame retardants must also meet the <=1000ppm threshold requirement.

(3) MSL, Peak Temp. - The Moisture Sensitivity Level rating according to the JEDEC industry standard classifications, and peak solder temperature.

(4) There may be additional marking, which relates to the logo, the lot trace code information, or the environmental category on the device.

(5) Multiple Device Markings will be inside parentheses. Only one Device Marking contained in parentheses and separated by a "~" will appear on a device. If a line is indented then it is a continuation of the previous line and the two combined represent the entire Device Marking for that device.

(6) Lead/Ball Finish - Orderable Devices may have multiple material finish options. Finish options are separated by a vertical ruled line. Lead/Ball Finish values may wrap to two lines if the finish value exceeds the maximum column width.

Important Information and Disclaimer: The information provided on this page represents TI's knowledge and belief as of the date that it is provided. TI bases its knowledge and belief on information provided by third parties, and makes no representation or warranty as to the accuracy of such information. Efforts are underway to better integrate information from third parties. TI has taken and continues to take reasonable steps to provide representative and accurate information but may not have conducted destructive testing or chemical analysis on incoming materials and chemicals. TI and TI suppliers consider certain information to be proprietary, and thus CAS numbers and other limited information may not be available for release.

In no event shall TI's liability arising out of such information exceed the total purchase price of the TI part(s) at issue in this document sold by TI to Customer on an annual basis.

ERP (R–PDSS–T10) DOUBLE SIDED MODULE

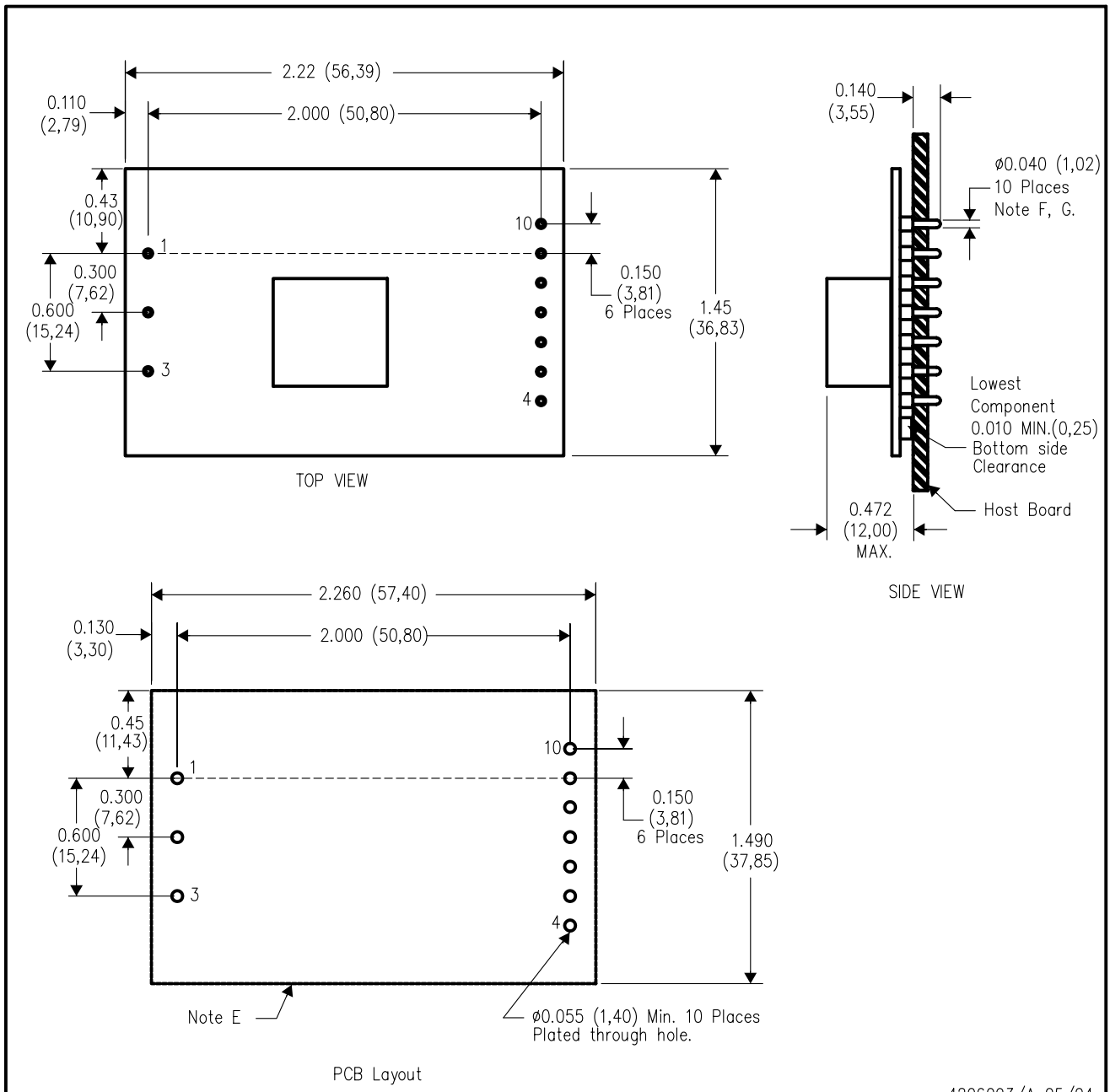

NOTES:
- A. All linear dimensions are in inches (mm).
- B. This drawing is subject to change without notice.
- C. 2 place decimals are ±0.020 (±0,51mm).
- D. 3 place decimals are ±0.010 (±0,25mm).
- E. Recommended keep out area for user components.
- F. Pins are 0.040" (1,02) diameter with 0.070" (1,78) diameter standoff shoulder.
- G. All pins: Material – Copper Alloy
  Finish – Tin (100%) over Nickel plate

ERQ (R–PDSS–T10) DOUBLE SIDED MODULE

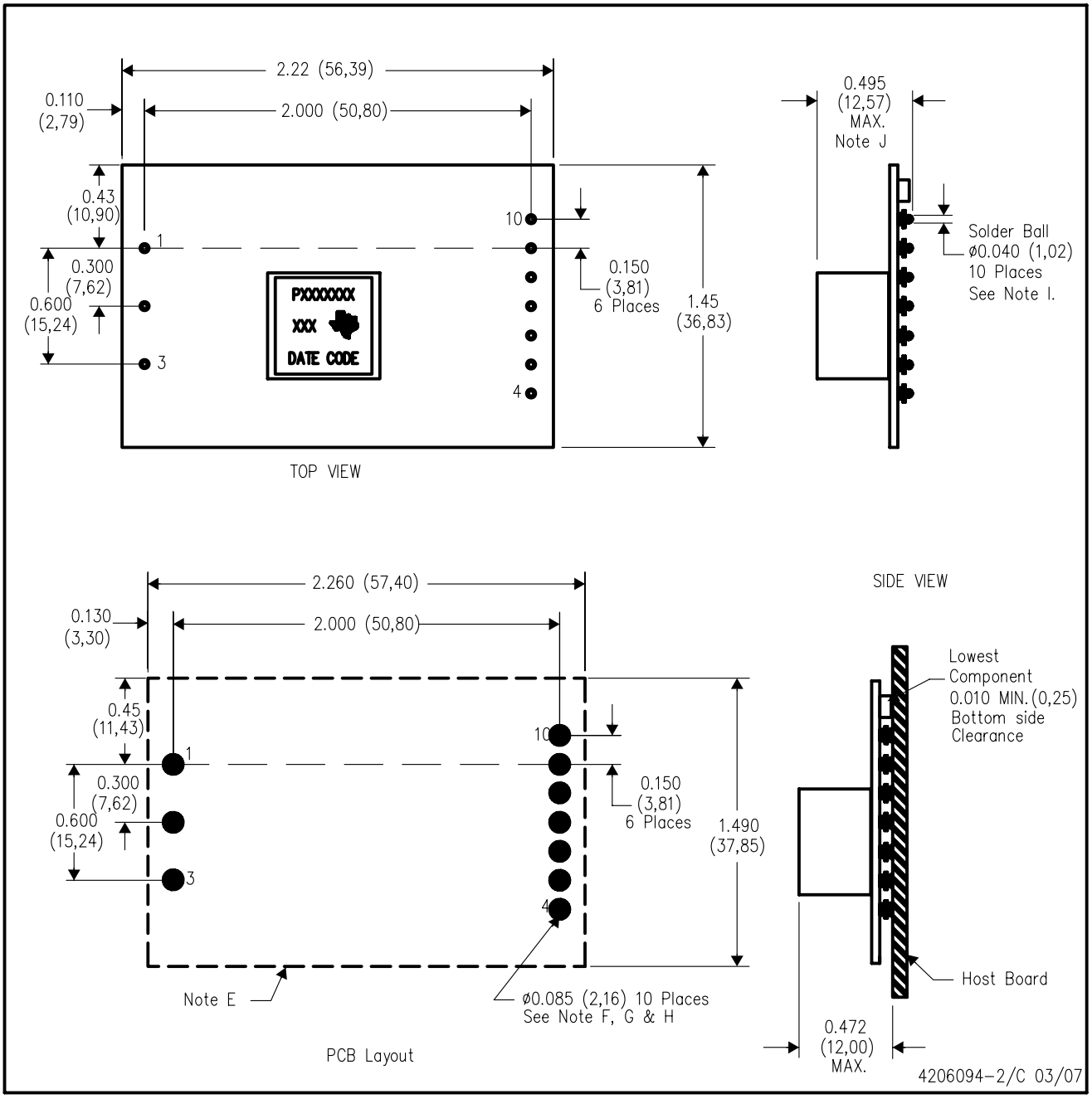

NOTES:
- A. All linear dimensions are in inches (mm).
- B. This drawing is subject to change without notice.
- C. 2 place decimals are ±0.020 (±0,51mm).
- D. 3 place decimals are ±0.010 (±0,25mm).
- E. Recommended keep out area for user components.
- F. Power pin connection should utilize four or more vias to the interior power plane of 0.025 (0,63) I.D. per input, ground and output pin (or the electrical equivalent).
- G. Paste screen opening: 0.080 (2,03) to 0.085 (2,16). Paste screen thickness: 0.006 (0,15).
- H. Pad type: Solder mask defined.
- I. All pins: Material – Copper Alloy
  Finish – Tin (100%) over Nickel plate
  Solder Ball – See product data sheet.
- J. Dimension prior to reflow solder.

IMPORTANT NOTICE AND DISCLAIMER

TI PROVIDES TECHNICAL AND RELIABILITY DATA (INCLUDING DATASHEETS), DESIGN RESOURCES (INCLUDING REFERENCE DESIGNS), APPLICATION OR OTHER DESIGN ADVICE, WEB TOOLS, SAFETY INFORMATION, AND OTHER RESOURCES “AS IS” AND WITH ALL FAULTS, AND DISCLAIMS ALL WARRANTIES, EXPRESS AND IMPLIED, INCLUDING WITHOUT LIMITATION ANY IMPLIED WARRANTIES OF MERCHANTABILITY, FITNESS FOR A PARTICULAR PURPOSE OR NON-INFRINGEMENT OF THIRD PARTY INTELLECTUAL PROPERTY RIGHTS.

These resources are intended for skilled developers designing with TI products. You are solely responsible for (1) selecting the appropriate TI products for your application, (2) designing, validating and testing your application, and (3) ensuring your application meets applicable standards, and any other safety, security, or other requirements. These resources are subject to change without notice. TI grants you permission to use these resources only for development of an application that uses the TI products described in the resource. Other reproduction and display of these resources is prohibited. No license is granted to any other TI intellectual property right or to any third party intellectual property right. TI disclaims responsibility for, and you will fully indemnify TI and its representatives against, any claims, damages, costs, losses, and liabilities arising out of your use of these resources.

TI’s products are provided subject to TI’s Terms of Sale (www.ti.com/legal/termsofsale.html) or other applicable terms available either on ti.com or provided in conjunction with such TI products. TI’s provision of these resources does not expand or otherwise alter TI’s applicable warranties or warranty disclaimers for TI products.

Mailing Address: Texas Instruments, Post Office Box 655303, Dallas, Texas 75265
Copyright © 2019, Texas Instruments Incorporated

Looking for pricing, stock, or lifecycle information?

Click below to explore more details on WIN SOURCE:

- View PTB78520WAS on WIN SOURCE
- Texas Instruments Information

Optimize Your Supply Chain with WIN SOURCE Solutions

- Global Sourcing Solution
- Obsolete Management
- Cost Control Management
- Shortage Management
- Alternative Solution
- Excess Inventory Management