THE DATASHEET OF

MAX4729EXT+T

www.win-source.net 0086-755-83957316

MAX4729/MAX4730

Low-Voltage 3.5Ω, SPDT, CMOS Analog Switches

General Description

The MAX4729/MAX4730 single-pole/double-throw (SPDT) switches operate from a single supply ranging from +1.8V to +5.5V. These switches provide low 3.5Ω on-resistance (R_{ON}), as well as 0.45Ω R_{ON} flatness with a +2.7V supply. These devices typically consume only 1nA of supply current, making them ideal for use in low-power, portable applications. The MAX4729/MAX4730 feature low-leakage currents over the extended temperature range, TTL/CMOS-compatible digital logic, and excellent AC characteristics.

The MAX4729/MAX4730 are available in small 6-pin SC70 and 6-pin µDFN packages. The MAX4729/MAX4730 are offered in three pinout configurations to ease design. The MAX4729/MAX4730 are specified over the extended -40°C to +85°C temperature range.

Features

- **Low 3.5Ω R_{ON} (+2.7V Supply)**
- **0.45Ω R_{ON} Flatness (+2.7V Supply)**
- **0.05Ω R_{ON} Match Between Channels (+2.7V Supply)**
- **Tiny SC70 and µDFN Packages**
- **-3dB Bandwidth: 300MHz**
- **Low On-Capacitance: 19.5pF**
- **0.036% Total Harmonic Distortion**
- **Low Supply Current: 1nA**
- **+1.8V to +5.5V Single-Supply Operation**

Applications

Battery-Operated Equipment

Audio and Video-Signal Routing

Low-Voltage Data-Acquisition Systems

Sample-and-Hold Circuits

Communications Circuits

Relay Replacement

Pin Configurations/Functional Diagrams/Truth Table

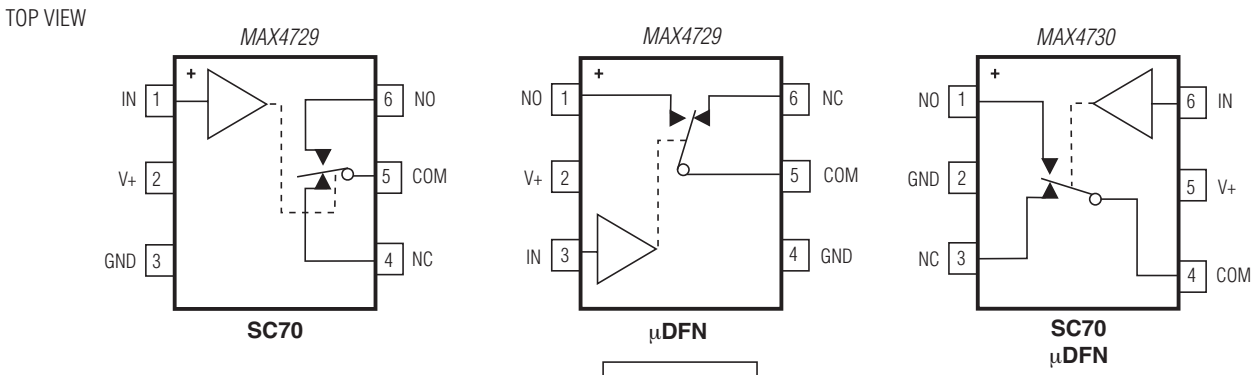

MAX4729/ MAX4730		
IN	**NC**	**NO**
0	ON	OFF
1	OFF	ON

SWITCHES SHOWN FOR LOGIC 0 INPUT.

For pricing, delivery, and ordering information, please contact Maxim Direct at 1-888-629-4642, or visit Maxim Integrated's website at www.maximintegrated.com.

19-3284; Rev 2; 6/14

ABSOLUTE MAXIMUM RATINGS

(All voltages referenced to ground.)
V+, IN .....-0.3V to +6V
COM, NO, NC (Note 1).....-0.3V to (V+ +0.3V)
Continuous Current (IN, V+, GND) .....±30mA
Continuous Current (COM, NO, NC) .....±80mA
Peak Current COM, NO, NC
(Pulsed at 1ms, 10% Duty Cycle).....±150mA

Continuous Power Dissipation (T_A = +70°C)
μDFN (derate 2.1mW/°C above +70°C).....168mW
SC70 (derate 3.1mW/°C above +70°C) 245mW
Operating Temperature Range .....-40°C to +85°C
Maximum Junction Temperature .....+150°C
Storage Temperature Range .....-65°C to +150°C
Lead Temperature (soldering, 10s) .....+300°C
Soldering Temperature (reflow) .....+260°C

Note 1: Signals on NO, NC, or COM exceeding V+ or GND are clamped by internal diodes. Signals on IN exceeding GND are clamped by an internal diode. Limit forward-diode current to maximum current rating.

Stresses beyond those listed under "Absolute Maximum Ratings" may cause permanent damage to the device. These are stress ratings only, and functional operation of the device at these or any other conditions beyond those indicated in the operational sections of the specifications is not implied. Exposure to absolute maximum rating conditions for extended periods may affect device reliability.

ELECTRICAL CHARACTERISTICS

(V+ = +2.7V to +3.6V, V_{IH} = +2.0V, V_{IL} = +0.4V, T_A = -40°C to +85°C, unless otherwise noted. Typical values are at T_A = +25°C.) (Note 2)

PARAMETER	SYMBOL	CONDITIONS		MIN	TYP	MAX	UNITS
ANALOG SWITCH							
Analog Signal Range	V_{COM}, V_{NO}, V_{NC}			0		V+	V
On-Resistance (Note 6)	R_{ON}	V+ = 2.7V, I_{COM} = 10mA, V_{NO} or V_{NC} = 0V to V+	T_A = +25°C		3.5	5.5	Ω
			T_A = -40°C to +85			5.7	
On-Resistance Match Between Channels (Notes 3, 6)	ΔR_{ON}	V+ = 2.7V, I_{COM} = 10mA, V_{NO} or V_{NC} = 0.7V, 1.2V, 2V (MAX4729)	T_A = +25°C		0.05	0.15	Ω
			T_A = -40°C to +85			0.2	
		V+ = 2.7V, I_{COM} = 10mA, V_{NO} or V_{NC} = 0.7V, 1.2V, 2V (MAX4730)	T_A = +25°C		0.2	0.34	
			T_A = -40°C to +85			0.37	
On-Resistance Flatness (Note 4)	$R_{FLAT(ON)}$	V+ = 2.7V, I_{COM} = 10mA, V_{NO} or V_{NC} = 0.7V, 1.2V, 2V (MAX4729)	T_A = +25°C		0.8	1.5	Ω
			T_A = -40°C to +85			2.2	
		V+ = 2.7V, I_{COM} = 10mA, V_{NO} or V_{NC} = 0.7V, 1.2V, 2V (MAX4730)	T_A = +25°C		0.45	0.95	
			T_A = -40°C to +85			1.3	
NO, NC Off-Leakage Current	$I_{NO\ (OFF)}$, $I_{NC\ (OFF)}$	V+ = 3.3V, V_{COM} = 1V, 3V, V_{NO} or V_{NC} = 3V, 1V	T_A = +25°C	-2	+0.01	+2	nA
			T_A = -40°C to +85	-3		+3	
COM On-Leakage Current	$I_{COM\ (ON)}$	V+ = 3.3V, V_{COM} = 1V or 3V, V_{NO} or V_{NC} = 1V, 3V, or float	T_A = +25°C	-3	+0.01	+3	nA
			T_A = -40°C to +85	-4		+4	
DIGITAL INPUTS							
Input Logic High	V_{IH}		T_A = -40°C to +85	2.0			V
Input Logic Low	V_{IL}		T_A = -40°C to +85			0.4	V
Input Leakage Current	I_{IN}	V_{IN} = 0V or 3.6V	T_A = -40°C to +85	-1	+0.005	+1	μA

ELECTRICAL CHARACTERISTICS (continued)

($V+$ = +2.7V to +3.6V, V_{IH} = +2.0V, V_{IL} = +0.4V, T_A = -40°C to +85°C, unless otherwise noted. Typical values are at T_A = +25°C.) (Note 2)

PARAMETER	SYMBOL	CONDITIONS	T_A	MIN	TYP	MAX	UNITS
DYNAMIC							
Turn-On Time (Note 5)	t_{ON}	V_{NO}, V_{NC} = 2V, R_L = 300Ω, C_L = 35pF, Figure 1	T_A = +25°C		18	45	ns
			T_A = -40°C to +85			45	
Turn-Off Time (Note 5)	t_{OFF}	V_{NO}, V_{NC} = 2V, R_L = 300Ω, C_L = 35pF, Figure 1	T_A = +25°C		10	26	ns
			T_A = -40°C to +85			26	
Break-Before-Make (Note 5)		V_{NO}, V_{NC} = 2V, R_L = 300Ω, C_L = 35pF, Figure 1	T_A = +25°C		5		ns
			T_A = -40°C to +85	1			
Charge Injection	Q	V_{GEN} = 0V, R_{GEN} = 0, C_L = 1.0nF, Figure 3			3		pC
NO, NC Off-Capacitance	$C_{NO(OFF)}$, $C_{NC(OFF)}$	f = 1MHz, Figure 4			6.5		pF
Switch On-Capacitance	C_{ON}	f = 1MHz, Figure 4			19.5		pF
Off-Isolation (Note 7)	V_{ISO}	V_{NO} = V_{NC} = $1V_{RMS}$, R_L = 50Ω, C_L = 5pF, Figure 2	f = 1MHz		-67		dB
			f = 10MHz		-45		
On-Channel Bandwidth -3dB	BW	Signal = 0dBm, 50Ω in and out, Figure 2			300		MHz
Crosstalk (Note 8)	V_{CT}	NO or NC = $1V_{RMS}$, C_L = 5pF, R_L = 50Ω, Figure 2	f = 1MHz		-67		dB
			f = 10MHz		-52		
Total Harmonic Distortion	THD	R_L = 600Ω, V_{NC} or V_{NO} = $2V_{P-P}$, f = 20Hz to 20kHz	+25°C		0.035		%
POWER SUPPLY							
Power-Supply Range	V+			1.8		5.5	V
Positive Supply Current	I+	V+ = 5.5V, V_{IN} = 0V or 5.5V	T_A = +25°C		0.001		µA
			T_A = -40°C to +85			1	

Note 2: SC70 and µDFN parts are 100% tested at T_A = +25°C. Limits across the full-temperature range are guaranteed by design and correlation.

Note 3: $\Delta R_{ON} = R_{ON(MAX)} - R_{ON(MIN)}$.

Note 4: R_{ON} flatness is defined as the difference between the maximum and minimum value of on-resistance as measured over the specified analog signal ranges.

Note 5: Guaranteed by design.

Note 6: µDFN is guaranteed by design.

Note 7: Off-Isolation = 20log10 (VO / VI), where VO is V_{COM} and VI is either V_{NC} or V_{NO} from the network analyzer.

Note 8: Crosstalk is measured between the two switches.

Typical Operating Characteristics

(T_A = +25°C, unless otherwise noted.)

ON-RESISTANCE vs. V_{COM}

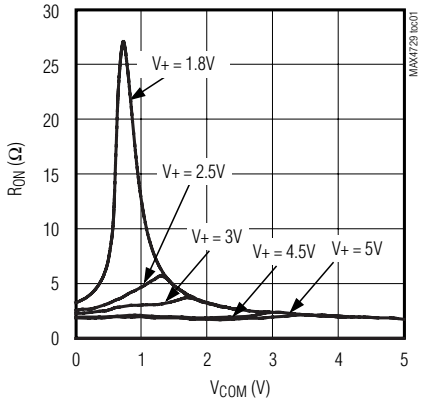

ON-RESISTANCE vs. V_{COM} (V+ = +1.8V)

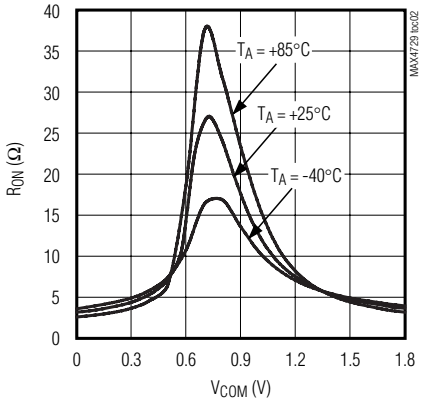

ON-RESISTANCE vs. V_{COM} (V+ = +3V)

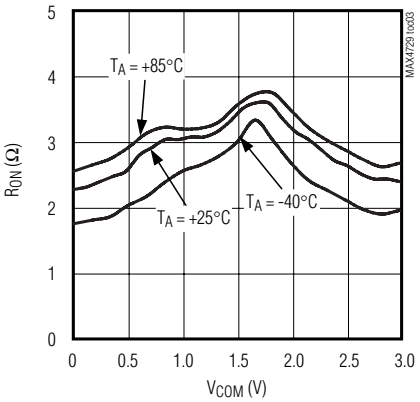

ON-RESISTANCE vs. V_{COM} (V+ = +5V)

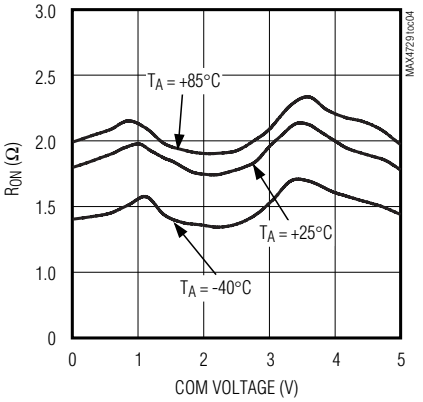

ON/OFF-LEAKAGE CURRENT vs. TEMPERATURE

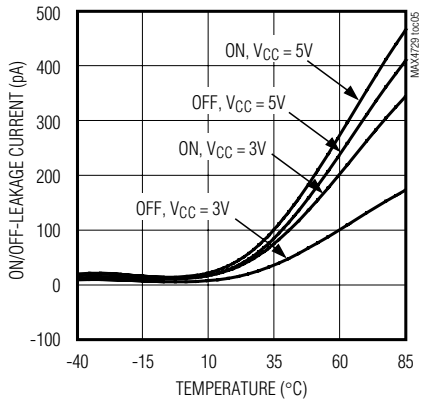

CHARGE INJECTION vs. V_{COM}

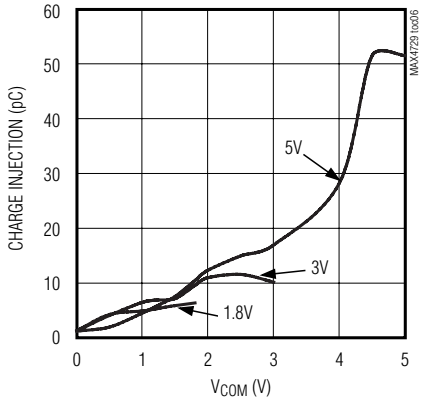

SUPPLY CURRENT vs. TEMPERATURE

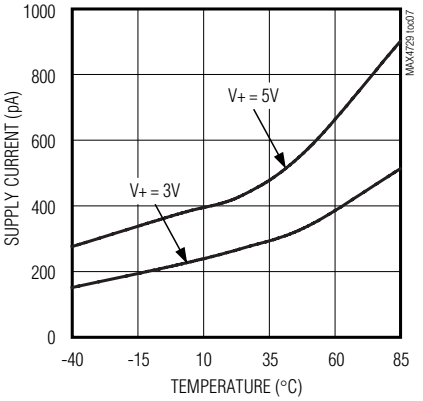

SUPPLY CURRENT vs. LOGIC INPUT VOLTAGE

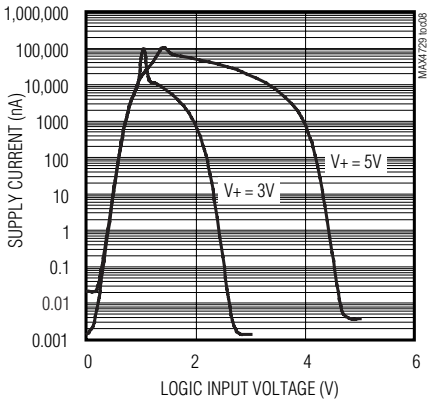

t_{ON}/t_{OFF} vs. SUPPLY VOLTAGE

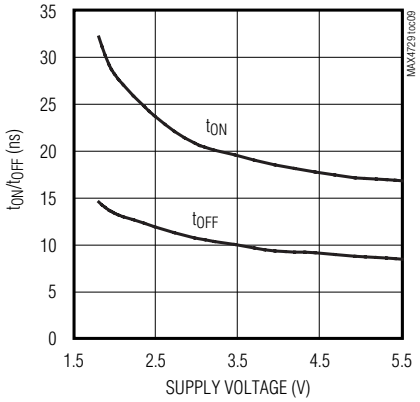

Typical Operating Characteristics (continued)

(T_A = +25°C, unless otherwise noted.)

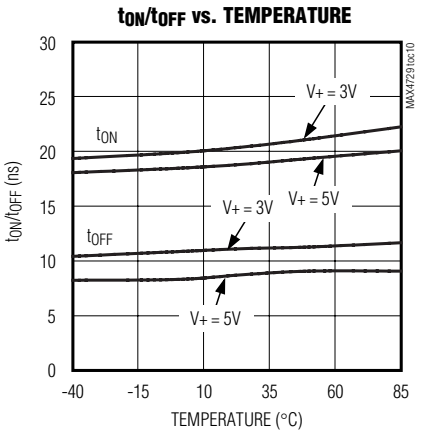

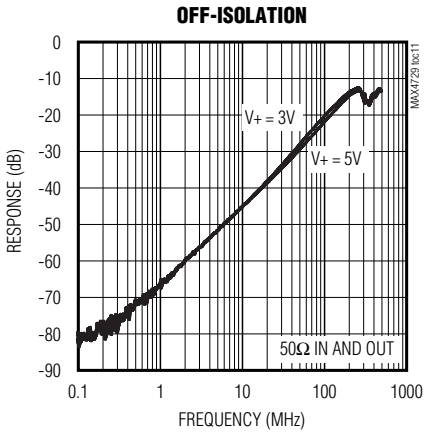

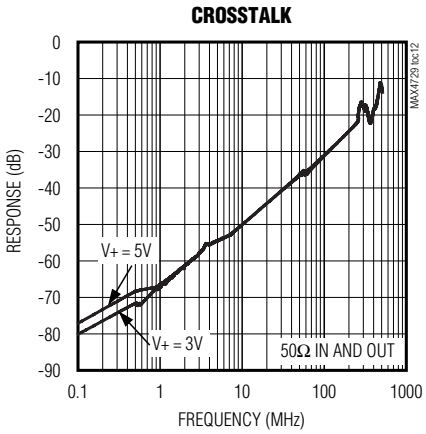

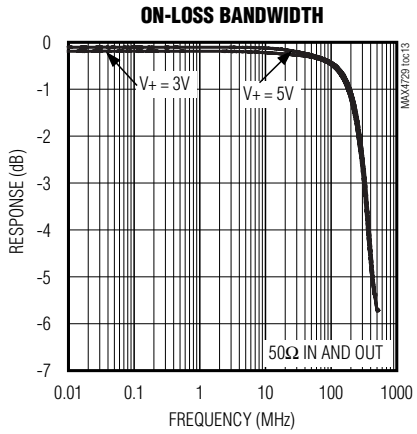

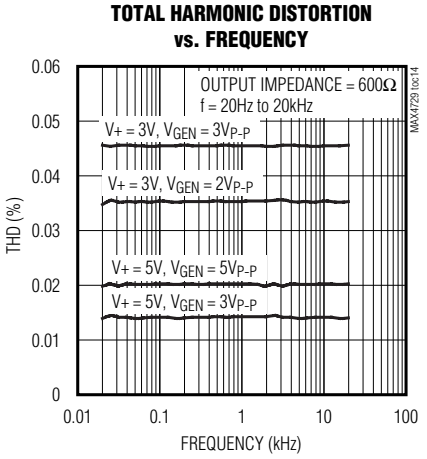

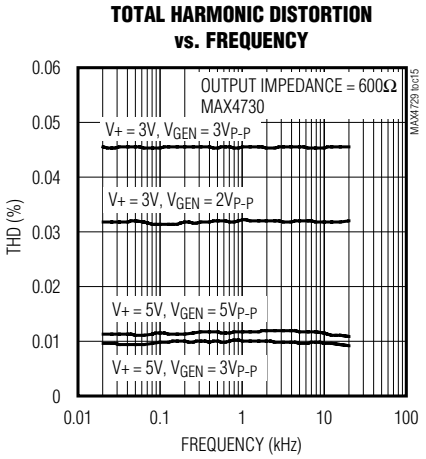

Pin Description

PIN			NAME	FUNCTION
MAX4729		MAX4730		
SC70	µDFN	SC70/µDFN		
1	3	6	IN	Logic-Control Input
2	2	5	V+	Positive Supply Voltage
3	4	2	GND	Ground
4	6	3	NC	Analog Switch Normally Closed Terminal
5	5	4	COM	Analog Switch Common Terminal
6	1	1	NO	Analog Switch Normally Open Terminal

Detailed Description

The MAX4729/MAX4730 single-pole/double-throw (SPDT) switches operate from a single supply ranging from +1.8V to +5.5V. These switches provide low 3.5Ω on-resistance (R_{ON}), as well as 0.45Ω R_{ON} flatness with a 2.7V supply. These devices typically consume only 1nA of supply current, making them suitable for use in low-power, portable applications. The MAX4729/MAX4730 feature low-leakage currents over the entire temperature range, TTL/CMOS-compatible digital logic, and excellent AC characteristics.

Applications Information

Digital Control Inputs

The MAX4729/MAX4730 logic inputs accept up to +5.5V, regardless of supply voltage. For example, with a +3.3V supply, IN can be driven low to GND and high to +5.5V, allowing for mixing of logic levels in a system. With a 2.7V to 3.6V power-supply voltage range, the logic thresholds are set so V_{IL} = 0.4V (max) and V_{IH} = 2V (min).

Power-Supply Sequencing and Overvoltage Protection

Caution: Do not exceed the absolute maximum ratings because stresses beyond the listed ratings can cause permanent damage to the device. Proper power-supply sequencing is recommended for all CMOS devices. Always apply V+ before applying analog signals, especially if the analog signal is not current limited.

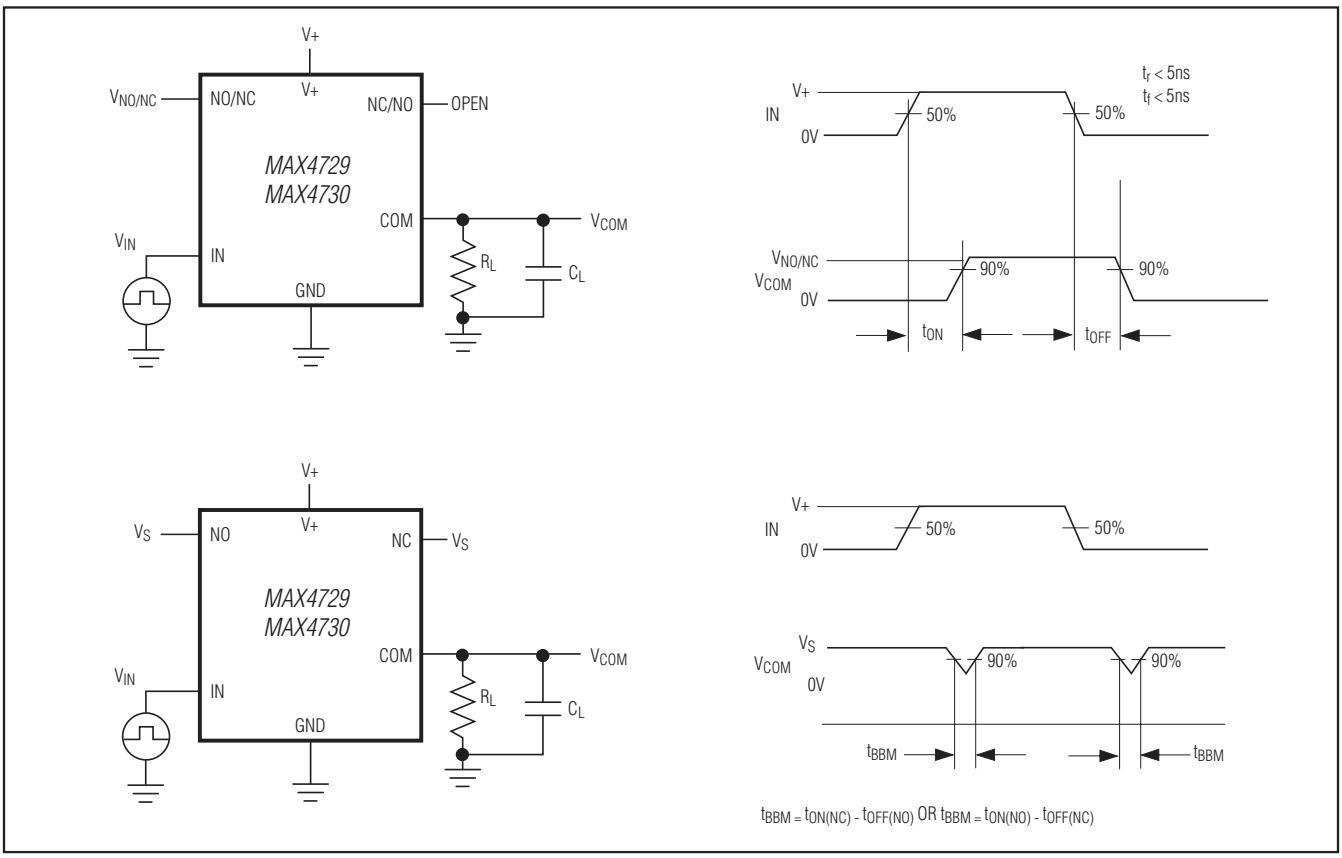

Figure 1. Switching Times

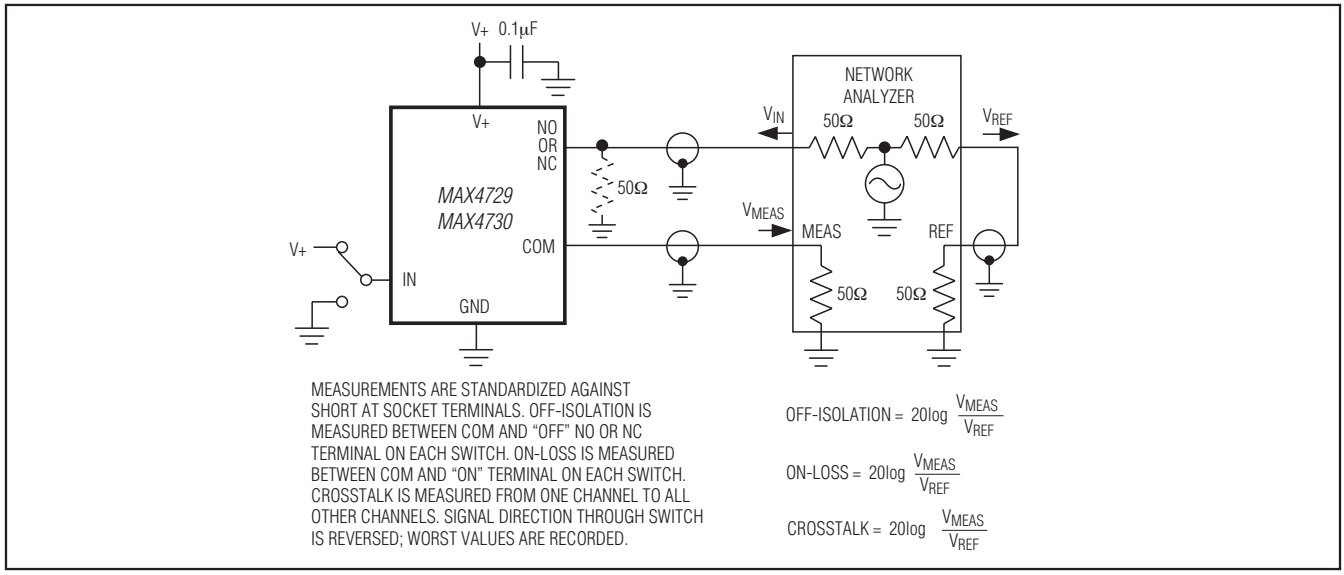

Figure 2. Off-Isolation/On-Loss Bandwidth, Crosstalk

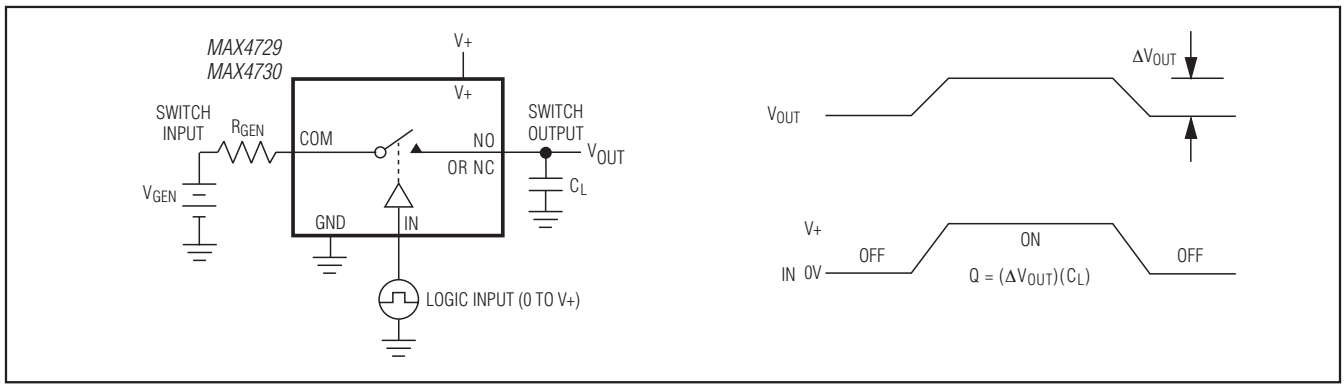

Figure 3. Charge Injection

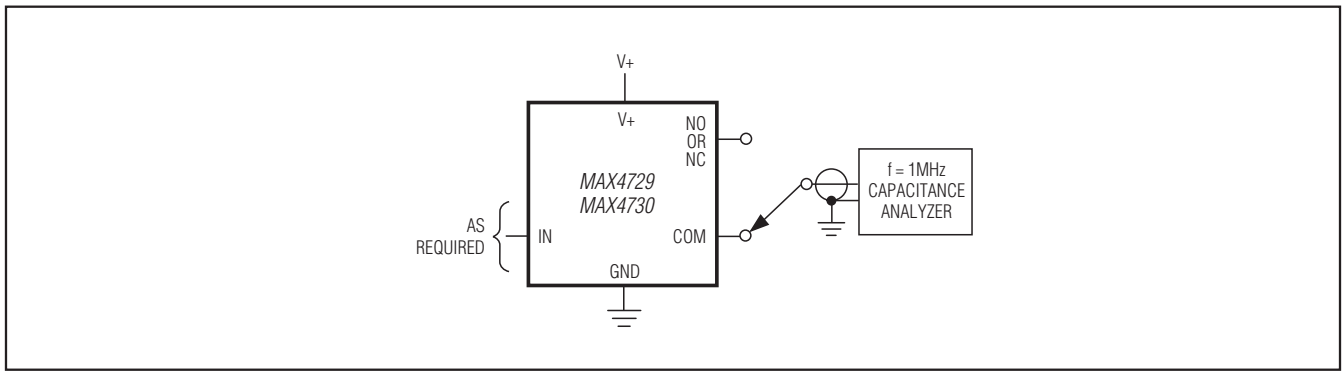

Figure 4. NO, NC, and COM Capacitance

Chip Information

PROCESS: CMOS

Ordering Information

PART	TEMP RANGE	PIN-PACKAGE
MAX4729EXT+T	-40°C to +85°C	6 SC70
MAX4729ELT+T	-40°C to +85°C	6 µDFN
MAX4730EXT+T	-40°C to +85°C	6 SC70
MAX4730ELT+T	-40°C to +85°C	6 µDFN

+Denotes lead(Pb)-free/RoHS-compliant package.

Package Information

For the latest package outline information and land patterns (footprints), go to **www.maximintegrated.com/packages**. Note that a "+", "#", or "-" in the package code indicates RoHS status only. Package drawings may show a different suffix character, but the drawing pertains to the package regardless of RoHS status.

PACKAGE TYPE	PACKAGE CODE	OUTLINE NO.	LAND PATTERN NO.
6 SC70	X6SN+1	21-0077	90-0189
6 µDFN	L611+1	21-0147	90-0080

Revision History

REVISION NUMBER	REVISION DATE	DESCRIPTION	PAGES CHANGED
2	6/14	ELT+ production status corrected	—

Maxim Integrated cannot assume responsibility for use of any circuitry other than circuitry entirely embodied in a Maxim Integrated product. No circuit patent licenses are implied. Maxim Integrated reserves the right to change the circuitry and specifications without notice at any time. The parametric values (min and max limits) shown in the Electrical Characteristics table are guaranteed. Other parametric values quoted in this data sheet are provided for guidance.

© 2014 Maxim Integrated Products, Inc. Maxim Integrated and the Maxim Integrated logo are trademarks of Maxim Integrated Products, Inc.

Looking for pricing, stock, or lifecycle information?

Click below to explore more details on WIN SOURCE:

- View MAX4729EXT+T on WIN SOURCE
- Maxim Integrated Information

Optimize Your Supply Chain with WIN SOURCE Solutions

- Global Sourcing Solution
- Obsolete Management
- Cost Control Management
- Shortage Management
- Alternative Solution
- Excess Inventory Management