THE DATASHEET OF

MAX8564EUB+T

www.win-source.net 0086-755-83957316

19-3290; Rev 2; 6/06

EVALUATION KIT AVAILABLE

±1%, Ultra-Low Output Voltage, Dual and Triple Linear n-FET Controllers

MAX8563/MAX8564/MAX8564A

General Description

The MAX8563/MAX8564/MAX8564A ultra-low-output dual and triple LDO controllers allow flexible and inexpensive point-of-load voltage conversion in motherboards, desknotes, notebooks, and other applications.

These parts feature a 0.5V reference voltage with ±1% accuracy providing tight regulation of the output voltage. The MAX8563 has three n-channel MOSFET controller outputs, and the MAX8564/MAX8564A has two controller outputs.

Each controller output is adjustable from 0.5V to 3.3V when V_{DD} = 12V and between 0.5V and 1.8V when V_{DD} = 5V. Each output is independently enabled and asserts a POK signal when the output reaches 94% of the set value. Each output is protected against a soft short-circuit condition by an undervoltage comparator that disables the output when it drops to under 80% of the set voltage for more than 50µs. For a catastrophic short condition, the regulators are shut down immediately if the output drops below 60% of the set voltage.

The MAX8563 is available in a 16-pin QSOP package, and the MAX8564/MAX8564A are available in a 10-pin µMAX® package.

Applications

Motherboards

Dual/Triple Power Supplies

Desknotes and Notebooks

Graphic Cards

Ultra-Low-Dropout Voltage Regulators

Low-Voltage DSP, µP, and Microcontroller Power Supplies

Features

- ♦ **MAX8563: 3 Outputs**
- ♦ **MAX8564/MAX8564A: 2 Outputs**
- ♦ **±1% Feedback Regulation**
- ♦ **Adjustable Output Voltage Down to 0.5V**
- ♦ **Can Use Ceramic Output Capacitors**
- ♦ **Wide Supply Voltage Range Permits Operation from 5V or 12V Rails**
- ♦ **Individual Enable Control and POK Signal Allows Sequencing**
- ♦ **Overload Protection Against Soft Short-Circuit Condition**
- ♦ **Undervoltage Short-Circuit Protection**
- ♦ **Drive n-Channel MOSFETs**

Ordering Information

PART	TEMP RANGE	PIN-PACKAGE	PKG CODE
MAX8563EEE	-40°C to +85°C	16 QSOP	E16-1
MAX8564EUB	-40°C to +85°C	10 µMAX	U10-2
MAX8564AEUB+	-40°C to +85°C	10 µMAX	U10-2

+Denotes lead-free package.

Pin Configurations appear at end of data sheet.

µMAX is a registered trademark of Maxim Integrated Products, Inc.

Typical Operating Circuit

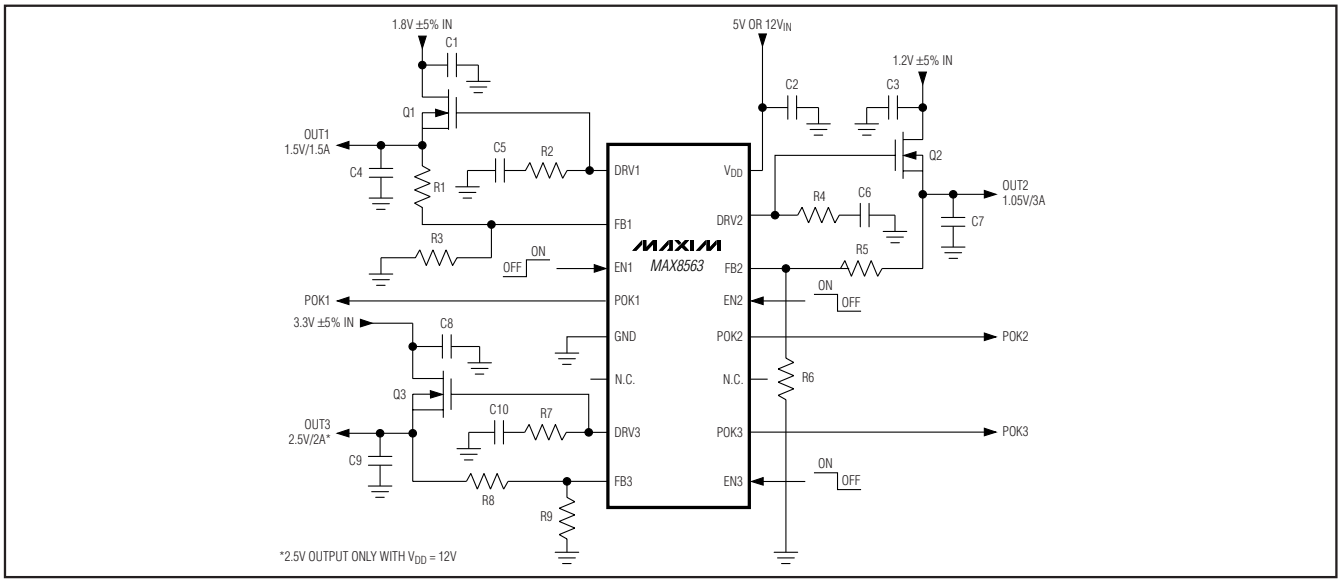

For pricing, delivery, and ordering information, please contact Maxim/Dallas Direct! at 1-888-629-4642, or visit Maxim's website at www.maxim-ic.com.

±1%, Ultra-Low Output Voltage, Dual and Triple Linear n-FET Controllers

ABSOLUTE MAXIMUM RATINGS

V_{DD} to GND .....-0.3V to +14V
DRV1, DRV2, DRV3, EN1, EN2,
EN3 to GND .....-0.3V to (V_{DD} + 0.3V)
FB1, FB2, FB3, POK1, POK2, POK3 to GND .....-0.3V to +6V
Continuous Power Dissipation (T_A = +70°C)
10-Pin µMAX (derate 5.6mW/°C above +70°C) 444.4mW
16-Pin QSOP (derate 8.3mW/°C above +70°C).....666.7mW

Operating Temperature Range .....-40°C to +85°C
Junction Temperature .....+150°C
Storage Temperature Range .....-65°C to +150°C
Lead Temperature (soldering, 10s) .....+300°C

Stresses beyond those listed under "Absolute Maximum Ratings" may cause permanent damage to the device. These are stress ratings only, and functional operation of the device at these or any other conditions beyond those indicated in the operational sections of the specifications is not implied. Exposure to absolute maximum rating conditions for extended periods may affect device reliability.

ELECTRICAL CHARACTERISTICS

(V_{DD} = V_{EN1} = V_{EN2} = V_{EN3} = 5V, V_{GND} = 0V, T_A = -40°C to +85°C, unless otherwise noted. Typical values are at T_A = +25°C.) (Note 1)

PARAMETER	CONDITIONS		MIN	TYP	MAX	UNITS
GENERAL						
V_{DD} Voltage Range			4.5		13.2	V
V_{DD} Undervoltage-Lockout Threshold	Rising, 200mV hysteresis (typ)		3.56	3.76	4.00	V
V_{DD} Quiescent Current	$V_{EN_}$ = V_{DD} = 12V (MAX8563)			930	1600	µA
	$V_{EN_}$ = V_{DD} = 12V (MAX8564/MAX8564A)			660	1200	
V_{DD} Shutdown Current	EN1 = EN2 = EN3 = GND, V_{DD} = 12V				25	µA
LDOs						
FB_ Accuracy	T_A = 0°C to +85°C		0.494	0.5	0.504	V
	T_A = -40°C to +85°C		0.489		0.509	
FB_ Input Bias Current	T_A = +25°C		-100		+100	nA
	T_A = +85°C			-8		
DRV_ Soft-Start Charging Current	MAX8563, MAX8564			100		µA
	MAX8564A			10		
DRV_ Max Sourcing Current	$V_{FB_}$ = 0.45V	T_A = 0°C to +85°C	4			mA
		T_A = -40°C to +85°C	3	7		
DRV_ Max Sinking Current	$V_{FB_}$ = 0.6V	T_A = 0°C to +85°C	3			mA
		T_A = -40°C to +85°C	1.8	7		
DRV_ Max Voltage	V_{DD} = 5V, $V_{FB_}$ = 0.46V		4.7			V
	V_{DD} = 13.2V, $V_{FB_}$ = 0.46V		8.0		10.9	
FB_ Slow Short-Circuit Threshold	Measured at FB_ (falling)			400		mV
FB_ Fast Short-Circuit Threshold	Measured at FB_ (falling)			300		mV
Slow Short-Circuit Timer				50		µs
FB_ to DRV_ Transconductance			0.115	0.24	0.460	Mho
LOGIC						
EN_ Input Low Level					0.7	V
EN_ Input High Level			1.3			V
EN_ Input Leakage Current	$V_{EN_}$ = 0 and V_{DD}, V_{DD} = 13.2V	T_A = +25°C	-0.1		+0.1	µA
		T_A = +85°C		0.001		

ELECTRICAL CHARACTERISTICS (continued)

(V_{DD} = V_{EN1} = V_{EN2} = V_{EN3} = 5V, V_{GND} = 0V, T_A = -40°C to +85°C, unless otherwise noted. Typical values are at T_A = +25°C.) (Note 1)

PARAMETER	CONDITIONS		MIN	TYP	MAX	UNITS
POK_ Threshold Falling	Measured at FB_ (falling)		425	440	455	mV
POK_ Threshold Rising at Startup	Measured at FB_ (rising)		455	470	485	mV
POK_ Output Low Level	Sinking 1mA, V_{DD} = 4.5V, $V_{FB_}$ = 0.4V				0.1	V
POK_ Output High Leakage	V_{DD} = 5.5V	T_A = +25°C			0.1	µA
		T_A = +85°C		0.001		

Note 1: Specifications are production tested at T_A = +25°C. Maximum and minimum specifications over temperature are guaranteed by design.

Typical Operating Characteristics

(Circuit of Figure 1, T_A = +25°C.)

OUTPUT VOLTAGE vs. INPUT VOLTAGE

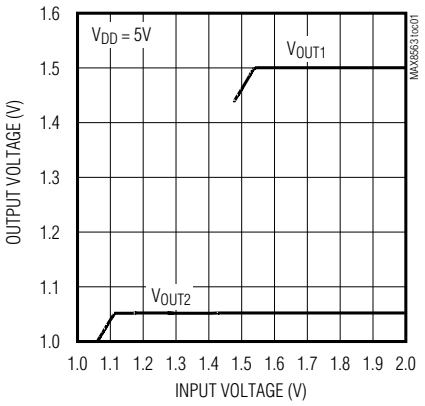

OUTPUT VOLTAGE vs. INPUT VOLTAGE

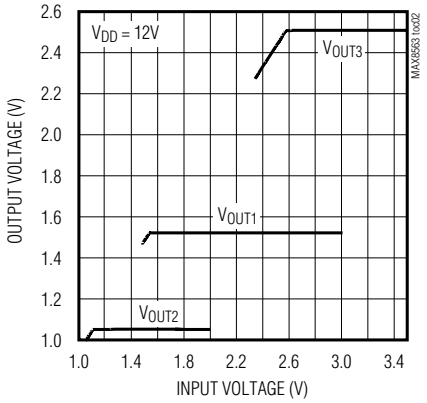

OUTPUT VOLTAGE vs. OUTPUT CURRENT

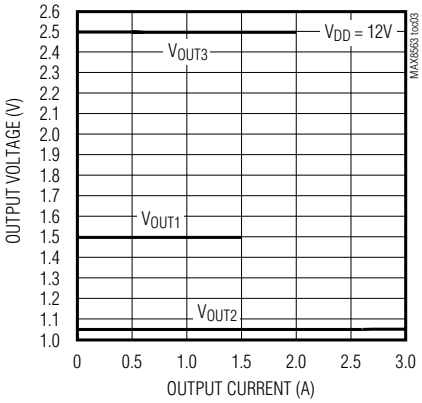

FEEDBACK VOLTAGE vs. TEMPERATURE

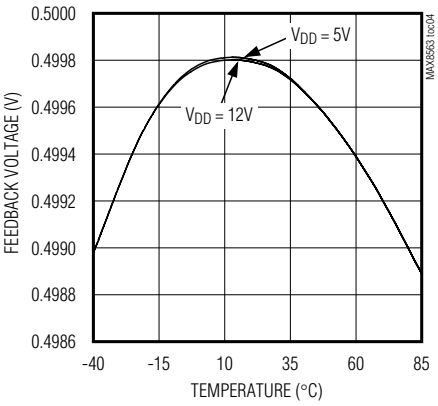

PSRR vs. FREQUENCY

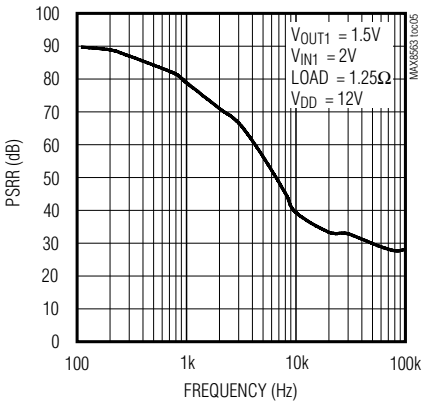

LOAD TRANSIENT

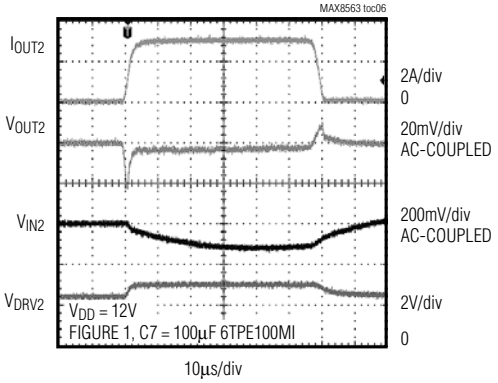

±1%, Ultra-Low Output Voltage, Dual and Triple Linear n-FET Controllers

Typical Operating Characteristics (continued)

(Circuit of Figure 1, T_A = +25°C.)

POWER-ON SEQUENCING WITH V_{DD}

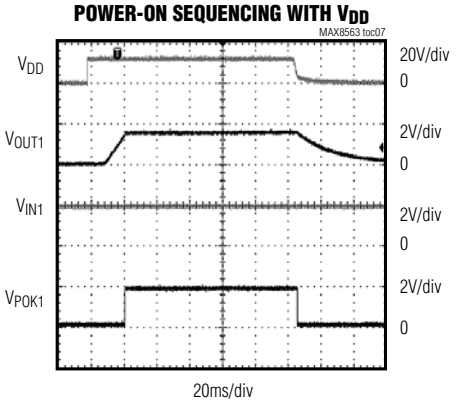

POWER-ON SEQUENCING WITH V_{IN}

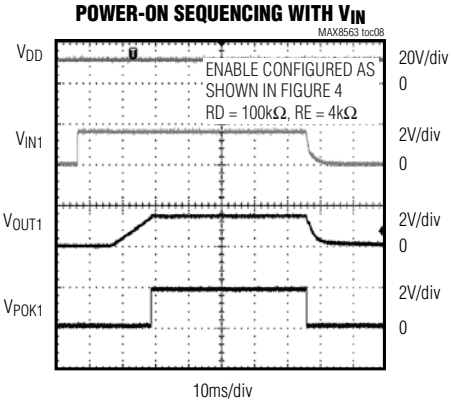

ENABLE-ON SEQUENCING

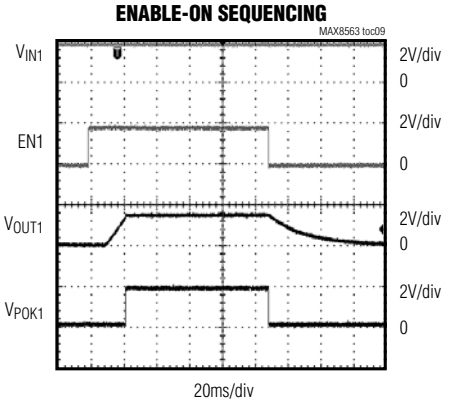

SHORT-CIRCUIT PROTECTION

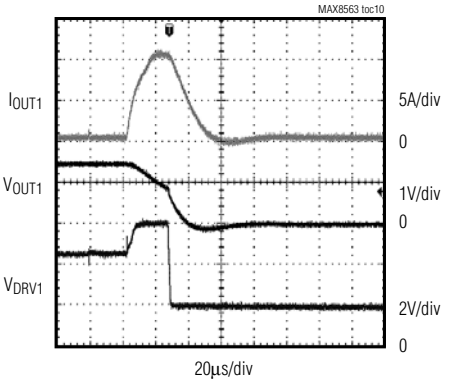

Functional Diagram

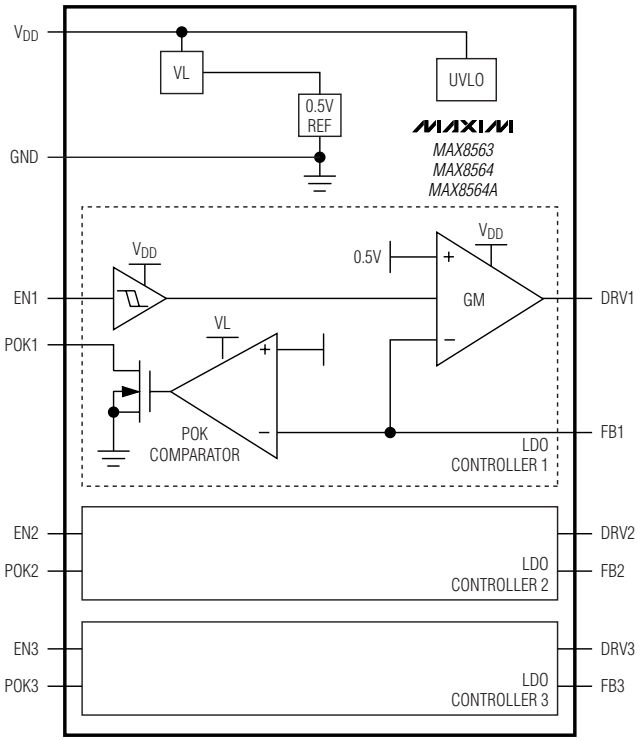

Pin Description

PIN	NAME		FUNCTION
	MAX8563	MAX8564/ MAX8564A	
1	DRV1	DRV1	Output n-MOSFET Drive. Drives the gate of an external n-channel MOSFET to regulate output 1. DRV1 is internally pulled to ground when EN1 is logic low. Connect an external series RC circuit for compensation. See the *Stability Compensation* section.
2	FB1	FB1	Feedback Input for Output 1. Connect to the center of a resistor-divider between output 1 and GND to set the output voltage of output 1. The feedback regulation voltage is 0.500V. See the *Output Voltage Setting* section.
3	EN1	EN1	Enable Control for Output 1. Drive logic high to enable output 1, or logic low to disable the output. Connect to V_{DD} for always-on operation.
4	POK1	POK1	Output 1 Power-Good Signal. Open-drain output pulls low when output 1 is 12% below the nominal regulated voltage.
5	GND	GND	Ground
6	—	POK2	Output 2 Power-Good Signal. Open-drain output pulls low when output 2 is 12% below the nominal regulated voltage.
	N.C.	—	No Internal Connection

±1%, Ultra-Low Output Voltage, Dual and Triple Linear n-FET Controllers

Pin Description (continued)

PIN	NAME		FUNCTION
	MAX8563	MAX8564/ MAX8564A	
7	—	EN2	Enable Control for Output 2. Drive logic high to enable output 2, or logic low to disable the output. Connect to V_{DD} for always-on operation.
	DRV3	—	Output 3 n-MOSFET Drive. Drives the gate of an external n-channel MOSFET to regulate output 3. DRV3 is internally pulled to ground when EN3 is logic low. Connect an external series RC circuit for compensation. See the *Stability Compensation* section.
8	—	FB2	Feedback Input for Output 2. Connect to the center of a resistor-divider between output 2 and GND to set the output voltage of output 2. The feedback regulation voltage is 0.500V. See the *Output Voltage Setting* section.
	FB3	—	Feedback Input for Output 3. Connect to the center of a resistor-divider between output 3 and GND to set the output voltage of output 3. The feedback regulation voltage is 0.500V. See the *Output Voltage Setting* section.
9	—	DRV2	Output 2 n-MOSFET Drive. Drives the gate of the external n-channel MOSFET to regulate output 2. DRV2 is internally pulled to ground when EN2 is logic low. Connect an external series RC circuit for compensation. See the *Stability Compensation* section.
	EN3	—	Enable Control for Output 3. Drive logic high to enable output 3, or logic low to disable the output. Connect to V_{DD} for always-on operation.
10	—	V_{DD}	+5V or +12V Supply Input. Connect to external +5V or +12V supply rail. Bypass with a 0.1µF ceramic or larger capacitor.
	POK3	—	Output 3 Power-Good Signal. Open-drain output pulls low when output 3 is 12% below the nominal regulated voltage.
11	N.C.	—	No Internal Connection
12	POK2	—	Output 2 Power-Good Signal. Open-drain output pulls low when output 2 is 12% below the nominal regulated voltage.
13	EN2	—	Enable Control for Output 2. Drive logic high to enable output 2, or logic low to disable the output. Connect to a V_{DD} for always-on operation.
14	FB2	—	Feedback Input for Output 2. Connect to the center of a resistor-divider between output 2 and GND to set the output voltage of output 2. The feedback regulation voltage is 0.500V. See the *Output Voltage Setting* section.
15	DRV2	—	Output 2 n-MOSFET Drive. Drives the gate of the external n-channel MOSFET to regulate output 2. DRV2 is internally pulled to ground when EN2 is logic low. Connect an external series RC circuit for compensation. See the *Stability Compensation* section.
16	V_{DD}	—	+5V or +12V Supply Input. Connect to an external +5V or +12V supply rail. Bypass with a 0.1µF ceramic or larger capacitor.

Typical Application Circuits

MAX8563: Triple Output

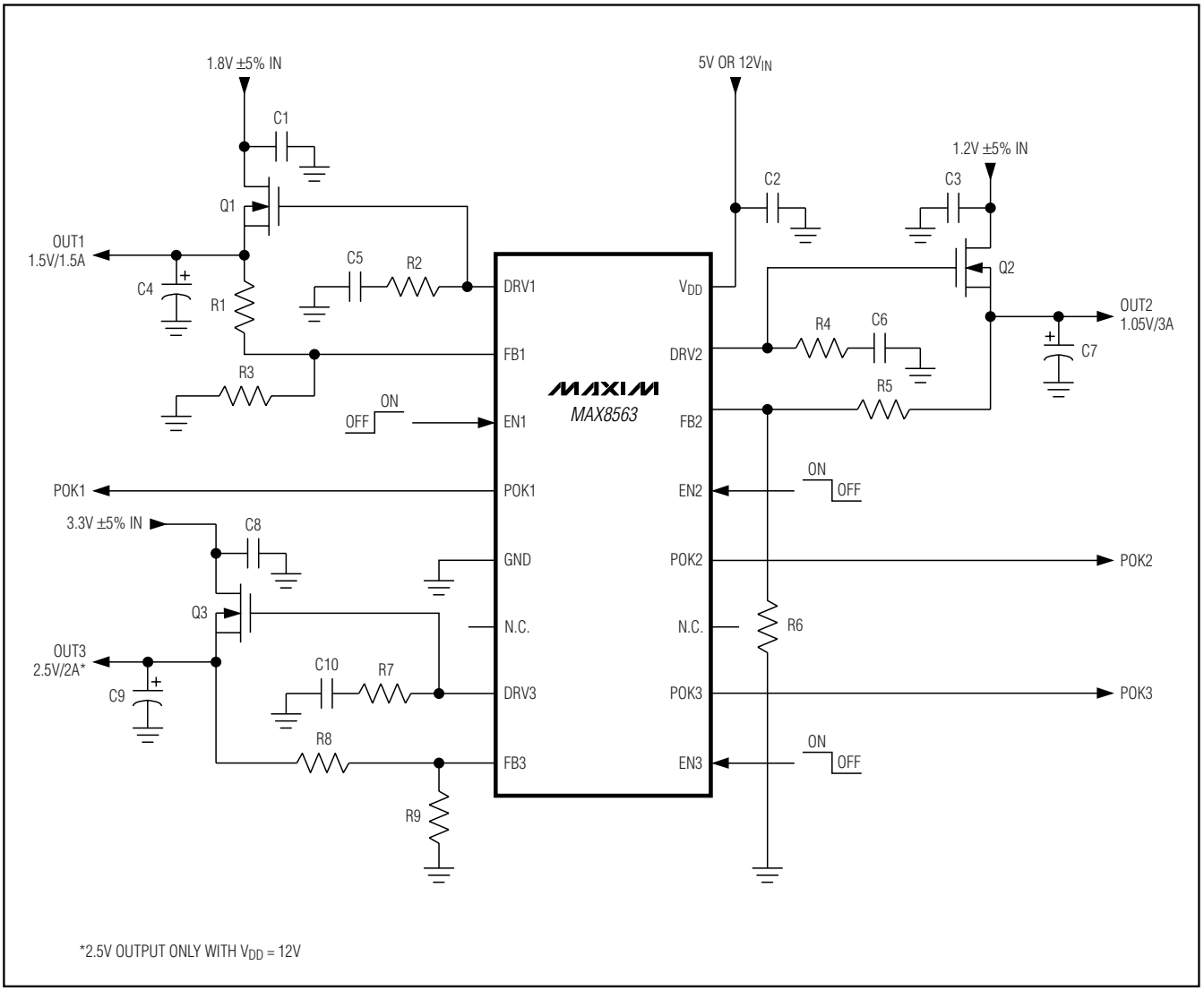

Figure 1. MAX8563 Typical Application Circuit

±1%, Ultra-Low Output Voltage, Dual and Triple Linear n-FET Controllers

Typical Application Circuits (continued)

MAX8564/MAX8564A: Dual Output

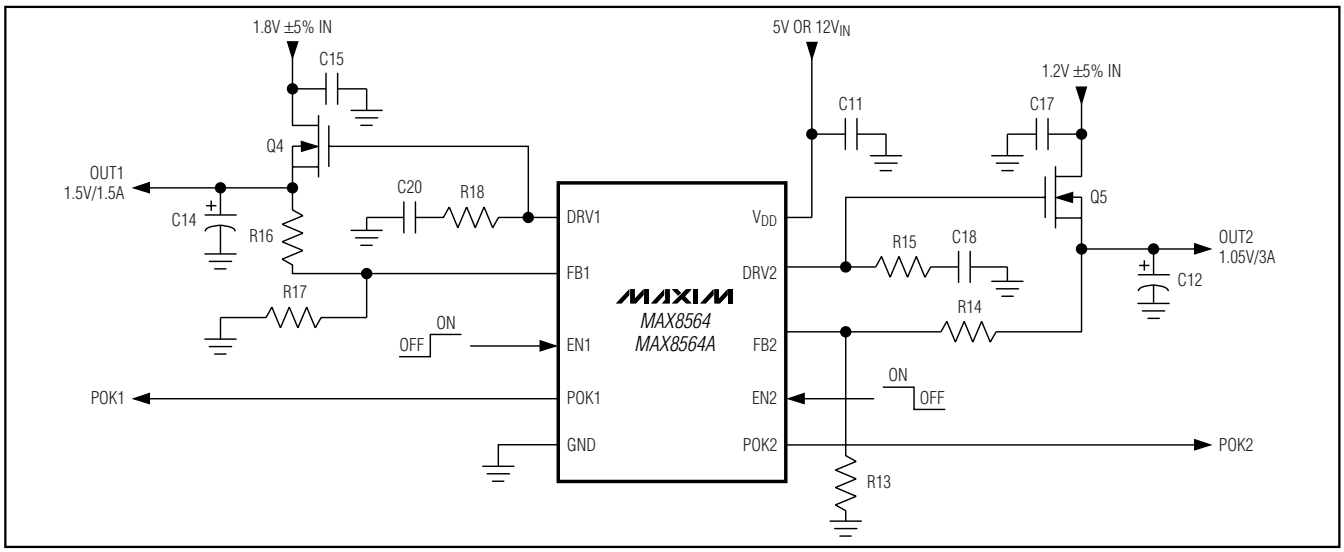

Figure 2. MAX8564/MAX8564A Typical Application Circuit

MAX8563 External Component List

COMPONENTS	QTY	DESCRIPTION
C1, C3, C8	3	2.2µF, 10V X5R ceramic capacitors (optional 100µF, 18mΩ, 6.3V aluminum electrolytic, Sanyo GTPE100MI in parallel)
C2	1	0.1µF, 16V X7R ceramic capacitor
C4, C7, C9	3	100µF, 18mΩ, 6.3V aluminum electrolytic capacitors Sanyo GTPE100MI
C5, C6, C10	3	1µF, 16V X7R ceramic capacitors
Q1/Q2 (dual)	1	Dual n-channel MOSFETs, 30V, 18mΩ Vishay Si4922DY
Q3	1	n-channel MOSFET, 30V, 50mΩ Fairchild Semiconductor FDD6630A
R1	1	665Ω ±1% resistor
R2	1	620Ω ±5% resistor
R3	1	332Ω ±1% resistor
R4	1	390Ω ±5% resistor
R5	1	182Ω ±1% resistor
R6	1	165Ω ±1% resistor
R7	1	910Ω ±5% resistor
R8	1	1kΩ ±1% resistor
R9	1	249Ω ±1% resistor

MAX8564/MAX8564A External Component List

COMPONENTS	QTY	DESCRIPTION
C11	1	0.1µF, 16V X7R ceramic capacitor
C12, C14	2	100µF, 18mΩ, 6.3V aluminum electrolytic capacitors Sanyo GTPE100MI
C15, C17	2	2.2µF, 10V X5R ceramic capacitors (optional 100µF, 18mΩ, 6.3V aluminum electrolytic, Sanyo GTPE100MI in parallel)
C18, C20	2	1µF, 16V X7R ceramic capacitors
Q4/Q5 (dual)	1	Dual n-channel MOSFETs, 30V, 18mΩ Vishay Si4922DY
R13	1	165Ω ±1% resistor
R14	1	182Ω ±1% resistor
R15	1	390Ω ±5% resistor
R16	1	665Ω ±1% resistor
R17	1	332Ω ±1% resistor
R18	1	620Ω ±5% resistor

Detailed Description

The MAX8563/MAX8564/MAX8564A triple and dual LDO controllers allow flexible and inexpensive voltage conversion by controlling the gate of an external n-MOSFET in a source-follower configuration. The MAX8563/MAX8564/MAX8564A consist of multiple identical LDO controllers. Each LDO controller features an enable input (EN_) and a power-OK output (POK_). The MAX8563/MAX8564/MAX8564A also include a 0.5V reference, an internal regulator, and an undervoltage lockout (UVLO). The transconductance amplifier measures the feedback voltage on FB_ and compares it to an internal 0.5V reference connected to the positive input. If the voltage on FB_ is lower than 0.5V, the current output on the gate-drive output DRV_ is increased. If the voltage on FB_ is higher than 0.5V, the current output on the gate-drive output is decreased.

Bias Voltage (V_{DD}), UVLO, and Soft-Start

The MAX8563/MAX8564/MAX8564A bias current for internal circuitry is supplied by V_{DD}. The V_{DD} voltage range is from 4.5V to 13.2V. If V_{DD} drops below 3.76V (typ), the MAX8563/MAX8564/MAX8564A assume that the supply and reference voltages are too low and activate the UVLO circuitry. During UVLO, the internal regulator (VL) and the internal bandgap reference are forced off, DRV_ is pulled to GND, and POK_ is pulled low.

Before any internal startup circuitry is activated, V_{DD} must be above the UVLO threshold. After UVLO indicates that V_{DD} is high enough, the internal VL regulator, the internal bandgap reference, and the bias currents are activated. If EN_ is logic-high after the internal reference and bias currents are activated, then the corresponding DRV_ output initiates operation in soft-start mode. Once the voltage on FB_ reaches 94% of the regulation threshold, the full output current of the LDO controller is permitted.

When an LDO is activated, the respective DRV_ is pulled up from GND with a typical soft-start current of DRV soft-start. The soft-start current limits the slew of the output voltage and limits the initial spike of current that the drain of the external n-MOSFET receives. The size of the compensation capacitor (C_C) limits the slew rate (see Figure 3). This output voltage slew rate is equal to (DRV_soft-start /C_C)mV/ms, where C_C is in µF. The maximum startup drain current is the ratio of C_{OUT} to C_C multiplied by the soft-start current.

Input Voltage (Drain Voltage of the External n-MOSFET)

The minimum input voltage to the drain of the n-MOSFET is a function of the desired output voltage and the dropout voltage of the n-MOSFET. Details on calculating this value are covered in the *Power MOSFET Selection* section.

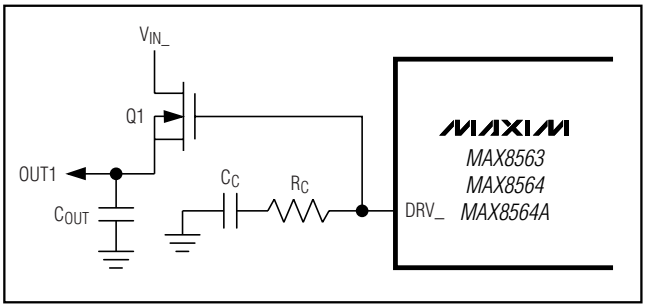

Figure 3. Soft-Start and Compensation Schematic

The maximum input voltage to the drain of the n-MOSFET is a function of the breakdown voltage and the thermal conditions during operation. The breakdown voltage from drain to source is normally provided in the MOSFET data sheet. The theoretical maximum input voltage is the set output voltage plus the breakdown voltage. The thermal constraint is usually the largest concern when discussing maximum input voltage. Details on calculating this value are covered in the *Power MOSFET Selection* section. The MOSFET package and thermal relief on the board are the largest contributors to removing heat from the n-MOSFET. Since output voltage is normally set and maximum output current is fixed, the input voltage becomes the only variable that determines the maximum power dissipated. Thus, the maximum input voltage is limited by the power capability of the n-MOSFET, if it is less than the breakdown voltage, which is most often the case. Ensure input capacitors handle the maximum input voltage.

During a power-up sequence where V_{DD} and EN_ rise before the input to the drain of the n-MOSFET, the MAX8563/MAX8564/MAX8564A drive DRV_ high but the output does not rise. As DRV_ rails and $V_{FB_}$ is still below 80% of the regulation voltage, the MAX8563/MAX8564/MAX8564A assume that an output short-circuit fault is present and shut down that regulator. To avoid this error condition, connect a resistor-divider from V_{DD} to IN_ with the middle node connected to the respective EN_ (see Figure 4). Use the following equations to calculate the resistor values.

When $V_{IN_}$ is off or at a low-voltage state:

$$0.7 > \left(\frac{R_E}{R_E + R_D}\right) \times \left(V_{DD} - V_{IN_}\right) + V_{IN_}$$

When $V_{IN_}$ is on or at a high-voltage state:

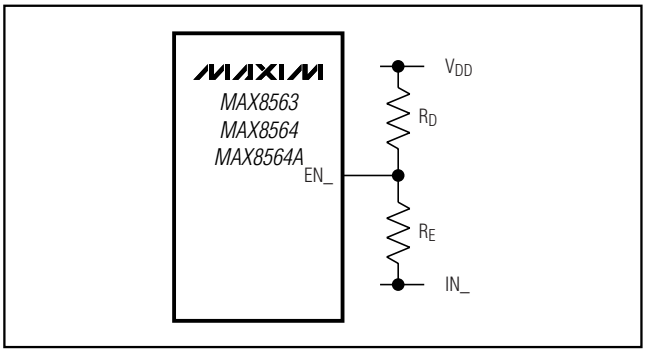

*Figure 4. Voltage-Divider on EN_*

$$1.3 < \left(\frac{R_E}{R_E + R_D}\right) \times \left(V_{DD} - V_{IN_}\right) + V_{IN_}$$

Set R_D = 100kΩ. The above equations also assume that $V_{DD} > V_{IN_} > 1V$ when $V_{IN_}$ is on or at a high-voltage state, and that $V_{DD} > 3V$.

Example: Connect 100kΩ from EN to V_{DD} and 4kΩ from EN_ to IN_. Thus, when V_{DD} = 12V and $V_{IN_}$ = 0V, then $V_{EN_}$ = 0.46V. When V_{DD} = 12V and $V_{IN_}$ = 1.2V, then $V_{EN_}$ = 1.6V.

Alternately, to avoid fault shutdown due to the delay of V_{IN} relative to V_{DD}, pull EN_ low with a separate control logic and only drive high when V_{IN} reaches a steady-state value.

Output Voltage

The output voltage range at the source of the n-MOSFET is from 0.5V to 3.3V when V_{DD} is 12V and from 0.5V to 1.8V when V_{DD} is 5V. The maximum output voltage is a function of the minimum gate-to-source voltage (V_{GS}) of the MOSFET and V_{DD}.

The external n-MOSFET contains a parasitic diode from source to drain. If the output is ever anticipated to exceed the input, current flows from source to drain. If this is undesirable, external protection is needed. A simple solution is the placement of a diode in series, from IN_ to the drain of the n-MOSFET, so that reverse current is not possible. Due to the forward-voltage drop of the diode, the maximum output voltage is reduced and additional power is consumed in the diode.

Enable and POK

The MAX8563/MAX8564/MAX8564A have independent enable control inputs (EN1, EN2, and EN3). Drive EN1 high to enable output 1. Drive EN2 high to enable output 2. Drive EN3 high to enable output 3. When EN_ is driven low, the corresponding DRV_ is internally pulled to GND and POK_ is internally pulled low.

The POK_ is an open-drain output that provides the status of the output voltage and pulls low depending upon circuit conditions. During startup, once the FB_ reaches the POK_ threshold, the POK_ signal goes high. The POK_ threshold has 30mV of hysteresis. When the output voltage drops 12% below the nominal regulated voltage, POK_ pulls low. All POK_ outputs pull low when UVLO is activated or when the internal VL regulator and reference are not ready.

Output Undervoltage and Overload Protection

When an overload event or short circuit occurs, the device that is most vulnerable is the external n-MOSFET. The MAX8563/MAX8564/MAX8564A monitor the output voltage to protect the MOSFET. When DRV_ is at its maximum voltage and the output voltage drops below 80% but is still greater than 60% of its nominal voltage for more than 50µs, the MAX8563/MAX8564/MAX8564A shut down that particular regulator output by pulling DRV_ to GND. Note that there is an additional inherent delay in turning off the MOSFET. The delay is a function of the compensation capacitor and the MOSFET. If the output recovers to greater than 80% within 50µs, it is not considered to be in overload and no action is taken. When the output voltage drops below 60% of its nominal voltage, the MAX8563/MAX8564/MAX8564A immediately shut down that particular regulator output by pulling DRV_ to GND. To restart that particular LDO, V_{DD} must be recycled below the UVLO or the corresponding EN_ must be recycled. The overload protection is shown in the *Typical Operating Characteristics*.

Design Procedure

Output Voltage Setting

The minimum output voltage for each controller of the MAX8563/MAX8564/MAX8564A is typically 0.5V. The maximum output voltage is adjustable up to 3.3V with V_{DD} = 12V, and up to 1.8V with V_{DD} = 5V. To set the output voltage, connect the FB_ pin to the center of a voltage-divider between OUT_ and GND (Figure 5). The resistor-divider current should be at least 1mA per 1A of maximum output current; i.e., for a 3A maximum output current, set the resistor-divider bias current to ≥ 3mA:

$$I_{OUT(MIN)} \geq \frac{I_{OUT(MAX)}}{1000}$$

$$R_B \leq \frac{V_{FB}}{I_{OUT(MIN)}} = 1000 \times \frac{V_{FB}}{I_{OUT(MAX)}} = \frac{500}{I_{OUT(MAX)}}$$

$$R_A = R_B \times \left[\left(\frac{V_{OUT}}{V_{FB}}\right) - 1\right] = R_B \times (2 \times V_{OUT} - 1)$$

To set the output voltage to 0.5V, disconnect R_B from FB_ and connect it to OUT_; this change maintains the minimum load requirement on the output. In this case, R_A can vary from 1kΩ to 10kΩ.

Input and Output Capacitor Selection

The input filter capacitor aids in providing low input impedance to the regulator and also reduces peak currents drawn from the power source during transient conditions. Use a minimum 2.2µF ceramic capacitor from IN_ (drain of the external pass n-MOSFET) to GND (see Figures 1 and 2). If large line transients or load transients are expected, increase the input capacitance to help minimize output voltage changes.

The output filter capacitor and its equivalent series resistance (ESR) contribute to the stability of the regulator (see the *Stability Compensation* section) and affect the load-transient response. If large step loads (no load to full load) are expected, and a very fast response (less than a few microseconds) is required, use a 100µF, 18mΩ POSCAP for the output capacitor. If a larger capacitance is desired, keep the capacitance ESR product (C_{OUT} x R_{ESR}) in the 1µs to 5µs range.

If the application expects smaller load steps (less than 50% of full load), then use a 6.8µF ceramic capacitor or larger per ampere of maximum output current. This option reduces the size and cost of the regulator circuit. Note that some ceramic dielectrics exhibit large capacitance variation with temperature. Use X7R or X5R dielectrics to ensure sufficient capacitance at all operating temperatures. Tantalum and aluminum capacitors are not recommended.

Power MOSFET Selection

The MAX8563/MAX8564/MAX8564A use an n-channel MOSFET as the series pass transistor instead of a p-channel MOSFET to reduce cost. The selected MOSFET must have a gate threshold voltage that meets the following criteria:

$$V_{GS_MAX} \le V_{DD} - V_{OUT_}$$

where V_{DD} is the controller bias voltage, and V_{GS_MAX} is the maximum gate voltage required to yield the on-resistance (R_{DS_ON}) specified by the manufacturer's data sheet. R_{DS_ON} multiplied by the maximum output current (load current) is the maximum voltage dropout across the MOSFET, V_{DS_MIN}. Make sure that V_{DS_MIN} meets the condition below to avoid entering dropout, where output voltage starts to decrease and any ripple on the input also passes through to the output:

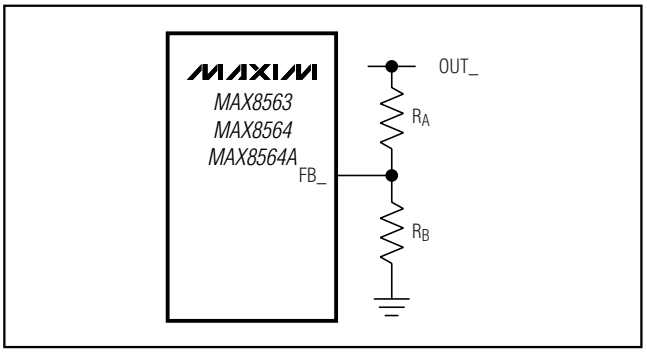

Figure 5. Adjustable Output Voltage

$$V_{IN_MIN} > V_{DS_MIN} + V_{OUT}$$

where V_{IN_MIN} is the minimum input voltage at the drain of the MOSFET. V_{DS_MIN} has a positive temperature coefficient; therefore, the value of V_{DS_MIN} at the highest operating junction temperature should be used.

For thermal management, the maximum power dissipation in the MOSFET is calculated by:

$$P_D = (V_{IN_MAX} - V_{OUT}) \times I_{OUT_MAX}$$

The MOSFET is typically in an SMT package. Refer to the MOSFET data sheet for the PC board area needed to meet the maximum operating junction temperature required.

Stability Compensation

Connect a resistor, R_C, and a capacitor, C_C, in series from the DRV_ pin to GND. The values of the compensation network depend upon the external MOSFET characteristics, the output current range, and the programmed output voltage. The following parameters are needed from the MOSFET data sheet: the input capacitance (C_{ISS} at V_{DS} = 1V), the typical forward transconductance (g_{FS}), and the current at which g_{FS} was measured (I_{DFS}). Calculate the transconductance of the FET at the maximum load current (I_{OUT_MAX}):

$$g_{C(MAX)} = g_{FS} \times \sqrt{\frac{I_{OUT_MAX}}{I_{DFS}}}$$

±1%, Ultra-Low Output Voltage, Dual and Triple Linear n-FET Controllers

For the best transient response in applications with large step loads (see the *Input and Output Capacitor Selection* section for output capacitance requirements), use the following equations to select the compensation components:

$$C_C = \frac{\left[0.16 \times V_{OUT} \times C_{OUT} \times g_{C(MAX)} \times \left(g_{C(MAX)} \times R_{ESR} + 1\right)\right]}{\left(g_{C(MAX)} \times V_{OUT} + I_{OUT_MAX}\right)^2} - C_{ISS}$$

$$R_C = 59 \times \frac{V_{OUT} \times C_{OUT}\left(g_{C(MAX)} \times R_{ESR} + 1\right)}{C_C \times \left(g_{C(MAX)} \times V_{OUT} + I_{OUT_MAX}\right)}$$

where C_{OUT} is the output capacitance and R_{ESR} is the ESR of C_{OUT}.

To use a low-cost ceramic capacitor (see the *Input and Output Capacitor Selection* section for load-transient response characteristics), use the following equations to select the compensation components:

$$C_C = \frac{C_{OUT} \times g_{C(MAX)}}{\left(g_{C(MAX)} \times V_{OUT} + I_{OUT_MAX}\right)} - C_{ISS}$$

$$R_C = 15 \times \frac{C_{OUT}}{C_C \times g_{C(MAX)}}$$

Example

OUTPUT 1 of Figure 1 is used in this example. Table 1 shows the values required to calculate the compensation. The values were taken from the appropriate data sheets and Figure 1.

Table 1. Parameters Required to Calculate Compensation

PARAMETER	CONDITIONS	VALUE	UNITS
MOSFET C_{ISS}	V_{DS} = 1V	2500	pF
MOSFET GFS	IDFS = 8.8A	30	S
V_{OUT1}	Figure 1	1.5	V
I_{OUT_MAX}	Figure 1	1.5	A
C_{OUT1}	Figure 1	100	µF
R_{ESR}	Figure 1	18	mΩ

$$g_{C(MAX)} = 30S \times \sqrt{\frac{1.5A}{8.8A}} = 12.4S$$

$$C_C = 0.16 \times \frac{1.5V \times 100\mu F \times 12.4S \times \left(12.4S \times 18m\Omega + 1\right)}{\left(12.4S \times 1.5V + 1.5A\right)^2} - 2500pF = 0.90\mu F, \text{ use } 1\mu F.$$

$$R_C = 59 \times \frac{1.5V \times 100\mu F \times \left(12.4S \times 18m\Omega + 1\right)}{1\mu F\left(12.4S \times 1.5V + 1.5A\right)} = 599.4\Omega, \text{ use } 620\Omega.$$

PC Board Layout Guidelines

Due to the high-current paths and tight output accuracy required by most applications, careful PC board layout is required. An evaluation kit (MAX8563EVKIT) is available to speed design.

It is important to keep all traces as short as possible to maximize the high-current trace dimensions to reduce the effect of undesirable parasitic inductance. The MOSFET dissipates a fair amount of heat due to the high currents involved, especially during large input-to-output voltage differences. To dissipate the heat generated by the MOSFET, make power traces very wide with a large amount of copper area. An efficient way to achieve good power dissipation on a surface-mount package is to lay out copper areas directly under the MOSFET package on multiple layers and connect the areas through vias. Use a ground plane to minimize impedance and inductance. In addition to the usual high-power considerations, here are four tips to ensure high output accuracy:

- Ensure that the feedback connection to $C_{OUT_}$ is short and direct.
- Place the feedback resistors next to the FB pin.
- Place R_C and C_C next to the DRV_ pin.
- Ensure FB_ and DRV_ traces are away from noisy sources to ensure tight accuracy.

Pin Configurations

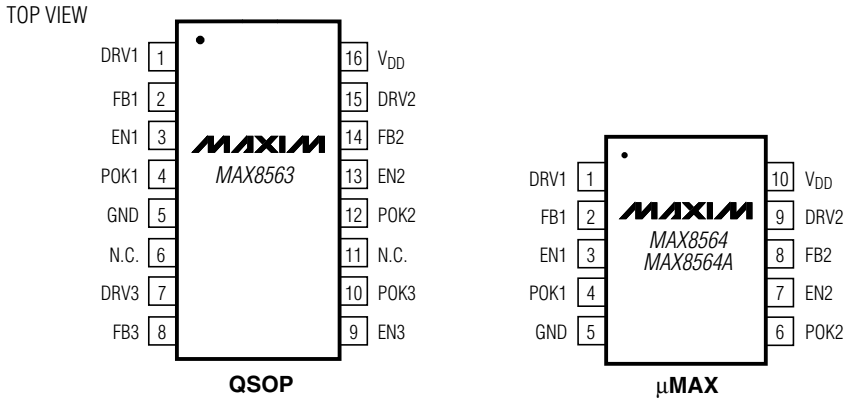

Chip Information

TRANSISTOR COUNT: 1801

PROCESS: BiCMOS

±1%, Ultra-Low Output Voltage, Dual and Triple Linear n-FET Controllers

Package Information

(The package drawing(s) in this data sheet may not reflect the most current specifications. For the latest package outline information, go to **www.maxim-ic.com/packages**.)

QSOP.EPS

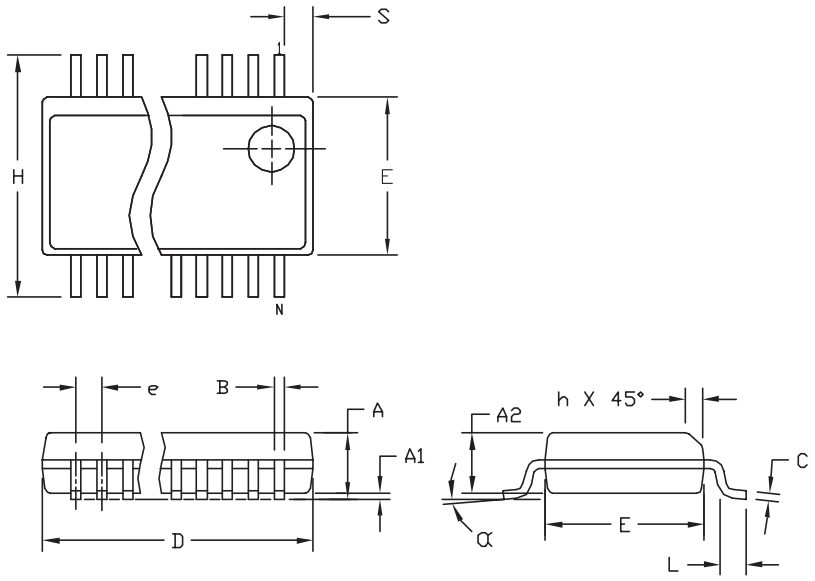

	INCHES		MILLIMETERS	
DIM	MIN	MAX	MIN	MAX
A	.053	.069	1.35	1.75
A1	.004	.010	.102	.254
A2	.049	.065	1.245	1.651
B	.008	.012	0.20	0.30
C	.0075	.0098	0.191	0.249
D	SEE VARIATIONS			
E	.150	.157	3.81	3.99
e	.025 BSC		0.635 BSC	
H	.230	.244	5.84	6.20
h	.010	.016	0.25	0.41
L	.016	.035	0.41	0.89
N	SEE VARIATIONS			
α	0°	8°	0°	8°

VARIATIONS:

	INCHES		MILLIMETERS			
	MIN.	MAX.	MIN.	MAX.	N	
D	.189	.196	4.80	4.98	16	AB
S	.0020	.0070	0.05	0.18		
D	.337	.344	8.56	8.74	20	AD
S	.0500	.0550	1.270	1.397		
D	.337	.344	8.56	8.74	24	AE
S	.0250	.0300	0.635	0.762		
D	.386	.393	9.80	9.98	28	AF
S	.0250	.0300	0.635	0.762		

NOTES:
1). D & E DO NOT INCLUDE MOLD FLASH OR PROTRUSIONS.
2). MOLD FLASH OR PROTRUSIONS NOT TO EXCEED .006" PER SIDE.
3). CONTROLLING DIMENSIONS: INCHES.
4). MEETS JEDEC MO137.

DALLAS SEMICONDUCTOR MAXIM
PROPRIETARY INFORMATION
TITLE: PACKAGE OUTLINE, QSOP .150", .025" LEAD PITCH
APPROVAL | DOCUMENT CONTROL NO. 21-0055 | REV. F | 1/1

Package Information (continued)

(The package drawing(s) in this data sheet may not reflect the most current specifications. For the latest package outline information, go to **www.maxim-ic.com/packages**.)

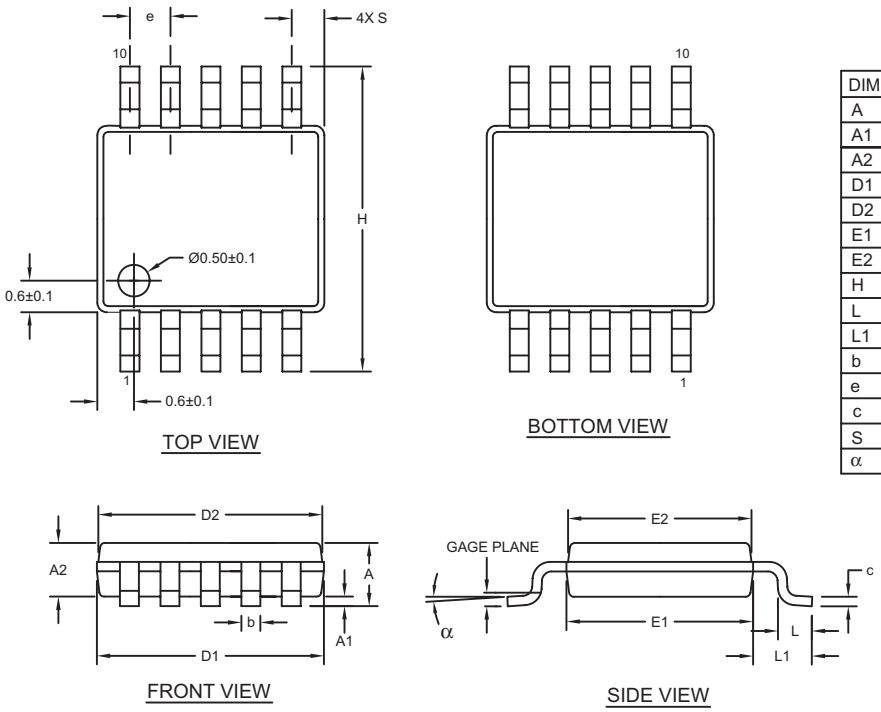

	INCHES		MILLIMETERS	
DIM	MIN	MAX	MIN	MAX
A	-	0.043	-	1.10
A1	0.002	0.006	0.05	0.15
A2	0.030	0.037	0.75	0.95
D1	0.116	0.120	2.95	3.05
D2	0.114	0.118	2.89	3.00
E1	0.116	0.120	2.95	3.05
E2	0.114	0.118	2.89	3.00
H	0.187	0.199	4.75	5.05
L	0.0157	0.0275	0.40	0.70
L1	0.037 REF		0.940 REF	
b	0.007	0.0106	0.177	0.270
e	0.0197 BSC		0.500 BSC	
c	0.0035	0.0078	0.090	0.200
S	0.0196 REF		0.498 REF	
α	0°	6°	0°	6°

10LUMAX.EPS

NOTES:
1. D&E DO NOT INCLUDE MOLD FLASH.
2. MOLD FLASH OR PROTRUSIONS NOT TO EXCEED 0.15mm (.006").
3. CONTROLLING DIMENSION: MILLIMETERS.
4. MEETS JEDEC MO-187C-BA.

DALLAS SEMICONDUCTOR MAXIM

PROPRIETARY INFORMATION

TITLE: PACKAGE OUTLINE, 10L uMAX/uSOP

APPROVAL	DOCUMENT CONTROL NO.	REV.	
	21-0061	I	1/1

Revision History

Pages changes at Rev 2: 1, 12, 14, 15

Maxim cannot assume responsibility for use of any circuitry other than circuitry entirely embodied in a Maxim product. No circuit patent licenses are implied. Maxim reserves the right to change the circuitry and specifications without notice at any time.

© 2006 Maxim Integrated Products MAXIM is a registered trademark of Maxim Integrated Products, Inc.

Looking for pricing, stock, or lifecycle information?

Click below to explore more details on WIN SOURCE:

- View MAX8564EUB+T on WIN SOURCE
- Maxim Integrated Information

Optimize Your Supply Chain with WIN SOURCE Solutions

- Global Sourcing Solution
- Obsolete Management
- Cost Control Management
- Shortage Management
- Alternative Solution
- Excess Inventory Management