THE DATASHEET OF

LTC3100EUD#PBF

www.win-source.net 0086-755-83957316

1.5MHz Synchronous Dual Channel DC/DC Converter and 100mA LDO

FEATURES

- **Extremely Compact Triple-Rail Solution**
- **Burst Mode® Operation, I_Q = 15µA**
- **1.5MHz Fixed Frequency Operation**
- Power Good Indicators
- **700mA Synchronous Step-Up DC/DC**
  - 0.65V to 5V V_{IN} Range
  - 1.5V to 5.25V V_{OUT} Range
  - 94% Peak Efficiency
  - $V_{IN} > V_{OUT}$ Operation
  - Output Disconnect
- **250mA Synchronous Step-Down DC/DC**
  - 1.8V to 5.5V V_{IN} Range
  - 0.6V to 5.5V V_{OUT} Range
- **LDO (V_{IN} Internally Tied to V_{BST})**
  - 0.6V to 5.25V V_{OUT} Range
  - 200mV Dropout Voltage at 100mA
- Available in a 16-Lead 3mm × 3mm QFN Package

APPLICATIONS

- Bar Code Readers
- Medical Instruments
- Low Power Portable Electronic Devices

DESCRIPTION

The LTC®3100 combines a high efficiency 700mA synchronous step-up converter, a 250mA synchronous step-down converter and a 100mA LDO regulator. The LTC3100 features a wide input voltage range of 0.65V to 5V. The step-down converter can be powered by the output of the step-up converter or from a separate power source between 1.8V and 5.5V. The LDO can also be used as a sequencing switch on the output of the boost.

A switching frequency of 1.5MHz minimizes solution footprint by allowing the use of tiny, low profile inductors and ceramic capacitors. The switching regulators use current mode control and are internally compensated, reducing external parts count. Each converter automatically transitions to Burst Mode operation to maintain high efficiency over the full load range. Burst Mode operation can be disabled for low noise applications. The integrated LDO provides a third low noise, low dropout supply.

Anti-ringing circuitry reduces EMI by damping the boost inductor in discontinuous mode. Additional features include shutdown current of under 1µA and overtemperature shutdown. The LTC3100 is housed in a 16-lead 3mm × 3mm 0.75mm QFN package.

LT, LTC, LTM and Burst Mode are registered trademarks of Linear Technology Corporation. All other trademarks are the property of their respective owners.

TYPICAL APPLICATION

Two-Cell, Triple Output Converter

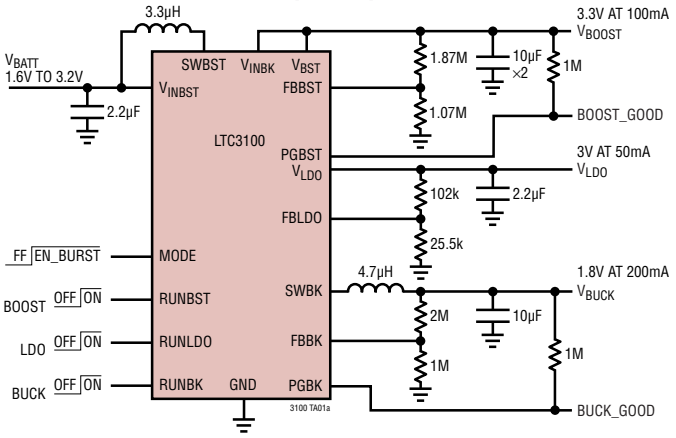

Efficiency and Power Loss vs Load Current, V_{IN} = 2.4V

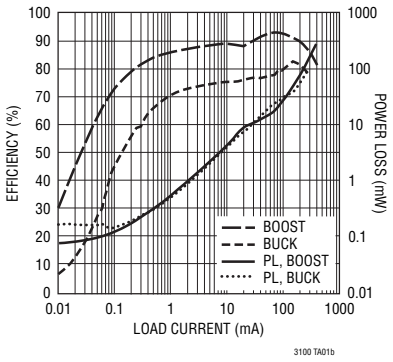

ABSOLUTE MAXIMUM RATINGS

(Note 1)

V_{INBST} and V_{INBK} Voltage ..... –0.3 to 6V
SWBST, SWBK DC Voltage..... –0.3 to 6V
SWBST, SWBK Pulsed (< 100ns) Voltage ..... –0.3 to 7V
FBBST, FBBK, FBLDO, PGBST, PGBK Voltage . –0.3 to 6V
MODE, RUNBST, RUNBK, RUNLDO Voltage... –0.3 to 6V
V_{BST}, V_{LDO} ..... –0.3 to 6V
Operating Temperature (Notes 2, 5).....–40°C to 85°C
Storage Temperature Range.....–65°C to 125°C

PIN CONFIGURATION

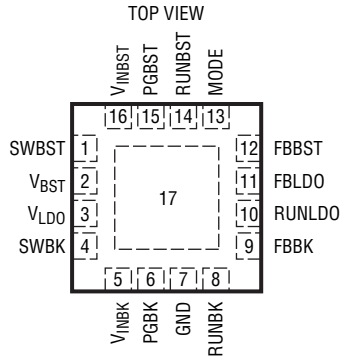

UD PACKAGE
16-LEAD (3mm × 3mm) PLASTIC QFN

T_{JMAX} = 125°C, θ_{JA} = 68°C/W, 4-LAYER BOARD
EXPOSED PAD (PIN 17) IS GND, MUST BE SOLDERED TO PCB (NOTE 6)

ORDER INFORMATION

LEAD FREE FINISH	TAPE AND REEL	PART MARKING	PACKAGE DESCRIPTION	TEMPERATURE RANGE
LTC3100EUD#PBF	LTC3100EUD#TRPBF	LDJR	16-Lead (3mm × 3mm) Plastic QFN	–40°C to 85°C

Consult LTC Marketing for parts specified with wider operating temperature ranges.
Consult LTC Marketing for information on non-standard lead based finish parts.

For more information on lead free part marking, go to: http://www.linear.com/leadfree/
For more information on tape and reel specifications, go to: http://www.linear.com/tapeandreel/

ELECTRICAL CHARACTERISTICS: STEP-UP CONVERTER

The ● denotes the specifications which apply over the full operating temperature range. Extended commercial grade: –40°C to 85°C, V_{INBST} = 1.2V, V_{BST} = 3.3V, T_A = 25°C, unless otherwise noted.

PARAMETER	CONDITIONS		MIN	TYP	MAX	UNITS
Minimum Start-Up Voltage	I_{LOAD} = 1mA	●		0.65	0.90	V
Input Voltage Range	After Start-Up (Minimum Voltage Is Load Dependent)	●	0.5		5	V
Output Voltage Adjust Range		●	1.5		5.25	V
Feedback Voltage		●	1.182	1.200	1.218	V
Feedback Input Current	FBBST = 1.2V			1	50	nA
Quiescent Current (V_{IN}): Shutdown	RUNBST = 0V, Not Including Switch Leakage, V_{BST} = 0V, V_{INBK} = 0V			0.01	1	µA
Quiescent Current: Active	Measured on V_{BST} (Note 4), RUNBK = 0V, RUNLDO = 0V			300	500	µA
Quiescent Current: Burst Mode Operation	Measured on V_{BST}, FBBST > 1.25V MODE = 1V, RUNLDO = 0V MODE = 1V, RUNLDO = 1V			 15 28	 25 45	 µA µA
N-Channel MOSFET Switch Leakage Current	SWBST = 5V, V_{BST}= 5V			0.1	5	µA
P-Channel MOSFET Switch Leakage Current	SWBST = 0V, V_{BST} = 5V			0.1	10	µA

ELECTRICAL CHARACTERISTICS: STEP-UP CONVERTER

The ● denotes the specifications which apply over the full operating temperature range. Extended commercial grade: –40°C to 85°C, V_{INBST} = 1.2V, V_{BST} = 3.3V, T_A = 25°C, unless otherwise noted.

PARAMETER	CONDITIONS		MIN	TYP	MAX	UNITS
N-Channel MOSFET Switch-On Resistance	V_{BST} = 3.3V			0.3		Ω
P-Channel MOSFET Switch-On Resistance	V_{BST} = 3.3V			0.4		Ω
N-Channel MOSFET Current Limit		●	700	850		mA
Maximum Duty Cycle	V_{FBBST} = 1.15V	●	85	90		%
Minimum Duty Cycle	V_{FBBST} = 1.3V	●			0	%
Switching Frequency		●	1.2	1.5	1.8	MHz
RUNBST Input High Voltage		●	0.9			V
RUNBST Input Low Voltage		●			0.3	V
RUNBST Input Current	RUNBST = 1.2V			0.8	2	µA
Soft-Start Time				0.8		ms
PGBST Threshold, Falling	Referenced to Feedback Voltage			–8		%
PGBST Hysteresis	Referenced to Feedback Voltage			3		%
PGBST Voltage Low	5mA Load			65		mV
PGBST Leakage Current	PGBST = 5.5V			0.01	10	µA

ELECTRICAL CHARACTERISTICS: STEP-DOWN CONVERTER

The ● denotes the specifications which apply over the full operating temperature range. Extended commercial grade: –40°C to 85°C, V_{INBK} = 3.3V, T_A = 25°C, unless otherwise noted.

PARAMETER	CONDITIONS		MIN	TYP	MAX	UNITS
Input Voltage Range		●	1.8		5.5	V
Output Voltage Adjust Range		●	0.61		5.5	V
Feedback Voltage		●	590	600	610	mV
Feedback Input Current	FBBK = 600mV			1	30	nA
Quiescent Current: Shutdown	Measured on V_{INBK}, RUNBK = 0V, V_{INBST} = 0V, V_{BST} = 0V Not Including Switch Leakage			0.01	1	µA
Quiescent Current: Active	Measured on V_{INBK} (Note 4), RUNBST = 0V			240	350	µA
Quiescent Current: Burst Mode Operation	Measured on V_{INBK}, FBBK = 620mV, MODE = OPEN, RUNBST = 0V			16	30	µA
N-Channel MOSFET Switch Leakage Current	V_{INBK} = SWBK = 5V			0.1	5	µA
P-Channel MOSFET Switch Leakage Current	SWBK = 0V, V_{INBK} = 5V			0.1	5	µA
N-Channel MOSFET Switch-On Resistance	V_{INBK} = 3.3V			0.45		Ω
P-Channel MOSFET Switch-On Resistance	V_{INBK} = 3.3V			0.55		Ω
P-Channel MOSFET Current Limit		●	340	450		mA
Maximum Duty Cycle	FBBK < 590mV	●	100			%
Minimum Duty Cycle	FBBK > 610mV	●			0	%
Switching Frequency		●	1.2	1.5	1.8	MHz

ELECTRICAL CHARACTERISTICS: STEP-DOWN CONVERTER

The ● denotes the specifications which apply over the full operating temperature range. Extended commercial grade: –40°C to 85°C, V_{INBK} = 3.3V, T_A = 25°C, unless otherwise noted.

PARAMETER	CONDITIONS		MIN	TYP	MAX	UNITS
RUNBK Input High Voltage		●	0.9			V
RUNBK Input Low Voltage		●			0.3	V
RUNBK Input Current	RUNBK = 1.2V			0.8	2	µA
Soft-Start Time				1.3		ms
PGBK Threshold, Falling	Referenced to Feedback Voltage			–8		%
PGBK Hysteresis	Referenced to Feedback Voltage			3		%
PGBK Voltage Low	5mA Load			65		mV
PGBK Leakage Current	PGBK = 5.5V			0.01	10	µA

ELECTRICAL CHARACTERISTICS: LDO REGULATOR

The ● denotes the specifications which apply over the full operating temperature range. Extended commercial grade: –40°C to 85°C, V_{BST} = 3.3V, V_{LDO} = 3V, T_A = 25°C, unless otherwise noted.

PARAMETER	CONDITIONS		MIN	TYP	MAX	UNITS
Input Voltage Range		●	1.8		5.25	V
Output Voltage Adjust Range	(Note 3)	●	0.618		5.25	V
Feedback Voltage		●	582	600	618	mV
Maximum Output Current		●	100	120		mA
Feedback Input Current	FBLDO = 600mV			1	30	nA
Line Regulation	V_{IN} = 3.3V to 5.25V			0.1		%/V
Load Regulation	From 10mA to 100mA Load			0.1		%
Dropout Voltage	I_{OUT} = 100mA	●		130	200	mV
Ripple Rejection (PSRR)	Frequency = 1.5MHz at I_{LOAD} = 50mA, C_{OUT} = 2.2µF (Note 3)			35		dB
Short-Circuit Current Limit	FBLDO < 582mV	●		120	160	mA
Soft-Start Time				0.3		ms
RUNLDO Input High Voltage		●	0.9			V
RUNLDO Input Low Voltage		●			0.3	V
RUNLDO Input Current	RUNLDO = 1.2V			0.8	2	µA
Quiescent Current—Active	RUNLDO = 3.3V, Measured on V_{BST} RUNBST = RUNBK = 0V, V_{INBK} = 0V			26	40	µA

ELECTRICAL CHARACTERISTICS: COMMON CIRCUITRY

The ● denotes the specifications which apply over the full operating temperature range. Extended commercial grade: –40°C to 85°C, V_{BST} or V_{INBK} = 3.3V, T_A = 25°C, unless otherwise noted.

PARAMETER	CONDITIONS		MIN	TYP	MAX	UNITS
MODE Input High Voltage		●	0.9			V
MODE Input Low Voltage		●			0.3	V
MODE Input Current	MODE = 0V MODE = 5V			–3.3 1.7	–5 3	µA µA

ELECTRICAL CHARACTERISTICS

Note 1: Stresses beyond those listed under Absolute Maximum Ratings may cause permanent damage to the device. Exposure to any Absolute Maximum Rating condition for extended periods may affect device reliability and lifetime.

Note 2: The LTC3100E is guaranteed to meet performance specifications from 0°C to 85°C. Specifications over –40°C to 85°C operating temperature range are assured by design, characterization and correlation with statistical process controls.

Note 3: Specification is guaranteed by design and not 100% tested in production.

Note 4: Current measurements are made when the output is not switching.

Note 5: This IC includes overtemperature protection that is intended to protect the device during momentary overload conditions. Junction temperature will exceed 125°C when overtemperature protection is active. Continuous operation above the specified maximum operating junction temperature may result in device degradation or failure.

Note 6: Failure to solder the exposed backside of the package to the PC board ground plane will result in a thermal resistance much higher than 68°C/W.

TYPICAL PERFORMANCE CHARACTERISTICS T_A = 25°C, unless otherwise specified.

Step-Up DC/DC Converter

Efficiency vs Load Current and V_{IN} for V_O = 1.8V

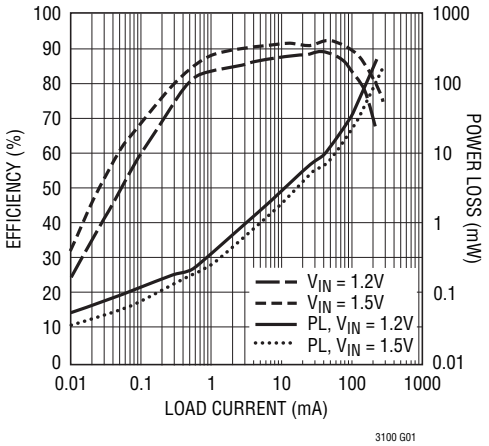

Efficiency vs Load Current and V_{IN} for V_O = 3.3V

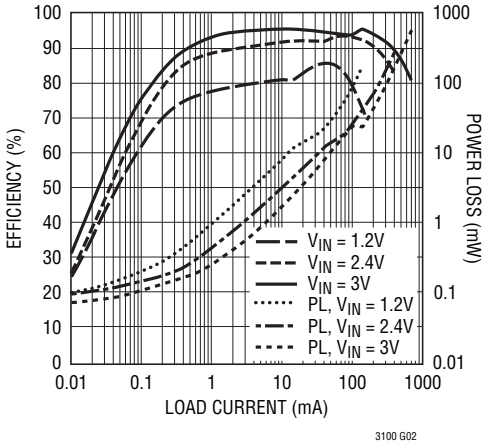

Efficiency vs Load Current and V_{IN} for V_O = 5V

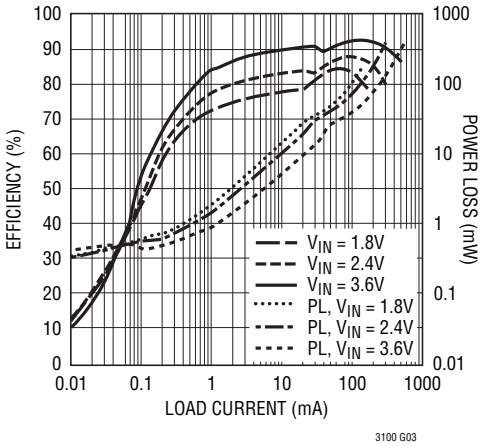

3.3V, 100mA Efficiency vs V_{IN}

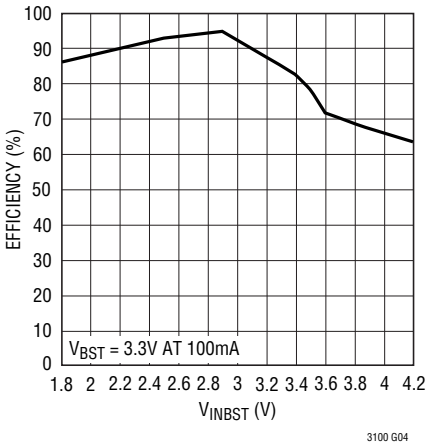

TYPICAL PERFORMANCE CHARACTERISTICS T_A = 25°C, unless otherwise specified.

Step-Up DC/DC Converter

No-Load Input Current vs V_{IN}, Mode = Open, LDO and Buck Off

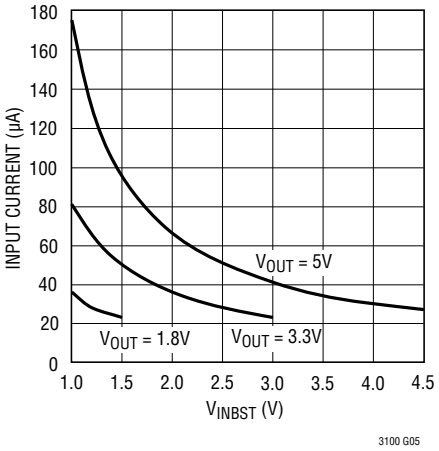

Maximum Output Current vs V_{IN}

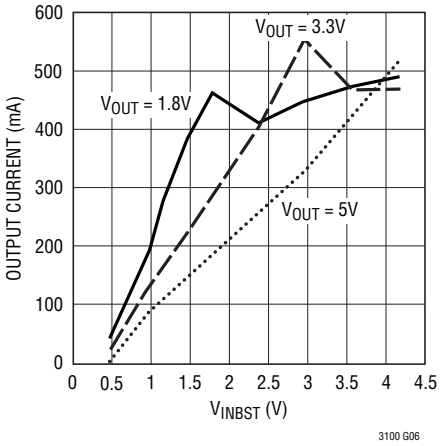

Maximum Load Current During Start-Up vs V_{IN}

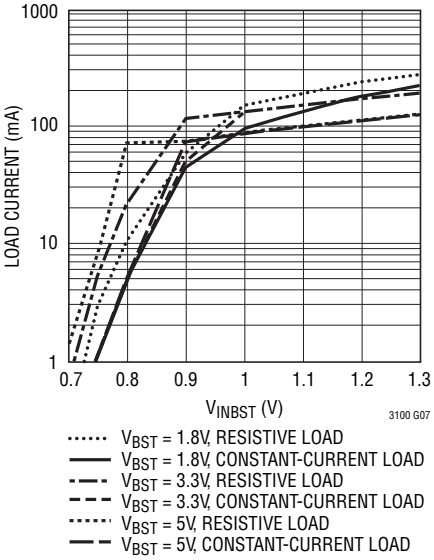

Burst Mode Threshold Current vs V_{IN}

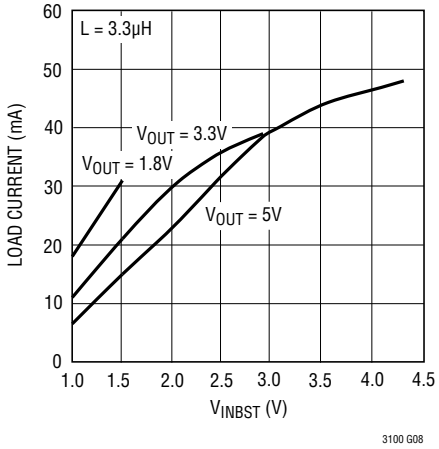

Start-Up Voltage vs Temperature

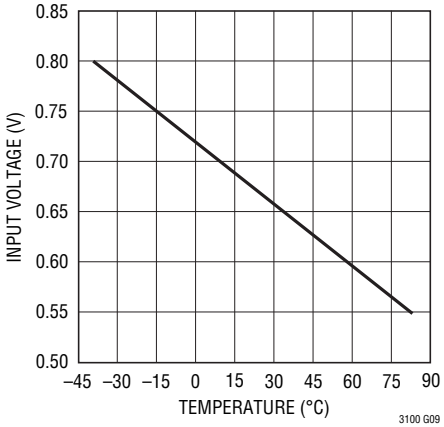

V_{OUT} and I_{IN} During Soft-Start

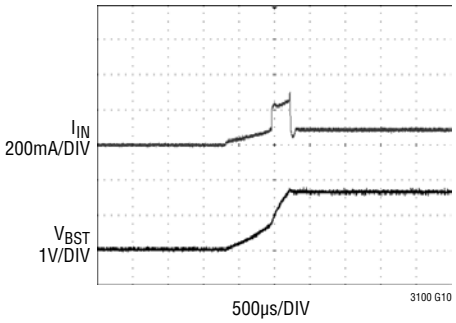

Output Voltage Ripple in Fixed Frequency and Burst Mode Operation

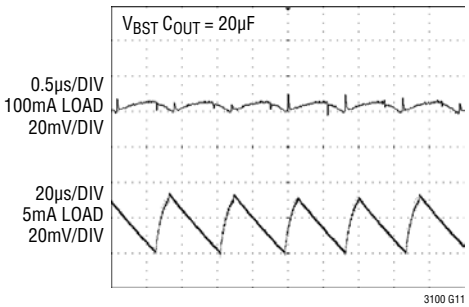

TYPICAL PERFORMANCE CHARACTERISTICS T_A = 25°C, unless otherwise specified.

Step-Up DC/DC Converter

Load Step Response, 50mA-150mA Fixed Frequency Mode

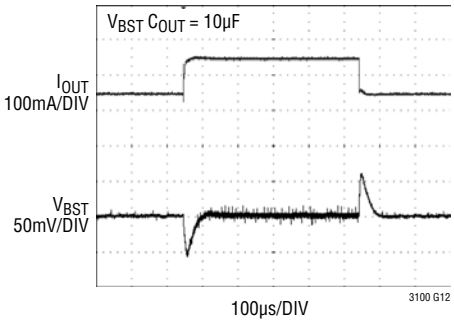

Load Step Response, 5mA-100mA Burst Mode Operation Enabled

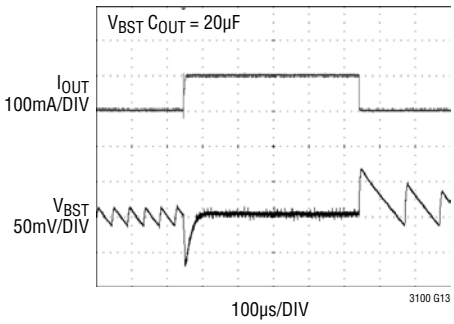

LDO Regulator

Dropout Voltage vs V_{OUT} and Temperature (I_{OUT} = 100mA)

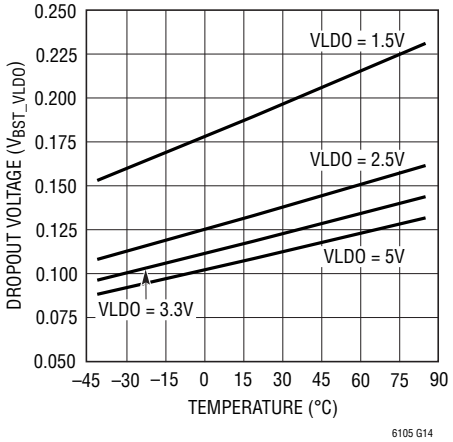

Ripple Rejection

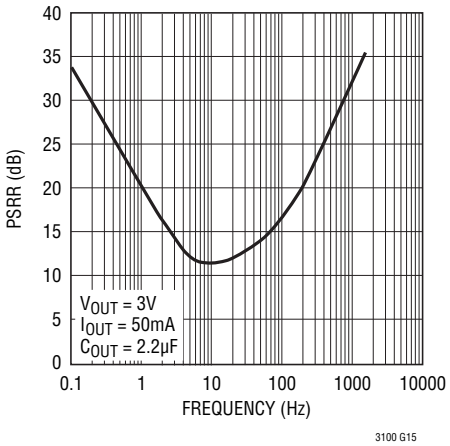

Soft-Start Time

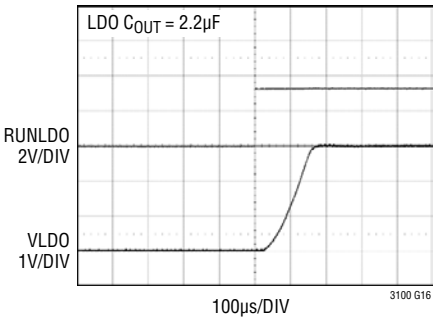

Burst Mode Operation Ripple Rejection

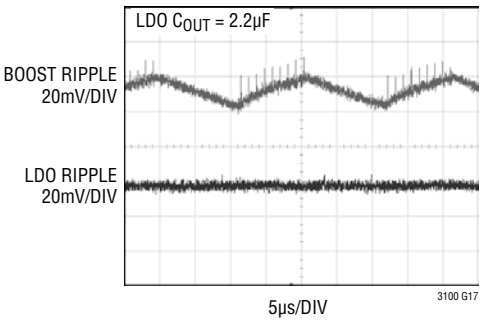

Load Step Response, 10mA-60mA

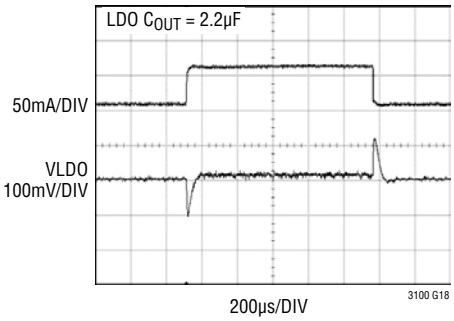

TYPICAL PERFORMANCE CHARACTERISTICS T_A = 25°C, unless otherwise specified.

Step-Down DC/DC Converter

Efficiency vs Load Current and V_{IN} for V_O = 1.2V

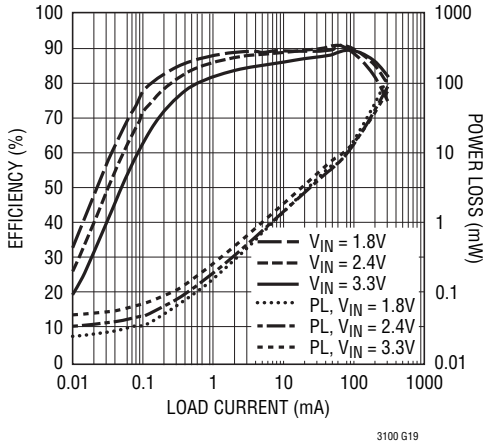

Efficiency vs Load Current and V_{IN} for V_O = 1.8V

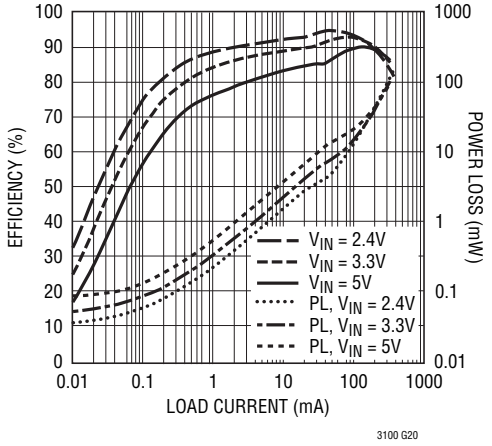

No-Load Input Current vs V_{INBK} (Mode = Open)

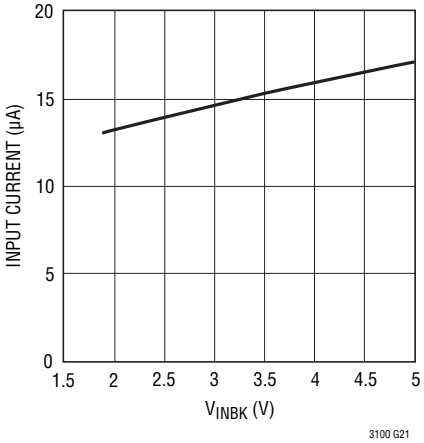

Burst Mode Operation Threshold Current vs V_{IN}

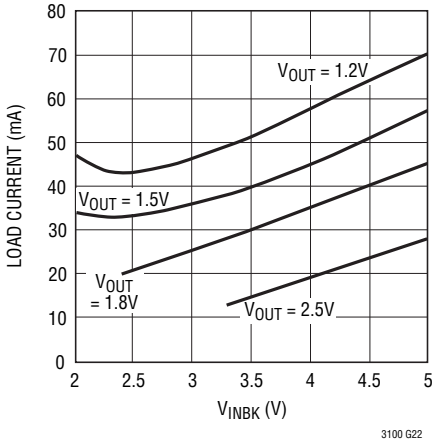

V_{OUT} and I_{IN} During Soft-Start

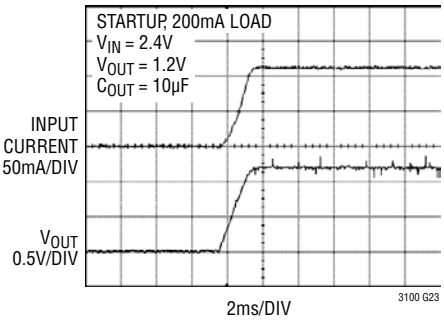

Output Voltage Ripple in Fixed Frequency and Burst Mode Operation

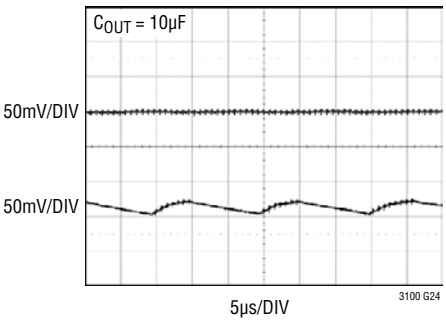

Load Step Response, Fixed Frequency Mode 10mA to 100mA

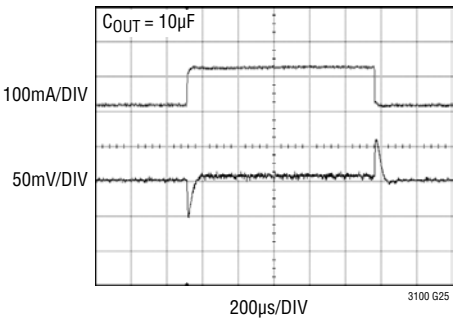

Load Step Response, Burst Mode Operation Enabled 10mA to 100mA

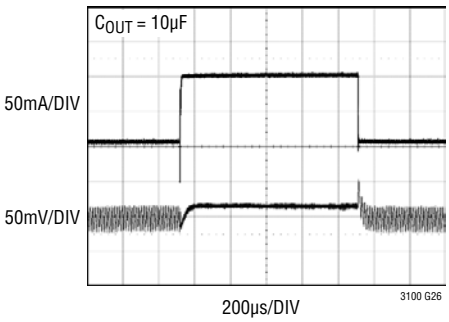

TYPICAL PERFORMANCE CHARACTERISTICS T_A = 25°C, unless otherwise specified.

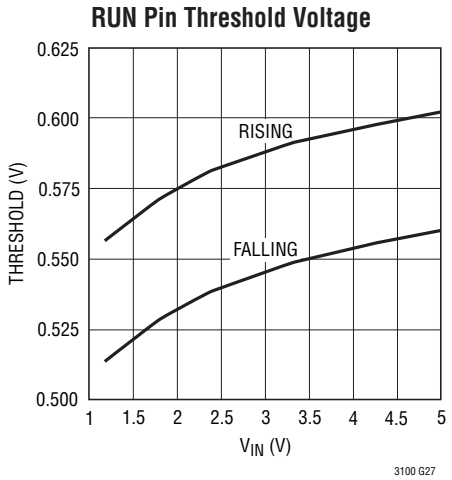

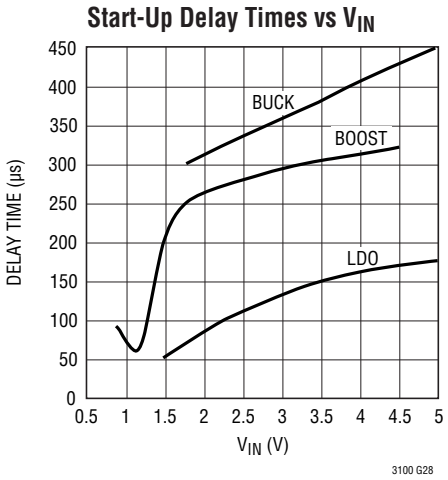

PIN FUNCTIONS

SWBST (Pin 1): Switch Pin for the Boost Converter. Connect the boost inductor between SWBST and V_{INBST}. Keep PCB trace lengths as short and wide as possible to reduce EMI. If the inductor current falls to zero, an internal anti-ringing switch is connected from SWBST to V_{INBST} to minimize EMI.

V_{BST} (Pin 2): Output Voltage for the Boost Converter (which is the drain of the internal synchronous rectifier) and Input Voltage for the LDO. PCB trace length from V_{BST} to the output filter capacitor (10µF minimum) should be as short and wide as possible.

V_{LDO} (Pin 3): Output Voltage of the LDO Regulator. Connect a 1µF ceramic capacitor between V_{LDO} and GND. Larger values of capacitance may be used for higher PSRR or improved transient response.

SWBK (Pin 4): Switch Pin for the Buck Converter. Connect the buck inductor between SWBK and the buck output filter capacitor. Keep PCB trace lengths as short and wide as possible to reduce EMI.

V_{INBK} (Pin 5): Input Voltage for the Buck Converter. Connect a minimum of 4.7µF ceramic decoupling capacitor from this pin to ground.

PGBK (Pin 6): Open-Drain Output That Pulls Low When FBBK Is More Than 8% Below Its Regulated Voltage. Connect a pull-up resistor from this pin to a positive supply less than 6V.

GND (Pin 7): Signal Ground. Provide a short, direct PCB path between GND and the PC board ground plane connected to the Exposed Pad.

RUNBK (Pin 8): Logic-Controlled Shutdown Input for the Buck Converter. There is an internal 4MΩ pull-down on this pin.

RUNBK = High: Normal operation

RUNBK = Low: Shutdown

FBBK (Pin 9): Feedback Input to the g_m Error Amplifier for the Buck Converter. Connect the resistor divider tap to this pin. The output voltage can be adjusted from 0.6V to 5.5V by:

$$V_{OUT_BUCK} = 0.600V \bullet \left(1 + \frac{R6}{R5}\right)$$

RUNLDO (Pin 10): Logic-Controlled Shutdown Input for the LDO Regulator. There is an internal 4MΩ pull-down on this pin.

RUNLDO = High: Normal operation

RUNLDO = Low: Shutdown

PIN FUNCTIONS

FBLDO (Pin 11): Feedback Input to the g_m Error Amplifier for the LDO Regulator. Connect the resistor divider tap to this pin. The output voltage can be adjusted from 0.6V to 5.25V by:

$$V_{OUT_LDO} = 0.600V \bullet \left(1 + \frac{R4}{R3}\right)$$

FBBST (Pin 12): Feedback Input to the g_m Error Amplifier for the Boost Converter. Connect the resistor divider tap to this pin. The output voltage can be adjusted from 1.5V to 5.25V by:

$$V_{OUT_BOOST} = 1.20V \bullet \left(1 + \frac{R2}{R1}\right)$$

MODE (Pin 13): Logic-Controlled Mode Select Pin for Both the Boost and Buck Converters. There is an internal 1MΩ pull-up on this pin to the higher of V_{INBST}, V_{BST} or V_{INBK}.

MODE = Float or High: Enables Burst Mode operation for both the boost and the buck.

MODE = Low: Disables Burst Mode operation. Both converters will operate in fixed frequency mode regardless of load current.

RUNBST (Pin 14): Logic-Controlled Shutdown Input for the Boost Converter. There is an internal 4MΩ pull-down on this pin.

RUNBST = High: Normal operation

RUNBST = Low: Shutdown

PGBST (Pin 15): Open-Drain Output That Pulls to Ground When FBBST Is More Than 8% Below Its Regulated Voltage. Connect a pull-up resistor from this pin to a positive supply less than 6V.

V_{INBST} (Pin 16): Input Voltage for the Boost Converter. Connect a minimum of 1µF ceramic decoupling capacitor from this pin to ground.

Exposed Pad (Pin 17): The Exposed Pad **must** be soldered to the PCB ground plane. It serves as the power ground connection, and as a means of conducting heat away from the die.

BLOCK DIAGRAM

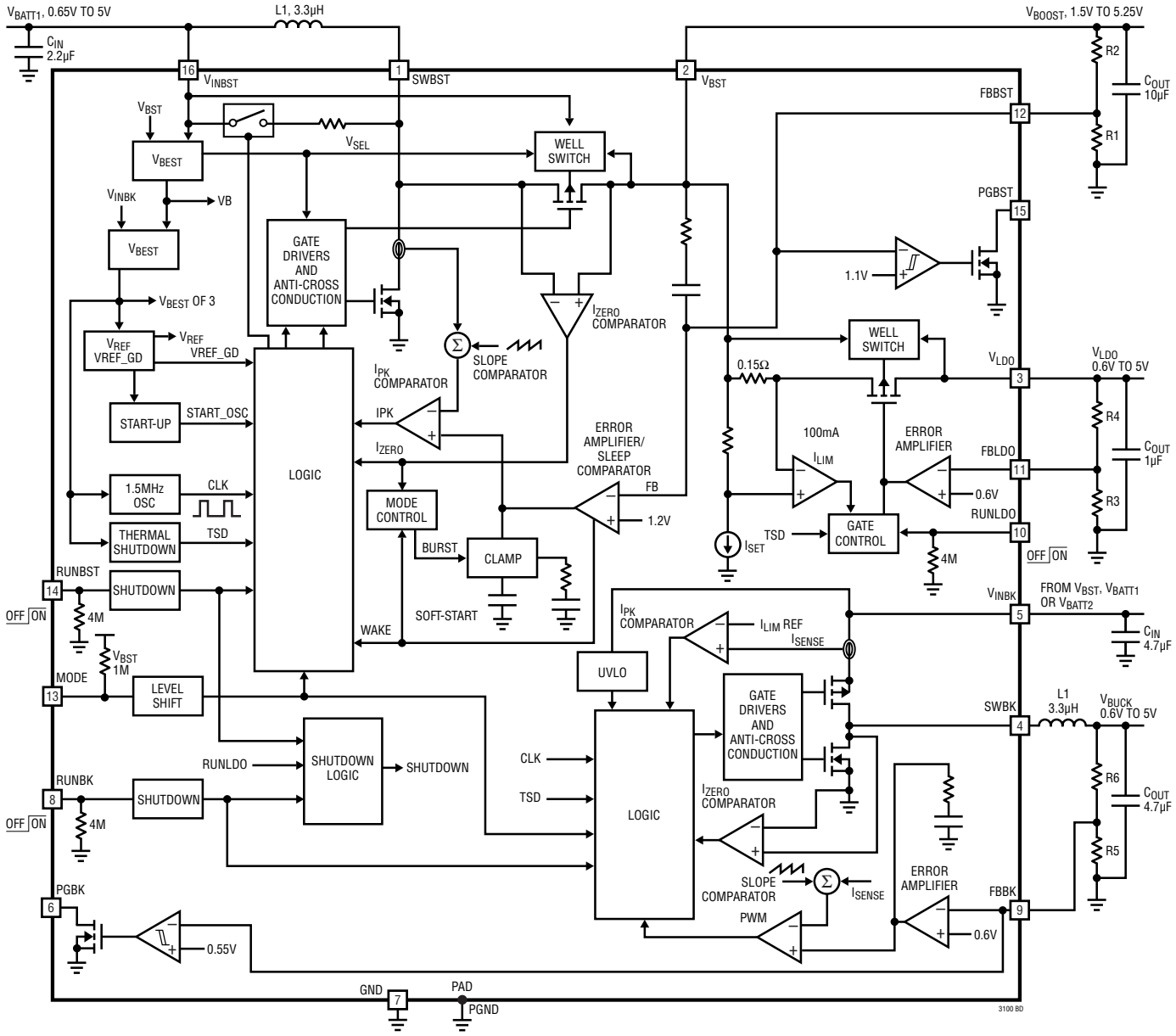

OPERATION

The LTC3100 includes an 700mA synchronous step-up (boost) converter, a 250mA synchronous step-down (buck) converter and a 100mA low dropout (LDO) linear regulator housed in a 16-lead 3mm ×3mm QFN package. Both converters utilize current mode PWM control for exceptional line and load regulation and operate from the same 1.5MHz oscillator. The current mode architecture with adaptive slope compensation also provides excellent transient load response, requiring minimal output filtering. Both converters have internal soft-start and internal loop compensation, simplifying the design process and minimizing the number of external components.

With its low $R_{DS(ON)}$ and low gate charge internal MOSFET switches and synchronous rectifiers, the LTC3100 achieves high efficiency over a wide range of load current. Burst Mode operation maintains high efficiency at very light loads, but can be disabled for noise-sensitive applications.

With separate power inputs for the boost and buck converters, along with independent enable and power good functions, the LTC3100 is very flexible. The two converters can operate from the same input supply, or from two different sources, or can even be cascaded by powering the buck converter from the output of the boost converter. By using the LDO as well, three different output voltages can be generated from a single alkaline/NiMH cell (or the LDO can be used for power sequencing the boost output).

Operation can be best understood by referring to the Block Diagram.

BOOST CONVERTER

Low Voltage Start-Up

The LTC3100 boost converter includes an independent start-up oscillator designed to start up at an input voltage of 0.65V (typical). Soft-start and inrush current limiting are provided during start-up, as well as in normal mode.

When either V_{INBST} or V_{BST} exceeds 1.4V (typical), the IC enters normal operating mode. Once the output voltage exceeds the input by 0.24V, the IC powers itself from V_{BST} instead of V_{INBST}. At this point, the internal circuitry has no dependency on the input voltage, eliminating the requirement for a large input capacitor. The limiting factor for the application becomes the ability of the power source to supply sufficient energy to the output at low input voltages, and maximum duty cycle of the converter, which is clamped at 90% (typical). Note that at low input voltages, even small input voltage drops due to series resistance become critical, and greatly limit the power delivery capability of the converter.

LOW NOISE FIXED FREQUENCY OPERATION

Soft-Start

The internal soft-start circuitry ramps the peak boost inductor current from zero to its peak value of 700mA in approximately 800µs, allowing start-up into heavy loads. The soft-start circuitry is reset in the event of a commanded shutdown or an overtemperature shutdown.

Oscillator

An internal oscillator sets the switching frequency to 1.5MHz. The oscillator allows a maximum duty cycle of 90% (typical) for the boost converter.

Shutdown

The boost converter is shut down by pulling the RUNBST pin below 0.3V, and activated by pulling the RUNBST pin above 0.9V. Note that RUNBST can be driven above V_{IN} or V_{OUT}, as long as it is limited to less than the absolute maximum rating.

Error Amplifier

The error amplifier is a transconductance type. The non-inverting input is internally connected to the 1.20V reference and the inverting input is connected to FBBST. Clamps limit the minimum and maximum error amp output voltage for improved large signal transient response. Power converter control loop compensation is provided internally. A voltage divider from V_{BST} to ground programs the output voltage (via FBBST) from 1.5V to 5.25V, according to the formula:

$$V_{BST} = 1.20V \bullet \left(1 + \frac{R2}{R1}\right)$$

OPERATION

Current Sensing

Lossless current sensing converts the peak current signal of the N-channel MOSFET switch into a voltage which is summed with the internal slope compensation. The summed signal is compared to the error amplifier output to provide a peak current control command for the PWM.

Current Limit

The current limit comparator shuts off the N-channel MOSFET switch once its threshold is reached. Peak switch current is no less than 700mA, independent of input or output voltage, unless V_{OUT} falls below 1V, in which case the current limit is cut in half to minimize power dissipation into a short-circuit.

Slope Compensation

Current mode control requires the use of slope compensation to prevent subharmonic oscillations in the inductor current waveform at high duty cycle operation. This is accomplished internally on the LTC3100 through the addition of a compensating ramp to the current sense signal. The LTC3100 performs current limiting prior to addition of the slope compensation ramp and therefore achieves a peak inductor current limit that is independent of duty cycle.

Zero Current Comparator

The zero current comparator monitors the boost inductor current to the output and shuts off the synchronous rectifier once this current reduces to approximately 30mA. This prevents the inductor current from reversing in polarity, improving efficiency at light loads.

Synchronous Rectifier

To control inrush current and to prevent the inductor current from running away when V_{OUT} is close to V_{IN}, the P-channel MOSFET synchronous rectifier is only fully enabled when $V_{OUT} > (V_{IN} + 0.24V)$.

Anti-Ringing Control

The anti-ring circuitry connects a resistor across the boost inductor to prevent high frequency ringing on the SW pin during discontinuous current mode operation. The ringing of the resonant circuit formed by L and C_{SW} (capacitance on SWBST pin) is low energy, but can cause EMI radiation.

PGOOD Comparator

The PGBST pin is an open-drain output which indicates the status of the boost converter output voltage. If the boost output voltage falls 8% below the regulation voltage, the PGBST open-drain output will pull low. The output voltage must rise 3% above the falling threshold before the pull-down will turn off. In addition, there is a 60µs (typical) deglitching delay in order to prevent false trips due to voltage transients on load steps. The PGBST output will also pull low if the boost converter is disabled. The typical PGBST pull-down switch resistance is 13Ω when V_{BST} or V_{INBST} equals 3.3V.

Output Disconnect

The LTC3100 boost converter is designed to allow true output disconnect by eliminating body diode conduction of the internal P-channel MOSFET rectifier. This allows for V_{OUT} to go to 0V during shutdown, drawing no current from the input source. It also allows for inrush current limiting at turn-on, minimizing surge currents seen by the input supply. Note that to obtain the advantages of output disconnect, there must not be an external Schottky diode connected between SWBST and V_{BST}. The output disconnect feature also allows V_{OUT} to be pulled high without any reverse current into the battery.

$V_{IN} > V_{OUT}$ Operation

The LTC3100 boost converter will maintain voltage regulation even when the input voltage is above the desired output voltage. Note that the output current capability is slightly reduced in this mode of operation. Refer to the Typical Performance Characteristics section.

Burst Mode Operation (for Boost and Buck Converters)

Burst Mode operation for both converters can be enabled or disabled using the MODE pin. If MODE is grounded, Burst Mode operation is disabled for both the boost and

OPERATION

buck converters. In this case, both converters will remain in fixed frequency operation, even at light load currents. If the load is very light, they will exhibit pulse-skip operation.

If MODE is raised above 0.9V, or left open, Burst Mode operation will be enabled for both converters. In this case, either converter may enter Burst Mode operation at light load, and return to fixed frequency operation when the load current increases. Refer to the Typical Performance Characteristics section to see the output load Burst Mode threshold vs V_{IN} and V_{OUT}. The two converters can enter or leave Burst Mode operation independent of each other.

In Burst Mode operation, each converter still switches at a frequency of 1.5MHz, using the same error amplifier and loop compensation for peak current mode control. This control method eliminates any output transient when switching between modes. In Burst Mode operation, energy is delivered to the output until it reaches the nominal regulation value, then the LTC3100 transitions to sleep mode where the outputs are off and the LTC3100 consumes only 15µA of quiescent current from V_{BST}. Once the output voltage has drooped slightly, switching resumes again. This maximizes efficiency at very light loads by minimizing switching and quiescent losses. Burst Mode operation output ripple is typically 1% peak-to-peak.

Burst Mode operation for the boost converter is inhibited during start-up, and until soft-start is complete and V_{BST} is at least 0.24V greater than V_{INBST}.

Short-Circuit Protection

The LTC3100 output disconnect feature allows output short-circuit while maintaining a maximum internally set current limit. To reduce power dissipation under short-circuit conditions, the boost peak switch current limit is reduced to 400mA (typical).

Schottky Diode

Although it is not required, adding a Schottky diode from SWBST to V_{BST} will improve efficiency by about 2%. Note that this defeats the boost output disconnect and short-circuit protection features.

BUCK CONVERTER OPERATION

The buck converter provides a high efficiency, lower voltage output and supports 100% duty cycle operation to extend battery life. The buck converter uses the same 1.5MHz oscillator used by the boost converter.

PWM Mode Operation

When the MODE pin is held low, the LTC3100 buck converter uses a constant-frequency, current mode control architecture. Both the main (P-channel MOSFET) and synchronous rectifier (N-channel MOSFET) switches are internal. At the start of each oscillator cycle, the P-channel switch is turned on and remains on until the current waveform with superimposed slope compensation ramp exceeds the error amplifier output. At this point, the synchronous rectifier is turned on and remains on until the inductor current falls to zero or a new switching cycle is initiated. As a result, the buck converter operates with discontinuous inductor current at light loads which improves efficiency. At extremely light loads, the minimum on-time of the main switch will be reached and the buck converter will begin turning off for multiple cycles (pulse-skipping) in order to maintain regulation.

Burst Mode Operation

When the MODE pin is forced high, or left open, the buck converter will automatically transition between Burst Mode operation at sufficiently light loads (below approximately 10mA) and PWM mode at heavier loads. Burst Mode operation entry is determined by the peak inductor current and therefore the load current at which Burst Mode operation will be entered depends on the input voltage, the output voltage and the inductor value. Typical curves for Burst Mode operation entry threshold are provided in the Typical Performance Characteristics section of this data sheet. The quiescent current on V_{INBK} in Burst Mode operation is only 15µA. If the boost converter is enabled and V_{INBST} or V_{BST} are at a higher potential than V_{INBK}, some of the quiescent current will be supplied by the boost converter, reducing the burst quiescent current on V_{INBK} to just 9µA.

OPERATION

Dropout Operation

As the input voltage decreases to a value approaching the output regulation voltage, the duty cycle increases toward the maximum on-time. Further reduction of the supply voltage will force the main switch to remain on for more than one cycle until 100% duty cycle operation is reached where the main switch remains on continuously. In this dropout state, the output voltage will be determined by the input voltage less the resistive voltage drop across the main switch and series resistance of the inductor.

Slope Compensation

Current mode control requires the use of slope compensation to prevent subharmonic oscillations in the inductor current waveform at high duty cycle operation. This is accomplished internally on the LTC3100 through the addition of a compensating ramp to the current sense signal. In some current mode ICs, current limiting is performed by clamping the error amplifier voltage to a fixed maximum. This leads to a reduced output current capability at low step-down ratios. In contrast, the LTC3100 performs current limiting prior to addition of the slope compensation ramp and therefore achieves a peak inductor current limit that is independent of duty cycle.

Short-Circuit Protection

When the buck output is shorted to ground, the error amplifier will saturate high and the P-channel MOSFET switch will turn on at the start of each cycle and remain on until the current limit trips. During this minimum on-time, the inductor current will increase rapidly and will decrease very slowly during the remainder of the period due to the very small reverse voltage produced by a hard output short. To eliminate the possibility of inductor current runaway in this situation, the buck converter switching frequency is reduced to approximately 375kHz when the voltage on FBBK falls below 0.3V.

Soft-Start

The buck converter has an internal voltage mode soft-start circuit with a nominal duration of 1.3ms. The converter remains in regulation during soft-start and will therefore respond to output load transients which occur during this time. In addition, the output voltage rise time has minimal dependency on the size of the output capacitor or load current.

Error Amplifier and Compensation

The LTC3100 buck converter utilizes an internal transconductance error amplifier. Compensation of the feedback loop is performed internally to reduce the size of the application circuit and simplify the design process. The compensation network has been designed to allow use of a wide range of output capacitors while simultaneously ensuring rapid response to load transients.

Undervoltage Lockout

If the V_{INBK} supply voltage decreases below 1.6V (typical), the buck converter will be disabled. The soft-start for the buck converter will be reset during undervoltage lockout to provide a smooth restart once the input voltage rises above the undervoltage lockout threshold.

PGOOD Comparator

The PGBK pin is an open-drain output which indicates the status of the buck converter output voltage. If the buck output voltage falls 8% below the regulation voltage, the PGBK open-drain output will pull low. The output voltage must rise 3% above the falling threshold before the pull-down will turn off. In addition, there is a 60µs typical deglitching delay in order to prevent false trips due to voltage transients on load steps. The PGBK output will also pull low during overtemperature shutdown and undervoltage lockout to indicate these fault conditions, or if the buck converter is disabled. The typical PGBK pull-down switch resistance is 13Ω when V_{INBK} = 3.3V.

Schottky Diode

Although it is not required, adding a Schottky diode from SWBK to the ground plane will improve efficiency by about 2%.

OPERATION

LDO REGULATOR OPERATION

The LDO regulator utilizes an internal 1.3Ω (typical) P-channel MOSFET pass device to supply up to 100mA of load current with a typical dropout voltage of 130mV. The input voltage to the LDO is internally connected to the boost output (V_{BST} pin), and can share the same filter capacitor. The LDO can be operated independently of the boost (or buck) converter, providing a sufficient voltage is present on V_{BST}.

Soft-Start and Current Limit

The LDO has an independent current limit circuit that limits output current to 120mA (typical). To minimize loading on the boost converter output when enabling the LDO, the LDO current limit is soft-started over a 500µs period. Therefore the rise time of the LDO output voltage will depend on the amount of capacitance on the V_{LDO} pin.

Reverse Current Blocking

The LDO is designed to prevent any reverse current from V_{LDO} back to the V_{BST} pin, both in normal operation and in shutdown. If V_{LDO} is pulled above V_{BST} and V_{BST} is above 1V, there will be a small (1µA typical) current from V_{LDO} to ground.

COMMON FUNCTIONS

Oscillator

The 1.5MHz oscillator is shared by the boost and buck converters. It will be oscillating if either converter is enabled. If both converters are enabled, the boost N-channel MOSFET switch will be turned on coincident with the buck P-channel MOSFET switch.

MODE Control

The MODE pin is used to force fixed frequency operation (MODE < 0.3V) or to enable Burst Mode operation (MODE > 0.9V) for both the boost and buck converters. With Burst Mode operation enabled, the two converters will automatically enter or leave Burst Mode operation independently, based on their respective load conditions. There is an internal 1MΩ pull-up on MODE, in the event that the pin is left open.

Note: Leaving the pin open, or connecting it to the highest of V_{INBK} or V_{BST}, will result in the lowest Burst Mode quiescent current.

Overtemperature Shutdown

If the die temperature exceeds 150°C (typical) both converters and the LDO regulator will be disabled. All power devices will be turned off and all switch nodes will be high impedance. The soft-start circuits for both converters and the LDO are reset during overtemperature shutdown to provide a smooth recovery once the overtemperature condition is eliminated. Both converters and the LDO will restart (if enabled) when the die temperature drops to approximately 130°C.

APPLICATIONS INFORMATION

PC Board Layout Guidelines

The LTC3100 switches large currents at high frequencies. Special care should be given to the PC board layout to ensure stable, noise-free operation. You will not get advertised performance with a careless layout. Figure 1 depicts the recommended PC board layout. A large ground pin copper area will help to lower the chip temperature. A multilayer board with a separate ground plane is ideal, but not absolutely necessary.

A few key guidelines follow:

1. All circulating high current paths should be kept as short as possible. Capacitor ground connections should via down to the ground plane in the shortest route possible. The bypass capacitors on all V_{IN} and V_{OUT} pins should be placed as close to the IC as possible and should have the shortest possible paths to ground.
2. To prevent large circulating currents from disrupting the output voltage sensing, the ground for each resistor divider should be returned directly to the ground plane near the IC.
3. Use of vias in the die attach pad of the IC will enhance the thermal environment of the converter, especially if the vias extend to a ground plane region on the exposed bottom surface of the PC board.
4. Keep the connection from the resistor dividers to the feedback pins as short as possible and away from the switch pin connections.

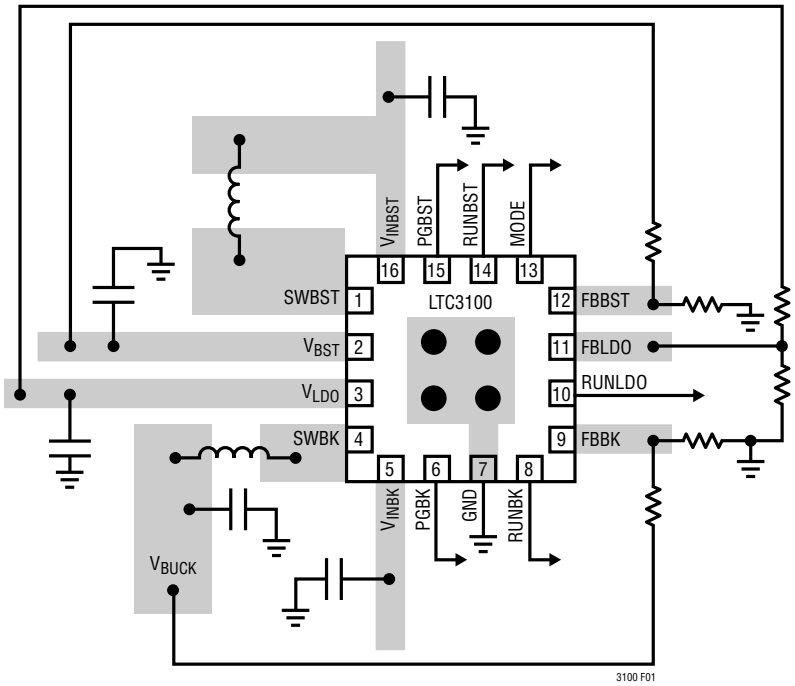

Figure 1. Recommended Component Placement for Two-Layer PC Board

APPLICATIONS INFORMATION

COMPONENT SELECTION

Boost Output Voltage Programming

The boost output voltage is set by a resistive divider according to the following formula:

$$V_{OUT} = 1.200V \bullet \left(1 + \frac{R2}{R1}\right)$$

The external divider is connected to the output as shown in the Block Diagram. A feedforward capacitor may be placed in parallel with resistor R2 to improve the noise immunity of the feedback node, improve transient response and reduce output ripple in Burst Mode operation. A value of 33pF will generally suffice.

Boost Inductor Selection

The LTC3100 boost converter can utilize small surface mount and chip inductors due to the fast 1.5MHz switching frequency. Inductor values between 2.2µH and 4.7µH are suitable for most applications. Larger values of inductance will allow slightly greater output current capability by reducing the inductor ripple current. Increasing the inductance above 10µH will increase size while providing little improvement in output current capability.

The minimum boost inductance value is given by:

$$L > \frac{V_{IN(MIN)} \bullet \left(V_{OUT(MAX)} - V_{IN(MIN)}\right)}{1.5 \bullet RIPPLE \bullet V_{OUT(MAX)}}$$

Where:

RIPPLE = Allowable Inductor Current Ripple (Amps Peak-to-Peak)

$V_{IN(MIN)}$ = Minimum Input Voltage

$V_{OUT(MAX)}$ = Maximum Output Voltage

The inductor current ripple is typically set for 20% to 40% of the maximum inductor current. High frequency ferrite core inductor materials reduce frequency dependent power losses compared to cheaper powdered iron types, improving efficiency. The inductor should have low DCR (series resistance of the winding) to reduce the I^2R power losses, and must not saturate at peak inductor current levels. Molded chokes and some chip inductors usually do not have enough core area to support the peak inductor currents of 800mA seen on the LTC3100. To minimize radiated noise, use a shielded inductor. See Table 1 for suggested components and suppliers.

Table 1. Recommended Boost Inductors

VENDOR	PART/STYLE
Coilcraft (847) 639-6400 www.coilcraft.com	LPS4012, LPS4018 MSS4020, MSS5131
Coiltronics	SD14, SD3814, SD3118
FDK	MIPSA2520 MIPW3226
Murata www.murata.com	LQH43C
Sumida (847) 956-0666 www.sumida.com	CDRH2D18, CDRH2D16 CDRH3D14, CDRH3D16 CDRH4D14, CDRH4D16
Taiyo-Yuden www.t-yuden.com	NR3015 NP03SB
TDK www.tdk.com	VLP VLF, VLCF
Toko (408) 432-8282 www.tokoam.com	D518LC D52LC DP418C
Würth (201) 785-8800 www.we-online.com	WE-TPC Type S, M

Boost Input and Output Capacitor Selection

The internal loop compensation of the LTC3100 boost converter is designed to be stable with output capacitor values of 4.7µF or greater. Low ESR (equivalent series resistance) capacitors should be used to minimize the output voltage ripple. Multilayer ceramic capacitors are an excellent choice as they have extremely low ESR and are available in small footprints. A 4.7µF to 10µF output capacitor is sufficient for most fixed frequency applications. For applications where Burst Mode operation is enabled, a minimum value of 20µF is recommended. Larger values may be used to obtain very low output ripple and to improve transient response. X5R and X7R dielectric materials are preferred for their ability to maintain capacitance over wide voltage and temperature ranges. Y5V types should not be used. Case sizes smaller than 0805 are not recommended due to their increased DC bias effect.

APPLICATIONS INFORMATION

Low ESR input capacitors reduce input switching noise and reduce the peak current drawn from the battery. It follows that ceramic capacitors are also a good choice for input decoupling and should be located as close as possible to the device. A 2.2µF input capacitor on the V_{INBST} pin is sufficient for most applications. Larger values may be used without limitations. For applications where the power source is more than a few inches away, a larger bulk decoupling capacitor is recommended on the input to the boost converter.

Table 2 shows a list of several ceramic capacitor manufacturers. Consult the manufacturers directly for detailed information on their selection of capacitors.

Note that even X5R and X7R type ceramic capacitors have a DC bias effect which reduces their capacitance with a DC voltage applied. This effect is particularly bad for capacitors in the smallest case sizes. Consult the manufacturer's data for the capacitor you select to be assured of having the necessary capacitance in your application.

Table 2.Capacitor Vendor Information

SUPPLIER	PHONE	WEB SITE
AVX	(803) 448-9411	www.avxcorp.com
Murata	(714) 852-2001	www.murata.com
Taiyo-Yuden	(408) 573-4150	www.t-yuden.com
TDK	(847) 803-6100	www.component.tdk.com

Buck Inductor Selection

The choice of buck inductor value influences both the efficiency and the magnitude of the output voltage ripple. Larger inductance values will reduce inductor current ripple and will therefore lead to lower output voltage ripple. For a fixed DC resistance, a larger value inductor will yield higher efficiency by lowering the peak current to be closer to the average. However, a larger value inductor within the same family will generally have a greater series resistance, thereby offsetting this efficiency advantage. Given a desired peak to peak current ripple, ΔI_L, the required inductance can be calculated via the following expression, where f represents the switching frequency in MHz:

$$L = \frac{1}{f\Delta I_L} \bullet \left(1 - \frac{V_{OUT}}{V_{IN}}\right) (\mu H)$$

A reasonable choice for ripple current is ΔI_L = 100mA which represents 40% of the maximum 250mA load current. The DC current rating of the inductor should be at least 450mA to avoid saturation under overload or short-circuit conditions. To optimize efficiency the inductor should have a low series resistance. In particularly space restricted applications it may be advantageous to use a much smaller value inductor at the expense of larger ripple current. In such cases, the converter will operate in discontinuous conduction for a wider range of output loads and efficiency will be reduced.

In addition, there is a minimum inductor value required to maintain stability of the current loop (given the fixed internal slope compensation). Specifically, if the buck converter is going to be utilized at duty cycles over 40%, the inductance value must be at least L_{MIN} as given by the following equation:

$$L_{MIN} = 2.5 \bullet V_{OUT}\ (\mu H)$$

Table 3 depicts the minimum required inductance for several common output voltages.

Table 3.Buck Minimum Inductance

OUTPUT VOLTAGE	MINIMUM INDUCTANCE
0.6V	1.5µH
0.8V	2µH
1.2V	3µH
2V	5µH
2.7V	6.8µH
3.3V	8.3µH

Larger values of inductor will also provide slightly greater output current capability before reaching current limit (by reducing the peak-to-peak ripple current).

APPLICATIONS INFORMATION

Table 4. Recommended Buck Inductors

VENDOR	PART/STYLE
Coilcraft (847) 639-6400 www.coilcraft.com	LPS3008, LPS3010, LPS3015
Coiltronics	SD3114, SD3118, SD3112
FDK	MIPF2016 MIPF2520, MIPS2520
Murata www.murata.com	LQH32C LQM31P
Sumida (847) 956-0666 www.sumida.com	CDRH2D11, CDRH2D09 CMD4D06-4R7MC CMD4D06-3R3MC
Taiyo-Yuden www.t-yuden.com	NR3010, NR3012
TDK www.tdk.com	VLF3010, VLF3012 LEMC3225, LBC2518
Toko (408) 432-8282 www.tokoam.com	D3010 DB3015 D312, D301F
Würth (201) 785-8800 www.we-online.com	WE-TPC Type XS, S

Buck Output Capacitor Selection

A low ESR output capacitor should be utilized at the buck output in order to minimize voltage ripple. Multilayer ceramic capacitors are an excellent choice as they have low ESR and are available in small footprints. In addition to controlling the output ripple magnitude, the value of the output capacitor also sets the loop crossover frequency and therefore can impact loop stability. There is both a minimum and maximum capacitance value required to ensure stability of the loop. If the output capacitance is too small, the loop crossover frequency will increase to the point where switching delay and the high frequency parasitic poles of the error amplifier will degrade the phase margin. In addition, the wider bandwidth produced by a small output capacitor will make the loop more susceptible to switching noise. At the other extreme, if the output capacitor is too large, the crossover frequency can decrease too far below the compensation zero and also lead to degraded phase margin. Table 5 provides a guideline for the range of allowable values of low ESR output capacitors. Larger value output capacitors can be accommodated provided they have sufficient ESR to stabilize the loop or by increasing the value of the feedforward capacitor in parallel with the upper resistor divider resistor.

Note that even X5R and X7R type ceramic capacitors have a DC bias effect which reduces their capacitance with a DC voltage applied. This effect is particularly bad for capacitors in the smallest case sizes. Consult the manufacturer's data for the capacitor you select to be assured of having the necessary capacitance in your application.

Table 5. Buck Output Capacitor Range

V_{OUT}	C_{MIN}	C_{MAX}
0.6V	15µF	300µF
0.8V	15µF	230µF
1.2V	10µF	150µF
1.8V	6.8µF	90µF
2.7V	6.8µF	70µF
3.3V	6.8µF	50µF

Buck Input Capacitor Selection

The V_{INBK} pin provides current to the buck converter power switch and is also the supply pin for the buck's internal control circuitry. It is recommended that a low ESR ceramic capacitor with a value of at least 4.7µF be used to bypass this pin. The capacitor should be placed as close to the pin as possible and have a short return to ground. For applications where the power source is more than a few inches away, a larger bulk decoupling capacitor is recommended.

Buck Output Voltage Programming

The output voltage is set by a resistive divider according to the following formula:

$$V_{OUT} = 0.600V \bullet \left(1 + \frac{R6}{R5}\right)$$

The external divider is connected to the output as shown in the Block Diagram. It is recommended that a feedforward capacitor be placed in parallel with resistor R6 to improve the noise immunity of the feedback node and reduce output ripple in Burst Mode operation. A value of 10pF will generally suffice.

APPLICATIONS INFORMATION

LDO Output Capacitor Selection

The LDO is designed to be stable with a minimum 1µF output capacitor. No series resistor is required when using low ESR capacitors. For most applications, a 2.2µF ceramic capacitor is recommended. Larger values will improve transient response, and raise the power supply rejection ratio (PSRR) of the LDO. Refer to the Typical Performance Characteristics for the allowable range of output capacitor to ensure loop stability.

LDO Output Voltage Programming

The output voltage is set by a resistive divider according to the following formula:

$$V_{OUT} = 0.600V \bullet \left(1 + \frac{R4}{R3}\right)$$

The external divider is connected to the output as shown in the Block Diagram. For improved transient response, a feedforward capacitor may be placed in parallel with resistor R4.

TYPICAL APPLICATIONS

Single-Cell Boost and Buck with Voltage Sequencing

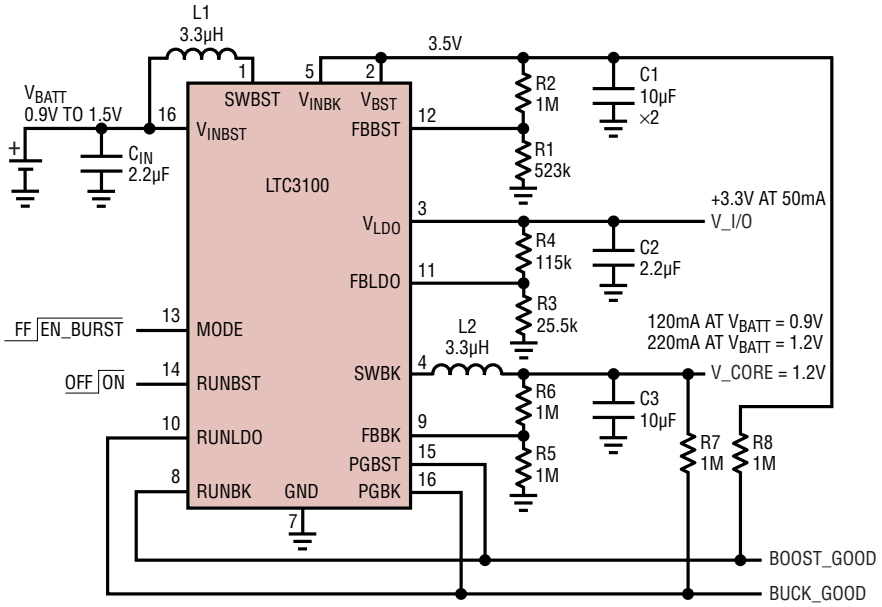

Output Voltages During Soft-Start for Sequenced Converter

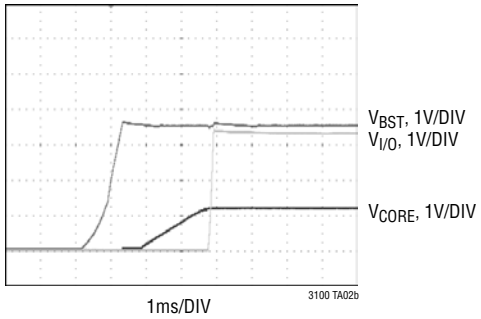

Li-Ion Input, Triple Output Converter

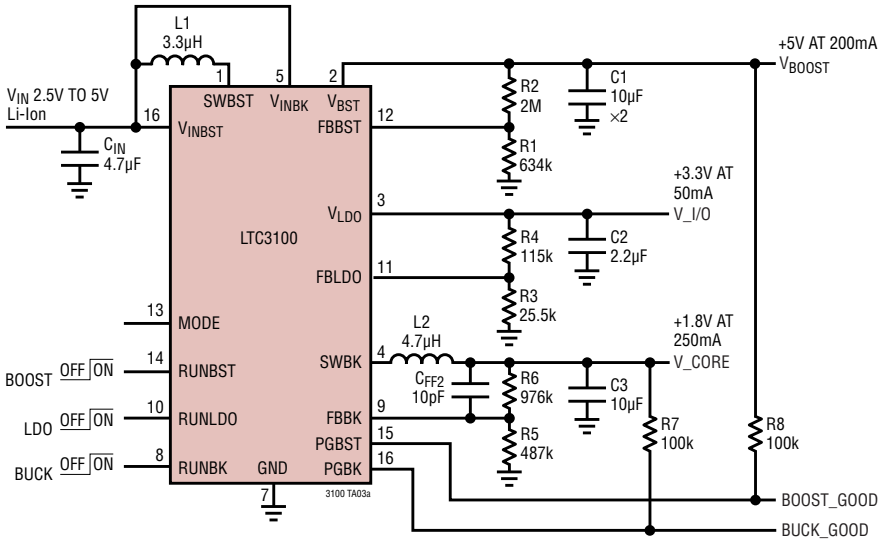

Efficiency vs Load Current

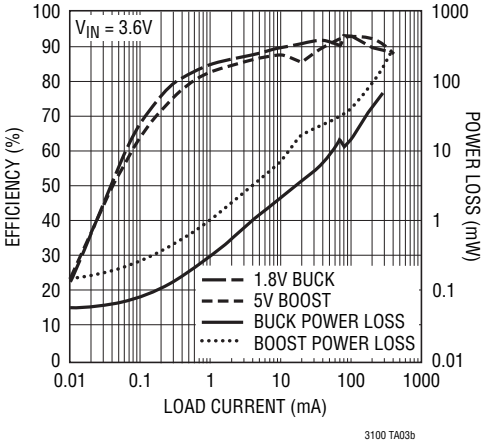

TYPICAL APPLICATIONS

Single-Cell/Two-Cell or USB Input to 3.3V/1.8V Converter

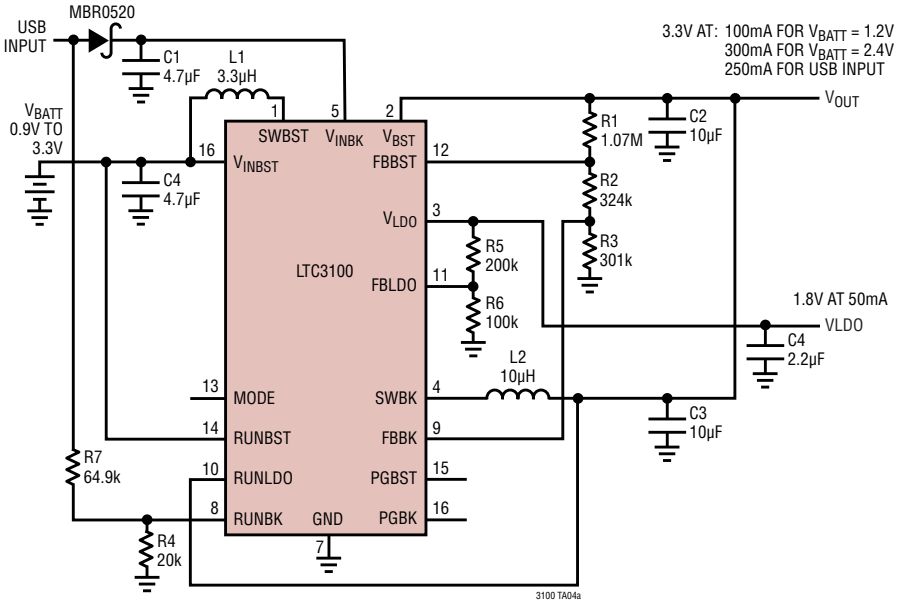

Efficiency vs Load Current

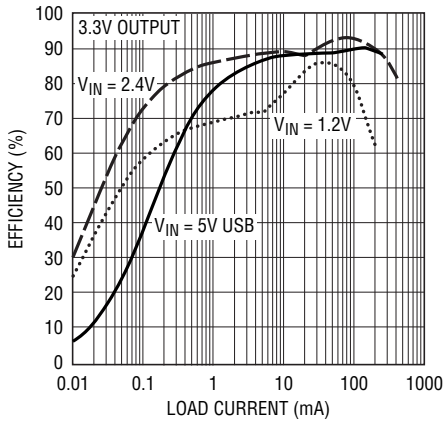

PACKAGE DESCRIPTION

UD Package
16-Lead Plastic QFN (3mm × 3mm)
(Reference LTC DWG # 05-08-1691 Rev Ø)

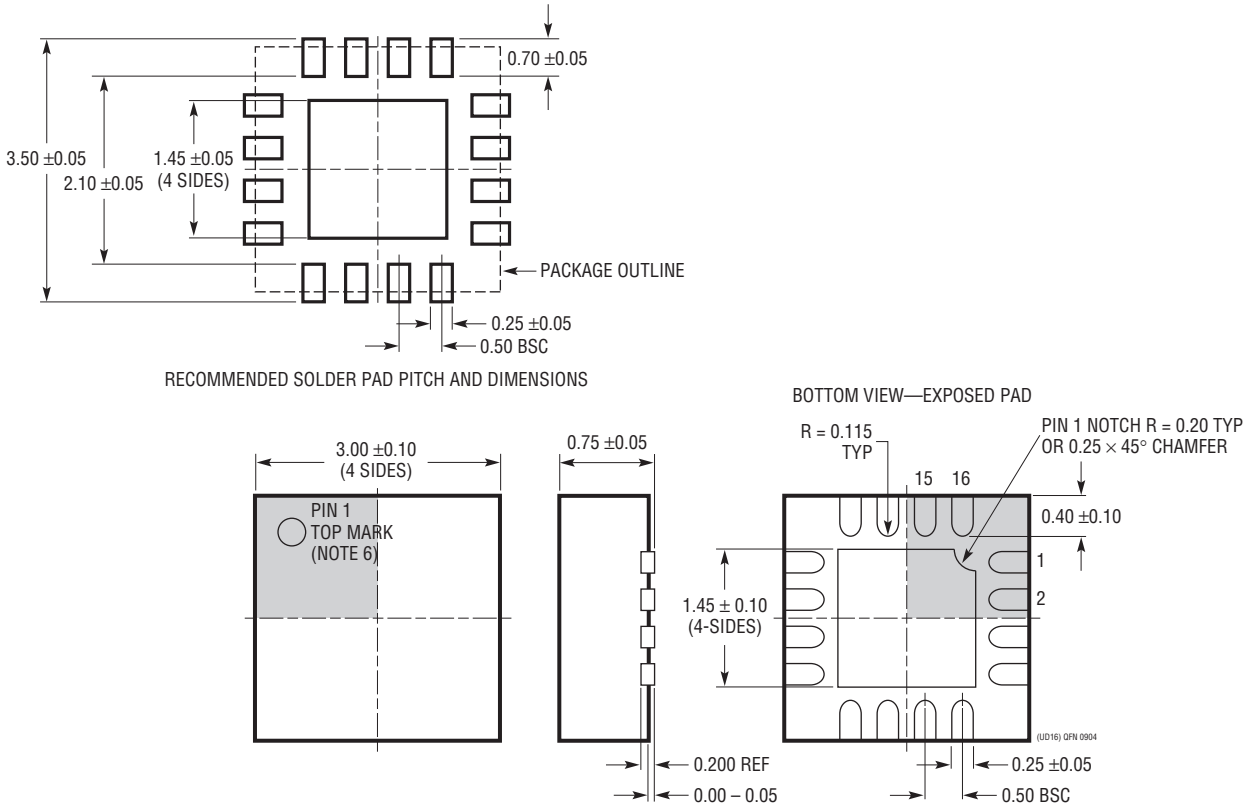

NOTE:
1. DRAWING CONFORMS TO JEDEC PACKAGE OUTLINE MO-220 VARIATION (WEED-2)
2. DRAWING NOT TO SCALE
3. ALL DIMENSIONS ARE IN MILLIMETERS
4. DIMENSIONS OF EXPOSED PAD ON BOTTOM OF PACKAGE DO NOT INCLUDE MOLD FLASH. MOLD FLASH, IF PRESENT, SHALL NOT EXCEED 0.15mm ON ANY SIDE
5. EXPOSED PAD SHALL BE SOLDER PLATED
6. SHADED AREA IS ONLY A REFERENCE FOR PIN 1 LOCATION ON THE TOP AND BOTTOM OF PACKAGE

REVISION HISTORY (Revision history begins at Rev B)

REV	DATE	DESCRIPTION	PAGE NUMBER
B	01/14	Change Maximum Duty Cycle minimum specification	3

Information furnished by Linear Technology Corporation is believed to be accurate and reliable. However, no responsibility is assumed for its use. Linear Technology Corporation makes no representation that the interconnection of its circuits as described herein will not infringe on existing patent rights.

TYPICAL APPLICATION

Single-Cell to 1.2V/1.8V Converter

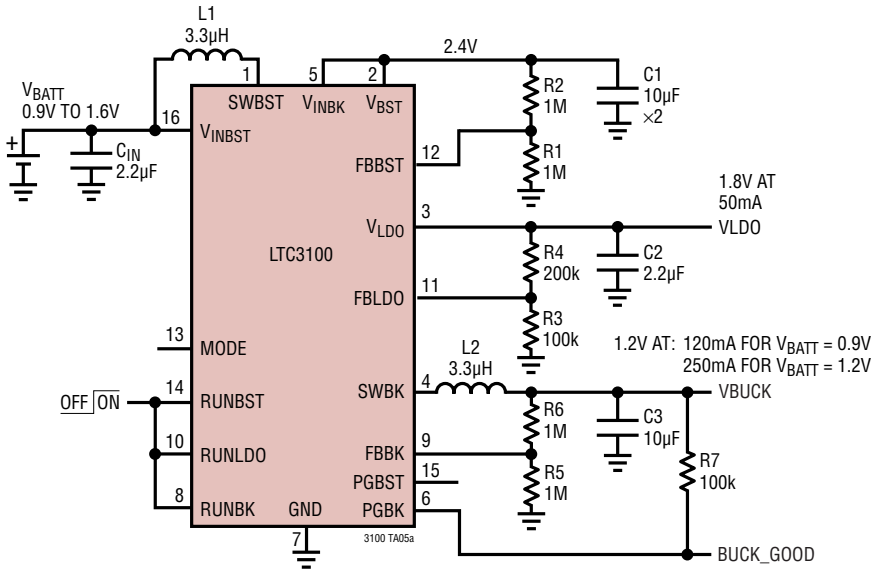

Efficiency vs Load Current (V_{BUCK})

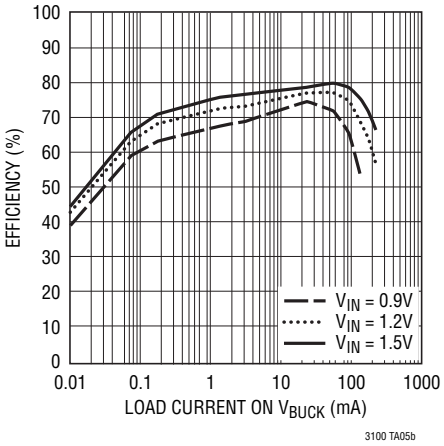

RELATED PARTS

PART NUMBER	DESCRIPTION	COMMENTS
LTC3442	1.2A (I_{OUT}), 2MHz Synchronous Buck-Boost DC/DC Converter	V_{IN}: 2.4V to 5.5V, $V_{OUT(RANGE)}$: 2.4V to 5.25V, I_Q = 35µA, I_{SD} < 1µA, DFN Package
LTC3455	Dual DC/DC Converter with USB Power Manager and Li-Ion Battery Charger	96% Efficiency, Seamless Transition Between Inputs, I_Q = 110µA, I_{SD} < 2µA, QFN Package
LTC3456	2-Cell Multi-Output DC/DC Converter with USB Power Manager	92% Efficiency, Seamless Transition Between Inputs, I_Q = 180µA, I_{SD} < 1µA, QFN Package
LTC3520	Synchronous 1A Buck-Boost and 600mA Step-Down DC/DC Converter	V_{IN}: 2.2V to 5.5V, $V_{OUT(MIN)}$ = 0.6V, I_Q = 55µA, I_{SD} < 1µA, 4mm × 4mm QFN Package
LTC3522	Synchronous 400mA Buck-Boost and 200mA Step-Down DC/DC Converter	V_{IN}: 2.4V to 5.5V, $V_{OUT(MIN)}$ = 0.6V, I_Q = 25µA, I_{SD} < 1µA, 3mm × 3mm QFN-16 Package
LTC3527/LTC3527-1	Dual (400mA/800mA) Synchronous Boost Converter	V_{IN}: 0.5V to 5V, V_{OUT}: 1.5V to 5.25V, I_Q = 12µA, I_{SD} < 2µA, 3mm × 3mm QFN Package
LTC3530	600mA (I_{OUT}), 2MHz Synchronous Buck-Boost DC/DC Converter	V_{IN}: 1.8V to 5.5V, $V_{OUT(RANGE)}$: 1.8V to 5.5V, I_Q = 40µA, I_{SD} < 1µA, DFN and MSOP Packages
LTC3532	500mA (I_{OUT}), 2MHz Synchronous Buck-Boost DC/DC Converter	V_{IN}: 2.4V to 5.5V, $V_{OUT(RANGE)}$: 2.4V to 5.25V, I_Q = 35µA, I_{SD} < 1µA, DFN and MSOP Packages
LTC3537	600mA (I_{SW}), 2.2MHz Synchronous Boost Converter with 100mA LDO	V_{IN}: 0.68V to 5V, $V_{OUT(MAX)}$ = 5.5V, I_Q = 30µA, I_{SD} < 1µA, 3mm × 3mm QFN Package
LTC3538	600mA (I_{OUT}), 2MHz Synchronous Buck-Boost DC/DC Converter	V_{IN}: 2.4V to 5.5V, $V_{OUT(RANGE)}$: 1.5V to 5.5V, I_Q = 35µA, I_{SD} < 1µA, DFN Package
LTC3544/LTC3544B	300mA, 200mA ×2, 100mA, 2.25MHz Quad Output Synchronous Step-Down DC/DC Converter	V_{IN}: 2.25V to 5.5V, $V_{OUT(MIN)}$ = 0.8V, I_Q = 70µA, I_{SD} < 1µA, QFN Package
LTC3545	Triple Output, 3mA × 800mA, 2.25MHz Synchronous Step-Down DC/DC Converter	V_{IN}: 2.25V to 5.5V, $V_{OUT(MIN)}$ = 0.6V, I_Q = 58µA, I_{SD} < 1µA, QFN Package

Linear Technology Corporation
1630 McCarthy Blvd., Milpitas, CA 95035-7417
(408) 432-1900 • FAX: (408) 434-0507 • www.linear.com/LTC3100

LT 0114 REV B • PRINTED IN USA

© LINEAR TECHNOLOGY CORPORATION 2008

Looking for pricing, stock, or lifecycle information?

Click below to explore more details on WIN SOURCE:

- View LTC3100EUD#PBF on WIN SOURCE
- Linear Technology Information

Optimize Your Supply Chain with WIN SOURCE Solutions

- Global Sourcing Solution
- Obsolete Management
- Cost Control Management
- Shortage Management
- Alternative Solution
- Excess Inventory Management