THE DATASHEET OF

LTC1778IGN#PBF

www.win-source.net 0086-755-83957316

Wide Operating Range, No R_{SENSE}™ Step-Down Controller

FEATURES

- **No Sense Resistor Required**
- **True Current Mode Control**
- **Optimized for High Step-Down Ratios**
- **$t_{ON(MIN)} \leq$ 100ns**
- **Extremely Fast Transient Response**
- **Stable with Ceramic C_{OUT}**
- Dual N-Channel MOSFET Synchronous Drive
- Power Good Output Voltage Monitor (LTC1778)
- Adjustable On-Time (LTC1778-1)
- Wide V_{IN} Range: 4V to 36V
- ±1% 0.8V Voltage Reference
- Adjustable Current Limit
- Adjustable Switching Frequency
- Programmable Soft-Start
- Output Overvoltage Protection
- Optional Short-Circuit Shutdown Timer
- Micropower Shutdown: I_Q < 30μA
- Available in a 16-Pin Narrow SSOP Package

APPLICATIONS

- Notebook and Palmtop Computers
- Distributed Power Systems

DESCRIPTION

The LTC®1778 is a synchronous step-down switching regulator controller optimized for CPU power. The controller uses a valley current control architecture to deliver very low duty cycles with excellent transient response without requiring a sense resistor. Operating frequency is selected by an external resistor and is compensated for variations in V_{IN}.

Discontinuous mode operation provides high efficiency operation at light loads. A forced continuous control pin reduces noise and RF interference, and can assist secondary winding regulation by disabling discontinuous operation when the main output is lightly loaded.

Fault protection is provided by internal foldback current limiting, an output overvoltage comparator and optional short-circuit shutdown timer. Soft-start capability for supply sequencing is accomplished using an external timing capacitor. The regulator current limit level is user programmable. Wide supply range allows operation from 4V to 36V at the input and from 0.8V up to (0.9)V_{IN} at the output.

LT, LTC and LT are registered trademarks of Linear Technology Corporation.
No R_{SENSE} is a trademark of Linear Technology Corporation.
All other trademarks are the property of their respective owners.
Protected by U.S. Patents, including 5481178, 6100678, 6580258, 5847554, 6304066

TYPICAL APPLICATION

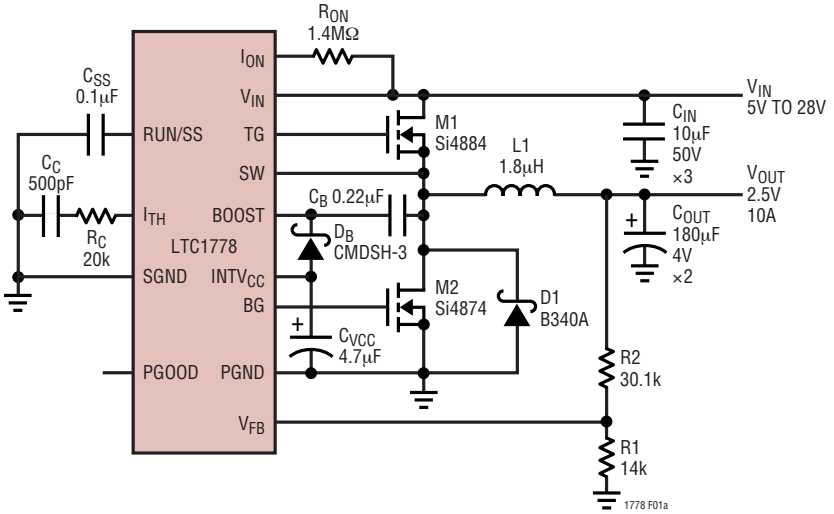

Figure 1. High Efficiency Step-Down Converter

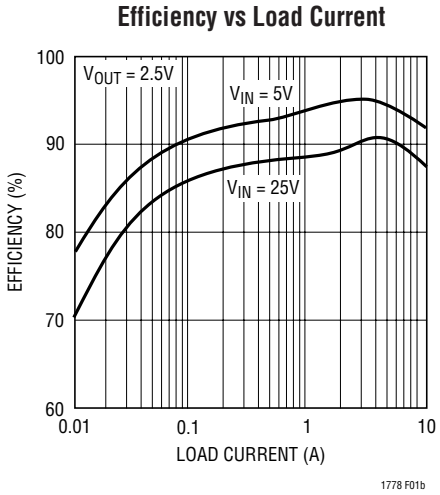

ABSOLUTE MAXIMUM RATINGS (Note 1)

Input Supply Voltage (V_{IN}, I_{ON}) ..... 36V to –0.3V
Boosted Topside Driver Supply Voltage
(BOOST) ..... 42V to –0.3V
SW Voltage ..... 36V to –5V
$EXTV_{CC}$, (BOOST – SW), RUN/SS,
PGOOD Voltages ..... 7V to –0.3V
FCB, V_{ON}, V_{RNG} Voltages ..... $INTV_{CC}$ + 0.3V to –0.3V
I_{TH}, V_{FB} Voltages ..... 2.7V to –0.3V

TG, BG, $INTV_{CC}$, $EXTV_{CC}$ Peak Currents 2A
TG, BG, $INTV_{CC}$, $EXTV_{CC}$ RMS Currents 50mA
Operating Ambient Temperature Range (Note 4)
LTC1778E ..... –40°C to 85°C
LTC1778I ..... –40°C to 125°C
Junction Temperature (Note 2) ..... 125°C
Storage Temperature Range ..... –65°C to 150°C
Lead Temperature (Soldering, 10 sec) ..... 300°C

PACKAGE/ORDER INFORMATION

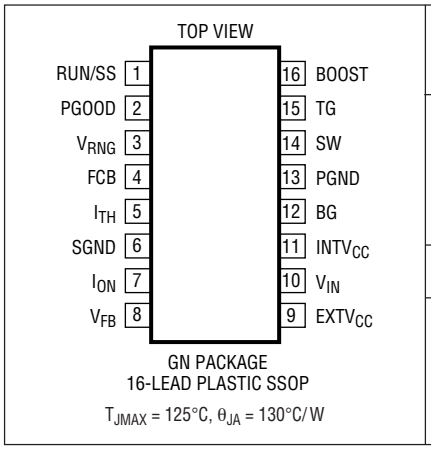

GN PACKAGE
16-LEAD PLASTIC SSOP
T_{JMAX} = 125°C, θ_{JA} = 130°C/W

ORDER PART NUMBER	GN PART MARKING
LTC1778EGN LTC1778IGN	1778 1778I

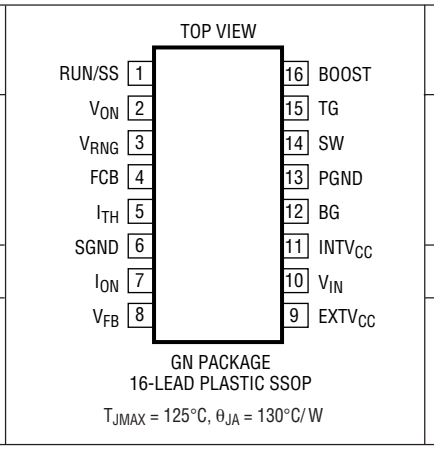

GN PACKAGE
16-LEAD PLASTIC SSOP
T_{JMAX} = 125°C, θ_{JA} = 130°C/W

ORDER PART NUMBER	GN PART MARKING
LTC1778EGN-1	17781

Consult LTC Marketing for parts specified with wider operating temperature ranges.

ELECTRICAL CHARACTERISTICS

The ● denotes specifications which apply over the full operating temperature range, otherwise specifications are T_A = 25°C. V_{IN} = 15V unless otherwise noted.

SYMBOL	PARAMETER	CONDITIONS		MIN	TYP	MAX	UNITS
Main Control Loop							
I_Q	Input DC Supply Current Normal Shutdown Supply Current				 900 15	 2000 30	 µA µA
V_{FB}	Feedback Reference Voltage	I_{TH} = 1.2V (Note 3) LTC1778E I_{TH} = 1.2V (Note 3) LTC1778I	● ●	0.792 0.792	0.800 0.800	0.808 0.812	V V
$\Delta V_{FB(LINEREG)}$	Feedback Voltage Line Regulation	V_{IN} = 4V to 30V, I_{TH} = 1.2V (Note 3)			0.002		%/V
$\Delta V_{FB(LOADREG)}$	Feedback Voltage Load Regulation	I_{TH} = 0.5V to 1.9V (Note 3)	●		–0.05	–0.3	%
I_{FB}	Feedback Input Current	V_{FB} = 0.8V			–5	±50	nA
$g_{m(EA)}$	Error Amplifier Transconductance	I_{TH} = 1.2V (Note 3)	●	1.4	1.7	2	mS
V_{FCB}	Forced Continuous Threshold		●	0.76	0.8	0.84	V
I_{FCB}	Forced Continuous Pin Current	V_{FCB} = 0.8V			–1	–2	µA
t_{ON}	On-Time	I_{ON} = 30µA, V_{ON} = 0V (LTC1778-1) I_{ON} = 15µA, V_{ON} = 0V (LTC1778-1)		198 396	233 466	268 536	ns ns
$t_{ON(MIN)}$	Minimum On-Time	I_{ON} = 180µA			50	100	ns

ELECTRICAL CHARACTERISTICS

The ● denotes specifications which apply over the full operating temperature range, otherwise specifications are T_A = 25°C. V_{IN} = 15V unless otherwise noted.

SYMBOL	PARAMETER	CONDITIONS		MIN	TYP	MAX	UNITS
$t_{OFF(MIN)}$	Minimum Off-Time	I_{ON} = 30μA			250	400	ns
$V_{SENSE(MAX)}$	Maximum Current Sense Threshold $V_{PGND} – V_{SW}$	V_{RNG} = 1V, V_{FB} = 0.76V V_{RNG} = 0V, V_{FB} = 0.76V V_{RNG} = $INTV_{CC}$, V_{FB} = 0.76V	● ● ●	113 79 158	133 93 186	153 107 214	mV mV mV
$V_{SENSE(MIN)}$	Minimum Current Sense Threshold $V_{PGND} – V_{SW}$	V_{RNG} = 1V, V_{FB} = 0.84V V_{RNG} = 0V, V_{FB} = 0.84V V_{RNG} = $INTV_{CC}$, V_{FB} = 0.84V			–67 –47 –93		mV mV mV
$\Delta V_{FB(OV)}$	Output Overvoltage Fault Threshold			5.5	7.5	9.5	%
$V_{FB(UV)}$	Output Undervoltage Fault Threshold			520	600	680	mV
$V_{RUN/SS(ON)}$	RUN Pin Start Threshold		●	0.8	1.5	2	V
$V_{RUN/SS(LE)}$	RUN Pin Latchoff Enable Threshold	RUN/SS Pin Rising			4	4.5	V
$V_{RUN/SS(LT)}$	RUN Pin Latchoff Threshold	RUN/SS Pin Falling			3.5	4.2	V
$I_{RUN/SS(C)}$	Soft-Start Charge Current	$V_{RUN/SS}$ = 0V		–0.5	–1.2	–3	μA
$I_{RUN/SS(D)}$	Soft-Start Discharge Current	$V_{RUN/SS}$ = 4.5V, V_{FB} = 0V		0.8	1.8	3	μA
$V_{IN(UVLO)}$	Undervoltage Lockout	V_{IN} Falling	●		3.4	3.9	V
$V_{IN(UVLOR)}$	Undervoltage Lockout Release	V_{IN} Rising	●		3.5	4	V
TG R_{UP}	TG Driver Pull-Up On Resistance	TG High			2	3	Ω
TG R_{DOWN}	TG Driver Pull-Down On Resistance	TG Low			2	3	Ω
BG R_{UP}	BG Driver Pull-Up On Resistance	BG High			3	4	Ω
BG R_{DOWN}	BG Driver Pull-Down On Resistance	BG Low			1	2	Ω
TG t_r	TG Rise Time	C_{LOAD} = 3300pF			20		ns
TG t_f	TG Fall Time	C_{LOAD} = 3300pF			20		ns
BG t_r	BG Rise Time	C_{LOAD} = 3300pF			20		ns
BG t_f	BG Fall Time	C_{LOAD} = 3300pF			20		ns
Internal V_{CC} Regulator							
V_{INTVCC}	Internal V_{CC} Voltage	6V < V_{IN} < 30V, V_{EXTVCC} = 4V	●	4.7	5	5.3	V
$\Delta V_{LDO(LOADREG)}$	Internal V_{CC} Load Regulation	I_{CC} = 0mA to 20mA, V_{EXTVCC} = 4V			–0.1	±2	%
V_{EXTVCC}	$EXTV_{CC}$ Switchover Voltage	I_{CC} = 20mA, V_{EXTVCC} Rising	●	4.5	4.7		V
ΔV_{EXTVCC}	$EXTV_{CC}$ Switch Drop Voltage	I_{CC} = 20mA, V_{EXTVCC} = 5V			150	300	mV
$\Delta V_{EXTVCC(HYS)}$	$EXTV_{CC}$ Switchover Hysteresis				200		mV
PGOOD Output (LTC1778 Only)							
ΔV_{FBH}	PGOOD Upper Threshold	V_{FB} Rising		5.5	7.5	9.5	%
ΔV_{FBL}	PGOOD Lower Threshold	V_{FB} Falling		–5.5	–7.5	–9.5	%
$\Delta V_{FB(HYS)}$	PGOOD Hysteresis	V_{FB} Returning			1	2	%
V_{PGL}	PGOOD Low Voltage	I_{PGOOD} = 5mA			0.15	0.4	V

Note 1: Absolute Maximum Ratings are those values beyond which the life of a device may be impaired.

Note 2: T_J is calculated from the ambient temperature T_A and power dissipation P_D as follows:

LTC1778E: $T_J = T_A + (P_D \bullet 130°C/W)$

Note 3: The LTC1778 is tested in a feedback loop that adjusts V_{FB} to achieve a specified error amplifier output voltage (I_{TH}).

Note 4: The LTC1778E is guaranteed to meet performance specifications from 0°C to 70°C. Specifications over the –40°C to 85°C operating temperature range are assured by design, characterization and correlation with statistical process controls. The LTC1778I is guaranteed over the full –40°C to 125°C operating temperature range.

TYPICAL PERFORMANCE CHARACTERISTICS

Transient Response

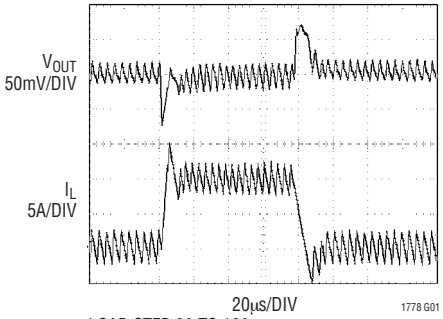

LOAD STEP 0A TO 10A
V_{IN} = 15V
V_{OUT} = 2.5V
FCB = 0V
FIGURE 9 CIRCUIT

Transient Response (Discontinuous Mode)

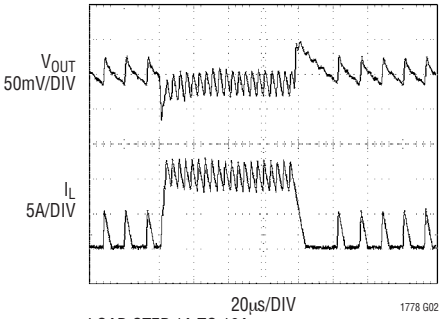

LOAD STEP 1A TO 10A
V_{IN} = 15V
V_{OUT} = 2.5V
FCB = $INTV_{CC}$
FIGURE 9 CIRCUIT

Start-Up

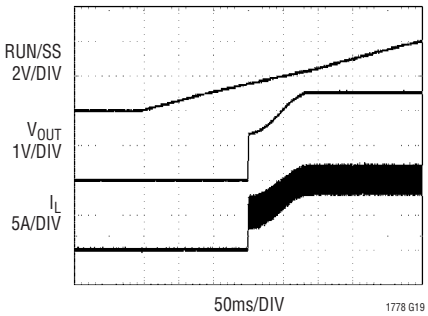

V_{IN} = 15V
V_{OUT} = 2.5V
R_{LOAD} = 0.25Ω

Efficiency vs Load Current

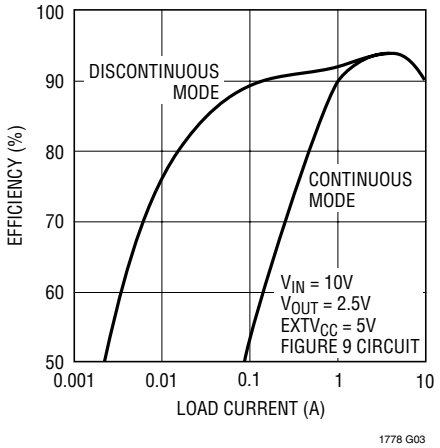

Efficiency vs Input Voltage

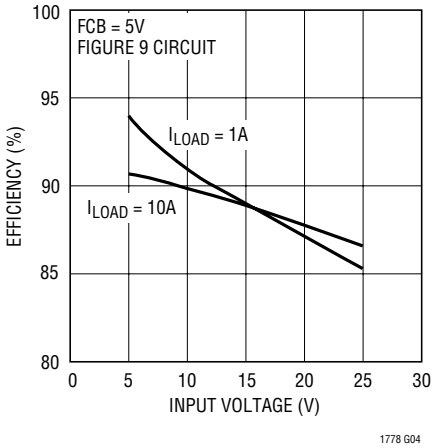

Frequency vs Input Voltage

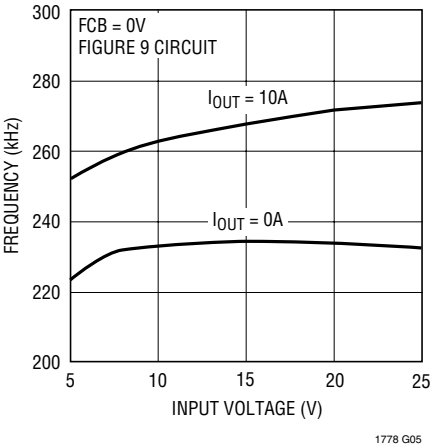

Frequency vs Load Current

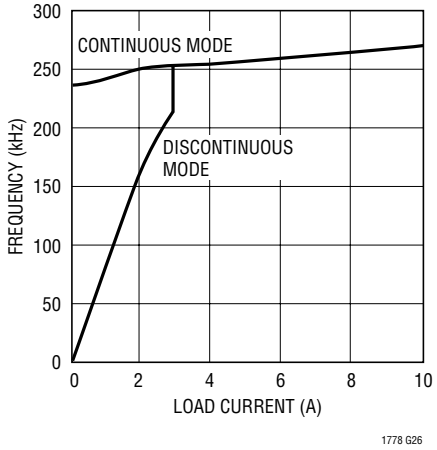

Load Regulation

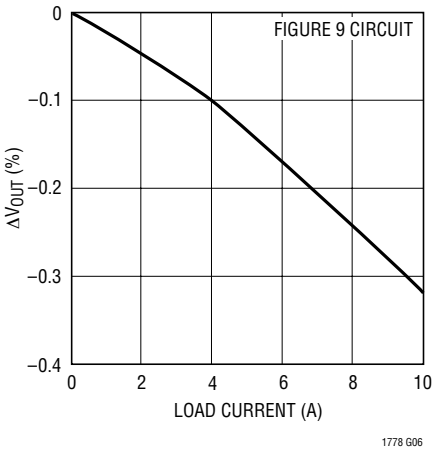

I_{TH} Voltage vs Load Current

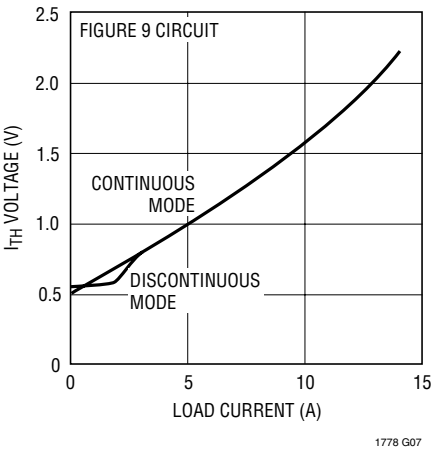

TYPICAL PERFORMANCE CHARACTERISTICS

Current Sense Threshold vs I_{TH} Voltage

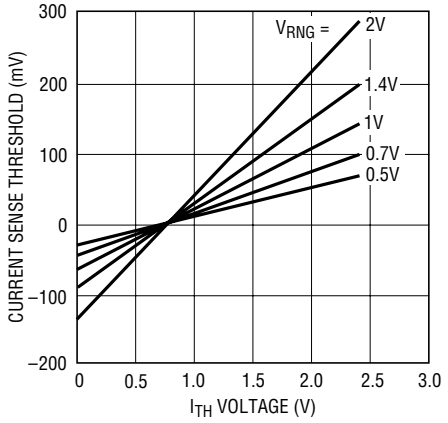

1778 G08

On-Time vs I_{ON} Current

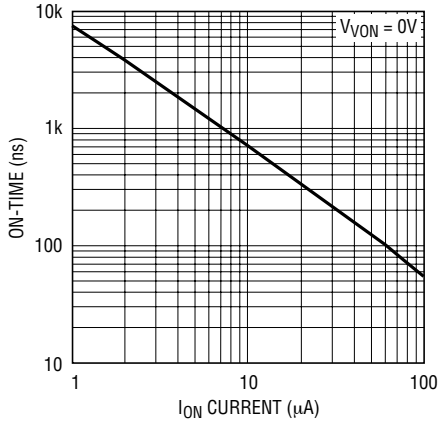

1778 G20

On-Time vs V_{ON} Voltage

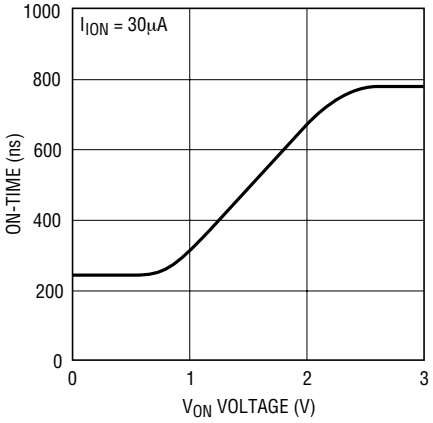

1778 G21

On-Time vs Temperature

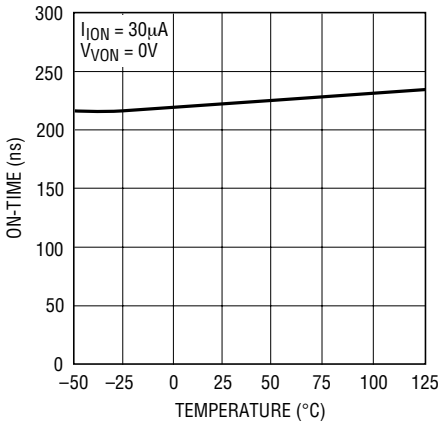

1778 G22

Current Limit Foldback

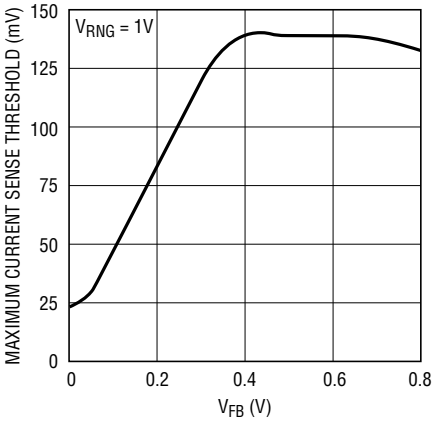

1778 G09

Maximum Current Sense Threshold vs V_{RNG} Voltage

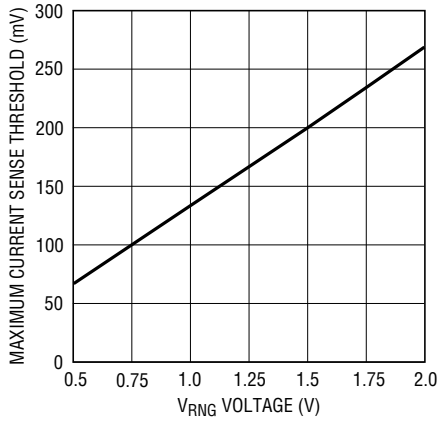

1778 G10

Maximum Current Sense Threshold vs RUN/SS Voltage

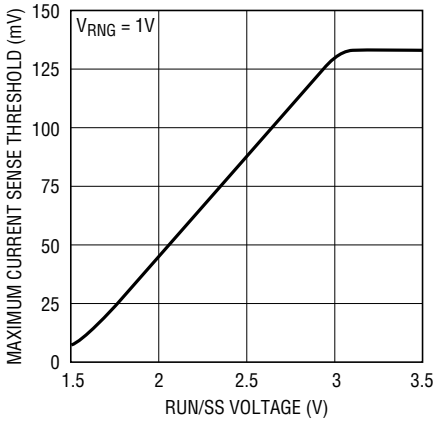

1778 G23

Maximum Current Sense Threshold vs Temperature

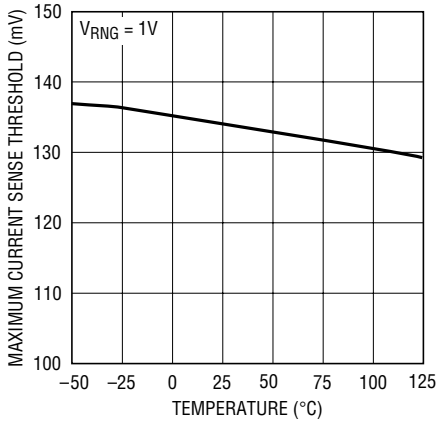

1778 G11

Feedback Reference Voltage vs Temperature

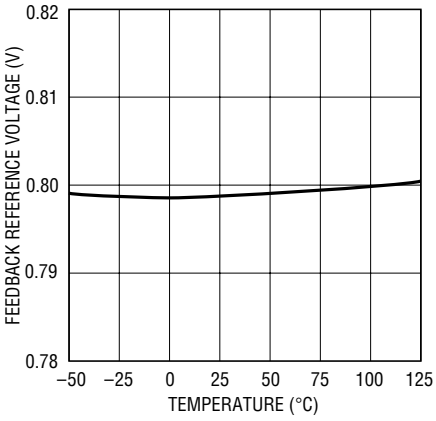

1778 G12

TYPICAL PERFORMANCE CHARACTERISTICS

Error Amplifier g_m vs Temperature

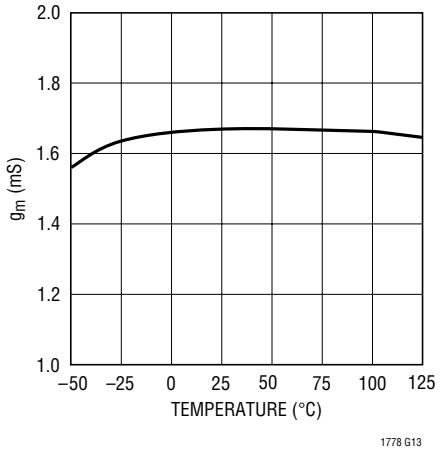

Input and Shutdown Currents vs Input Voltage

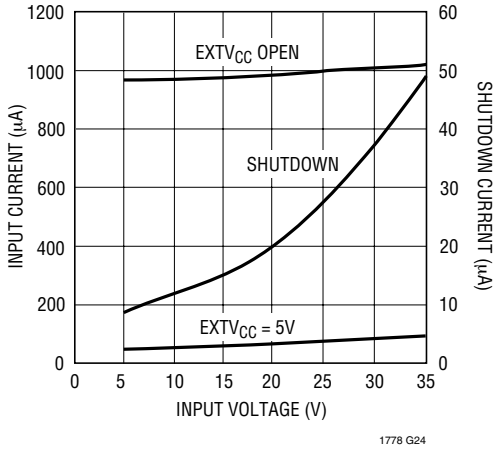

INTV$_{CC}$ Load Regulation

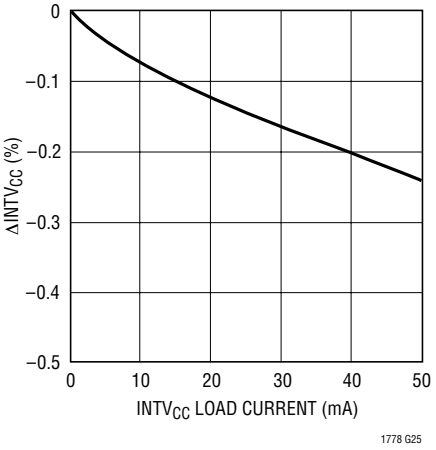

EXTV$_{CC}$ Switch Resistance vs Temperature

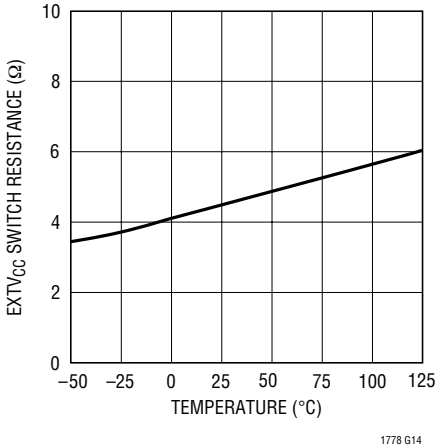

FCB Pin Current vs Temperature

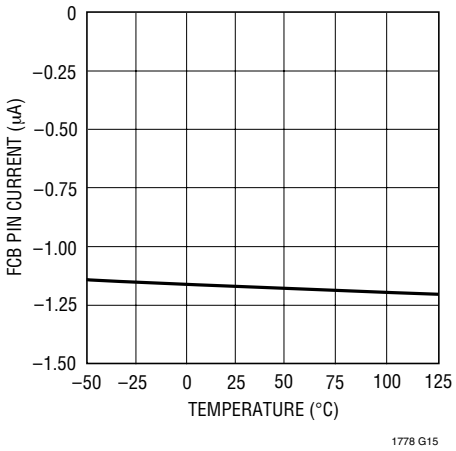

RUN/SS Pin Current vs Temperature

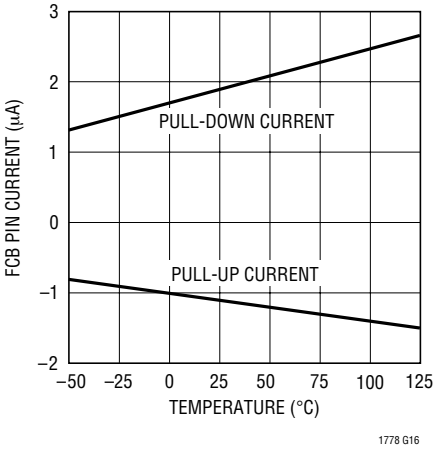

RUN/SS Latchoff Thresholds vs Temperature

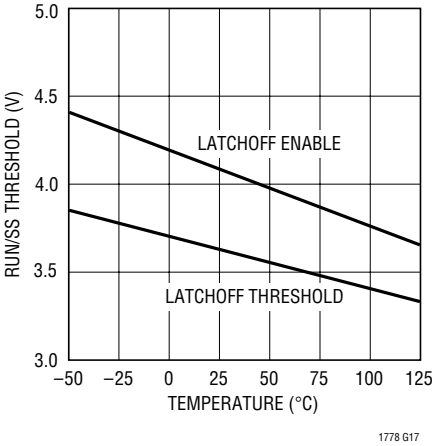

Undervoltage Lockout Threshold vs Temperature

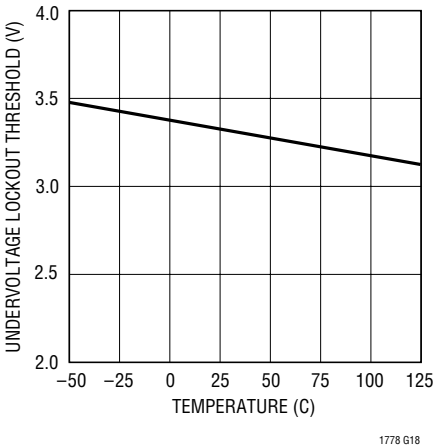

PIN FUNCTIONS

RUN/SS (Pin 1): Run Control and Soft-Start Input. A capacitor to ground at this pin sets the ramp time to full output current (approximately 3s/μF) and the time delay for overcurrent latchoff (see Applications Information). Forcing this pin below 0.8V shuts down the device.

PGOOD (Pin 2, LTC1778): Power Good Output. Open drain logic output that is pulled to ground when the output voltage is not within ±7.5% of the regulation point.

V_{ON} (Pin 2, LTC1778-1): On-Time Voltage Input. Voltage trip point for the on-time comparator. Tying this pin to the output voltage or an external resistive divider from the output makes the on-time proportional to V_{OUT}. The comparator input defaults to 0.7V when the pin is grounded or unavailable (LTC1778) and defaults to 2.4V when the pin is tied to $INTV_{CC}$. Tie this pin to $INTV_{CC}$ in high V_{OUT} applications to use a lower R_{ON} value.

V_{RNG} (Pin 3): Sense Voltage Range Input. The voltage at this pin is ten times the nominal sense voltage at maximum output current and can be set from 0.5V to 2V by a resistive divider from $INTV_{CC}$. The nominal sense voltage defaults to 70mV when this pin is tied to ground, 140mV when tied to $INTV_{CC}$.

FCB (Pin 4): Forced Continuous Input. Tie this pin to ground to force continuous synchronous operation at low load, to $INTV_{CC}$ to enable discontinuous mode operation at low load or to a resistive divider from a secondary output when using a secondary winding.

I_{TH} (Pin 5): Current Control Threshold and Error Amplifier Compensation Point. The current comparator threshold increases with this control voltage. The voltage ranges from 0V to 2.4V with 0.8V corresponding to zero sense voltage (zero current).

SGND (Pin 6): Signal Ground. All small-signal components and compensation components should connect to this ground, which in turn connects to PGND at one point.

I_{ON} (Pin 7): On-Time Current Input. Tie a resistor from V_{IN} to this pin to set the one-shot timer current and thereby set the switching frequency.

V_{FB} (Pin 8): Error Amplifier Feedback Input. This pin connects the error amplifier input to an external resistive divider from V_{OUT}.

$EXTV_{CC}$ (Pin 9): External V_{CC} Input. When $EXTV_{CC}$ exceeds 4.7V, an internal switch connects this pin to $INTV_{CC}$ and shuts down the internal regulator so that controller and gate drive power is drawn from $EXTV_{CC}$. Do not exceed 7V at this pin and ensure that $EXTV_{CC} < V_{IN}$.

V_{IN} (Pin 10): Main Input Supply. Decouple this pin to PGND with an RC filter (1Ω, 0.1μF).

$INTV_{CC}$ (Pin 11): Internal 5V Regulator Output. The driver and control circuits are powered from this voltage. Decouple this pin to power ground with a minimum of 4.7μF low ESR tantalum capacitor.

BG (Pin 12): Bottom Gate Drive. Drives the gate of the bottom N-channel MOSFET between ground and $INTV_{CC}$.

PGND (Pin 13): Power Ground. Connect this pin closely to the source of the bottom N-channel MOSFET, the (–) terminal of C_{VCC} and the (–) terminal of C_{IN}.

SW (Pin 14): Switch Node. The (–) terminal of the bootstrap capacitor C_B connects here. This pin swings from a diode voltage drop below ground up to V_{IN}.

TG (Pin 15): Top Gate Drive. Drives the top N-channel MOSFET with a voltage swing equal to $INTV_{CC}$ superimposed on the switch node voltage SW.

BOOST (Pin 16): Boosted Floating Driver Supply. The (+) terminal of the bootstrap capacitor C_B connects here. This pin swings from a diode voltage drop below $INTV_{CC}$ up to $V_{IN} + INTV_{CC}$.

FUNCTIONAL DIAGRAM

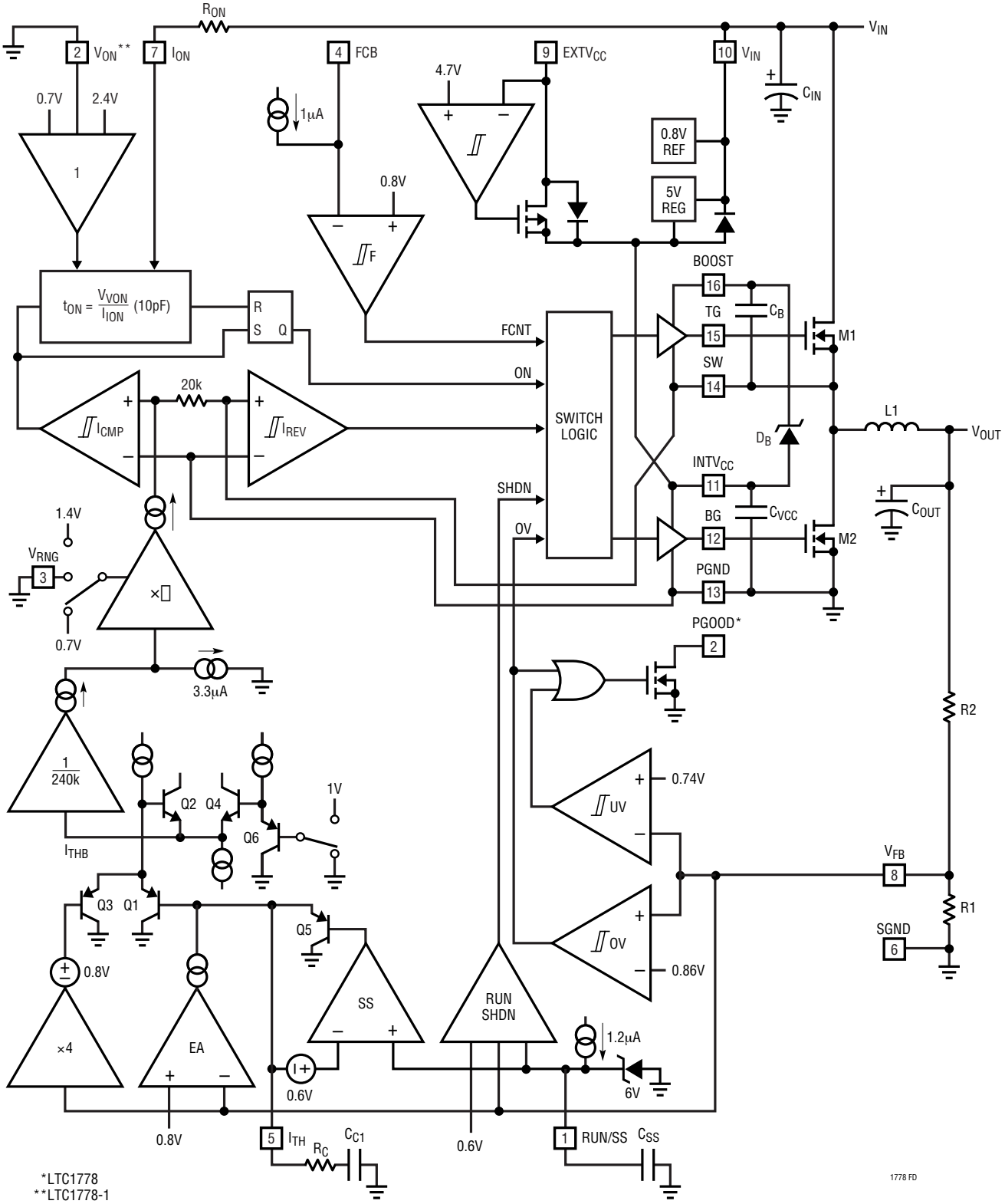

OPERATION

Main Control Loop

The LTC1778 is a current mode controller for DC/DC step-down converters. In normal operation, the top MOSFET is turned on for a fixed interval determined by a one-shot timer OST. When the top MOSFET is turned off, the bottom MOSFET is turned on until the current comparator I_{CMP} trips, restarting the one-shot timer and initiating the next cycle. Inductor current is determined by sensing the voltage between the PGND and SW pins using the bottom MOSFET on-resistance . The voltage on the I_{TH} pin sets the comparator threshold corresponding to inductor valley current. The error amplifier EA adjusts this voltage by comparing the feedback signal V_{FB} from the output voltage with an internal 0.8V reference. If the load current increases, it causes a drop in the feedback voltage relative to the reference. The I_{TH} voltage then rises until the average inductor current again matches the load current.

At low load currents, the inductor current can drop to zero and become negative. This is detected by current reversal comparator I_{REV} which then shuts off M2, resulting in discontinuous operation. Both switches will remain off with the output capacitor supplying the load current until the I_{TH} voltage rises above the zero current level (0.8V) to initiate another cycle. Discontinuous mode operation is disabled by comparator F when the FCB pin is brought below 0.8V, forcing continuous synchronous operation.

The operating frequency is determined implicitly by the top MOSFET on-time and the duty cycle required to maintain regulation. The one-shot timer generates an on-time that is proportional to the ideal duty cycle, thus holding frequency approximately constant with changes in V_{IN}. The nominal frequency can be adjusted with an external resistor R_{ON}.

Overvoltage and undervoltage comparators OV and UV pull the PGOOD output low if the output feedback voltage exits a ±7.5% window around the regulation point. Furthermore, in an overvoltage condition, M1 is turned off and M2 is turned on and held on until the overvoltage condition clears.

Foldback current limiting is provided if the output is shorted to ground. As V_{FB} drops, the buffered current threshold voltage I_{THB} is pulled down by clamp Q3 to a 1V level set by Q4 and Q6. This reduces the inductor valley current level to one sixth of its maximum value as V_{FB} approaches 0V.

Pulling the RUN/SS pin low forces the controller into its shutdown state, turning off both M1 and M2. Releasing the pin allows an internal 1.2μA current source to charge up an external soft-start capacitor C_{SS}. When this voltage reaches 1.5V, the controller turns on and begins switching, but with the I_{TH} voltage clamped at approximately 0.6V below the RUN/SS voltage. As C_{SS} continues to charge, the soft-start current limit is removed.

$INTV_{CC}/EXTV_{CC}$ Power

Power for the top and bottom MOSFET drivers and most of the internal controller circuitry is derived from the $INTV_{CC}$ pin. The top MOSFET driver is powered from a floating bootstrap capacitor C_B. This capacitor is recharged from $INTV_{CC}$ through an external Schottky diode D_B when the top MOSFET is turned off. When the $EXTV_{CC}$ pin is grounded, an internal 5V low dropout regulator supplies the $INTV_{CC}$ power from V_{IN}. If $EXTV_{CC}$ rises above 4.7V, the internal regulator is turned off, and an internal switch connects $EXTV_{CC}$ to $INTV_{CC}$. This allows a high efficiency source connected to $EXTV_{CC}$, such as an external 5V supply or a secondary output from the converter, to provide the $INTV_{CC}$ power. Voltages up to 7V can be applied to $EXTV_{CC}$ for additional gate drive. If the input voltage is low and $INTV_{CC}$ drops below 3.5V, undervoltage lockout circuitry prevents the power switches from turning on.

APPLICATIONS INFORMATION

The basic LTC1778 application circuit is shown in Figure 1. External component selection is primarily determined by the maximum load current and begins with the selection of the sense resistance and power MOSFET switches. The LTC1778 uses the on-resistance of the synchronous power MOSFET for determining the inductor current. The desired amount of ripple current and operating frequency largely determines the inductor value. Finally, C_{IN} is selected for its ability to handle the large RMS current into the converter and C_{OUT} is chosen with low enough ESR to meet the output voltage ripple and transient specification.

Choosing the LTC1778 or LTC1778-1

The LTC1778 has an open-drain PGOOD output that indicates when the output voltage is within ±7.5% of the regulation point. The LTC1778-1 trades the PGOOD pin for a V_{ON} pin that allows the on-time to be adjusted. Tying the V_{ON} pin high results in lower values for R_{ON} which is useful in high V_{OUT} applications. The V_{ON} pin also provides a means to adjust the on-time to maintain constant frequency operation in applications where V_{OUT} changes and to correct minor frequency shifts with changes in load current. Finally, the V_{ON} pin can be used to provide additional current limiting in positive-to-negative converters and as a control input to synchronize the switching frequency with a phase locked loop.

Maximum Sense Voltage and V_{RNG} Pin

Inductor current is determined by measuring the voltage across a sense resistance that appears between the PGND and SW pins. The maximum sense voltage is set by the voltage applied to the V_{RNG} pin and is equal to approximately $(0.133)V_{RNG}$. The current mode control loop will not allow the inductor current valleys to exceed $(0.133)V_{RNG}/R_{SENSE}$. In practice, one should allow some margin for variations in the LTC1778 and external component values and a good guide for selecting the sense resistance is:

$$R_{SENSE} = \frac{V_{RNG}}{10 \bullet I_{OUT(MAX)}}$$

An external resistive divider from $INTV_{CC}$ can be used to set the voltage of the V_{RNG} pin between 0.5V and 2V resulting in nominal sense voltages of 50mV to 200mV. Additionally, the V_{RNG} pin can be tied to SGND or $INTV_{CC}$ in which case the nominal sense voltage defaults to 70mV or 140mV, respectively. The maximum allowed sense voltage is about 1.33 times this nominal value.

Power MOSFET Selection

The LTC1778 requires two external N-channel power MOSFETs, one for the top (main) switch and one for the bottom (synchronous) switch. Important parameters for the power MOSFETs are the breakdown voltage $V_{(BR)DSS}$, threshold voltage $V_{(GS)TH}$, on-resistance $R_{DS(ON)}$, reverse transfer capacitance C_{RSS} and maximum current $I_{DS(MAX)}$.

The gate drive voltage is set by the 5V $INTV_{CC}$ supply. Consequently, logic-level threshold MOSFETs must be used in LTC1778 applications. If the input voltage is expected to drop below 5V, then sub-logic level threshold MOSFETs should be considered.

When the bottom MOSFET is used as the current sense element, particular attention must be paid to its on-resistance. MOSFET on-resistance is typically specified with a maximum value $R_{DS(ON)(MAX)}$ at 25°C. In this case, additional margin is required to accommodate the rise in MOSFET on-resistance with temperature:

$$R_{DS(ON)(MAX)} = \frac{R_{SENSE}}{\rho_T}$$

The ρ_T term is a normalization factor (unity at 25°C) accounting for the significant variation in on-resistance

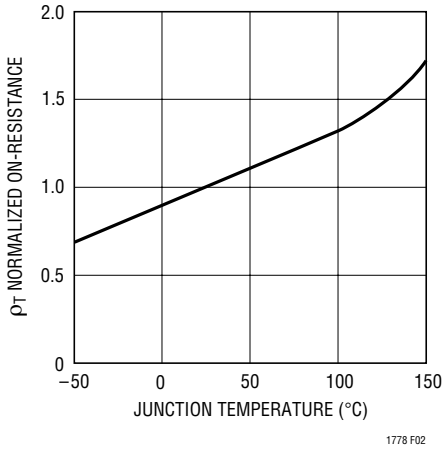

Figure 2. $R_{DS(ON)}$ vs. Temperature

APPLICATIONS INFORMATION

with temperature, typically about 0.4%/°C as shown in Figure 2. For a maximum junction temperature of 100°C, using a value $\rho_T = 1.3$ is reasonable.

The power dissipated by the top and bottom MOSFETs strongly depends upon their respective duty cycles and the load current. When the LTC1778 is operating in continuous mode, the duty cycles for the MOSFETs are:

$$D_{TOP} = \frac{V_{OUT}}{V_{IN}}$$

$$D_{BOT} = \frac{V_{IN} - V_{OUT}}{V_{IN}}$$

The resulting power dissipation in the MOSFETs at maximum output current are:

$$P_{TOP} = D_{TOP}\, I_{OUT(MAX)}^2\, \rho_{T(TOP)}\, R_{DS(ON)(MAX)} + k\, V_{IN}^2\, I_{OUT(MAX)}\, C_{RSS}\, f$$

$$P_{BOT} = D_{BOT}\, I_{OUT(MAX)}^2\, \rho_{T(BOT)}\, R_{DS(ON)(MAX)}$$

Both MOSFETs have I^2R losses and the top MOSFET includes an additional term for transition losses, which are largest at high input voltages. The constant $k = 1.7A^{-1}$ can be used to estimate the amount of transition loss. The bottom MOSFET losses are greatest when the bottom duty cycle is near 100%, during a short-circuit or at high input voltage.

Operating Frequency

The choice of operating frequency is a tradeoff between efficiency and component size. Low frequency operation improves efficiency by reducing MOSFET switching losses but requires larger inductance and/or capacitance in order to maintain low output ripple voltage.

The operating frequency of LTC1778 applications is determined implicitly by the one-shot timer that controls the on-time t_{ON} of the top MOSFET switch. The on-time is set by the current into the I_{ON} pin and the voltage at the V_{ON} pin (LTC1778-1) according to:

$$t_{ON} = \frac{V_{VON}}{I_{ION}}(10pF)$$

V_{ON} defaults to 0.7V in the LTC1778.

Tying a resistor R_{ON} from V_{IN} to the I_{ON} pin yields an on-time inversely proportional to V_{IN}. For a step-down converter, this results in approximately constant frequency operation as the input supply varies:

$$f = \frac{V_{OUT}}{V_{VON}\, R_{ON}(10pF)}\,[H_Z]$$

To hold frequency constant during output voltage changes, tie the V_{ON} pin to V_{OUT} or to a resistive divider from V_{OUT} when $V_{OUT} > 2.4V$. The V_{ON} pin has internal clamps that limit its input to the one-shot timer. If the pin is tied below 0.7V, the input to the one-shot is clamped at 0.7V. Similarly, if the pin is tied above 2.4V, the input is clamped at 2.4V. In high V_{OUT} applications, tying V_{ON} to $INTV_{CC}$ so that the comparator input is 2.4V results in a lower value for R_{ON}. Figures 3a and 3b show how R_{ON} relates to switching frequency for several common output voltages.

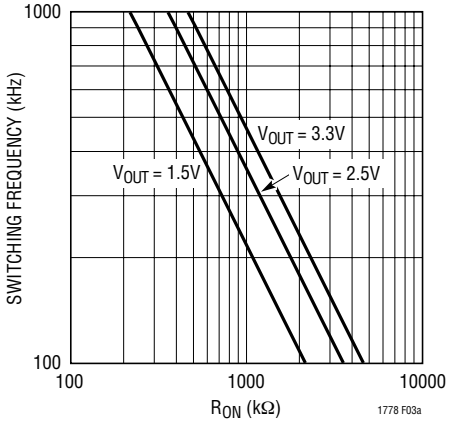

Figure 3a. Switching Frequency vs R_{ON} for the LTC1778 and LTC1778-1 (V_{ON} = 0V)

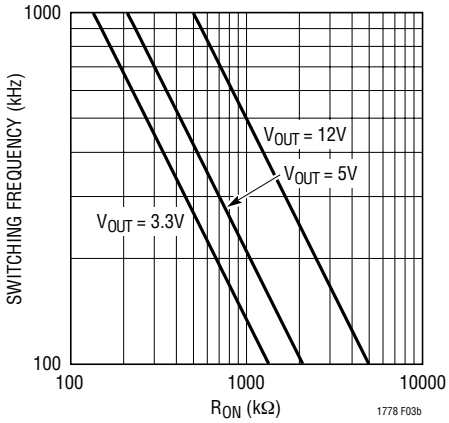

Figure 3b. Switching Frequency vs R_{ON} for the LTC1778-1 (V_{ON} = $INTV_{CC}$)

APPLICATIONS INFORMATION

Because the voltage at the I_{ON} pin is about 0.7V, the current into this pin is not exactly inversely proportional to V_{IN}, especially in applications with lower input voltages. To correct for this error, an additional resistor R_{ON2} connected from the I_{ON} pin to the 5V $INTV_{CC}$ supply will further stabilize the frequency.

$$R_{ON2} = \frac{5V}{0.7V} R_{ON}$$

Changes in the load current magnitude will also cause frequency shift. Parasitic resistance in the MOSFET switches and inductor reduce the effective voltage across the inductance, resulting in increased duty cycle as the load current increases. By lengthening the on-time slightly as current increases, constant frequency operation can be maintained. This is accomplished with a resistive divider from the I_{TH} pin to the V_{ON} pin and V_{OUT}. The values required will depend on the parasitic resistances in the specific application. A good starting point is to feed about 25% of the voltage change at the I_{TH} pin to the V_{ON} pin as shown in Figure 4a. Place capacitance on the V_{ON} pin to filter out the I_{TH} variations at the switching frequency. The resistor load on I_{TH} reduces the DC gain of the error amp and degrades load regulation, which can be avoided by using the PNP emitter follower of Figure 4b.

Minimum Off-time and Dropout Operation

The minimum off-time $t_{OFF(MIN)}$ is the smallest amount of time that the LTC1778 is capable of turning on the bottom MOSFET, tripping the current comparator and turning the MOSFET back off. This time is generally about 250ns. The minimum off-time limit imposes a maximum duty cycle of $t_{ON}/(t_{ON} + t_{OFF(MIN)})$. If the maximum duty cycle is reached, due to a dropping input voltage for example, then the output will drop out of regulation. The minimum input voltage to avoid dropout is:

$$V_{IN(MIN)} = V_{OUT} \frac{t_{ON} + t_{OFF(MIN)}}{t_{ON}}$$

A plot of maximum duty cycle vs frequency is shown in Figure 5.

Inductor Selection

Given the desired input and output voltages, the inductor value and operating frequency determine the ripple current:

$$\Delta I_L = \left(\frac{V_{OUT}}{f\ L}\right)\left(1 - \frac{V_{OUT}}{V_{IN}}\right)$$

Lower ripple current reduces core losses in the inductor, ESR losses in the output capacitors and output voltage

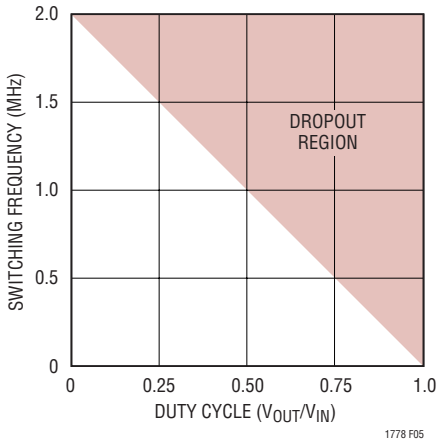

Figure 5. Maximum Switching Frequency vs Duty Cycle

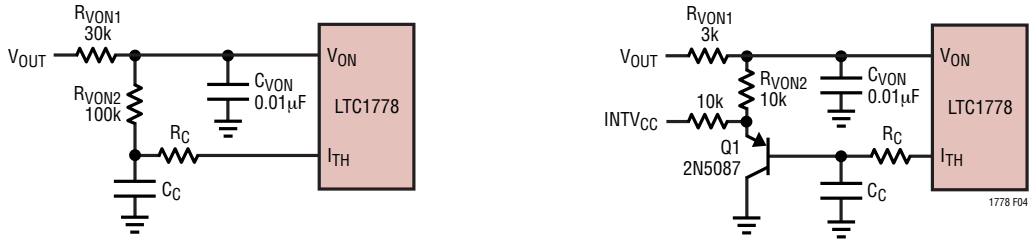

(4a) **(4b)**

Figure 4. Correcting Frequency Shift with Load Current Changes

APPLICATIONS INFORMATION

ripple. Highest efficiency operation is obtained at low frequency with small ripple current. However, achieving this requires a large inductor. There is a tradeoff between component size, efficiency and operating frequency.

A reasonable starting point is to choose a ripple current that is about 40% of $I_{OUT(MAX)}$. The largest ripple current occurs at the highest V_{IN}. To guarantee that ripple current does not exceed a specified maximum, the inductance should be chosen according to:

$$L = \left(\frac{V_{OUT}}{f\,\Delta I_{L(MAX)}}\right)\left(1 - \frac{V_{OUT}}{V_{IN(MAX)}}\right)$$

Once the value for L is known, the type of inductor must be selected. High efficiency converters generally cannot afford the core loss found in low cost powdered iron cores, forcing the use of more expensive ferrite, molypermalloy or Kool Mμ® cores. A variety of inductors designed for high current, low voltage applications are available from manufacturers such as Sumida, Panasonic, Coiltronics, Coilcraft and Toko.

Schottky Diode D1 Selection

The Schottky diode D1 shown in Figure 1 conducts during the dead time between the conduction of the power MOSFET switches. It is intended to prevent the body diode of the bottom MOSFET from turning on and storing charge during the dead time, which can cause a modest (about 1%) efficiency loss. The diode can be rated for about one half to one fifth of the full load current since it is on for only a fraction of the duty cycle. In order for the diode to be effective, the inductance between it and the bottom MOSFET must be as small as possible, mandating that these components be placed adjacently. The diode can be omitted if the efficiency loss is tolerable.

C_{IN} and C_{OUT} Selection

The input capacitance C_{IN} is required to filter the square wave current at the drain of the top MOSFET. Use a low ESR capacitor sized to handle the maximum RMS current.

$$I_{RMS} \cong I_{OUT(MAX)} \frac{V_{OUT}}{V_{IN}} \sqrt{\frac{V_{IN}}{V_{OUT}} - 1}$$

This formula has a maximum at $V_{IN} = 2V_{OUT}$, where $I_{RMS} = I_{OUT(MAX)}/2$. This simple worst-case condition is commonly used for design because even significant deviations do not offer much relief. Note that ripple current ratings from capacitor manufacturers are often based on only 2000 hours of life which makes it advisable to derate the capacitor.

The selection of C_{OUT} is primarily determined by the ESR required to minimize voltage ripple and load step transients. The output ripple ΔV_{OUT} is approximately bounded by:

$$\Delta V_{OUT} \le \Delta I_L \left(ESR + \frac{1}{8fC_{OUT}}\right)$$

Since ΔI_L increases with input voltage, the output ripple is highest at maximum input voltage. Typically, once the ESR requirement is satisfied, the capacitance is adequate for filtering and has the necessary RMS current rating.

Multiple capacitors placed in parallel may be needed to meet the ESR and RMS current handling requirements. Dry tantalum, special polymer, aluminum electrolytic and ceramic capacitors are all available in surface mount packages. Special polymer capacitors offer very low ESR but have lower capacitance density than other types. Tantalum capacitors have the highest capacitance density but it is important to only use types that have been surge tested for use in switching power supplies. Aluminum electrolytic capacitors have significantly higher ESR, but can be used in cost-sensitive applications providing that consideration is given to ripple current ratings and long term reliability. Ceramic capacitors have excellent low ESR characteristics but can have a high voltage coefficient and audible piezoelectric effects. The high Q of ceramic capacitors with trace inductance can also lead to significant ringing. When used as input capacitors, care must be taken to ensure that ringing from inrush currents and switching does not pose an overvoltage hazard to the power switches and controller. To dampen input voltage transients, add a small 5μF to 50μF aluminum electrolytic capacitor with an ESR in the range of 0.5Ω to 2Ω. High performance through-hole capacitors may also be used,

Kool Mμ is a registered trademark of Magnetics, Inc.

APPLICATIONS INFORMATION

but an additional ceramic capacitor in parallel is recommended to reduce the effect of their lead inductance.

Top MOSFET Driver Supply (C_B, D_B)

An external bootstrap capacitor C_B connected to the BOOST pin supplies the gate drive voltage for the topside MOSFET. This capacitor is charged through diode D_B from $INTV_{CC}$ when the switch node is low. When the top MOSFET turns on, the switch node rises to V_{IN} and the BOOST pin rises to approximately $V_{IN} + INTV_{CC}$. The boost capacitor needs to store about 100 times the gate charge required by the top MOSFET. In most applications 0.1μF to 0.47μF, X5R or X7R dielectric capacitor is adequate.

Discontinuous Mode Operation and FCB Pin

The FCB pin determines whether the bottom MOSFET remains on when current reverses in the inductor. Tying this pin above its 0.8V threshold enables discontinuous operation where the bottom MOSFET turns off when inductor current reverses. The load current at which current reverses and discontinuous operation begins depends on the amplitude of the inductor ripple current and will vary with changes in V_{IN}. Tying the FCB pin below the 0.8V threshold forces continuous synchronous operation, allowing current to reverse at light loads and maintaining high frequency operation.

In addition to providing a logic input to force continuous operation, the FCB pin provides a means to maintain a flyback winding output when the primary is operating in discontinuous mode. The secondary output V_{OUT2} is normally set as shown in Figure 6 by the turns ratio N of the transformer. However, if the controller goes into discontinuous mode and halts switching due to a light primary load current, then V_{OUT2} will droop. An external resistor divider from V_{OUT2} to the FCB pin sets a minimum voltage $V_{OUT2(MIN)}$ below which continuous operation is forced until V_{OUT2} has risen above its minimum.

$$V_{OUT2(MIN)} = 0.8V\left(1+\frac{R4}{R3}\right)$$

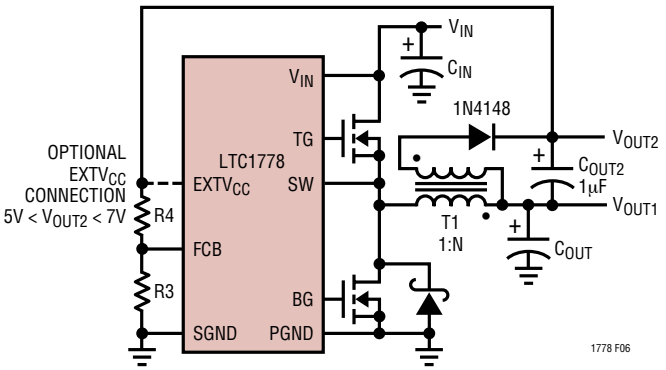

Figure 6. Secondary Output Loop and $EXTV_{CC}$ Connection

Fault Conditions: Current Limit and Foldback

The maximum inductor current is inherently limited in a current mode controller by the maximum sense voltage. In the LTC1778, the maximum sense voltage is controlled by the voltage on the V_{RNG} pin. With valley current control, the maximum sense voltage and the sense resistance determine the maximum allowed inductor valley current. The corresponding output current limit is:

$$I_{LIMIT} = \frac{V_{SNS(MAX)}}{R_{DS(ON)}\ \rho T} + \frac{1}{2}\Delta I_L$$

The current limit value should be checked to ensure that $I_{LIMIT(MIN)} > I_{OUT(MAX)}$. The minimum value of current limit generally occurs with the largest V_{IN} at the highest ambient temperature, conditions that cause the largest power loss in the converter. Note that it is important to check for self-consistency between the assumed MOSFET junction temperature and the resulting value of I_{LIMIT} which heats the MOSFET switches.

Caution should be used when setting the current limit based upon the $R_{DS(ON)}$ of the MOSFETs. The maximum current limit is determined by the minimum MOSFET on-resistance. Data sheets typically specify nominal and maximum values for $R_{DS(ON)}$, but not a minimum. A reasonable assumption is that the minimum $R_{DS(ON)}$ lies the same amount below the typical value as the maximum lies above it. Consult the MOSFET manufacturer for further guidelines.

To further limit current in the event of a short circuit to ground, the LTC1778 includes foldback current limiting. If the output falls by more than 25%, then the maximum sense voltage is progressively lowered to about one sixth of its full value.

APPLICATIONS INFORMATION

$INTV_{CC}$ Regulator

An internal P-channel low dropout regulator produces the 5V supply that powers the drivers and internal circuitry within the LTC1778. The $INTV_{CC}$ pin can supply up to 50mA RMS and must be bypassed to ground with a minimum of 4.7μF low ESR tantalum capacitor. Good bypassing is necessary to supply the high transient currents required by the MOSFET gate drivers. Applications using large MOSFETs with a high input voltage and high frequency of operation may cause the LTC1778 to exceed its maximum junction temperature rating or RMS current rating. Most of the supply current drives the MOSFET gates unless an external $EXTV_{CC}$ source is used. In continuous mode operation, this current is $I_{GATECHG} = f(Q_{g(TOP)} + Q_{g(BOT)})$. The junction temperature can be estimated from the equations given in Note 2 of the Electrical Characteristics. For example, the LTC1778CGN is limited to less than 14mA from a 30V supply:

$$T_J = 70°C + (14mA)(30V)(130°C/W) = 125°C$$

For larger currents, consider using an external supply with the $EXTV_{CC}$ pin.

$EXTV_{CC}$ Connection

The $EXTV_{CC}$ pin can be used to provide MOSFET gate drive and control power from the output or another external source during normal operation. Whenever the $EXTV_{CC}$ pin is above 4.7V the internal 5V regulator is shut off and an internal 50mA P-channel switch connects the $EXTV_{CC}$ pin to $INTV_{CC}$. $INTV_{CC}$ power is supplied from $EXTV_{CC}$ until this pin drops below 4.5V. Do not apply more than 7V to the $EXTV_{CC}$ pin and ensure that $EXTV_{CC} \leq V_{IN}$. The following list summarizes the possible connections for $EXTV_{CC}$:

1. $EXTV_{CC}$ grounded. $INTV_{CC}$ is always powered from the internal 5V regulator.

2. $EXTV_{CC}$ connected to an external supply. A high efficiency supply compatible with the MOSFET gate drive requirements (typically 5V) can improve overall efficiency.

3. $EXTV_{CC}$ connected to an output derived boost network. The low voltage output can be boosted using a charge pump or flyback winding to greater than 4.7V. The system will start-up using the internal linear regulator until the boosted output supply is available.

External Gate Drive Buffers

The LTC1778 drivers are adequate for driving up to about 30nC into MOSFET switches with RMS currents of 50mA. Applications with larger MOSFET switches or operating at frequencies requiring greater RMS currents will benefit from using external gate drive buffers such as the LTC1693. Alternately, the external buffer circuit shown in Figure 7 can be used. Note that the bipolar devices reduce the signal swing at the MOSFET gate, and benefit from an increased $EXTV_{CC}$ voltage of about 6V.

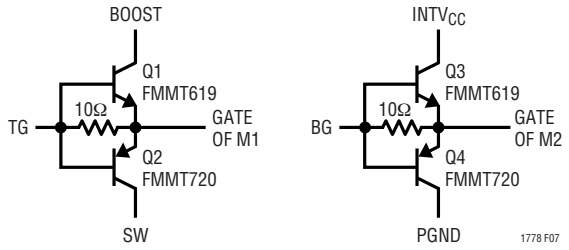

Figure 7. Optional External Gate Driver

Soft-Start and Latchoff with the RUN/SS Pin

The RUN/SS pin provides a means to shut down the LTC1778 as well as a timer for soft-start and overcurrent latchoff. Pulling the RUN/SS pin below 0.8V puts the LTC1778 into a low quiescent current shutdown (I_Q < 30μA). Releasing the pin allows an internal 1.2μA current source to charge up the external timing capacitor C_{SS}. If RUN/SS has been pulled all the way to ground, there is a delay before starting of about:

$$t_{DELAY} = \frac{1.5V}{1.2\mu A} C_{SS} = \left(1.3s/\mu F\right) C_{SS}$$

When the voltage on RUN/SS reaches 1.5V, the LTC1778 begins operating with a clamp on I_{TH} of approximately 0.9V. As the RUN/SS voltage rises to 3V, the clamp on I_{TH} is raised until its full 2.4V range is available. This takes an additional 1.3s/μF, during which the load current is folded back until the output reaches 75% of its final value. The pin can be driven from logic as shown in Figure 7. Diode D1

APPLICATIONS INFORMATION

reduces the start delay while allowing C_{SS} to charge up slowly for the soft-start function.

After the controller has been started and given adequate time to charge up the output capacitor, C_{SS} is used as a short-circuit timer. After the RUN/SS pin charges above 4V, if the output voltage falls below 75% of its regulated value, then a short-circuit fault is assumed. A 1.8μA current then begins discharging C_{SS}. If the fault condition persists until the RUN/SS pin drops to 3.5V, then the controller turns off both power MOSFETs, shutting down the converter permanently. The RUN/SS pin must be actively pulled down to ground in order to restart operation.

The overcurrent protection timer requires that the soft-start timing capacitor C_{SS} be made large enough to guarantee that the output is in regulation by the time C_{SS} has reached the 4V threshold. In general, this will depend upon the size of the output capacitance, output voltage and load current characteristic. A minimum soft-start capacitor can be estimated from:

$$C_{SS} > C_{OUT}\ V_{OUT}\ R_{SENSE}\ (10^{-4}\ [F/V\ s])$$

Generally 0.1μF is more than sufficient.

Overcurrent latchoff operation is not always needed or desired. Load current is already limited during a short-circuit by the current foldback circuitry and latchoff operation can prove annoying during troubleshooting. The feature can be overridden by adding a pull-up current greater than 5μA to the RUN/SS pin. The additional current prevents the discharge of C_{SS} during a fault and also shortens the soft-start period. Using a resistor to V_{IN} as shown in Figure 8a is simple, but slightly increases shutdown current. Connecting a resistor to $INTV_{CC}$ as shown in Figure 8b eliminates the additional shutdown current, but requires a diode to isolate C_{SS} . Any pull-up network must be able to pull RUN/SS above the 4.2V maximum threshold of the latchoff circuit and overcome the 4μA maximum discharge current.

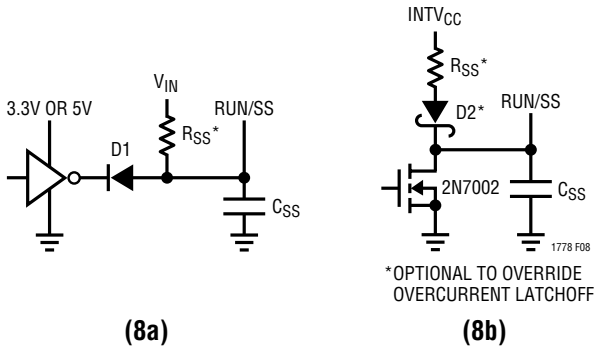

Figure 8. RUN/SS Pin Interfacing with Latchoff Defeated

Efficiency Considerations

The percent efficiency of a switching regulator is equal to the output power divided by the input power times 100%. It is often useful to analyze individual losses to determine what is limiting the efficiency and which change would produce the most improvement. Although all dissipative elements in the circuit produce losses, four main sources account for most of the losses in LTC1778 circuits:

1. DC I^2R losses. These arise from the resistances of the MOSFETs, inductor and PC board traces and cause the efficiency to drop at high output currents. In continuous mode the average output current flows through L, but is chopped between the top and bottom MOSFETs. If the two MOSFETs have approximately the same $R_{DS(ON)}$, then the resistance of one MOSFET can simply be summed with the resistances of L and the board traces to obtain the DC I^2R loss. For example, if $R_{DS(ON)} = 0.01\Omega$ and $R_L = 0.005\Omega$, the loss will range from 15mW to 1.5W as the output current varies from 1A to 10A.

2. Transition loss. This loss arises from the brief amount of time the top MOSFET spends in the saturated region during switch node transitions. It depends upon the input voltage, load current, driver strength and MOSFET capacitance, among other factors. The loss is significant at input voltages above 20V and can be estimated from:

$$\text{Transition Loss} \cong (1.7A^{-1})\ V_{IN}^2\ I_{OUT}\ C_{RSS}\ f$$

3. $INTV_{CC}$ current. This is the sum of the MOSFET driver and control currents. This loss can be reduced by supplying $INTV_{CC}$ current through the $EXTV_{CC}$ pin from a high efficiency source, such as an output derived boost network or alternate supply if available.

4. C_{IN} loss. The input capacitor has the difficult job of filtering the large RMS input current to the regulator. It must have a very low ESR to minimize the AC I^2R loss and sufficient capacitance to prevent the RMS current from causing additional upstream losses in fuses or batteries.

APPLICATIONS INFORMATION

Other losses, including C_{OUT} ESR loss, Schottky diode D1 conduction loss during dead time and inductor core loss generally account for less than 2% additional loss.

When making adjustments to improve efficiency, the input current is the best indicator of changes in efficiency. If you make a change and the input current decreases, then the efficiency has increased. If there is no change in input current, then there is no change in efficiency.

Checking Transient Response

The regulator loop response can be checked by looking at the load transient response. Switching regulators take several cycles to respond to a step in load current. When a load step occurs, V_{OUT} immediately shifts by an amount equal to ΔI_{LOAD} (ESR), where ESR is the effective series resistance of C_{OUT}. ΔI_{LOAD} also begins to charge or discharge C_{OUT} generating a feedback error signal used by the regulator to return V_{OUT} to its steady-state value. During this recovery time, V_{OUT} can be monitored for overshoot or ringing that would indicate a stability problem. The I_{TH} pin external components shown in Figure 9 will provide adequate compensation for most applications. For a detailed explanation of switching control loop theory see Application Note 76.

Design Example

As a design example, take a supply with the following specifications: V_{IN} = 7V to 28V (15V nominal), V_{OUT} = 2.5V ±5%, $I_{OUT(MAX)}$ = 10A, f = 250kHz. First, calculate the timing resistor with $V_{ON} = V_{OUT}$:

$$R_{ON} = \frac{2.5V}{(0.7V)(250kHz)(10pF)} = 1.42M\Omega$$

and choose the inductor for about 40% ripple current at the maximum V_{IN}:

$$L = \frac{2.5V}{(250kHz)(0.4)(10A)}\left(1-\frac{2.5V}{28V}\right) = 2.3\mu H$$

Selecting a standard value of 1.8μH results in a maximum ripple current of:

$$\Delta I_L = \frac{2.5V}{(250kHz)(1.8\mu H)}\left(1-\frac{2.5V}{28V}\right) = 5.1A$$

Next, choose the synchronous MOSFET switch. Choosing a Si4874 ($R_{DS(ON)}$ = 0.0083Ω (NOM) 0.010Ω (MAX), θ_{JA} = 40°C/W) yields a nominal sense voltage of:

$$V_{SNS(NOM)} = (10A)(1.3)(0.0083\Omega) = 108mV$$

Tying V_{RNG} to 1.1V will set the current sense voltage range for a nominal value of 110mV with current limit occurring at 146mV. To check if the current limit is acceptable, assume a junction temperature of about 80°C above a 70°C ambient with $\rho_{150°C}$ = 1.5:

$$I_{LIMIT} \geq \frac{146mV}{(1.5)(0.010\Omega)} + \frac{1}{2}(5.1A) = 12A$$

and double check the assumed T_J in the MOSFET:

$$P_{BOT} = \frac{28V-2.5V}{28V}(12A)^2(1.5)(0.010\Omega) = 1.97W$$

$$T_J = 70°C + (1.97W)(40°C/W) = 149°C$$

Because the top MOSFET is on for such a short time, an Si4884 $R_{DS(ON)(MAX)}$ = 0.0165Ω, C_{RSS} = 100pF, θ_{JA} = 40°C/W will be sufficient. Checking its power dissipation at current limit with $\rho_{100°C}$ = 1.4:

$$P_{TOP} = \frac{2.5V}{28V}(12A)^2(1.4)(0.0165\Omega) + (1.7)(28V)^2(12A)(100pF)(250kHz) = 0.30W + 0.40W = 0.7W$$

$$T_J = 70°C + (0.7W)(40°C/W) = 98°C$$

The junction temperatures will be significantly less at nominal current, but this analysis shows that careful attention to heat sinking will be necessary in this circuit.

APPLICATIONS INFORMATION

C_{IN} is chosen for an RMS current rating of about 5A at 85°C. The output capacitors are chosen for a low ESR of 0.013Ω to minimize output voltage changes due to inductor ripple current and load steps. The ripple voltage will be only:

$$\Delta V_{OUT(RIPPLE)} = \Delta I_{L(MAX)} (ESR) = (5.1A)(0.013\Omega) = 66mV$$

However, a 0A to 10A load step will cause an output change of up to:

$$\Delta V_{OUT(STEP)} = \Delta I_{LOAD} (ESR) = (10A)(0.013\Omega) = 130mV$$

An optional 22μF ceramic output capacitor is included to minimize the effect of ESL in the output ripple. The complete circuit is shown in Figure 9.

PC Board Layout Checklist

When laying out a PC board follow one of the two suggested approaches. The simple PC board layout requires a dedicated ground plane layer. Also, for higher currents, it is recommended to use a multilayer board to help with heat sinking power components.

- The ground plane layer should not have any traces and it should be as close as possible to the layer with power MOSFETs.
- Place C_{IN}, C_{OUT}, MOSFETs, D1 and inductor all in one compact area. It may help to have some components on the bottom side of the board.
- Place LTC1778 chip with pins 9 to 16 facing the power components. Keep the components connected to pins 1 to 8 close to LTC1778 (noise sensitive components).
- Use an immediate via to connect the components to ground plane including SGND and PGND of LTC1778. Use several bigger vias for power components.
- Use compact plane for switch node (SW) to improve cooling of the MOSFETs and to keep EMI down.
- Use planes for V_{IN} and V_{OUT} to maintain good voltage filtering and to keep power losses low.
- Flood all unused areas on all layers with copper. Flooding with copper will reduce the temperature rise of power component. You can connect the copper areas to any DC net (V_{IN}, V_{OUT}, GND or to any other DC rail in your system).

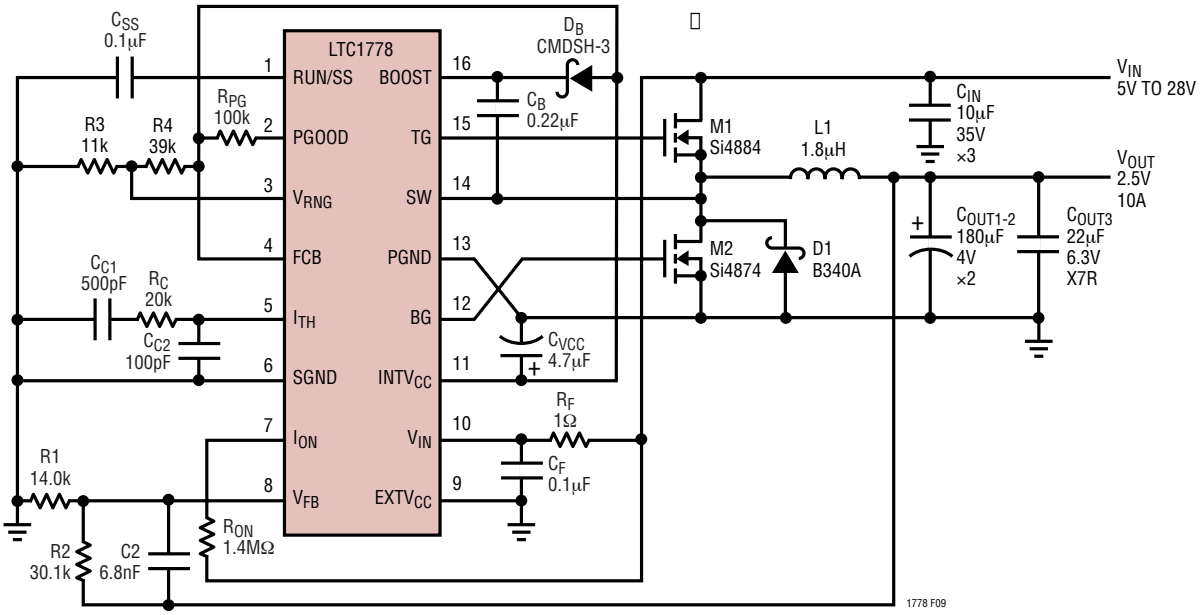

C_{IN}: UNITED CHEMICON THCR60EIHI06ZT
C_{OUT1-2}: CORNELL DUBILIER ESRE181E04B
L1: SUMIDA CEP125-1R8MC-H

Figure 9. Design Example: 2.5V/10A at 250kHz

APPLICATIONS INFORMATION

When laying out a printed circuit board, without a ground plane, use the following checklist to ensure proper operation of the controller. These items are also illustrated in Figure 10.

- Segregate the signal and power grounds. All small signal components should return to the SGND pin at one point which is then tied to the PGND pin close to the source of M2.
- Place M2 as close to the controller as possible, keeping the PGND, BG and SW traces short.
- Connect the input capacitor(s) C_{IN} close to the power MOSFETs. This capacitor carries the MOSFET AC current.
- Keep the high dV/dT SW, BOOST and TG nodes away from sensitive small-signal nodes.
- Connect the $INTV_{CC}$ decoupling capacitor C_{VCC} closely to the $INTV_{CC}$ and PGND pins.
- Connect the top driver boost capacitor C_B closely to the BOOST and SW pins.
- Connect the V_{IN} pin decoupling capacitor C_F closely to the V_{IN} and PGND pins.

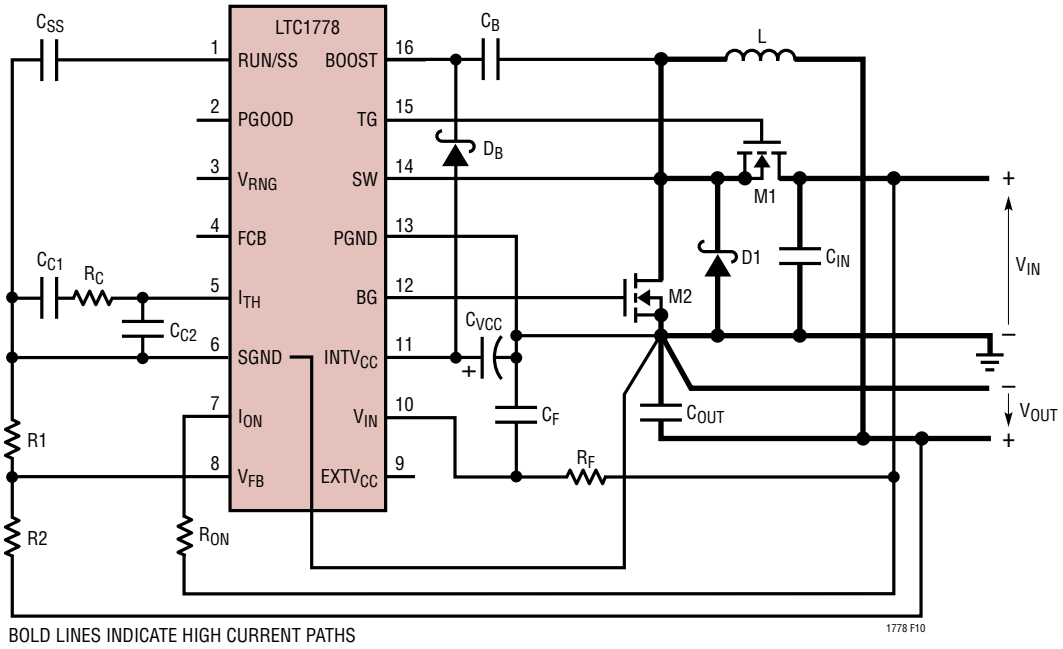

Figure 10. LTC1778 Layout Diagram

TYPICAL APPLICATIONS

1.5V/10A at 300kHz from 3.3V Input

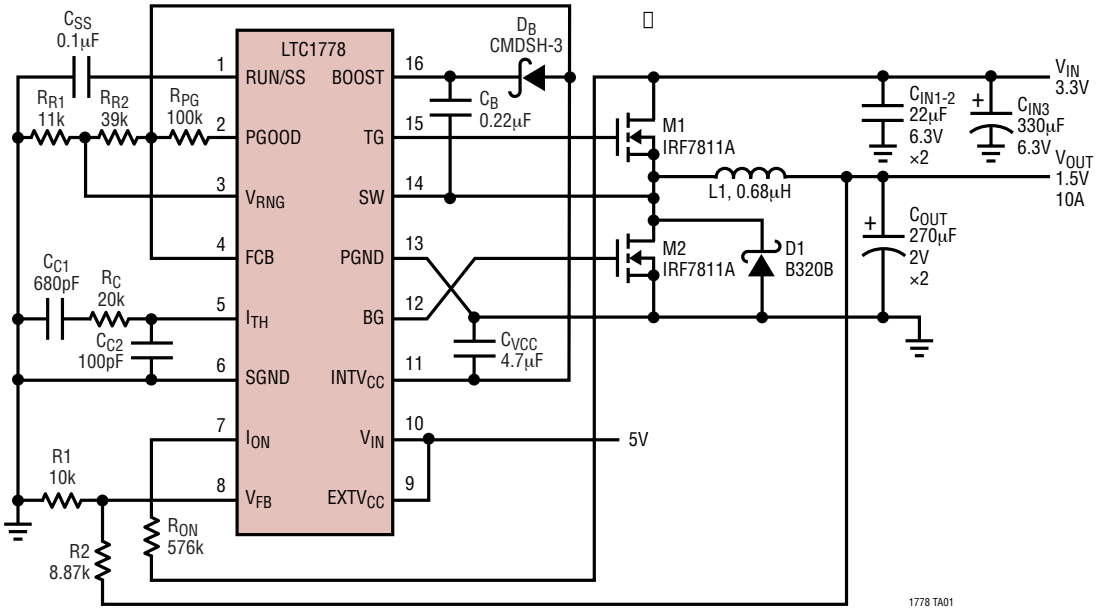

C_{IN1-2}: MURATA GRM42-2X5R226K6.3
C_{OUT}: CORNELL DUBILIER ESRE271M02B

1.2V/6A at 300kHz

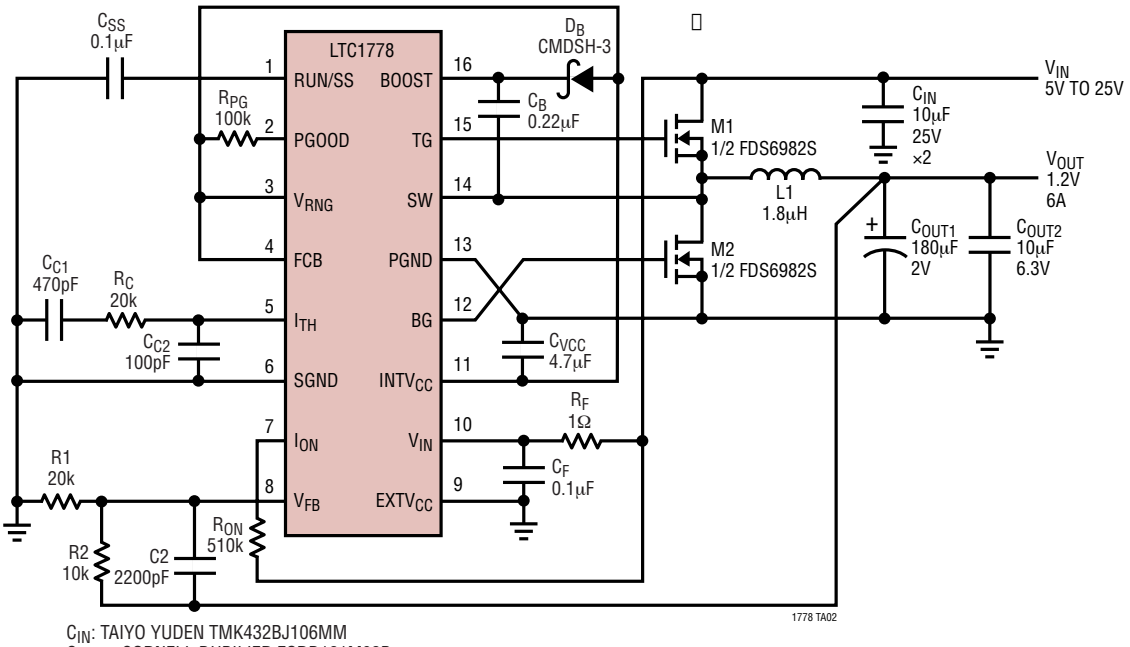

C_{IN}: TAIYO YUDEN TMK432BJ106MM
C_{OUT1}: CORNELL DUBILIER ESRD181M02B
C_{OUT2}: TAIYO YUDEN JMK316BJ106ML
L1: TOKO 919AS-1R8N

TYPICAL APPLICATIONS

Single Inductor, Positive Output Buck/Boost

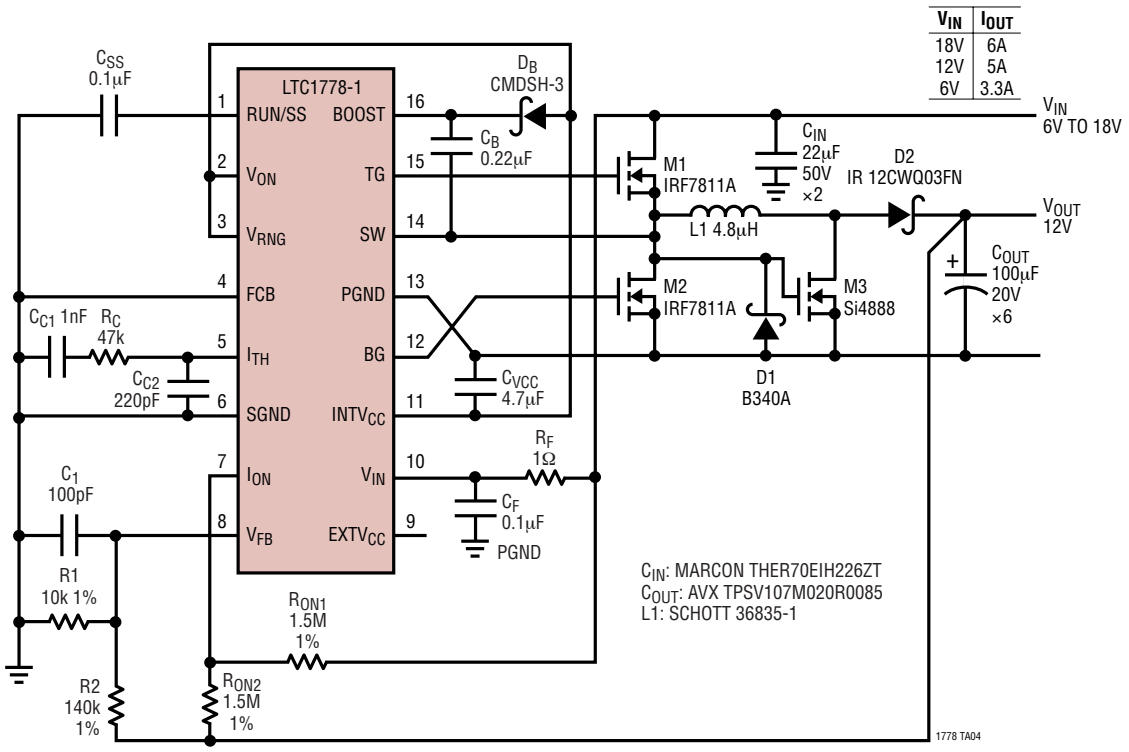

12V/5A at 300kHz

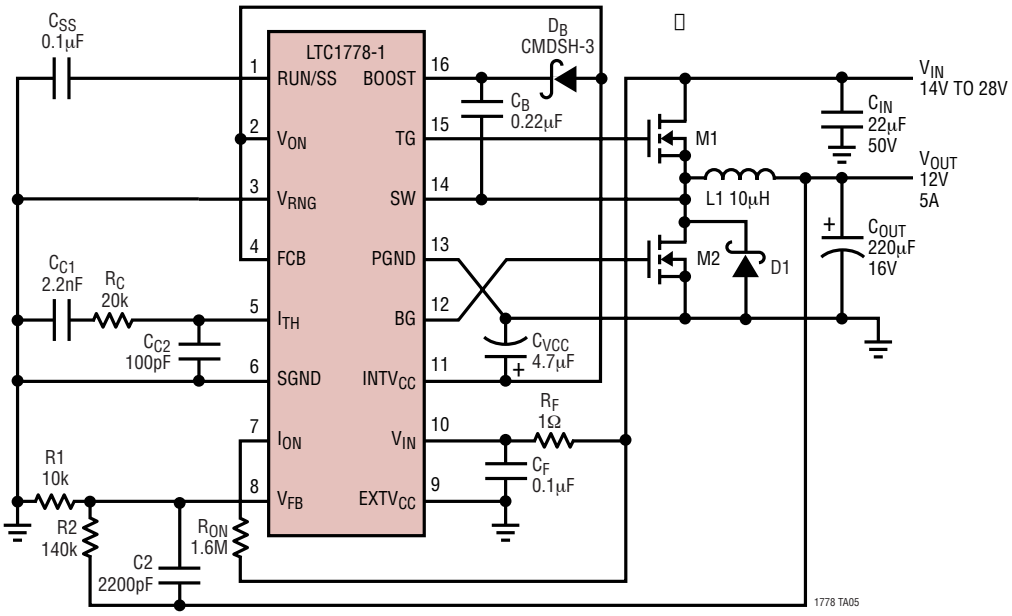

CIN: UNITED CHEMICON THCR70E1H226ZT (847) 696-2000
COUT: SANYO 16SV220M (619) 661-6835
L1: SUMIDA CDRH127-100 (847) 956-0667
M1, M2: FAIRCHILD FDS6680A (408) 822-2126
D1: DIODES, INC. B340A (805) 446-4800

TYPICAL APPLICATIONS

Positive-to-Negative Converter, –5V/5A at 300kHz

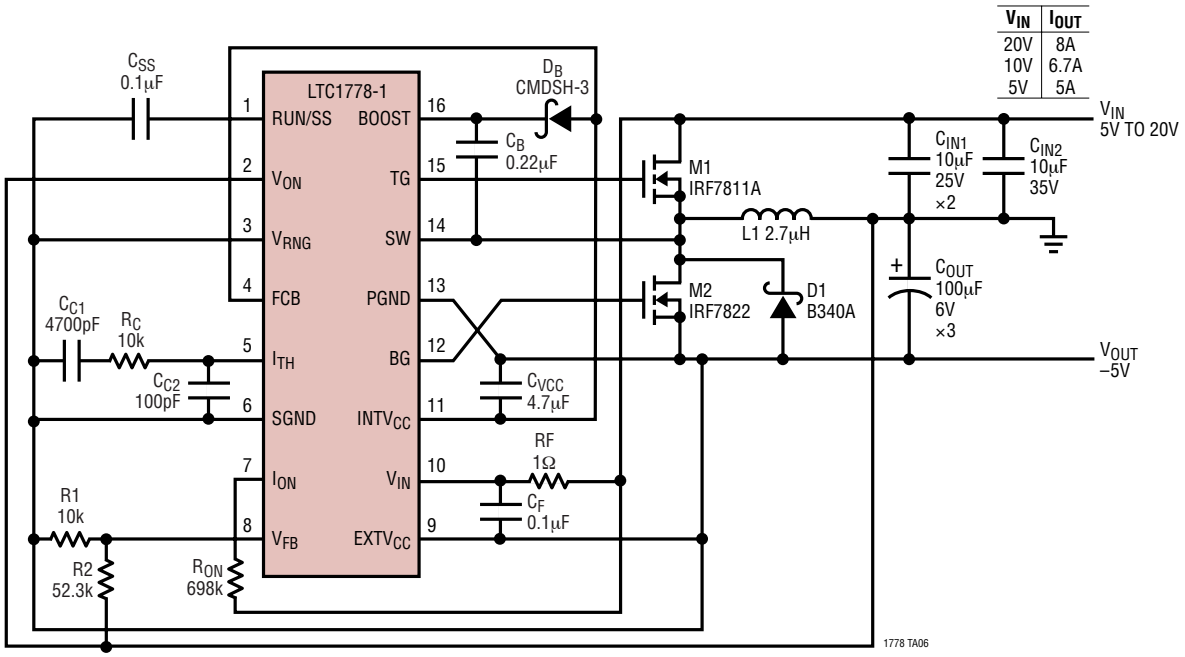

C_{IN1}: TAIYO YUDEN TMK432BJ106MM
C_{IN2}: SANYO 35CV10GX
C_{OUT}: PANASONIC EEFUD0J101R
L1: PANASONIC ETQPAF2R7H

PACKAGE DESCRIPTION

GN Package
16-Lead Plastic SSOP (Narrow 0.150)
(LTC DWG # 05-08-1641)

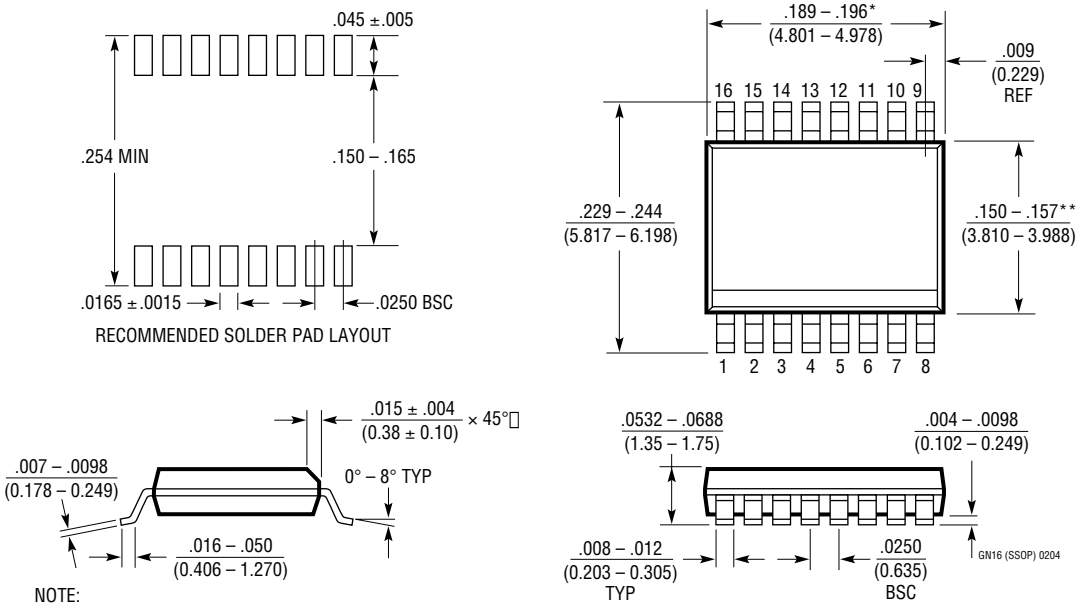

NOTE:
1. CONTROLLING DIMENSION: INCHES
2. DIMENSIONS ARE IN $\frac{\text{INCHES}}{\text{(MILLIMETERS)}}$
3. DRAWING NOT TO SCALE

*DIMENSION DOES NOT INCLUDE MOLD FLASH. MOLD FLASH SHALL NOT EXCEED 0.006" (0.152mm) PER SIDE

**DIMENSION DOES NOT INCLUDE INTERLEAD FLASH. INTERLEAD FLASH SHALL NOT EXCEED 0.010" (0.254mm) PER SIDE

Information furnished by Linear Technology Corporation is believed to be accurate and reliable. However, no responsibility is assumed for its use. Linear Technology Corporation makes no representation that the interconnection of its circuits as described herein will not infringe on existing patent rights.

TYPICAL APPLICATION

Typical Application 2.5V/3A at 1.4MHz

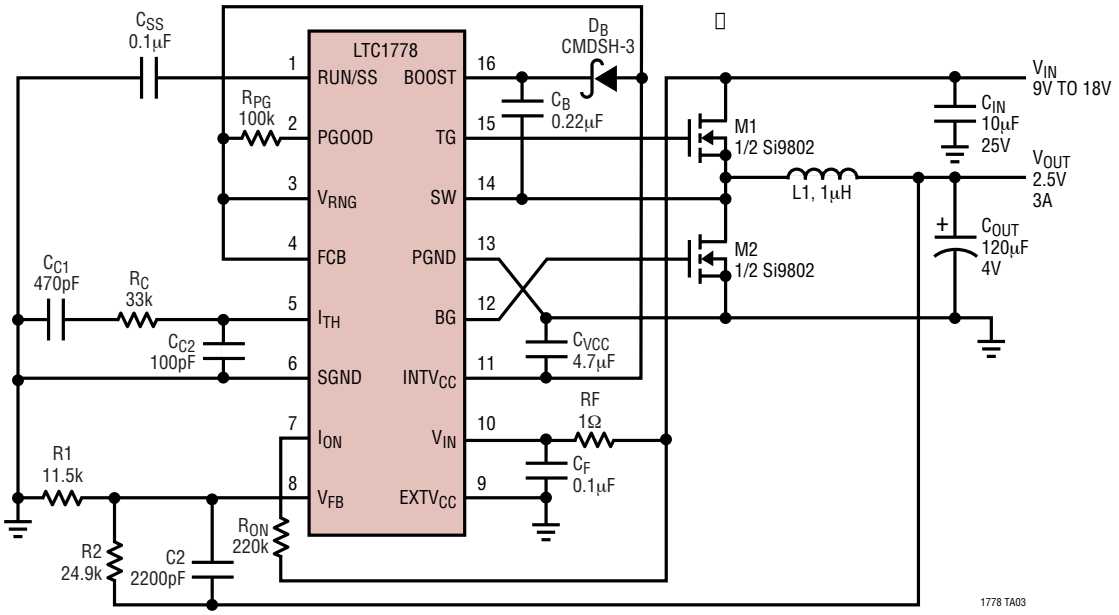

C_{IN}: TAIYO YUDEN TMK432BJ106MM
C_{OUT}: CORNELL DUBILIER ESRD121M04B
L1: TOKO A921CY-1R0M

RELATED PARTS

PART NUMBER	DESCRIPTION	COMMENTS
LTC1622	550kHz Step-Down Controller	8-Pin MSOP; Synchronizable; Soft-Start; Current Mode
LTC1625/LTC1775	No R_{SENSE} Current Mode Synchronous Step-Down Controller	97% Efficiency; No Sense Resistor; 16-Pin SSOP
LTC1628-PG	Dual, 2-Phase Synchronous Step-Down Controller	Power Good Output; Minimum Input/Output Capacitors; $3.5V \le V_{IN} \le 36V$
LTC1628-SYNC	Dual, 2-Phase Synchronous Step-Down Controller	Synchronizable 150kHz to 300kHz
LTC1709-7	High Efficiency, 2-Phase Synchronous Step-Down Controller with 5-Bit VID	Up to 42A Output; $0.925V \le V_{OUT} \le 2V$
LTC1709-8	High Efficiency, 2-Phase Synchronous Step-Down Controller	Up to 42A Output; VRM 8.4; $1.3V \le V_{OUT} \le 3.5V$
LTC1735	High Efficiency, Synchronous Step-Down Controller	Burst Mode® Operation; 16-Pin Narrow SSOP; $3.5V \le V_{IN} \le 36V$
LTC1736	High Efficiency, Synchronous Step-Down Controller with 5-Bit VID	Mobile VID; $0.925V \le V_{OUT} \le 2V$; $3.5V \le V_{IN} \le 36V$
LTC1772	SOT-23 Step-Down Controller	Current Mode; 550kHz; Very Small Solution Size
LTC1773	Synchronous Step-Down Controller	Up to 95% Efficiency, 550kHz, $2.65V \le V_{IN} \le 8.5V$, $0.8V \le V_{OUT} \le V_{IN}$, Synchronizable to 750kHz
LTC1876	2-Phase, Dual Synchronous Step-Down Controller with Step-Up Regulator	$3.5V \le V_{IN} \le 36V$, Power Good Output, 300kHz Operation
LTC3713	Low V_{IN} High Current Synchronous Step-Down Controller	$1.5V \le V_{IN} \le 36V$, $0.8V \le V_{OUT} \le (0.9)V_{IN}$, I_{OUT} Up to 20A
LTC3778	Low V_{OUT}, No R_{SENSE} Synchronous Step-Down Controller	$0.6V \le V_{OUT} \le (0.9)V_{IN}$, $4V \le V_{IN} \le 36V$, I_{OUT} Up to 20A
LT®3800	60V Synchronous Step-Down Controller	Current Mode, Output Slew Rate Control

Burst Mode is a registered trademark of Linear Technology Corporation.

Linear Technology Corporation
1630 McCarthy Blvd., Milpitas, CA 95035-7417
(408) 432-1900 • FAX: (408) 434-0507 • www.linear.com

LT/LT 0405 REV B • PRINTED IN USA

© LINEAR TECHNOLOGY CORPORATION 2001

Looking for pricing, stock, or lifecycle information?

Click below to explore more details on WIN SOURCE:

- View LTC1778IGN#PBF on WIN SOURCE
- Linear Technology Information

Optimize Your Supply Chain with WIN SOURCE Solutions

- Global Sourcing Solution
- Obsolete Management
- Cost Control Management
- Shortage Management
- Alternative Solution
- Excess Inventory Management