THE DATASHEET OF

74VHC14PW,118

www.win-source.net 0086-755-83957316

74VHC14; 74VHCT14

Hex inverting Schmitt trigger

Rev. 01 — 17 August 2009 Product data sheet

1. General description

The 74VHC14; 74VHCT14 are a high-speed Si-gate CMOS devices and are pin compatible with Low-power Schottky TTL (LSTTL). They are specified in compliance with JEDEC standard No. 7A.

The 74VHC14; 74VHCT14 provide six inverting buffers with Schmitt-trigger action. They are capable of transforming slowly changing input signals into sharply defined, jitter-free output signals.

2. Features

- Balanced propagation delays
- All inputs have Schmitt-trigger action
- Inputs accept voltages higher than V_{CC}
- Input levels:
  - The 74VHC14 operates with CMOS input level
  - The 74VHCT14 operates with TTL input level
- ESD protection:
  - HBM EIA/JESD22-A114E exceeds 2000 V
  - MM EIA/JESD22-A115-A exceeds 200 V
  - CDM EIA/JESD22-C101C exceeds 1000 V
- Multiple package options
- Specified from –40 °C to +85 °C and from –40 °C to +125 °C

3. Ordering information

Table 1. Ordering information

Type number	Package			
	Temperature range	Name	Description	Version
74VHC14D	–40 °C to +125 °C	SO14	plastic small outline package; 14 leads; body width 3.9 mm	SOT108-1
74VHCT14D				
74VHC14PW	–40 °C to +125 °C	TSSOP14	plastic thin shrink small outline package; 14 leads; body width 4.4 mm	SOT402-1
74VHCT14PW				
74VHC14BQ	–40 °C to +125 °C	DHVQFN14	plastic dual in-line compatible thermal enhanced very thin quad flat package; no leads; 14 terminals; body 2.5 × 3 × 0.85 mm	SOT762-1
74VHCT14BQ				

4. Functional diagram

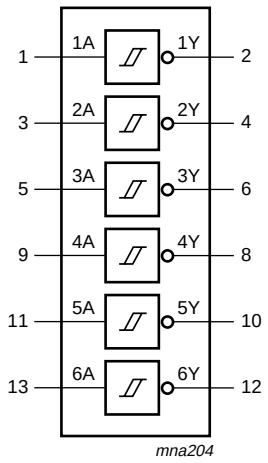

Fig 1. Logic symbol

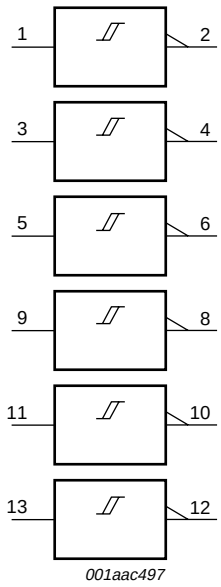

Fig 2. IEC logic symbol

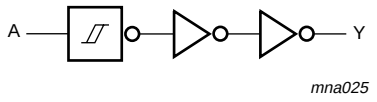

Fig 3. Logic diagram (one Schmitt-trigger)

© Nexperia B.V. 2017. All rights reserved

5. Pinning information

5.1 Pinning

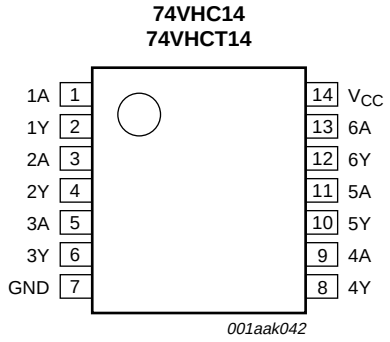

Fig 4. Pin configuration SO14 and TSSOP14

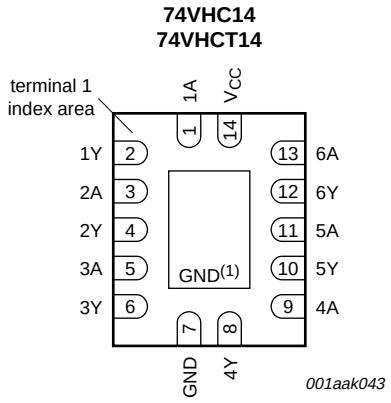

Transparent top view

(1) The die substrate is attached to this pad using conductive die attach material. It can not be used as a supply pin or input.

Fig 5. Pin configuration DHVQFN14

5.2 Pin description

Table 2. Pin description

Symbol	Pin	Description
1A	1	data input 1
1Y	2	data output 1
2A	3	data input 2
2Y	4	data output 2
3A	5	data input 3
3Y	6	data output 3
GND	7	ground (0 V)
4Y	8	data output 4
4A	9	data input 4
5Y	10	data output 5
5A	11	data input 5
6Y	12	data output 6
6A	13	data input 6
V_{CC}	14	supply voltage

© Nexperia B.V. 2017. All rights reserved

6. Functional description

Table 3. Function table[1]

Input	Output
nA	**nY**
L	H
H	L

[1] H = HIGH voltage level;
L = LOW voltage level.

7. Limiting values

Table 4. Limiting values

In accordance with the Absolute Maximum Rating System (IEC 60134). Voltages are referenced to GND (ground = 0 V).

Symbol	Parameter	Conditions		Min	Max	Unit
V_{CC}	supply voltage			–0.5	+7.0	V
V_I	input voltage			–0.5	+7.0	V
I_{IK}	input clamping current	V_I < –0.5 V	[1]	–20	-	mA
I_{OK}	output clamping current	V_O < –0.5 V or V_O > V_{CC} + 0.5 V	[1]	–20	+20	mA
I_O	output current	V_O = –0.5 V to (V_{CC} + 0.5 V)		–25	+25	mA
I_{CC}	supply current			-	+75	mA
I_{GND}	ground current			–75	-	mA
T_{stg}	storage temperature			–65	+150	°C
P_{tot}	total power dissipation	T_{amb} = –40 °C to +125 °C	[2]	-	500	mW

[1] The input and output voltage ratings may be exceeded if the input and output current ratings are observed.

[2] For SO14 packages: above 70 °C the value of P_{tot} derates linearly at 8 mW/K.
For TSSOP14 packages: above 60 °C the value of P_{tot} derates linearly at 5.5 mW/K.
For DHVQFN14 packages: above 60 °C the value of P_{tot} derates linearly at 4.5 mW/K.

8. Recommended operating conditions

Table 5. Operating conditions

Symbol	Parameter	Conditions	Min	Typ	Max	Unit
74VHC14						
V_{CC}	supply voltage		2.0	5.0	5.5	V
V_I	input voltage		0	-	5.5	V
V_O	output voltage		0	-	V_{CC}	V
T_{amb}	ambient temperature		–40	+25	+125	°C
74VHCT14						
V_{CC}	supply voltage		4.5	5.0	5.5	V
V_I	input voltage		0	-	5.5	V
V_O	output voltage		0	-	V_{CC}	V
T_{amb}	ambient temperature		–40	+25	+125	°C

© Nexperia B.V. 2017. All rights reserved

9. Static characteristics

Table 6. Static characteristics

At recommended operating conditions; voltages are referenced to GND (ground = 0 V).

Symbol	Parameter	Conditions	25 °C			–40 °C to +85 °C		–40 °C to +125 °C		Unit
			Min	Typ	Max	Min	Max	Min	Max	
74VHC14										
V_{OH}	HIGH-level output voltage	$V_I = V_{T+}$ or V_{T-}								
		I_O = –50 μA; V_{CC} = 2.0 V	1.9	2.0	-	1.9	-	1.9	-	V
		I_O = –50 μA; V_{CC} = 3.0 V	2.9	3.0	-	2.9	-	2.9	-	V
		I_O = –50 μA; V_{CC} = 4.5 V	4.4	4.5	-	4.4	-	4.4	-	V
		I_O = –4.0 mA; V_{CC} = 3.0 V	2.58	-	-	2.48	-	2.40	-	V
		I_O = –8.0 mA; V_{CC} = 4.5 V	3.94	-	-	3.80	-	3.70	-	V
V_{OL}	LOW-level output voltage	$V_I = V_{T+}$ or V_{T-}								
		I_O = 50 μA; V_{CC} = 2.0 V	-	0	0.1	-	0.1	-	0.1	V
		I_O = 50 μA; V_{CC} = 3.0 V	-	0	0.1	-	0.1	-	0.1	V
		I_O = 50 μA; V_{CC} = 4.5 V	-	0	0.1	-	0.1	-	0.1	V
		I_O = 4.0 mA; V_{CC} = 3.0 V	-	-	0.36	-	0.44	-	0.55	V
		I_O = 8.0 mA; V_{CC} = 4.5 V	-	-	0.36	-	0.44	-	0.55	V
I_I	input leakage current	V_I = 5.5 V or GND; V_{CC} = 0 V to 5.5 V	-	-	0.1	-	1.0	-	2.0	μA
I_{CC}	supply current	$V_I = V_{CC}$ or GND; I_O = 0 A; V_{CC} = 5.5 V	-	-	2.0	-	20	-	40	μA
C_I	input capacitance		-	3	10	-	10	-	10	pF
C_O	output capacitance		-	4	-	-	-	-	-	pF
74VHCT14										
V_{OH}	HIGH-level output voltage	$V_I = V_{T+}$ or V_{T-}								
		I_O = –50 μA; V_{CC} = 4.5 V	4.4	4.5	-	4.4	-	4.4	-	V
		I_O = –8.0 mA; V_{CC} = 4.5 V	3.94	-	-	3.80	-	3.70	-	V
V_{OL}	LOW-level output voltage	$V_I = V_{T+}$ or V_{T-}								
		I_O = 50 μA; V_{CC} = 4.5 V	-	0	0.1	-	0.1	-	0.1	V
		I_O = 8.0 mA; V_{CC} = 4.5 V	-	-	0.36	-	0.44	-	0.55	V
I_I	input leakage current	V_I = 5.5 V or GND; V_{CC} = 0 V to 5.5 V	-	-	0.1	-	1.0	-	2.0	μA
I_{CC}	supply current	$V_I = V_{CC}$ or GND; I_O = 0 A; V_{CC} = 5.5 V	-	-	2.0	-	20	-	40	μA
ΔI_{CC}	additional supply current	per input pin; $V_I = V_{CC}$ – 2.1 V; other pins at V_{CC} or GND; I_O = 0 A; V_{CC} = 4.5 V to 5.5 V	-	-	1.35	-	1.5	-	1.5	mA
C_I	input capacitance		-	3	10	-	10	-	10	pF
C_O	output capacitance		-	4	-	-	-	-	-	pF

© Nexperia B.V. 2017. All rights reserved

10. Dynamic characteristics

Table 7. Dynamic characteristics

Voltages are referenced to GND (ground = 0 V); for test circuit see Figure 7.

Symbol	Parameter	Conditions		25 °C			–40 °C to +85 °C		–40 °C to +125 °C		Unit
				Min	Typ[1]	Max	Min	Max	Min	Max	
74VHC14											
t_{pd}	propagation delay	nA to nY; see Figure 6	[2]								
		V_{CC} = 3.0 V to 3.6 V									
		C_L = 15 pF		-	4.3	12.8	1.0	15.0	1.0	16.0	ns
		C_L = 50 pF		-	5.8	16.3	1.0	18.0	1.0	20.5	ns
		V_{CC} = 4.5 V to 5.5 V									
		C_L = 15 pF		-	3.2	8.6	1.0	10.0	1.0	11.0	ns
		C_L = 50 pF		-	4.2	10.6	1.0	12.0	1.0	13.5	ns
C_{PD}	power dissipation capacitance	f_i = 1 MHz; V_I = GND to V_{CC}	[3]	-	10	-	-	-	-	-	pF
74VHCT14											
t_{pd}	propagation delay	nA to nY; see Figure 6	[2]								
		V_{CC} = 4.5 V to 5.5 V									
		C_L = 15 pF		-	4.0	7.0	1.0	8.0	1.0	9.0	ns
		C_L = 50 pF		-	5.4	8.0	1.0	9.0	1.0	10.0	ns
C_{PD}	power dissipation capacitance	f_i = 1 MHz; V_I = GND to V_{CC}	[3]	-	12	-	-	-	-	-	pF

[1] Typical values are measured at nominal supply voltage (V_{CC} = 3.3 V and V_{CC} = 5.0 V).

[2] t_{pd} is the same as t_{PLH} and t_{PHL}.

[3] C_{PD} is used to determine the dynamic power dissipation (P_D in μW).
$P_D = C_{PD} \times V_{CC}^2 \times f_i \times N + \Sigma(C_L \times V_{CC}^2 \times f_o)$ where:
f_i = input frequency in MHz;
f_o = output frequency in MHz;
C_L = output load capacitance in pF;
V_{CC} = supply voltage in V;
N = number of inputs switching;
$\Sigma(C_L \times V_{CC}^2 \times f_o)$ = sum of the outputs.

© Nexperia B.V. 2017. All rights reserved

11. Waveforms

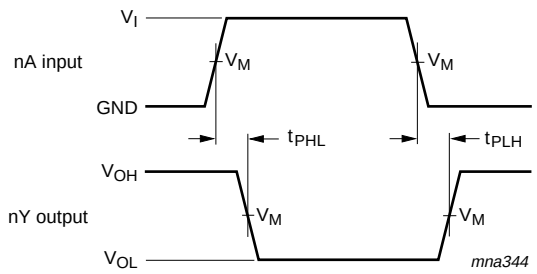

Measurement points are given in Table 8.

V_{OL} and V_{OH} are typical voltage output levels that occur with the output load.

Fig 6. Input to output propagation delays

Table 8. Measurement points

Type	Input	Output
	V_M	V_M
74VHC14	$0.5V_{CC}$	$0.5V_{CC}$
74VHCT14	1.5 V	$0.5V_{CC}$

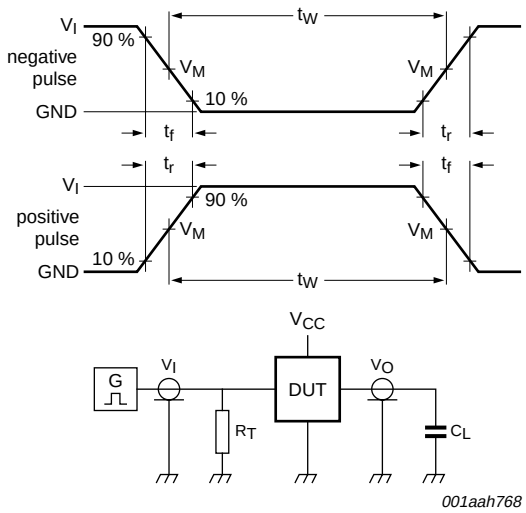

Test data is given in Table 9.

Definitions test circuit:

R_T = Termination resistance should be equal to output impedance Z_o of the pulse generator

C_L = Load capacitance including jig and probe capacitance

Fig 7. Load circuitry for measuring switching times

© Nexperia B.V. 2017. All rights reserved

Table 9. Test data

Type	Input		Load	Test
	V_I	t_r, t_f	C_L	
74VHC14	V_{CC}	≤ 3.0 ns	50 pF, 15 pF	t_{PLH}, t_{PHL}
74VHCT14	3.0 V	≤ 3.0 ns	50 pF, 15 pF	t_{PLH}, t_{PHL}

12. Transfer characteristics

Table 10. Transfer characteristics

At recommended operating conditions; voltages are referenced to GND (ground = 0 V); see Figure 8 and Figure 9.

Symbol	Parameter	Conditions	25 °C			−40 °C to +85 °C		−40 °C to +125 °C		Unit
			Min	Typ	Max	Min	Max	Min	Max	
74VHC14										
V_{T+}	positive-going threshold voltage	V_{CC} = 3.0 V	-	-	2.2	-	2.2	-	2.2	V
		V_{CC} = 4.5 V	-	-	3.15	-	3.15	-	3.15	V
		V_{CC} = 5.5 V	-	-	3.85	-	3.85	-	3.85	V
V_{T-}	negative-going threshold voltage	V_{CC} = 3.0 V	0.9	-	-	0.9	-	0.9	-	V
		V_{CC} = 4.5 V	1.35	-	-	1.35	-	1.35	-	V
		V_{CC} = 5.5 V	1.65	-	-	1.65	-	1.65	-	V
V_H	hysteresis voltage	V_{CC} = 3.0 V	0.3	-	1.2	0.3	1.2	0.25	1.2	V
		V_{CC} = 4.5 V	0.4	-	1.4	0.4	1.4	0.35	1.4	V
		V_{CC} = 5.5 V	0.5	-	1.6	0.5	1.6	0.45	1.6	V
74VHCT14										
V_{T+}	positive-going threshold voltage	V_{CC} = 4.5 V	-	-	1.9	-	1.9	-	1.9	V
		V_{CC} = 5.5 V	-	-	2.1	-	2.1	-	2.1	V
V_{T-}	negative-going threshold voltage	V_{CC} = 4.5 V	0.5	-	-	0.5	-	0.5	-	V
		V_{CC} = 5.5 V	0.6	-	-	0.6	-	0.6	-	V
V_H	hysteresis voltage	V_{CC} = 4.5 V	0.4	-	1.4	0.4	1.4	0.35	1.4	V
		V_{CC} = 5.5 V	0.4	-	1.5	0.4	1.5	0.35	1.5	V

13. Transfer characteristics waveforms

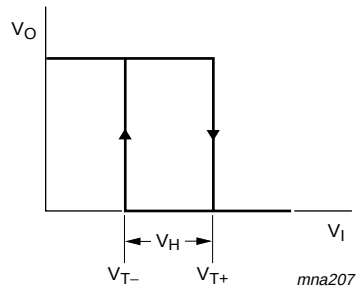

Fig 8. Transfer characteristics

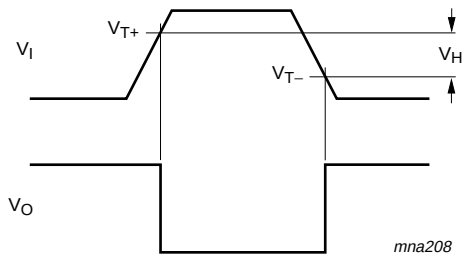

Fig 9. Transfer characteristics definitions

© Nexperia B.V. 2017. All rights reserved

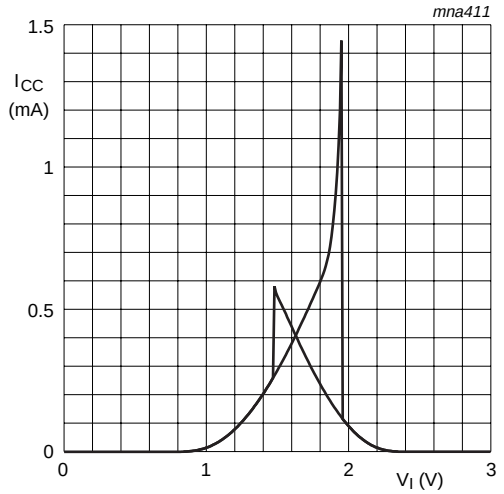

a. V_{CC} = 3.0 V

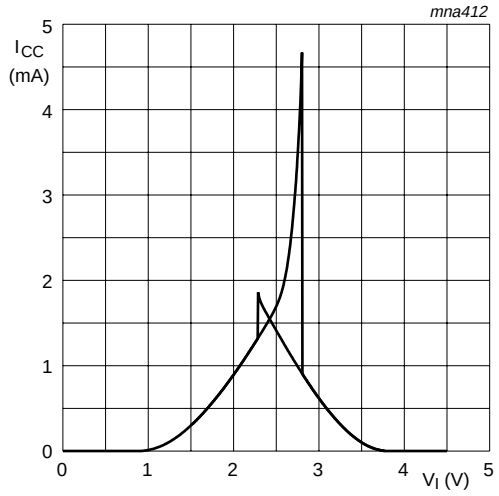

b. V_{CC} = 4.5 V

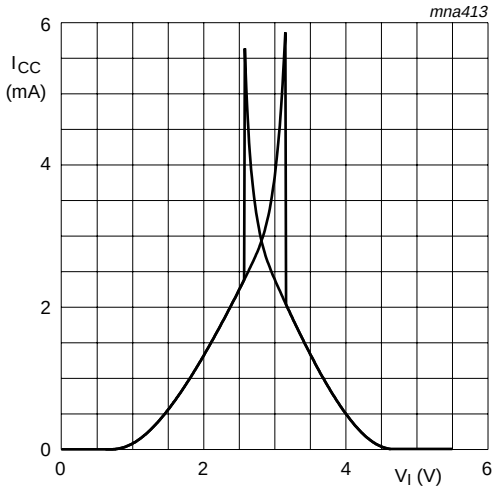

c. V_{CC} = 5.5 V

Fig 10. Typical 74VHC transfer characteristics

© Nexperia B.V. 2017. All rights reserved

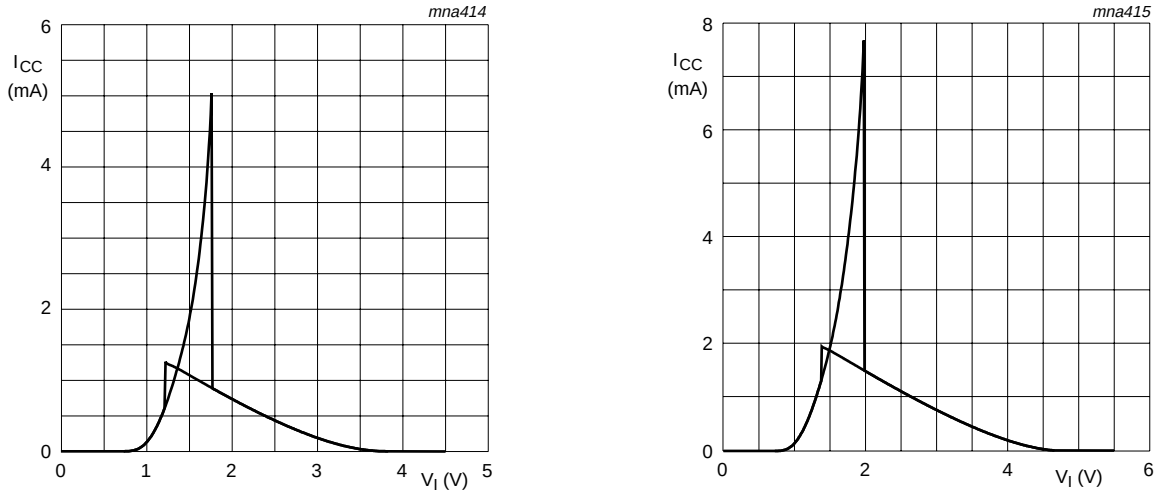

a. V_{CC} = 4.5 V

b. V_{CC} = 5.5 V

Fig 11. Typical 74VHCT transfer characteristics

14. Application information

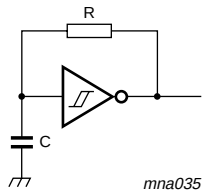

For 74VHC14: $f = \frac{1}{T} \approx \frac{1}{0.55 \times RC}$

For 74VHCT14: $f = \frac{1}{T} \approx \frac{1}{0.60 \times RC}$

Fig 12. Relaxation oscillator

© Nexperia B.V. 2017. All rights reserved

15. Package outline

SO14: plastic small outline package; 14 leads; body width 3.9 mm **SOT108-1**

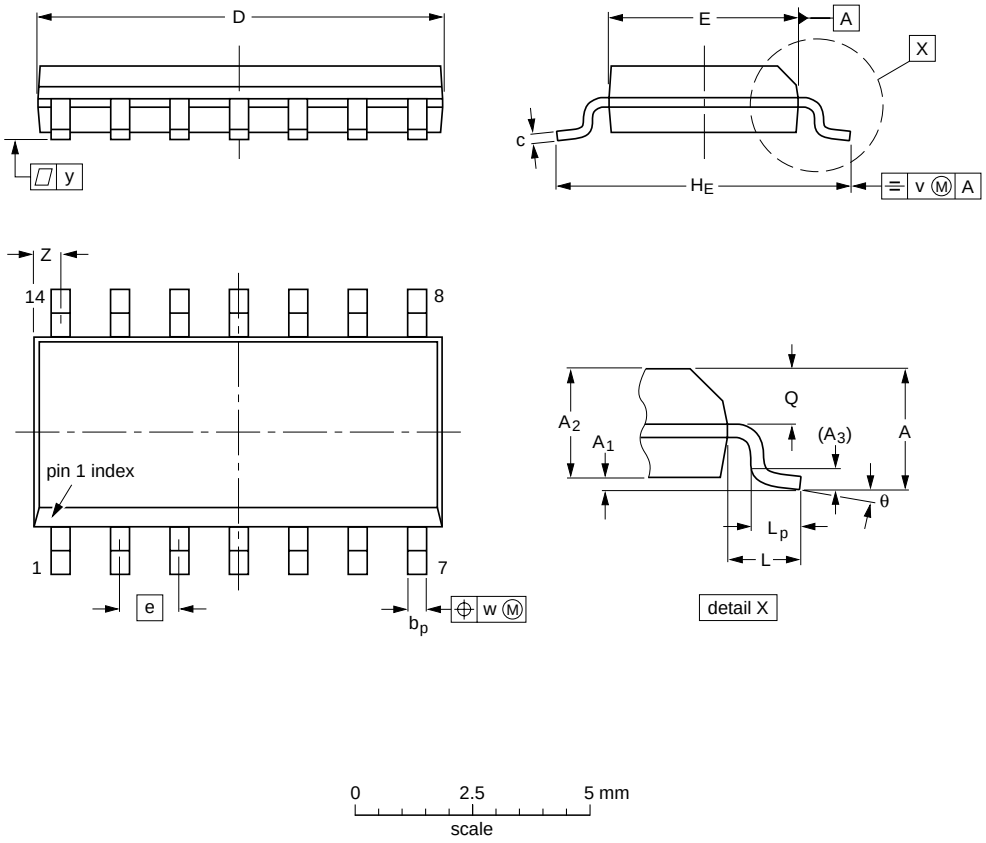

DIMENSIONS (inch dimensions are derived from the original mm dimensions)

UNIT	A max.	A_1	A_2	A_3	b_p	c	D(1)	E(1)	e	H_E	L	L_p	Q	v	w	y	Z(1)	θ
mm	1.75	0.25 0.10	1.45 1.25	0.25	0.49 0.36	0.25 0.19	8.75 8.55	4.0 3.8	1.27	6.2 5.8	1.05	1.0 0.4	0.7 0.6	0.25	0.25	0.1	0.7 0.3	8° 0°
inches	0.069	0.010 0.004	0.057 0.049	0.01	0.019 0.014	0.0100 0.0075	0.35 0.34	0.16 0.15	0.05	0.244 0.228	0.041	0.039 0.016	0.028 0.024	0.01	0.01	0.004	0.028 0.012	

Note

1. Plastic or metal protrusions of 0.15 mm (0.006 inch) maximum per side are not included.

OUTLINE VERSION	REFERENCES				EUROPEAN PROJECTION	ISSUE DATE
	IEC	JEDEC	JEITA			
SOT108-1	076E06	MS-012				~~99-12-27~~ 03-02-19

Fig 13. Package outline SOT108-1 (SO14)

© Nexperia B.V. 2017. All rights reserved

TSSOP14: plastic thin shrink small outline package; 14 leads; body width 4.4 mm **SOT402-1**

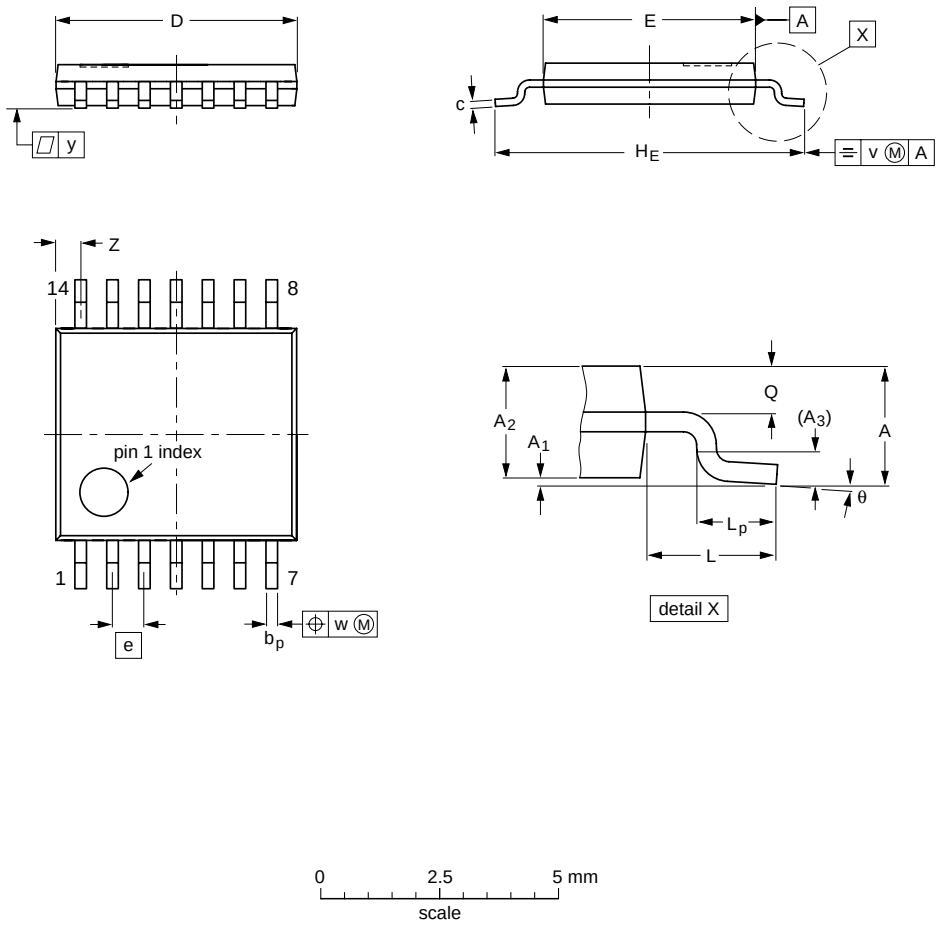

DIMENSIONS (mm are the original dimensions)

UNIT	A max.	A_1	A_2	A_3	b_p	c	D (1)	E (2)	e	H_E	L	L_p	Q	v	w	y	Z (1)	θ
mm	1.1	0.15 0.05	0.95 0.80	0.25	0.30 0.19	0.2 0.1	5.1 4.9	4.5 4.3	0.65	6.6 6.2	1	0.75 0.50	0.4 0.3	0.2	0.13	0.1	0.72 0.38	8° 0°

Notes

1. Plastic or metal protrusions of 0.15 mm maximum per side are not included.
2. Plastic interlead protrusions of 0.25 mm maximum per side are not included.

OUTLINE VERSION	REFERENCES				EUROPEAN PROJECTION	ISSUE DATE
	IEC	JEDEC	JEITA			
SOT402-1		MO-153				~~99-12-27~~ 03-02-18

Fig 14. Package outline SOT402-1 (TSSOP14)

© Nexperia B.V. 2017. All rights reserved

DHVQFN14: plastic dual in-line compatible thermal enhanced very thin quad flat package; no leads; 14 terminals; body 2.5 x 3 x 0.85 mm **SOT762-1**

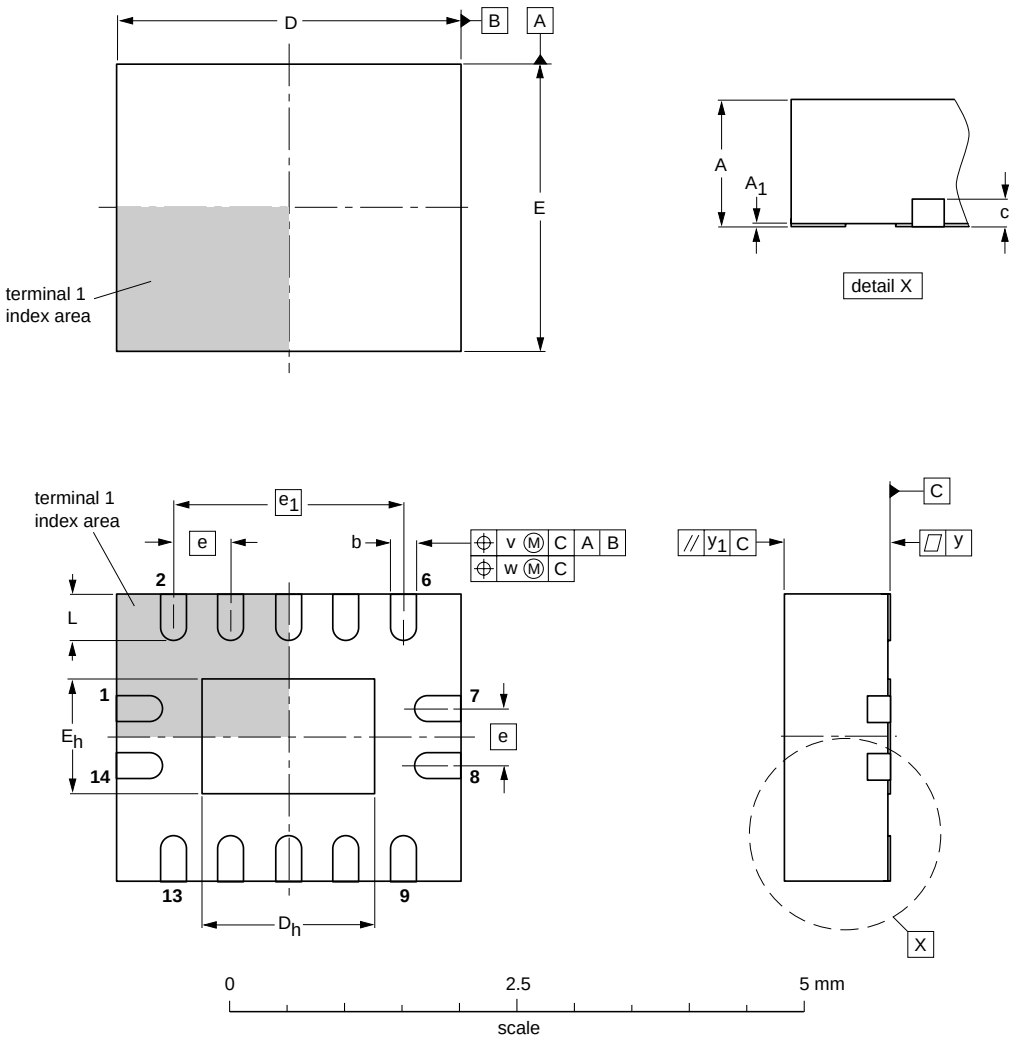

DIMENSIONS (mm are the original dimensions)

UNIT	A(1) max.	A_1	b	c	D(1)	D_h	E(1)	E_h	e	e_1	L	v	w	y	y_1
mm	1	0.05 0.00	0.30 0.18	0.2	3.1 2.9	1.65 1.35	2.6 2.4	1.15 0.85	0.5	2	0.5 0.3	0.1	0.05	0.05	0.1

Note

1. Plastic or metal protrusions of 0.075 mm maximum per side are not included.

OUTLINE VERSION	REFERENCES				EUROPEAN PROJECTION	ISSUE DATE
	IEC	JEDEC	JEITA			
SOT762-1	- - -	MO-241	- - -			~~02-10-17~~ 03-01-27

Fig 15. Package outline SOT762-1 (DHVQFN14)

© Nexperia B.V. 2017. All rights reserved

16. Abbreviations

Table 11. Abbreviations

Acronym	Description
CDM	Charged Device Model
CMOS	Complementary Metal-Oxide Semiconductor
DUT	Device Under Test
ESD	ElectroStatic Discharge
HBM	Human Body Model
LSTTL	Low-power Schottky Transistor-Transistor Logic
MM	Machine Model

17. Revision history

Table 12. Revision history

Document ID	Release date	Data sheet status	Change notice	Supersedes
74VHC_VHCT14_1	20090817	Product data sheet	-	-

© Nexperia B.V. 2017. All rights reserved

18. Legal information

18.1 Data sheet status

Document status[1][2]	Product status[3]	Definition
Objective [short] data sheet	Development	This document contains data from the objective specification for product development.
Preliminary [short] data sheet	Qualification	This document contains data from the preliminary specification.
Product [short] data sheet	Production	This document contains the product specification.

[1] Please consult the most recently issued document before initiating or completing a design.

[2] The term 'short data sheet' is explained in section "Definitions".

[3] The product status of device(s) described in this document may have changed since this document was published and may differ in case of multiple devices. The latest product status information is available on the Internet at URL http://www.nexperia.com.

18.2 Definitions

Draft — The document is a draft version only. The content is still under internal review and subject to formal approval, which may result in modifications or additions. Nexperia does not give any representations or warranties as to the accuracy or completeness of information included herein and shall have no liability for the consequences of use of such information.

Short data sheet — A short data sheet is an extract from a full data sheet with the same product type number(s) and title. A short data sheet is intended for quick reference only and should not be relied upon to contain detailed and full information. For detailed and full information see the relevant full data sheet, which is available on request via the local Nexperia sales office. In case of any inconsistency or conflict with the short data sheet, the full data sheet shall prevail.

18.3 Disclaimers

General — Information in this document is believed to be accurate and reliable. However, Nexperia does not give any representations or warranties, expressed or implied, as to the accuracy or completeness of such information and shall have no liability for the consequences of use of such information.

Right to make changes — Nexperia reserves the right to make changes to information published in this document, including without limitation specifications and product descriptions, at any time and without notice. This document supersedes and replaces all information supplied prior to the publication hereof.

Suitability for use — Nexperia products are not designed, authorized or warranted to be suitable for use in medical, military, aircraft, space or life support equipment, nor in applications where failure or malfunction of a Nexperia product can reasonably be expected to result in personal injury, death or severe property or environmental damage. Nexperia accepts no liability for inclusion and/or use of Nexperia products in such equipment or applications and therefore such inclusion and/or use is at the customer's own risk.

Applications — Applications that are described herein for any of these products are for illustrative purposes only. Nexperia makes no representation or warranty that such applications will be suitable for the specified use without further testing or modification.

Limiting values — Stress above one or more limiting values (as defined in the Absolute Maximum Ratings System of IEC 60134) may cause permanent damage to the device. Limiting values are stress ratings only and operation of the device at these or any other conditions above those given in the Characteristics sections of this document is not implied. Exposure to limiting values for extended periods may affect device reliability.

Terms and conditions of sale — Nexperia products are sold subject to the general terms and conditions of commercial sale, as published at http://www.nexperia.com/profile/terms, including those pertaining to warranty, intellectual property rights infringement and limitation of liability, unless explicitly otherwise agreed to in writing by Nexperia. In case of any inconsistency or conflict between information in this document and such terms and conditions, the latter will prevail.

No offer to sell or license — Nothing in this document may be interpreted or construed as an offer to sell products that is open for acceptance or the grant, conveyance or implication of any license under any copyrights, patents or other industrial or intellectual property rights.

Export control — This document as well as the item(s) described herein may be subject to export control regulations. Export might require a prior authorization from national authorities.

18.4 Trademarks

Notice: All referenced brands, product names, service names and trademarks are the property of their respective owners.

19. Contact information

For more information, please visit: **http://www.nexperia.com**

For sales office addresses, please send an email to: **salesaddresses@nexperia.com**

© Nexperia B.V. 2017. All rights reserved

20. Contents

1 General description 1
2 Features 1
3 Ordering information 2
4 Functional diagram 2
5 Pinning information 3
5.1 Pinning 3
5.2 Pin description 3
6 Functional description 4
7 Limiting values 4
8 Recommended operating conditions 4
9 Static characteristics 5
10 Dynamic characteristics 6
11 Waveforms 7
12 Transfer characteristics 8
13 Transfer characteristics waveforms 8
14 Application information 10
15 Package outline 11
16 Abbreviations 14
17 Revision history 14
18 Legal information 15
18.1 Data sheet status 15
18.2 Definitions 15
18.3 Disclaimers 15
18.4 Trademarks 15
19 Contact information 15
20 Contents 16

© Nexperia B.V. 2017. All rights reserved

For more information, please visit: http://www.nexperia.com
For sales office addresses, please send an email to: salesaddresses@nexperia.com
Date of release: 17 August 2009

Looking for pricing, stock, or lifecycle information?

Click below to explore more details on WIN SOURCE:

- View 74VHC14PW,118 on WIN SOURCE
- Nexperia USA Inc. Information

Optimize Your Supply Chain with WIN SOURCE Solutions

- Global Sourcing Solution
- Obsolete Management
- Cost Control Management
- Shortage Management
- Alternative Solution
- Excess Inventory Management