THE DATASHEET OF

BLF881S,112

www.win-source.net 0086-755-83957316

BLF881; BLF881S

UHF power LDMOS transistor

Rev. 4 — 1 September 2015

AMPLEON

Product data sheet

1. Product profile

1.1 General description

A 140 W LDMOS RF power transistor for broadcast transmitter applications and industrial applications. The transistor can deliver 140 W from HF to 1 GHz. The excellent ruggedness and broadband performance of this device makes it ideal for digital transmitter applications.

Table 1. Typical performance

RF performance at V_{DS} = 50 V in a common-source 860 MHz test circuit.

Mode of operation	f (MHz)	P_L (W)	$P_{L(PEP)}$ (W)	$P_{L(AV)}$ (W)	G_p (dB)	η_D (%)	IMD3 (dBc)	IMD_{shldr} (dBc)
2-tone, class AB	f_1 = 860; f_2 = 860.1	-	140	-	21	49	–34	-
DVB-T (8k OFDM)	858	-	-	33	21	34	-	–33[1]

[1] Measured [dBc] with delta marker at 4.3 MHz from center frequency.

CAUTION

This device is sensitive to ElectroStatic Discharge (ESD). Therefore care should be taken during transport and handling.

1.2 Features and benefits

- 2-Tone performance at 860 MHz, a drain-source voltage V_{DS} of 50 V and a quiescent drain current I_{Dq} = 0.5 A:
  - Peak envelope power load power = 140 W
  - Power gain = 21 dB
  - Drain efficiency = 49 %
  - Third order intermodulation distortion = –34 dBc
- DVB performance at 858 MHz, a drain-source voltage V_{DS} of 50 V and a quiescent drain current I_{Dq} = 0.5 A:
  - Average output power = 33 W
  - Power gain = 21 dB
  - Drain efficiency = 34 %
  - Shoulder distance = –33 dBc (4.3 MHz from center frequency)
- Integrated ESD protection
- Excellent ruggedness
- High power gain

- High efficiency
- Excellent reliability
- Easy power control
- Compliant to Directive 2002/95/EC, regarding Restriction of Hazardous Substances (RoHS)

1.3 Applications

- Communication transmitter applications in the UHF band
- Industrial applications in the UHF band

2. Pinning information

Table 2. Pinning

Pin	Description		Simplified outline	Graphic symbol
BLF881 (SOT467C)				
1	drain			
2	gate			
3	source	[1]		
BLF881S (SOT467B)				
1	drain		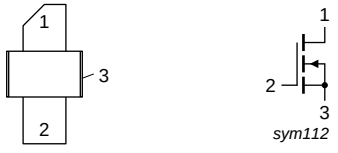	
2	gate			
3	source	[1]		

[1] Connected to flange.

3. Ordering information

Table 3. Ordering information

Type number	Package		
	Name	Description	Version
BLF881	-	flanged LDMOST ceramic package; 2 mounting holes; 2 leads	SOT467C
BLF881S	-	earless LDMOST ceramic package; 2 leads	SOT467B

All information provided in this document is subject to legal disclaimers.

© Ampleon The Netherlands B.V. 2015. All rights reserved.

4. Limiting values

Table 4. Limiting values

In accordance with the Absolute Maximum Rating System (IEC 60134).

Symbol	Parameter	Conditions	Min	Max	Unit
V_{DS}	drain-source voltage		-	104	V
V_{GS}	gate-source voltage		–0.5	+13	V
T_{stg}	storage temperature		–65	+150	°C
T_j	junction temperature		-	200	°C

5. Thermal characteristics

Table 5. Thermal characteristics

Symbol	Parameter	Conditions		Typ	Unit
$R_{th(j-c)}$	thermal resistance from junction to case	T_{case} = 80 °C; $P_{L(AV)}$ = 70 W	[1]	0.95	K/W

[1] $R_{th(j-c)}$ is measured under RF conditions.

6. Characteristics

Table 6. DC characteristics

T_j = 25 °C unless otherwise specified.

Symbol	Parameter	Conditions		Min	Typ	Max	Unit
$V_{(BR)DSS}$	drain-source breakdown voltage	V_{GS} = 0 V; I_D = 1.35 mA	[1]	104	-	-	V
$V_{GS(th)}$	gate-source threshold voltage	V_{DS} = 10 V; I_D = 135 mA	[1]	1.4	-	2.4	V
I_{DSS}	drain leakage current	V_{GS} = 0 V; V_{DS} = 50 V		-	-	1.4	μA
I_{DSX}	drain cut-off current	V_{GS} = V_{GSth} + 3.75 V; V_{DS} = 10 V		19	21	-	A
I_{GSS}	gate leakage current	V_{GS} = 10 V; V_{DS} = 0 V		-	-	140	nA
$R_{DS(on)}$	drain-source on-state resistance	V_{GS} = V_{GSth} + 3.75 V; I_D = 4.5 A	[1]	-	210	-	mΩ
C_{iss}	input capacitance	V_{GS} = 0 V; V_{DS} = 50 V; f = 1 MHz		-	100	-	pF
C_{oss}	output capacitance	V_{GS} = 0 V; V_{DS} = 50 V; f = 1 MHz		-	33.5	-	pF
C_{rss}	reverse transfer capacitance	V_{GS} = 0 V; V_{DS} = 50 V; f = 1 MHz		-	1	-	pF

[1] I_D is the drain current.

Table 7. RF characteristics

T_h = 25 °C unless otherwise specified.

Symbol	Parameter	Conditions	Min	Typ	Max	Unit
2-Tone, class AB						
V_{DS}	drain-source voltage		-	50	-	V
I_{Dq}	quiescent drain current		-	0.5	-	A
$P_{L(PEP)}$	peak envelope power load power		-	140	-	W
G_p	power gain		20	21	-	dB
η_D	drain efficiency		45	49	-	%
IMD3	third-order intermodulation distortion		-	–34	–30	dBc

All information provided in this document is subject to legal disclaimers.

© Ampleon The Netherlands B.V. 2015. All rights reserved.

Table 7. RF characteristics *...continued*

T_h = 25 °C unless otherwise specified.

Symbol	Parameter	Conditions		Min	Typ	Max	Unit
DVB-T (8k OFDM)							
V_{DS}	drain-source voltage			-	50	-	V
I_{Dq}	quiescent drain current			-	0.5	-	A
$P_{L(AV)}$	average output power			-	33	-	W
G_p	power gain			20	21	-	dB
η_D	drain efficiency			30	34	-	%
IMD_{shldr}	intermodulation distortion shoulder		[1]	-	−33	−30	dBc
PAR	peak-to-average ratio		[2]	-	8.3	-	dB

[1] Measured [dBc] with delta marker at 4.3 MHz from center frequency.

[2] PAR (of output signal) at 0.01 % probability on CCDF; PAR of input signal = 9.5 dB at 0.01 % probability on CCDF.

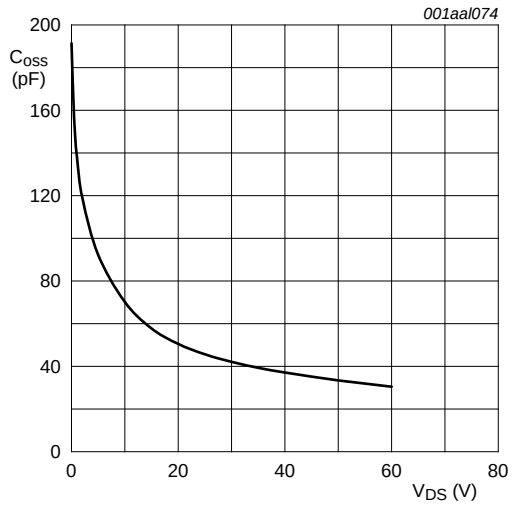

V_{GS} = 0 V; f = 1 MHz.

Fig 1. Output capacitance as a function of drain-source voltage; typical values

All information provided in this document is subject to legal disclaimers.

© Ampleon The Netherlands B.V. 2015. All rights reserved.

7. Application information

7.1 Narrowband RF figures

7.1.1 CW

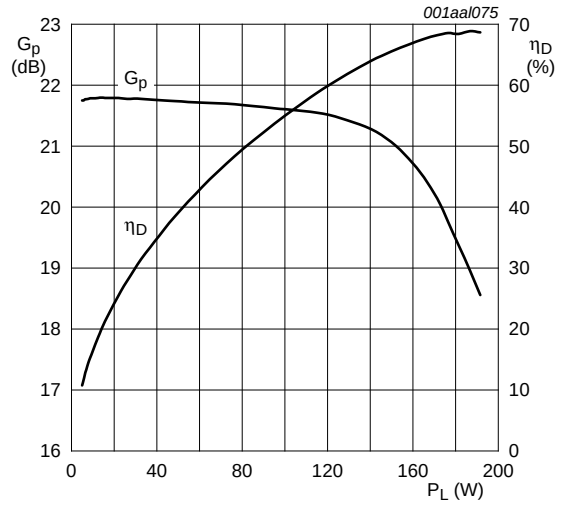

V_{DS} = 50 V; I_{Dq} = 0.5 A; measured in a common-source narrowband 860 MHz test circuit.

Fig 2. CW power gain and drain efficiency as function of load power; typical values

7.1.2 2-Tone

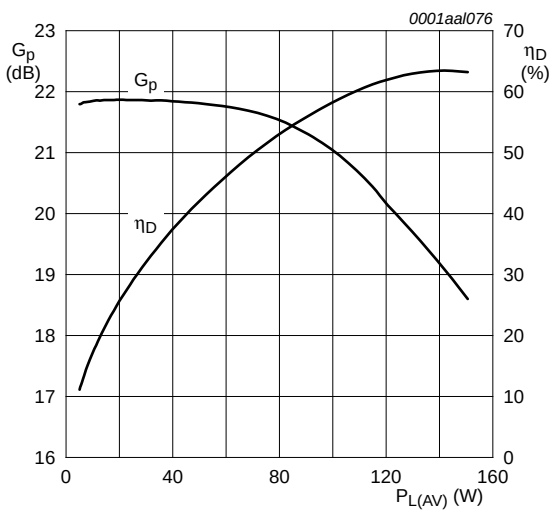

V_{DS} = 50 V; I_{Dq} = 0.5 A; measured in a common-source narrowband 860 MHz test circuit.

Fig 3. 2-Tone power gain and drain efficiency as function of average load power; typical values

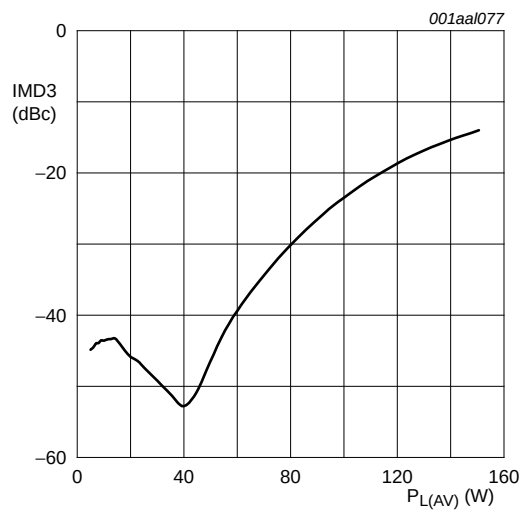

V_{DS} = 50 V; I_{Dq} = 0.5 A; measured in a common-source narrowband 860 MHz test circuit.

Fig 4. 2-Tone third order intermodulation distortion as a function of average load power; typical values

All information provided in this document is subject to legal disclaimers.

© Ampleon The Netherlands B.V. 2015. All rights reserved.

7.1.3 DVB-T

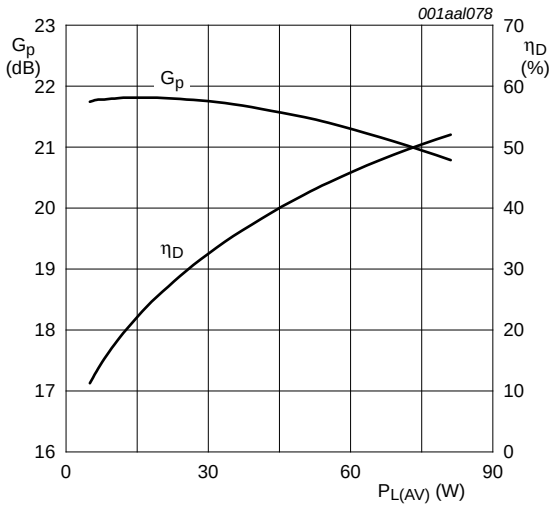

V_{DS} = 50 V; I_{Dq} = 0.5 A; measured in a common-source narrowband 860 MHz test circuit.

Fig 5. DVB-T power gain and drain efficiency as function of average load power; typical values

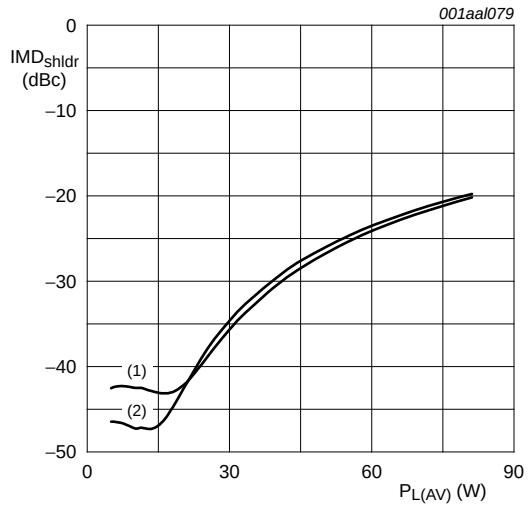

V_{DS} = 50 V; I_{Dq} = 0.5 A; measured in a common-source narrowband 860 MHz test circuit.

(1) Lower adjacent channel

(2) Upper adjacent channel

Fig 6. DVB-T shoulder distance as a function of average load power; typical values

All information provided in this document is subject to legal disclaimers.

© Ampleon The Netherlands B.V. 2015. All rights reserved.

7.2 Broadband RF figures

7.2.1 DVB-T

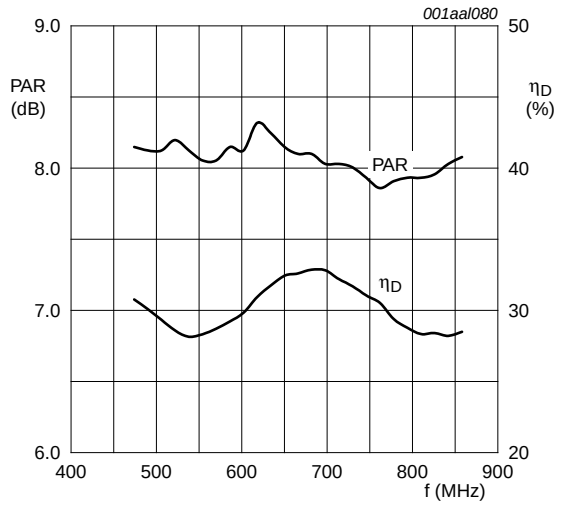

V_{DS} = 50 V; I_{Dq} = 0.35 A; $P_{L(AV)}$ = 33 W; measured in a common-source broadband test circuit as described in Section 8.

Fig 7. DVB-T PAR at 0.01 % probability on the CCDF and drain efficiency as function of frequency; typical values

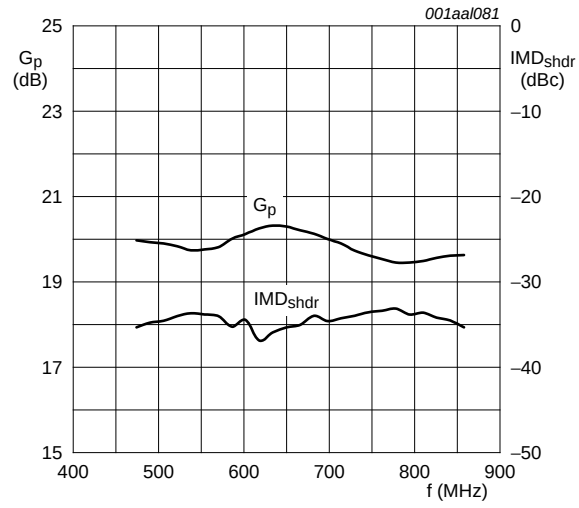

V_{DS} = 50 V; I_{Dq} = 0.35 A; $P_{L(AV)}$ = 33 W; measured in a common-source broadband test circuit as described in Section 8.

Fig 8. DVB-T power gain and shoulder distance as function of frequency; typical values

7.3 Ruggedness in class-AB operation

The BLF881 and BLF881S are capable of withstanding a load mismatch corresponding to VSWR = 10 : 1 through all phases under the following conditions: V_{DS} = 50 V; f = 860 MHz at rated power. Ruggedness is measured in the application circuit as described in Section 8.

All information provided in this document is subject to legal disclaimers.

© Ampleon The Netherlands B.V. 2015. All rights reserved.

7.4 Reliability

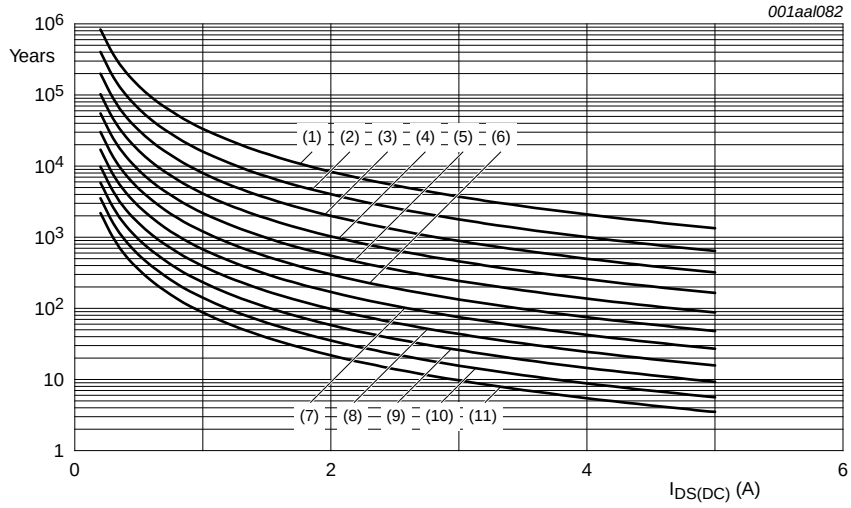

TTF (0.1 % failure fraction).

The reliability at pulsed conditions can be calculated as follows: TTF (0.1 %) × 1 / δ.

(1) T_j = 100 °C

(2) T_j = 110 °C

(3) T_j = 120 °C

(4) T_j = 130 °C

(5) T_j = 140 °C

(6) T_j = 150 °C

(7) T_j = 160 °C

(8) T_j = 170 °C

(9) T_j = 180 °C

(10) T_j = 190 °C

(11) T_j = 200 °C

Fig 9. BLF881 electromigration

All information provided in this document is subject to legal disclaimers.

© Ampleon The Netherlands B.V. 2015. All rights reserved.

8. Test information

Table 8. List of components

For test circuit, see Figure 10, Figure 11 and Figure 12.

Component	Description	Value		Remarks
C1, C2	multilayer ceramic chip capacitor	5.1 pF	[1]	
C3, C4	multilayer ceramic chip capacitor	10 pF	[2]	
C5	multilayer ceramic chip capacitor	6.8 pF	[1]	
C6	multilayer ceramic chip capacitor	4.7 pF	[1]	
C7	multilayer ceramic chip capacitor	2.7 pF	[1]	
C8, C9, C10, C25, C26	multilayer ceramic chip capacitor	100 pF	[1]	
C11, C27	multilayer ceramic chip capacitor	10 μF		TDK C570X7R1H106KT000N or capacitor of same quality.
C12	electrolytic capacitor	470 μF; 63 V		
C20	multilayer ceramic chip capacitor	10 pF	[3]	
C21	multilayer ceramic chip capacitor	8.2 pF	[3]	
C22	trimmer	0.6 pF to 4.5 pF		Tekelec
C23	multilayer ceramic chip capacitor	6.8 pF	[3]	
C24	multilayer ceramic chip capacitor	3.9 pF	[3]	
L1	stripline	-	[4]	(W × L) 7 mm × 15 mm
L2	stripline	-	[4]	(W × L) 2.4 mm × 9 mm
L3	stripline	-	[4]	(W × L) 2.4 mm × 10 mm
L4	stripline	-	[4]	(W × L) 2.4 mm × 25 mm
L5	stripline	-	[4]	(W × L) 2.4 mm × 10 mm
L6	stripline	-	[4]	(W × L) 2.0 mm × 20 mm
L7	stripline	-	[4]	(W × L) 2.0 mm × 21 mm
L20	stripline	-	[4]	(W × L) 7 mm × 12 mm
L21	stripline	-	[4]	(W × L) 2.4 mm × 13 mm
L22	stripline	-	[4]	(W × L) 2.4 mm × 31 mm
L23	stripline	-	[4]	(W × L) 2.4 mm × 5 mm
R1	resistor	100 Ω		
R2	resistor	10 kΩ		

[1] American technical ceramics type 100B or capacitor of same quality.

[2] American technical ceramics type 180R or capacitor of same quality.

[3] American technical ceramics type 100A or capacitor of same quality.

[4] Printed-Circuit Board (PCB): Rogers 5880; ε_r = 2.2 F/m; height = 0.79 mm; Cu (top/bottom metallization); thickness copper plating = 35 μm.

All information provided in this document is subject to legal disclaimers.

© Ampleon The Netherlands B.V. 2015. All rights reserved.

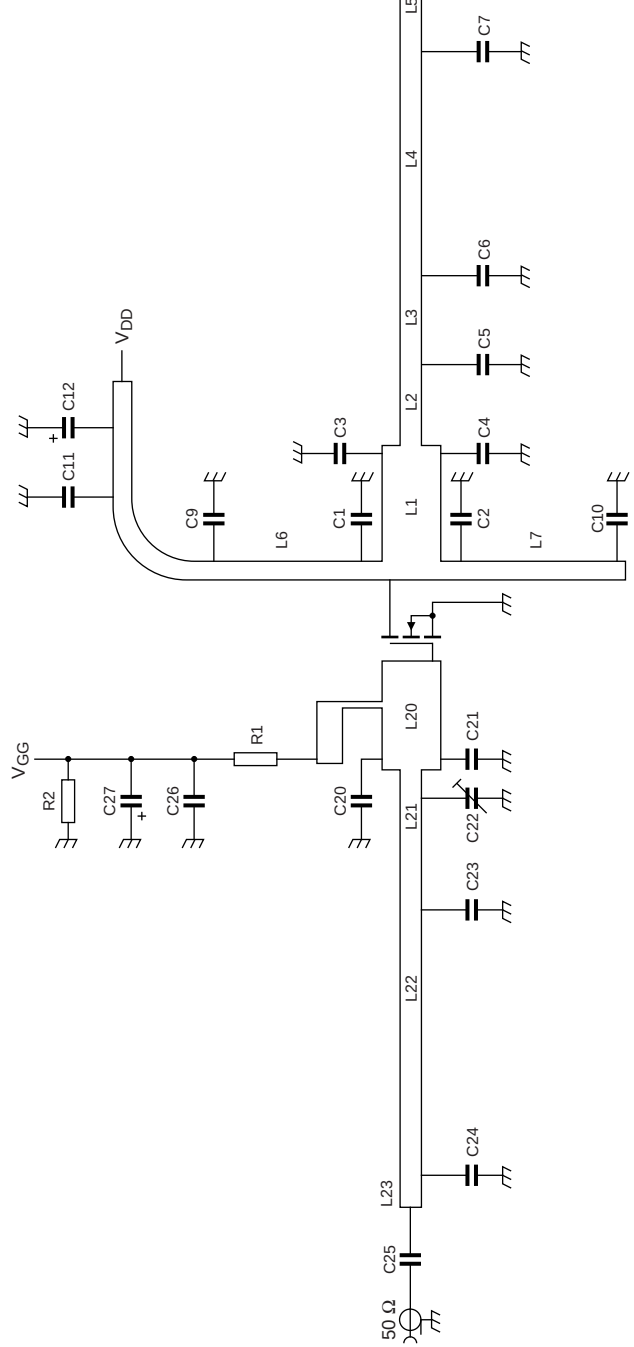

See Table 8 for a list of components.

Fig 10. Class-AB common-source broadband amplifier

All information provided in this document is subject to legal disclaimers.

© Ampleon The Netherlands B.V. 2015. All rights reserved.

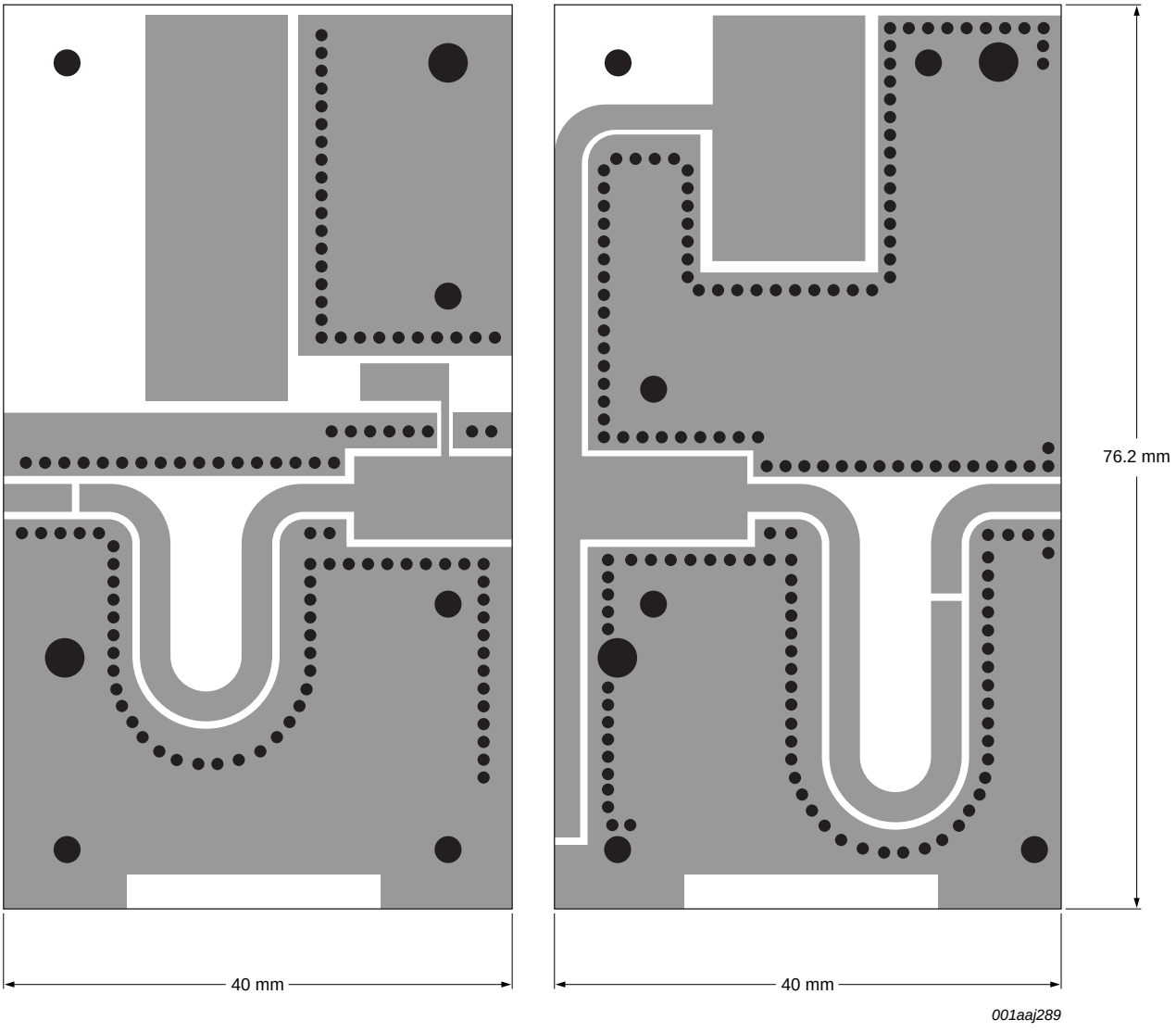

Fig 11. Printed-Circuit Board (PCB) for class-AB common source amplifier

All information provided in this document is subject to legal disclaimers.

© Ampleon The Netherlands B.V. 2015. All rights reserved.

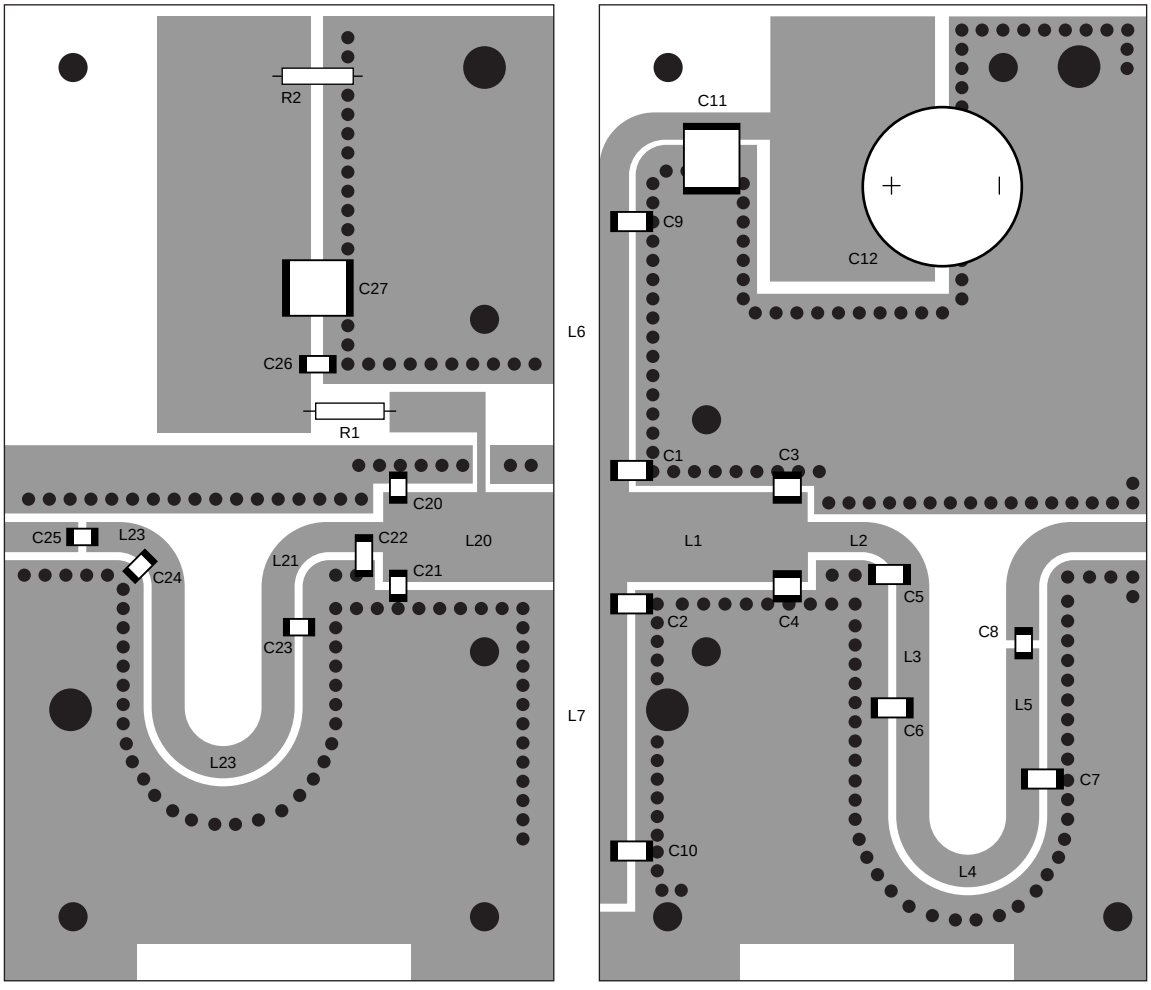

See Table 8 for a list of components.

Fig 12. Component layout for class-AB common source amplifier

All information provided in this document is subject to legal disclaimers.

© Ampleon The Netherlands B.V. 2015. All rights reserved.

9. Package outline

Flanged ceramic package; 2 mounting holes; 2 leads **SOT467C**

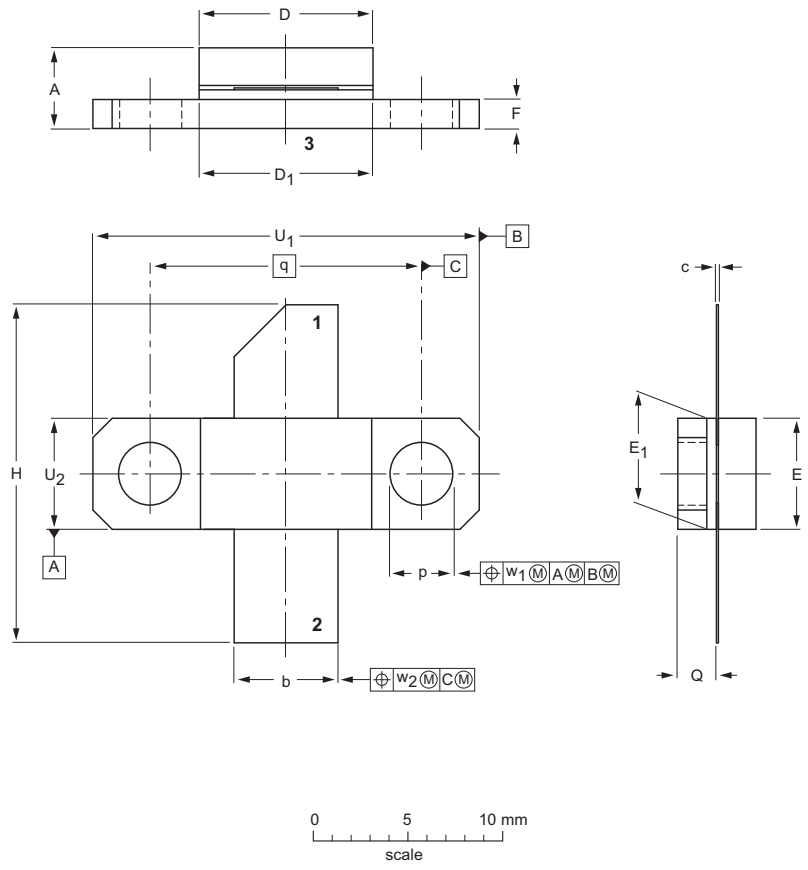

DIMENSIONS (millimetre dimensions are derived from the original inch dimensions)

UNIT	A	b	c	D	D_1	E	E_1	F	H	p	Q	q	U_1	U_2	w_1	w_2
mm	4.67 3.94	5.59 5.33	0.15 0.10	9.25 9.04	9.27 9.02	5.92 5.77	5.97 5.72	1.65 1.40	18.54 17.02	3.43 3.18	2.21 1.96	14.27	20.45 20.19	5.97 5.72	0.25	0.51
inch	0.184 0.155	0.220 0.210	0.006 0.004	0.364 0.356	0.365 0.355	0.233 0.227	0.235 0.225	0.065 0.055	0.73 0.67	0.135 0.125	0.087 0.077	0.562	0.805 0.795	0.235 0.225	0.010	0.020

OUTLINE VERSION	REFERENCES				EUROPEAN PROJECTION	ISSUE DATE
	IEC	JEDEC	EIAJ			
SOT467C						~~99-12-28~~ 12-05-02

Fig 13. Package outline SOT467C

All information provided in this document is subject to legal disclaimers.

© Ampleon The Netherlands B.V. 2015. All rights reserved.

Earless ceramic package; 2 leads **SOT467B**

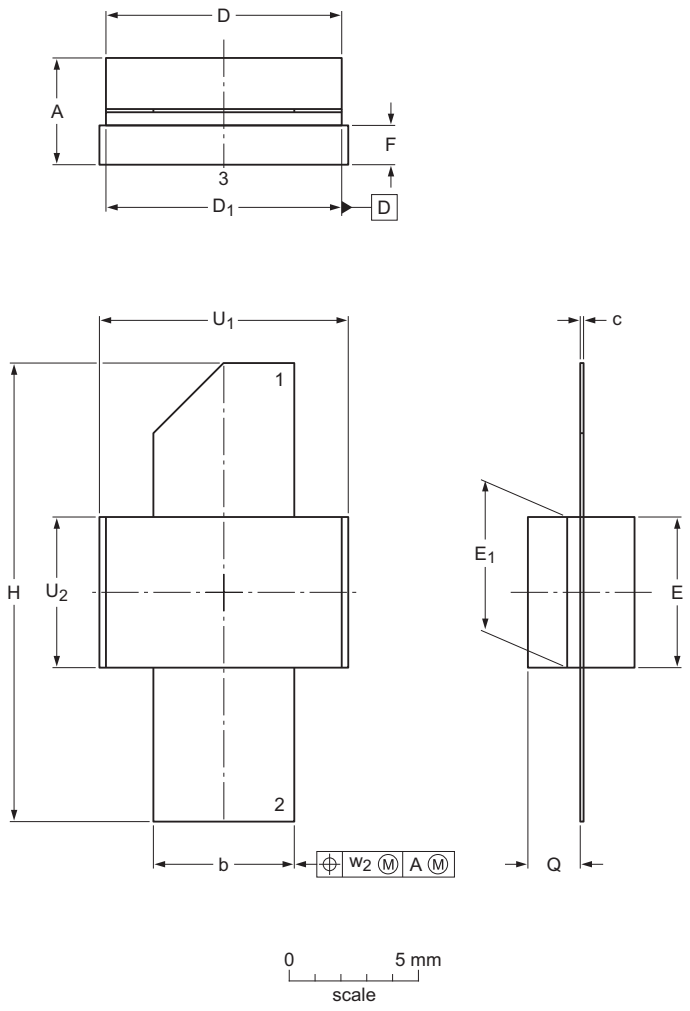

Dimensions

Unit(1)		A	b	c	D	D_1	E	E_1	F	H	Q	U_1	U_2	w_2
mm	max	4.67	5.59	0.15	9.25	9.27	5.92	5.97	1.65	18.29	2.21	9.78	5.97	0.25
	nom													
	min	3.94	5.33	0.10	9.04	9.02	5.77	5.72	1.40	17.27	1.96	9.53	5.72	
inches	max	0.184	0.22	0.006	0.364	0.365	0.233	0.235	0.065	0.72	0.087	0.385	0.235	0.01
	nom													
	min	0.155	0.21	0.004	0.356	0.355	0.227	0.225	0.055	0.68	0.077	0.375	0.225	

Note
1. millimeter dimensions are derived from the original inch dimensions.

sot467b_po

Outline version	References				European projection	Issue date
	IEC	JEDEC	JEITA			
SOT467B						~~11-08-18~~ 12-05-01

Fig 14. Package outline SOT467B

All information provided in this document is subject to legal disclaimers.

© Ampleon The Netherlands B.V. 2015. All rights reserved.

10. Abbreviations

Table 9. Abbreviations

Acronym	Description
CW	Continuous Wave
CCDF	Complementary Cumulative Distribution Function
DVB	Digital Video Broadcast
DVB-T	Digital Video Broadcast - Terrestrial
ESD	ElectroStatic Discharge
HF	High Frequency
IMD3	Third order InterModulation Distortion
LDMOS	Laterally Diffused Metal-Oxide Semiconductor
LDMOST	Laterally Diffused Metal-Oxide Semiconductor Transistor
OFDM	Orthogonal Frequency Division Multiplexing
PAR	Peak-to-Average power Ratio
PEP	Peak Envelope Power
RF	Radio Frequency
TTF	Time To Failure
UHF	Ultra High Frequency
VSWR	Voltage Standing-Wave Ratio

11. Revision history

Table 10. Revision history

Document ID	Release date	Data sheet status	Change notice	Supersedes
BLF881_BLF881S#4	20150901	Product data sheet	-	BLF881_BLF881S v.3
Modifications:	• The format of this document has been redesigned to comply with the new identity guidelines of Ampleon. • Legal texts have been adapted to the new company name where appropriate.			
BLF881_BLF881S v.3	20101207	Product data sheet	-	BLF881_BLF881S v.2
BLF881_BLF881S v.2	20100210	Product data sheet	-	BLF881_BLF881S v.1
BLF881_BLF881S v.1	20091210	Preliminary data sheet	-	-

All information provided in this document is subject to legal disclaimers.

© Ampleon The Netherlands B.V. 2015. All rights reserved.

12. Legal information

12.1 Data sheet status

Document status[1][2]	Product status[3]	Definition
Objective [short] data sheet	Development	This document contains data from the objective specification for product development.
Preliminary [short] data sheet	Qualification	This document contains data from the preliminary specification.
Product [short] data sheet	Production	This document contains the product specification.

[1] Please consult the most recently issued document before initiating or completing a design.

[2] The term 'short data sheet' is explained in section "Definitions".

[3] The product status of device(s) described in this document may have changed since this document was published and may differ in case of multiple devices. The latest product status information is available on the Internet at URL http://www.ampleon.com.

12.2 Definitions

Draft — The document is a draft version only. The content is still under internal review and subject to formal approval, which may result in modifications or additions. Ampleon does not give any representations or warranties as to the accuracy or completeness of information included herein and shall have no liability for the consequences of use of such information.

Short data sheet — A short data sheet is an extract from a full data sheet with the same product type number(s) and title. A short data sheet is intended for quick reference only and should not be relied upon to contain detailed and full information. For detailed and full information see the relevant full data sheet, which is available on request via the local Ampleon sales office. In case of any inconsistency or conflict with the short data sheet, the full data sheet shall prevail.

Product specification — The information and data provided in a Product data sheet shall define the specification of the product as agreed between Ampleon and its customer, unless Ampleon and customer have explicitly agreed otherwise in writing. In no event however, shall an agreement be valid in which the Ampleon product is deemed to offer functions and qualities beyond those described in the Product data sheet.

12.3 Disclaimers

Limited warranty and liability — Information in this document is believed to be accurate and reliable. However, Ampleon does not give any representations or warranties, expressed or implied, as to the accuracy or completeness of such information and shall have no liability for the consequences of use of such information. Ampleon takes no responsibility for the content in this document if provided by an information source outside of Ampleon.

In no event shall Ampleon be liable for any indirect, incidental, punitive, special or consequential damages (including - without limitation - lost profits, lost savings, business interruption, costs related to the removal or replacement of any products or rework charges) whether or not such damages are based on tort (including negligence), warranty, breach of contract or any other legal theory.

Notwithstanding any damages that customer might incur for any reason whatsoever, Ampleon' aggregate and cumulative liability towards customer for the products described herein shall be limited in accordance with the *Terms and conditions of commercial sale* of Ampleon.

Right to make changes — Ampleon reserves the right to make changes to information published in this document, including without limitation specifications and product descriptions, at any time and without notice. This document supersedes and replaces all information supplied prior to the publication hereof.

Suitability for use — Ampleon products are not designed, authorized or warranted to be suitable for use in life support, life-critical or safety-critical systems or equipment, nor in applications where failure or malfunction of an Ampleon product can reasonably be expected to result in personal injury, death or severe property or environmental damage. Ampleon and its suppliers accept no liability for inclusion and/or use of Ampleon products in such equipment or applications and therefore such inclusion and/or use is at the customer's own risk.

Applications — Applications that are described herein for any of these products are for illustrative purposes only. Ampleon makes no representation or warranty that such applications will be suitable for the specified use without further testing or modification.

Customers are responsible for the design and operation of their applications and products using Ampleon products, and Ampleon accepts no liability for any assistance with applications or customer product design. It is customer's sole responsibility to determine whether the Ampleon product is suitable and fit for the customer's applications and products planned, as well as for the planned application and use of customer's third party customer(s). Customers should provide appropriate design and operating safeguards to minimize the risks associated with their applications and products.

Ampleon does not accept any liability related to any default, damage, costs or problem which is based on any weakness or default in the customer's applications or products, or the application or use by customer's third party customer(s). Customer is responsible for doing all necessary testing for the customer's applications and products using Ampleon products in order to avoid a default of the applications and the products or of the application or use by customer's third party customer(s). Ampleon does not accept any liability in this respect.

Limiting values — Stress above one or more limiting values (as defined in the Absolute Maximum Ratings System of IEC 60134) will cause permanent damage to the device. Limiting values are stress ratings only and (proper) operation of the device at these or any other conditions above those given in the Recommended operating conditions section (if present) or the Characteristics sections of this document is not warranted. Constant or repeated exposure to limiting values will permanently and irreversibly affect the quality and reliability of the device.

Terms and conditions of commercial sale — Ampleon products are sold subject to the general terms and conditions of commercial sale, as published at http://www.ampleon.com/terms, unless otherwise agreed in a valid written individual agreement. In case an individual agreement is concluded only the terms and conditions of the respective agreement shall apply. Ampleon hereby expressly objects to applying the customer's general terms and conditions with regard to the purchase of Ampleon products by customer.

No offer to sell or license — Nothing in this document may be interpreted or construed as an offer to sell products that is open for acceptance or the grant, conveyance or implication of any license under any copyrights, patents or other industrial or intellectual property rights.

Export control — This document as well as the item(s) described herein may be subject to export control regulations. Export might require a prior authorization from competent authorities.

All information provided in this document is subject to legal disclaimers.

© Ampleon The Netherlands B.V. 2015. All rights reserved.

Non-automotive qualified products — Unless this data sheet expressly states that this specific Ampleon product is automotive qualified, the product is not suitable for automotive use. It is neither qualified nor tested in accordance with automotive testing or application requirements. Ampleon accepts no liability for inclusion and/or use of non-automotive qualified products in automotive equipment or applications.

In the event that customer uses the product for design-in and use in automotive applications to automotive specifications and standards, customer (a) shall use the product without Ampleon' warranty of the product for such automotive applications, use and specifications, and (b) whenever customer uses the product for automotive applications beyond Ampleon' specifications such use shall be solely at customer's own risk, and (c) customer fully indemnifies Ampleon for any liability, damages or failed product claims resulting from customer design and use of the product for automotive applications beyond Ampleon' standard warranty and Ampleon' product specifications.

12.4 Licenses

ICs with DVB-T or DVB-T2 functionality
Use of this product in any manner that complies with the DVB-T or the DVB-T2 standard may require licenses under applicable patents of the DVB-T respectively the DVB-T2 patent portfolio, which license is available from Sisvel S.p.A., Via Sestriere 100, 10060 None (TO), Italy, and under applicable patents of other parties.

12.5 Trademarks

Notice: All referenced brands, product names, service names and trademarks are the property of their respective owners.

Any reference or use of any 'NXP' trademark in this document or in or on the surface of Ampleon products does not result in any claim, liability or entitlement vis-à-vis the owner of this trademark. Ampleon is no longer part of the NXP group of companies and any reference to or use of the 'NXP' trademarks will be replaced by reference to or use of Ampleon's own Any reference or use of any 'NXP' trademark in this document or in or on the surface of Ampleon products does not result in any claim, liability or entitlement vis-à-vis the owner of this trademark. Ampleon is no longer part of the NXP group of companies and any reference to or use of the 'NXP' trademarks will be replaced by reference to or use of Ampleon's own trademarks.

13. Contact information

For more information, please visit:
http://www.ampleon.com

For sales office addresses, please visit:
http://www.ampleon.com/sales

All information provided in this document is subject to legal disclaimers.

© Ampleon The Netherlands B.V. 2015. All rights reserved.

14. Contents

1 Product profile 1
1.1 General description 1
1.2 Features and benefits 1
1.3 Applications 2
2 Pinning information 2
3 Ordering information 2
4 Limiting values 3
5 Thermal characteristics 3
6 Characteristics 3
7 Application information 5
7.1 Narrowband RF figures 5
7.1.1 CW 5
7.1.2 2-Tone 5
7.1.3 DVB-T 6
7.2 Broadband RF figures 7
7.2.1 DVB-T 7
7.3 Ruggedness in class-AB operation 7
7.4 Reliability 8
8 Test information 9
9 Package outline 13
10 Abbreviations 15
11 Revision history 15
12 Legal information 16
12.1 Data sheet status 16
12.2 Definitions 16
12.3 Disclaimers 16
12.4 Licenses 17
12.5 Trademarks 17
13 Contact information 17
14 Contents 18

Please be aware that important notices concerning this document and the product(s) described herein, have been included in section ‘Legal information’.

© Ampleon The Netherlands B.V. 2015. All rights reserved.

For more information, please visit: http://www.ampleon.com
For sales office addresses, please visit: http://www.ampleon.com/sales

Date of release: 1 September 2015
Document identifier: BLF881_BLF881S#4

Looking for pricing, stock, or lifecycle information?

Click below to explore more details on WIN SOURCE:

- View BLF881S,112 on WIN SOURCE
- Ampleon USA Inc. Information

Optimize Your Supply Chain with WIN SOURCE Solutions

- Global Sourcing Solution
- Obsolete Management
- Cost Control Management
- Shortage Management
- Alternative Solution
- Excess Inventory Management