THE DATASHEET OF

DAC7632VFBT

www.win-source.net 0086-755-83957316

www.ti.com SBAS234A – FEBRUARY 2002 – REVISED APRIL 2008

16-Bit, Dual Voltage Output DIGITAL-TO-ANALOG CONVERTER

FEATURES

- LOW POWER: 4mW
- UNIPOLAR OR BIPOLAR OPERATION
- SETTLING TIME: 10µs to ±0.003% FSR
- 15-BIT LINEARITY AND MONOTONICITY: –40°C to +85°C
- PROGRAMMABLE RESET TO MID-SCALE OR ZERO-SCALE
- DOUBLE-BUFFERED DATA INPUTS

APPLICATIONS

- PROCESS CONTROL
- CLOSED-LOOP SERVO-CONTROL
- MOTOR CONTROL
- DATA ACQUISITION SYSTEMS
- DAC-PER-PIN PROGRAMMERS

DESCRIPTION

The DAC7632 is a 16-bit, dual channel, voltage output, Digital-to-Analog Converter (DAC) which provides 15-bit monotonic performance over the specified temperature range. The device accepts 24-bit serial input data, has double-buffered DAC input logic (allowing simultaneous update of both DACs), and provides a serial data output for daisy-chaining multiple devices. A programmable asynchronous reset clears all registers to a mid-scale code of 8000_H or to a zero-scale code of 0000_H. The DAC7632 can operate from a single +5V supply or from +5V and –5V supplies, providing an output range of 0V to +2.5V or –2.5V to +2.5V, respectively.

Low power and small size per DAC make the DAC7632 ideal for industrial process control, data acquisition systems, and closed-loop servo-control. The DAC7632 is available in an LQFP-32 package and specified over a –40°C to +85°C temperature range.

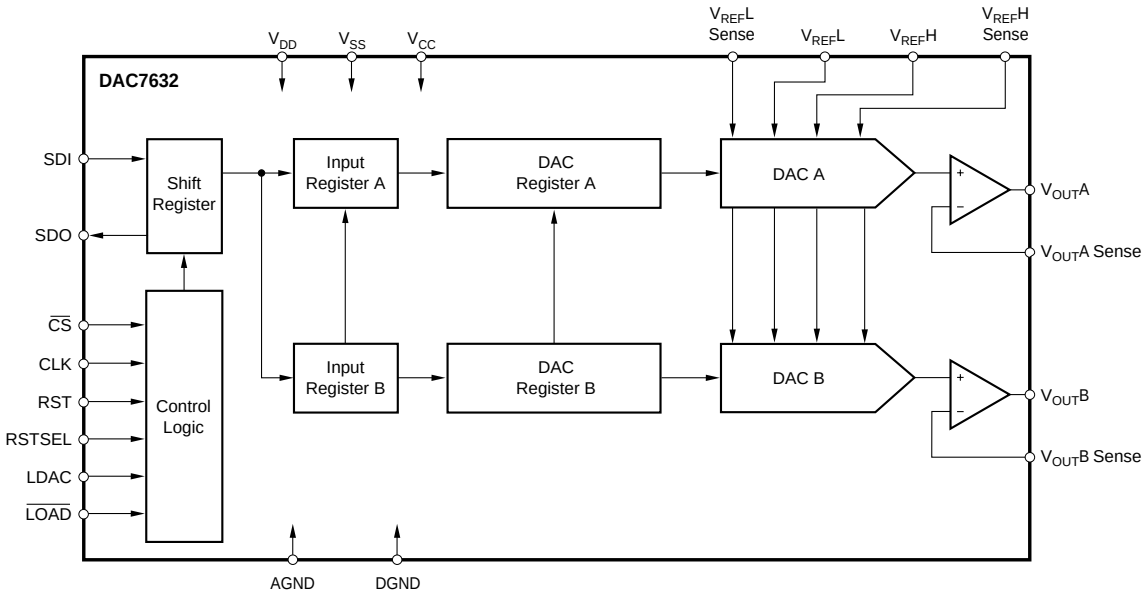

Please be aware that an important notice concerning availability, standard warranty, and use in critical applications of Texas Instruments semiconductor products and disclaimers thereto appears at the end of this data sheet.

All trademarks are the property of their respective owners.

PRODUCTION DATA information is current as of publication date. Products conform to specifications per the terms of Texas Instruments standard warranty. Production processing does not necessarily include testing of all parameters.

Copyright © 2002-2008, Texas Instruments Incorporated

ABSOLUTE MAXIMUM RATINGS[1]

V_{CC} and V_{DD} to V_{SS}	–0.3V to 11V
V_{CC} and V_{DD} to GND	–0.3V to 5.5V
$V_{REF}L$ to V_{SS}	–0.3V to (V_{CC} – V_{SS})
V_{CC} to $V_{REF}H$	–0.3V to (V_{CC} – V_{SS})
$V_{REF}H$ to $V_{REF}L$	–0.3V to (V_{CC} – V_{SS})
Digital Input Voltage to GND	–0.3V to V_{DD} + 0.3V
Digital Output Voltage to GND	–0.3V to V_{DD} + 0.3V
Maximum Junction Temperature	+150°C
Operating Temperature Range	–40°C to +85°C
Storage Temperature Range	–65°C to +125°C
Lead Temperature (soldering, 10s)	+300°C

NOTE: (1) Stresses above those listed under *Absolute Maximum Ratings* may cause permanent damage to the device. Exposure to absolute maximum conditions for extended periods may affect device reliability.

ELECTROSTATIC DISCHARGE SENSITIVITY

This integrated circuit can be damaged by ESD. Texas Instruments recommends that all integrated circuits be handled with appropriate precautions. Failure to observe proper handling and installation procedures can cause damage.

ESD damage can range from subtle performance degradation to complete device failure. Precision integrated circuits may be more susceptible to damage because very small parametric changes could cause the device not to meet its published specifications.

PACKAGE/ORDERING INFORMATION[1]

PRODUCT	MONOTONICITY	PACKAGE-LEAD	PACKAGE DESIGNATOR	SPECIFIED TEMPERATURE RANGE	PACKAGE MARKING	ORDERING NUMBER	TRANSPORT MEDIA, QUANTITY
DAC7632VF	14 Bits	LQFP-32	VF	–40°C to +85°C	DAC7632	DAC7632VFT	Tape and Reel, 250
"	"	"	"	"	"	DAC7632VFR	Tape and Reel, 1000
DAC7632VFB	15 Bits	LQFP-32	VF	–40°C to +85°C	DAC7632B	DAC7632VFBT	Tape and Reel, 250
"	"	"	"	"	"	DAC7632VFBR	Tape and Reel, 1000

NOTE: (1) For the most current package and ordering information, see the Package Option Addendum at the end of this document, or see the TI website at www.ti.com.

ELECTRICAL CHARACTERISTICS: Dual Supply

At $T_A = T_{MIN}$ to T_{MAX}, $V_{DD} = V_{CC} = +5V$, $V_{SS} = –5V$, $V_{REF}H = +2.5V$, and $V_{REF}L = –2.5V$, unless otherwise noted.

PARAMETER	CONDITIONS	DAC7632VF			DAC7632VFB			UNITS
		MIN	TYP	MAX	MIN	TYP	MAX	
ACCURACY								
Linearity Error			±3	±4		±2	±3	LSB
Linearity Match			±4			±2		LSB
Differential Linearity Error			±2	±3		±1	±2	LSB
Monotonicity, T_{MIN} to T_{MAX}		14			15			Bits
Bipolar Zero Error			±1	±3		*	*	mV
Bipolar Zero Error Drift			5	10		*	*	ppm/°C
Full-Scale Error			±1	±3		*	*	mV
Full-Scale Error Drift			5	10		*	*	ppm/°C
Bipolar Zero Matching	Channel-to-Channel Matching		±1	±3		*	*	mV
Full-Scale Matching	Channel-to-Channel Matching		±1	±3		*	*	mV
Power-Supply Rejection Ratio (PSRR)	At Full Scale		10	100		*	*	ppm/V
ANALOG OUTPUT								
Voltage Output	$R_L = 10k\Omega$	$V_{REF}L$		$V_{REF}H$	*		*	V
Output Current		–1.25		+1.25	*		*	mA
Maximum Load Capacitance	No Oscillation		500			*		pF
Short-Circuit Current			–10, +30			*		mA
Short-Circuit Duration	GND or V_{CC} or V_{SS}		Indefinite			*		
REFERENCE INPUT								
Ref High Input Voltage Range		$V_{REF}L + 1.25$		+2.5	*		*	V
Ref Low Input Voltage Range		–2.5		$V_{REF}H – 1.25$	*		*	V
Ref High Input Current			500			*		µA
Ref Low Input Current			–500			*		µA
DYNAMIC PERFORMANCE								
Settling Time	To ±0.003%, 5V Output Step		8	10		*	*	µs
Channel-to-Channel Crosstalk			0.5			*		LSB
Digital Feedthrough			2			*		nV-s
Output Noise Voltage	f = 10kHz		60			*		$nV/\sqrt{Hz}$
DAC Glitch	$7FFF_H$ to 8000_H or 8000_H to $7FFF_H$		40			*		nV-s
DIGITAL INPUT								
V_{IH}		$0.7 • V_{DD}$			*			V
V_{IL}				$0.3 • V_{DD}$			*	V
I_{IH}				±10			*	µA
I_{IL}				±10			*	µA
DIGITAL OUTPUT								
V_{OH}	$I_{OH} = –0.8mA$	3.6	4.5		*	*		V
V_{OL}	$I_{OL} = 1.6mA$		0.3	0.4		*	*	V
POWER SUPPLY								
V_{DD}		+4.75	+5.0	+5.25	*	*	*	V
V_{CC}		+4.75	+5.0	+5.25	*	*	*	V
V_{SS}		–5.25	–5.0	–4.75	*	*	*	V
I_{CC}			0.7	1.1		*	*	mA
I_{DD}			50			*		µA
I_{SS}		–1.2	–0.8		*	*		mA
Power			7.5	11.5		*	*	mW
TEMPERATURE RANGE								
Specified Performance		–40		+85	*		*	°C

* Specifications same as DAC7632VF.

ELECTRICAL CHARACTERISTICS: Single Supply

At $T_A = T_{MIN}$ to T_{MAX}, $V_{DD} = V_{CC} = +5V$, $V_{SS} = 0V$, $V_{REF}H = +2.5V$, and $V_{REF}L = 0V$, unless otherwise noted.

PARAMETER	CONDITIONS	DAC7632VF MIN	DAC7632VF TYP	DAC7632VF MAX	DAC7632VFB MIN	DAC7632VFB TYP	DAC7632VFB MAX	UNITS
ACCURACY								
Linearity Error(1)			±3	±4		±2	±3	LSB
Linearity Match			±4			±2		LSB
Differential Linearity Error			±2	±3		±1	±2	LSB
Monotonicity, T_{MIN} to T_{MAX}		14			15			Bits
Zero Scale Error			±1	±3		*	*	mV
Zero Scale Error Drift			5	10		*	*	ppm/°C
Full-Scale Error			±1	±3		*	*	mV
Full-Scale Error Drift			5	10		*	*	ppm/°C
Zero Scale Matching	Channel-to-Channel Matching		±1	±3		*	*	mV
Full-Scale Matching	Channel-to-Channel Matching		±1	±3		*	*	mV
Power Supply Rejection Ratio (PSRR)	At Full Scale		10	100		*	*	ppm/V
ANALOG OUTPUT								
Voltage Output	$R_L = 10k\Omega$	0		$V_{REF}H$	*		*	V
Output Current		–1.25		+1.25	*		*	mA
Maximum Load Capacitance	No Oscillation		500			*		pF
Short-Circuit Current			–10, +30			*		mA
Short-Circuit Duration	GND or V_{CC}		Indefinite			*		
REFERENCE INPUT								
Ref High Input Voltage Range		$V_{REF}L + 1.25$		+2.5	*		*	V
Ref Low Input Voltage Range		–2.5		$V_{REF}H - 1.25$	*		*	V
Ref High Input Current			250			*		µA
Ref Low Input Current			–250			*		µA
DYNAMIC PERFORMANCE								
Settling Time	To ±0.003%, 5V Output Step		8	10		*	*	µs
Channel-to-Channel Crosstalk			0.5			*		LSB
Digital Feedthrough			2			*		nV-s
Output Noise Voltage, f = 10kHz			60			*		$nV/\sqrt{Hz}$
DAC Glitch	$7FFF_H$ to 8000_H or 8000_H to $7FFF_H$		40			*		nV-s
DIGITAL INPUT								
V_{IH}		$0.7 \cdot V_{DD}$			*			V
V_{IL}				$0.3 \cdot V_{DD}$			*	V
I_{IH}				±10			*	µA
I_{IL}				±10			*	µA
DIGITAL OUTPUT								
V_{OH}	$I_{OH} = –0.8mA$	3.6	4.5		*	*		V
V_{OL}	$I_{OL} = 1.6mA$		0.3	0.4		*	*	V
POWER SUPPLY								
V_{DD}		+4.75	+5.0	+5.25	*	*	*	V
V_{CC}		+4.75	+5.0	+5.25	*	*	*	V
V_{SS}		0	0	0	*	*	*	V
I_{CC}			0.5	0.9		*	*	mA
I_{DD}			50			*		µA
Power			2.5	4.5		*	*	mW
TEMPERATURE RANGE								
Specified Performance		–40		+85	*		*	°C

* Specifications same as DAC7632VF.

NOTE: (1) If $V_{SS} = 0V$, the specification applies to Code 0040_H and above due to possible negative zero-scale error.

PIN CONFIGURATION

Top View **SSOP**

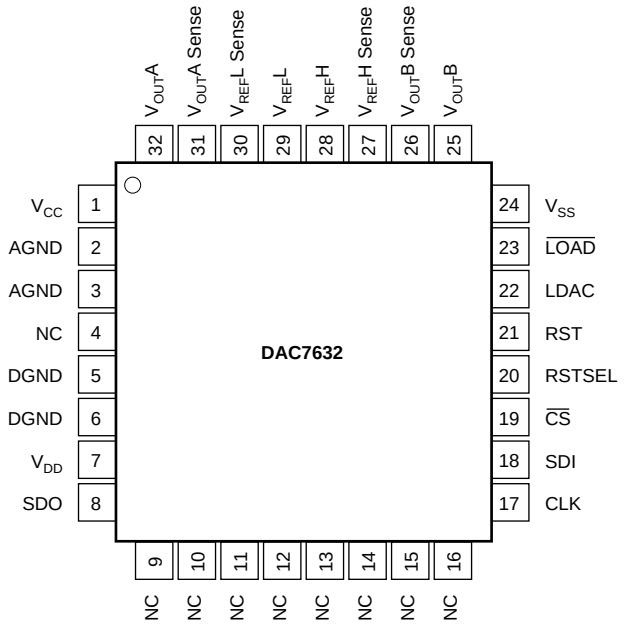

NC = No Connection

PIN DESCRIPTIONS

PIN	NAME	DESCRIPTION	PIN	NAME	DESCRIPTION
1	V_{CC}	Analog +5V Power Supply	22	LDAC	DAC Register Load Control, Rising Edge Triggered
2, 3	AGND	Analog Ground			
4	NC	No Connection	23	$\overline{LOAD}$	DAC Input Register Load Control, Active LOW
5, 6	DGND	Digital Ground	24	V_{SS}	Analog –5V Power Supply (or 0V for Single Supply)
7	V_{DD}	Digital +5V Power Supply	25	$V_{OUT}B$	DAC B Output Voltage
8	SDO	Serial Data Output	26	$V_{OUT}B$ Sense	DAC B Output Amplifier Inverting Input. Used to close the feedback loop at the load.
9-16	NC	No Connection			
17	CLK	Data Clock Input	27	$V_{REF}H$ Sense	DAC A and B Reference High Sense Input
18	SDI	Serial Data Input	28	$V_{REF}H$	DAC A and B Reference High Input
19	$\overline{CS}$	Chip Select, Active LOW	29	$V_{REF}L$	DAC A and B Reference Low Input
20	RSTSEL	Reset Select. Determines the action of RST. If HIGH, a RST common will set the DAC registers to mid-scale code (8000_H). If LOW, a RST command will set the DAC registers to zero-scale code (0000_H).	30	$V_{REF}L$ Sense	DAC A and B Reference Low Sense Input
			31	$V_{REF}A$ Sense	DAC A Output Amplifier Inverting Input. Used to close the feedback loop at the load.
21	RST	Reset, Rising Edge Triggered. Depending on the state of RSTSEL, the DAC registers are set to either mid-scale code or zero-scale code.	32	$V_{OUT}A$	DAC A Output Voltage

TYPICAL CHARACTERISTICS: V_{SS} = 0V

At T_A = +25°C, V_{DD} = V_{CC} = +5V, V_{SS} = 0V, V_{REF}H = +2.5V, V_{REF}L = 0V, representative unit, unless otherwise specified.

+25°C

LINEARITY ERROR AND
DIFFERENTIAL LINEARITY ERROR vs CODE
(DAC A, +25°C)

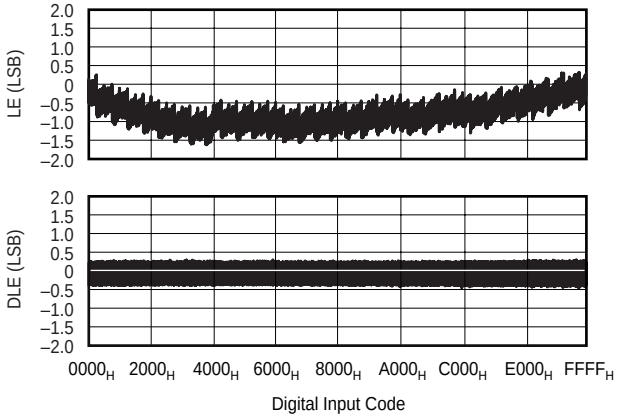

LINEARITY ERROR AND
DIFFERENTIAL LINEARITY ERROR vs CODE
(DAC B, +25°C)

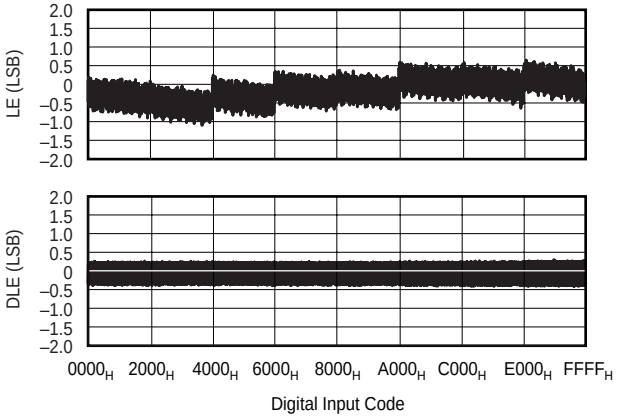

+85°C

LINEARITY ERROR AND
DIFFERENTIAL LINEARITY ERROR vs CODE
(DAC A, +85°C)

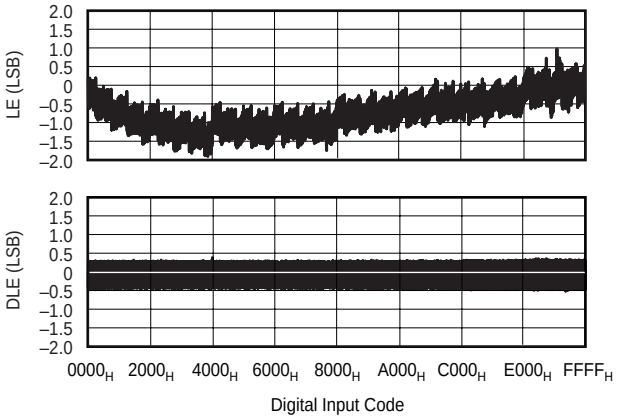

LINEARITY ERROR AND
DIFFERENTIAL LINEARITY ERROR vs CODE
(DAC B, +85°C)

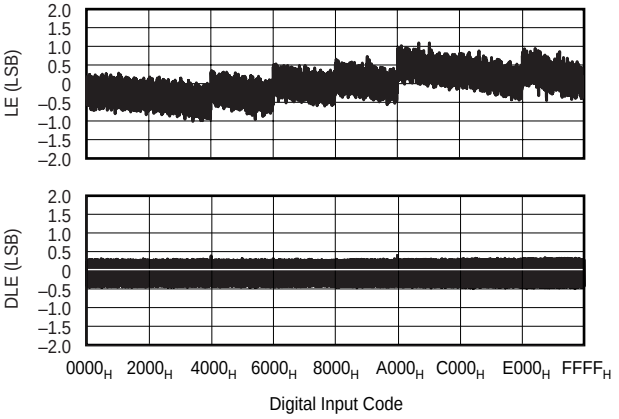

–40°C

LINEARITY ERROR AND
DIFFERENTIAL LINEARITY ERROR vs CODE
(DAC A, –40°C)

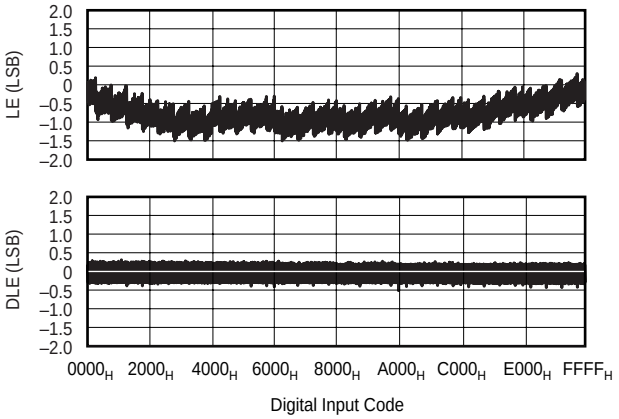

LINEARITY ERROR AND
DIFFERENTIAL LINEARITY ERROR vs CODE
(DAC B, –40°C)

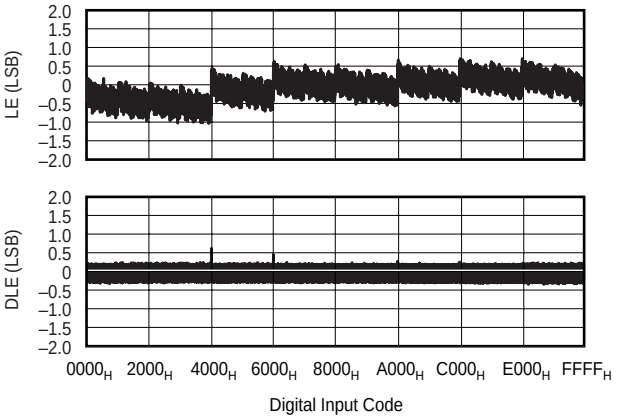

TYPICAL CHARACTERISTICS: V_{SS} = 0V (Cont.)

At T_A = +25°C, V_{DD} = V_{CC} = +5V, V_{SS} = 0V, V_{REF}H = +2.5V, V_{REF}L = 0V, representative unit, unless otherwise specified.

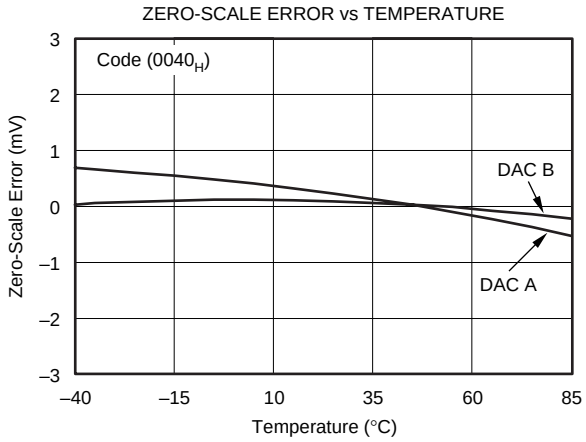

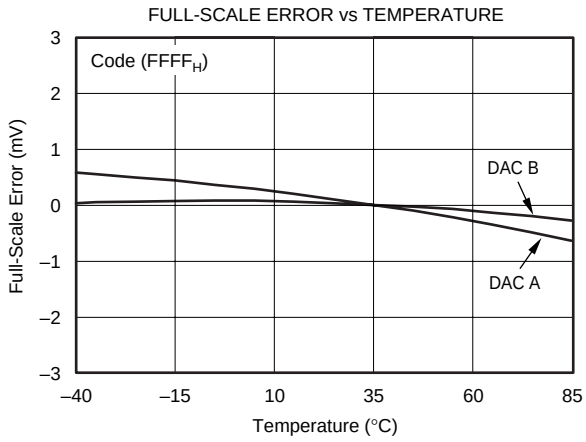

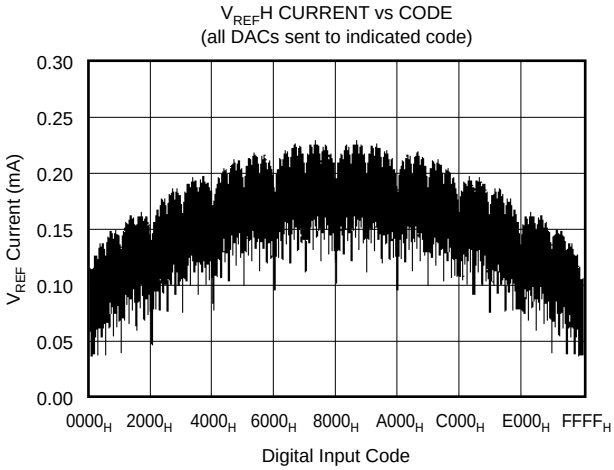

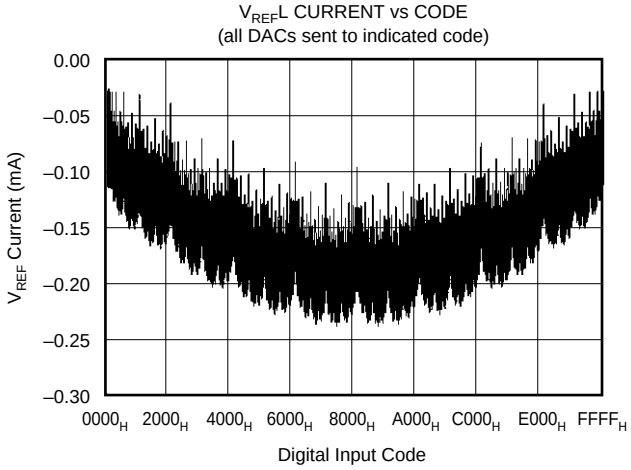

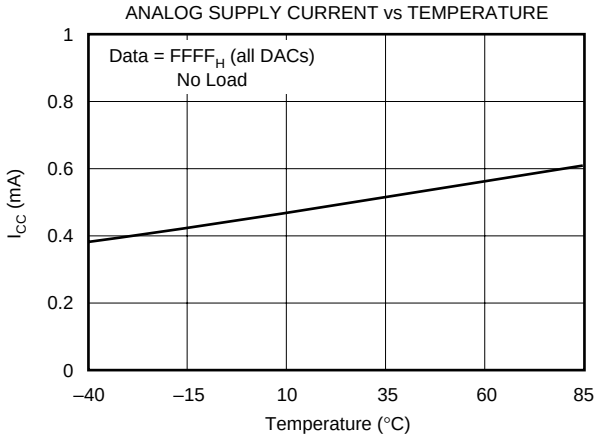

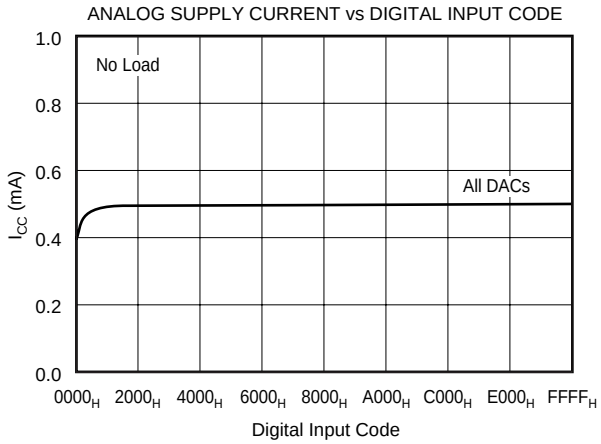

TYPICAL CHARACTERISTICS: V_{SS} = 0V (Cont.)

At T_A = +25°C, V_{DD} = V_{CC} = +5V, V_{SS} = 0V, V_{REF}H = +2.5V, V_{REF}L = 0V, representative unit, unless otherwise specified.

OUTPUT VOLTAGE vs SETTLING TIME
(0V to +2.5V)

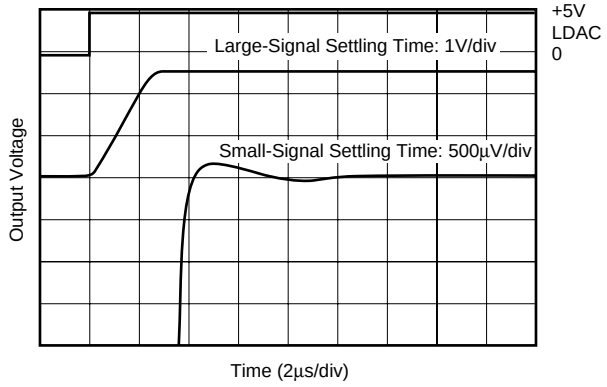

OUTPUT VOLTAGE vs SETTLING TIME
(+2.5V to 2mV)

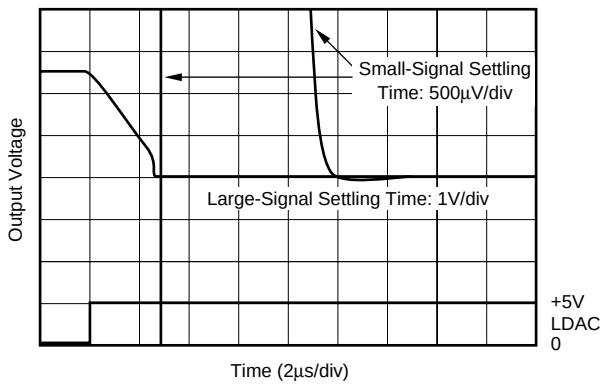

OUTPUT VOLTAGE
vs MID-SCALE GLITCH PERFORMANCE

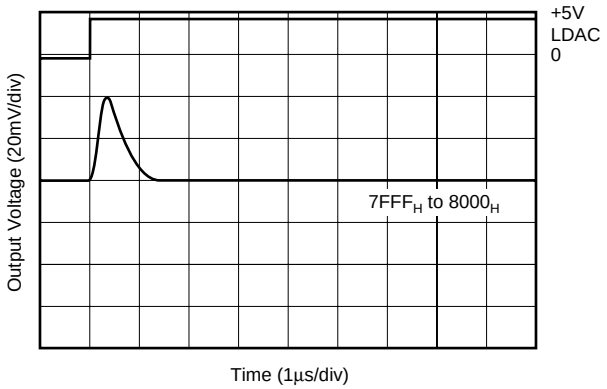

OUTPUT VOLTAGE
vs MID-SCALE GLITCH PERFORMANCE

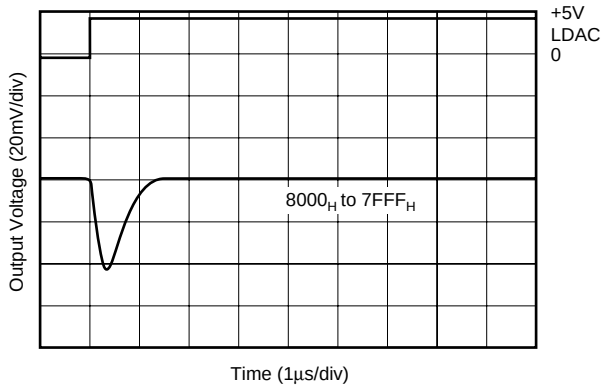

BROADBAND NOISE

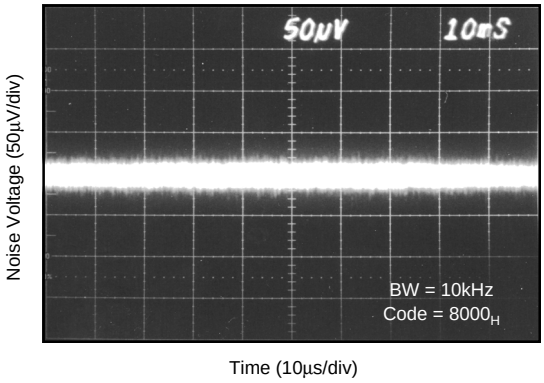

OUTPUT NOISE VOLTAGE vs FREQUENCY

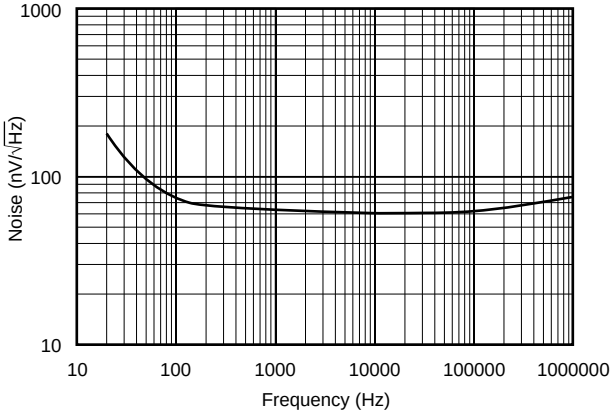

TYPICAL CHARACTERISTICS: V_{SS} = 0V (Cont.)

At T_A = +25°C, V_{DD} = V_{CC} = +5V, V_{SS} = 0V, V_{REF}H = +2.5V, V_{REF}L = 0V, representative unit, unless otherwise specified.

LOGIC SUPPLY CURRENT
vs LOGIC INPUT LEVEL FOR DIGITAL INPUTS

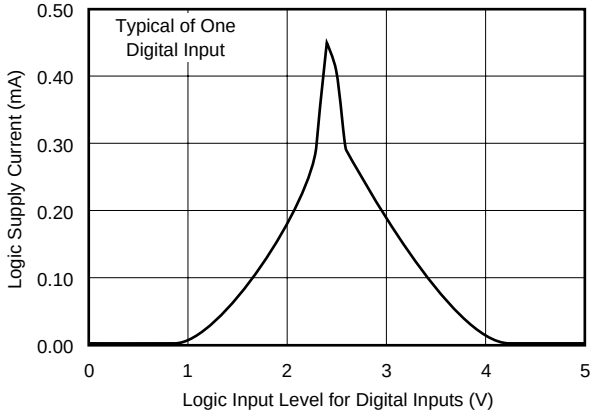

V_{OUT} vs R_{LOAD}

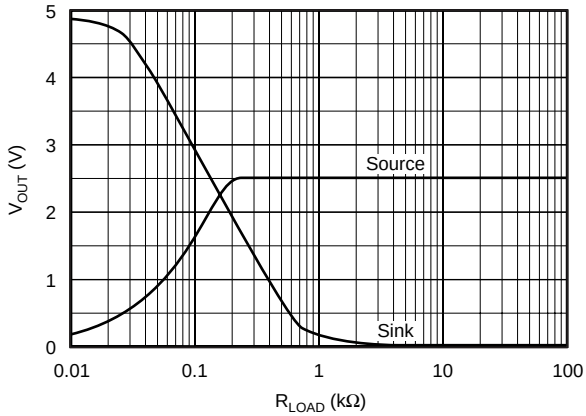

V_{SS} = –5V

At T_A = +25°C, V_{DD} = V_{CC} = +5V, V_{SS} = –5V, V_{REF}H = +2.5V, V_{REF}L = –2.5V, representative unit, unless otherwise specified.

+25°C

LINEARITY ERROR AND
DIFFERENTIAL LINEARITY ERROR vs CODE
(DAC A, +25°C)

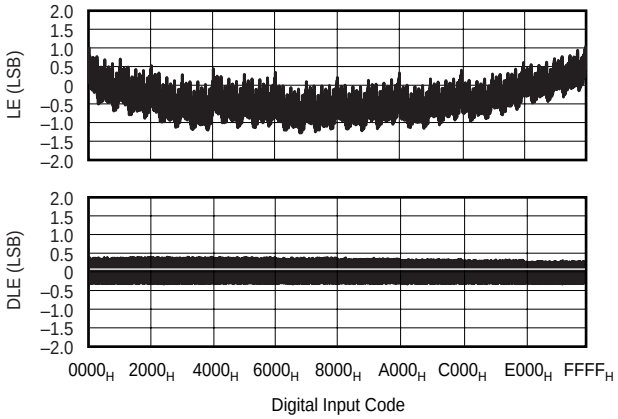

LINEARITY ERROR AND
DIFFERENTIAL LINEARITY ERROR vs CODE
(DAC B, +25°C)

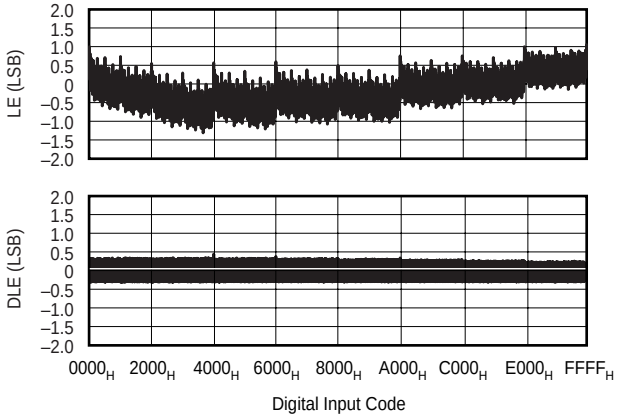

+85°C

LINEARITY ERROR AND
DIFFERENTIAL LINEARITY ERROR vs CODE
(DAC A, +85°C)

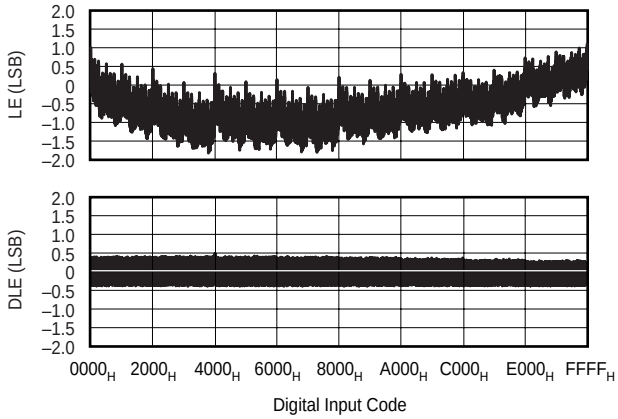

LINEARITY ERROR AND
DIFFERENTIAL LINEARITY ERROR vs CODE
(DAC B, +85°C)

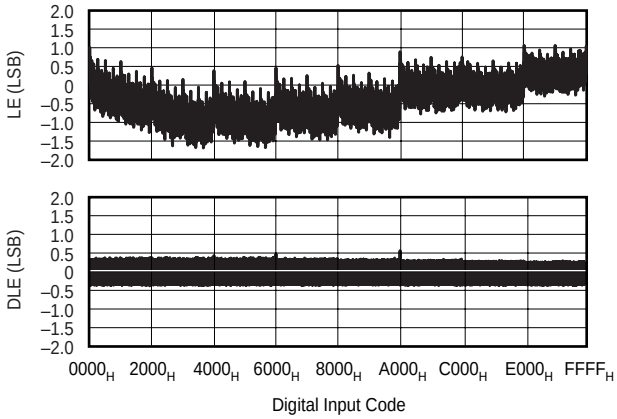

TYPICAL CHARACTERISTICS: V_{SS} = –5V (Cont.)

At T_A = +25°C, V_{DD} = V_{CC} = +5V, V_{SS} = –5V, V_{REF}H = +2.5V, V_{REF}L = –2.5V, representative unit, unless otherwise specified.

–40°C

LINEARITY ERROR AND
DIFFERENTIAL LINEARITY ERROR vs CODE
(DAC A, –40°C)

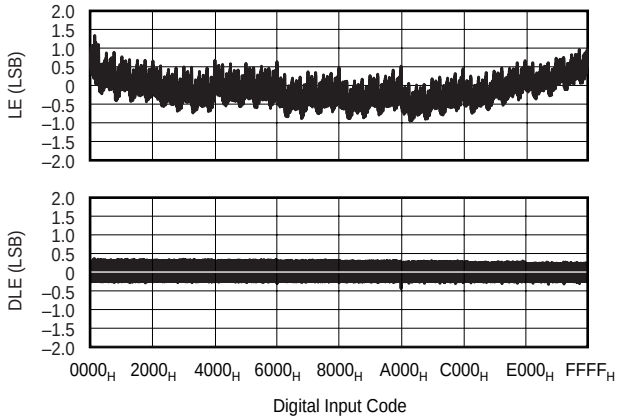

LINEARITY ERROR AND
DIFFERENTIAL LINEARITY ERROR vs CODE
(DAC B, –40°C)

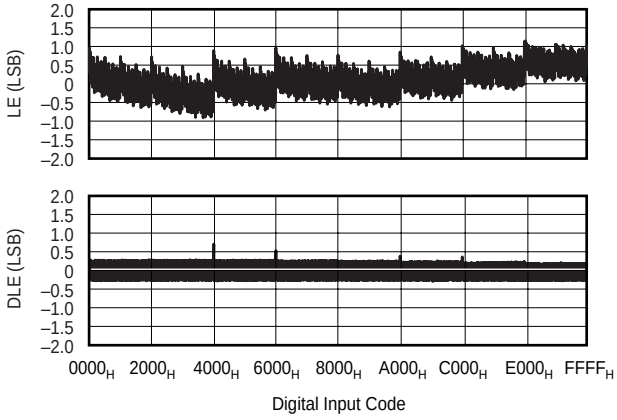

V_{REF}H CURRENT vs CODE
(all DACs sent to indicated code)

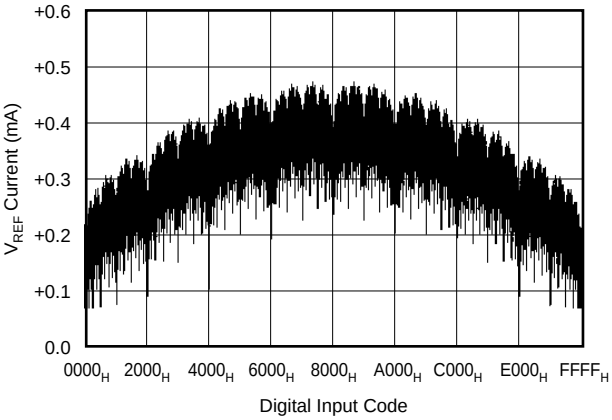

V_{REF}L CURRENT vs CODE
(all DACs sent to indicated code)

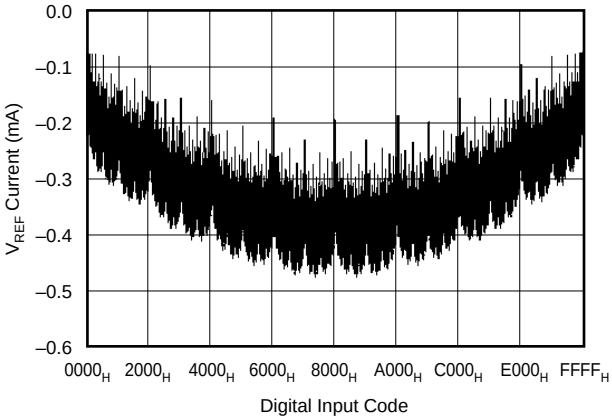

BIPOLAR ZERO ERROR vs TEMPERATURE

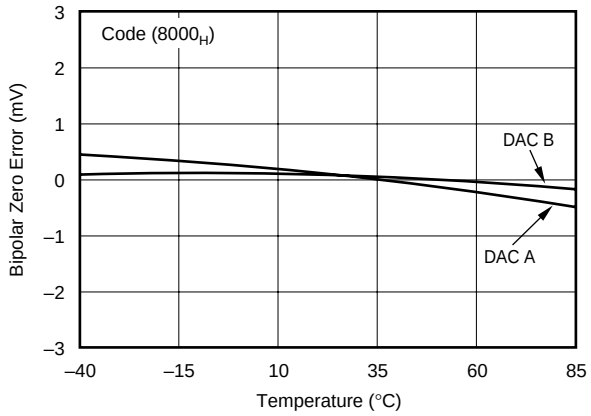

POSITIVE FULL-SCALE ERROR vs TEMPERATURE

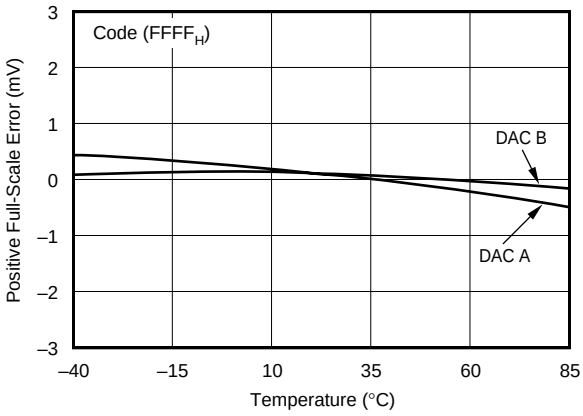

TYPICAL CHARACTERISTICS: V_{SS} = –5V (Cont.)

At T_A = +25°C, V_{DD} = V_{CC} = +5V, V_{SS} = –5V, V_{REF}H = +2.5V, V_{REF}L = –2.5V, representative unit, unless otherwise specified.

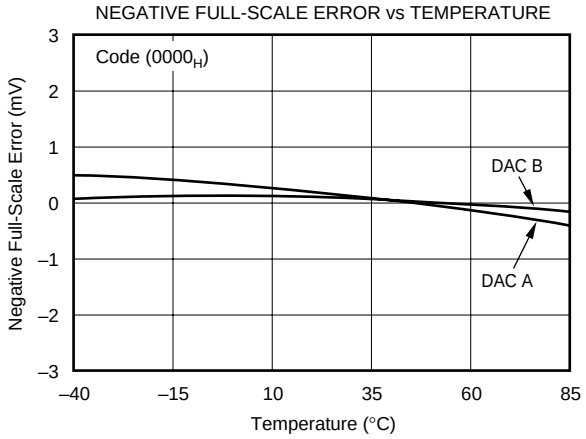

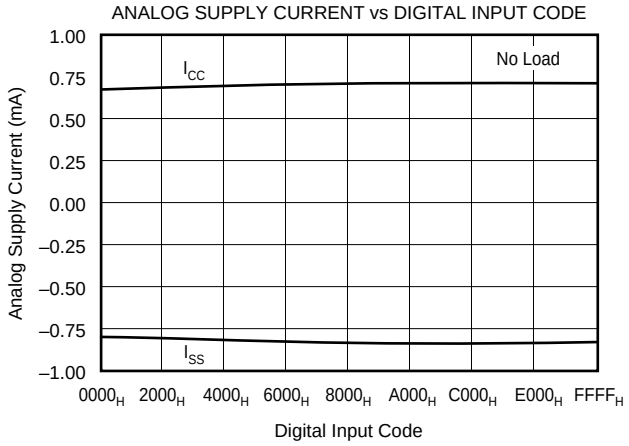

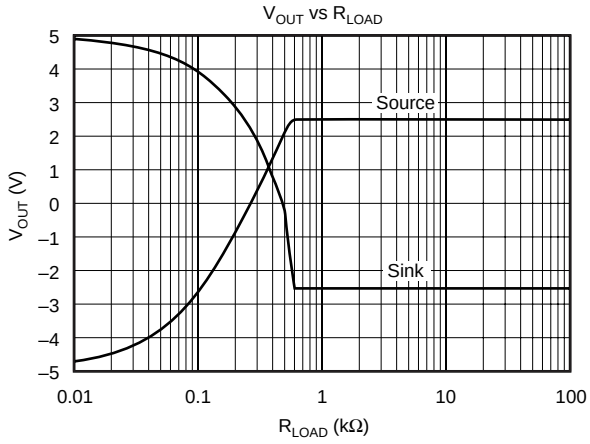

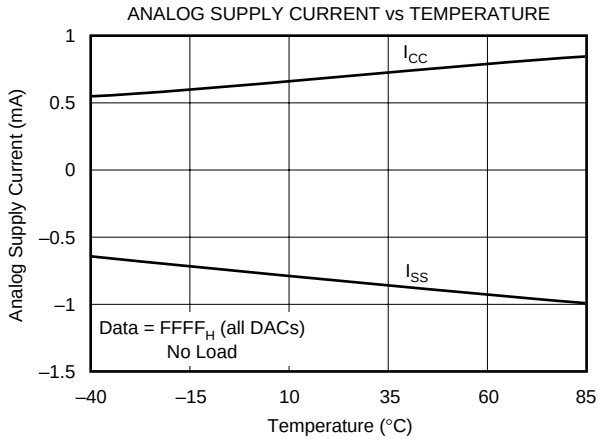

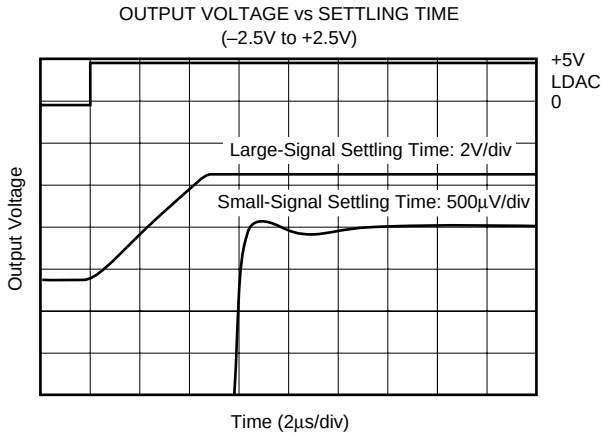

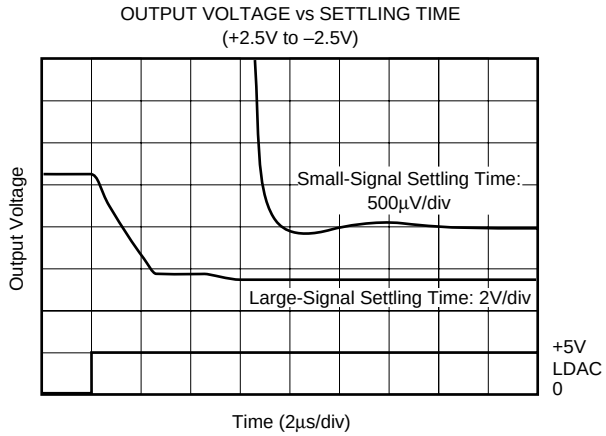

TYPICAL CHARACTERISTICS: V_{SS} = –5V (Cont.)

At T_A = +25°C, V_{DD} = V_{CC} = +5V, V_{SS} = –5V, V_{REF}H = +2.5V, V_{REF}L = –2.5V, representative unit, unless otherwise specified.

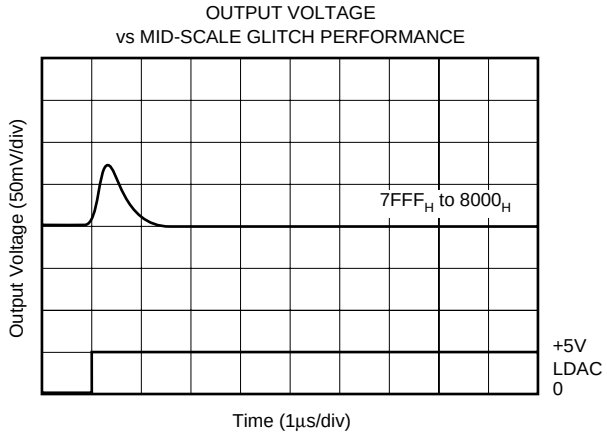

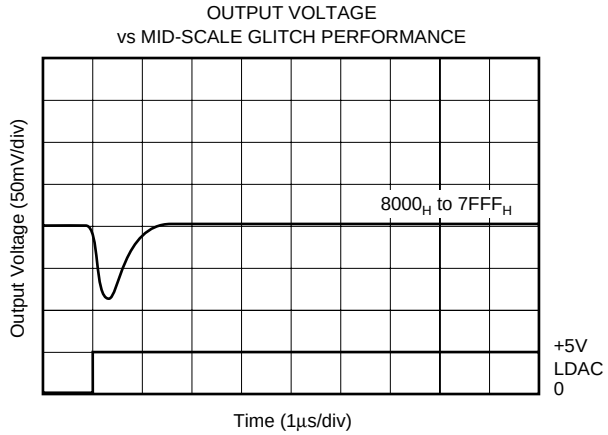

THEORY OF OPERATION

The DAC7632 is a dual channel, voltage output, 16-bit DAC. The architecture is an R-2R ladder configuration with the three MSB's segmented, followed by an operational amplifier that serves as a buffer. Each DAC has its own R-2R ladder network, segmented MSBs, and output op amp, as shown in Figure 1. The minimum voltage output (zero-scale) and maximum voltage output (full-scale) are set by the external voltage references V_{REF}L and V_{REF}H, respectively.

The digital input is a 24-bit serial word that contains an address bit for selecting one of two DACs, a quick load bit, six unused bits, and the 16-bit DAC code (MSB first). The converters can be powered from either a single +5V supply or a dual ±5V supply. The device offers a reset function which immediately sets all DAC output voltages, DAC registers and input registers to mid-scale (code 8000$_H$) or to zero-scale (code 0000$_H$), depending on the state of RSTSEL. See Figures 2 and 3 for the basic configurations of the DAC7632.

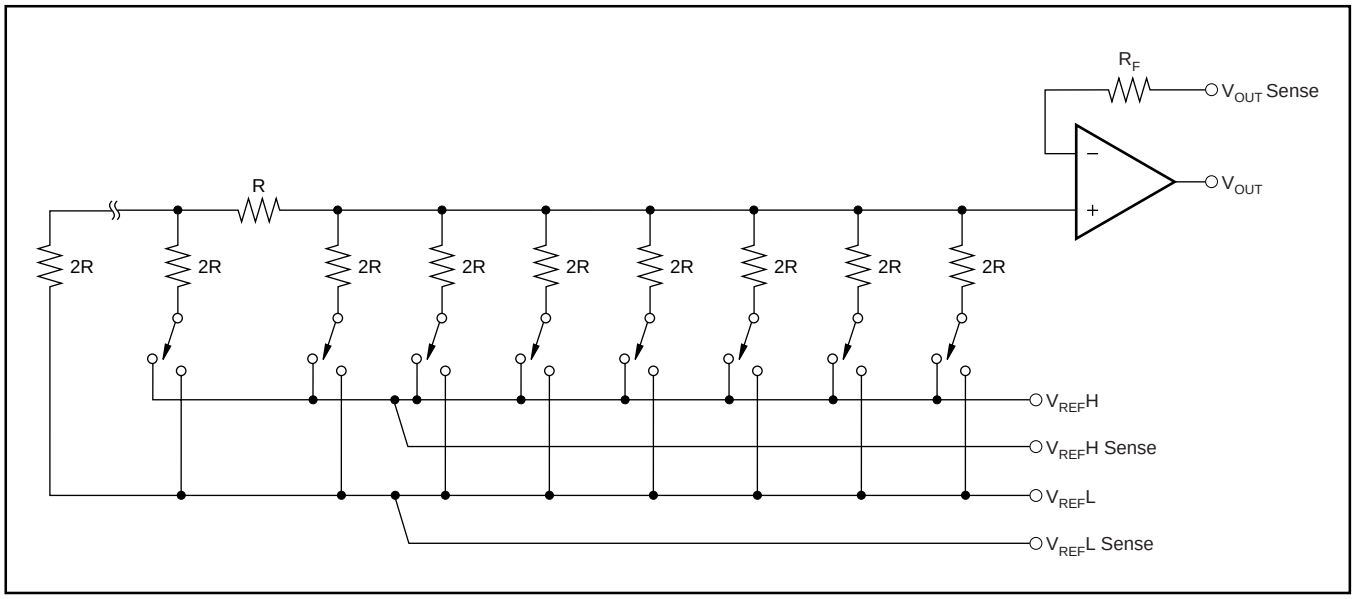

FIGURE 1. DAC7632 Architecture.

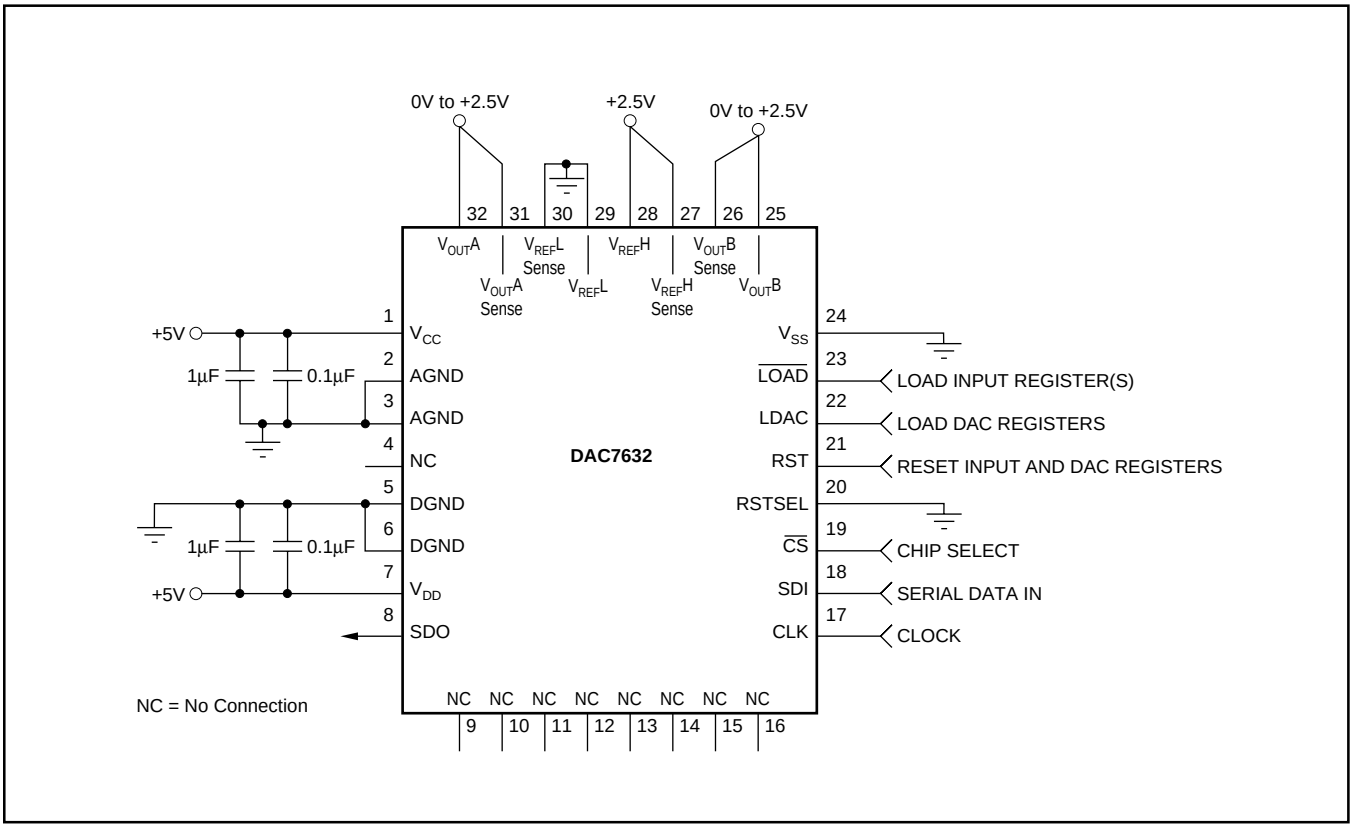

FIGURE 2. Basic Single-Supply Operation of the DAC7632.

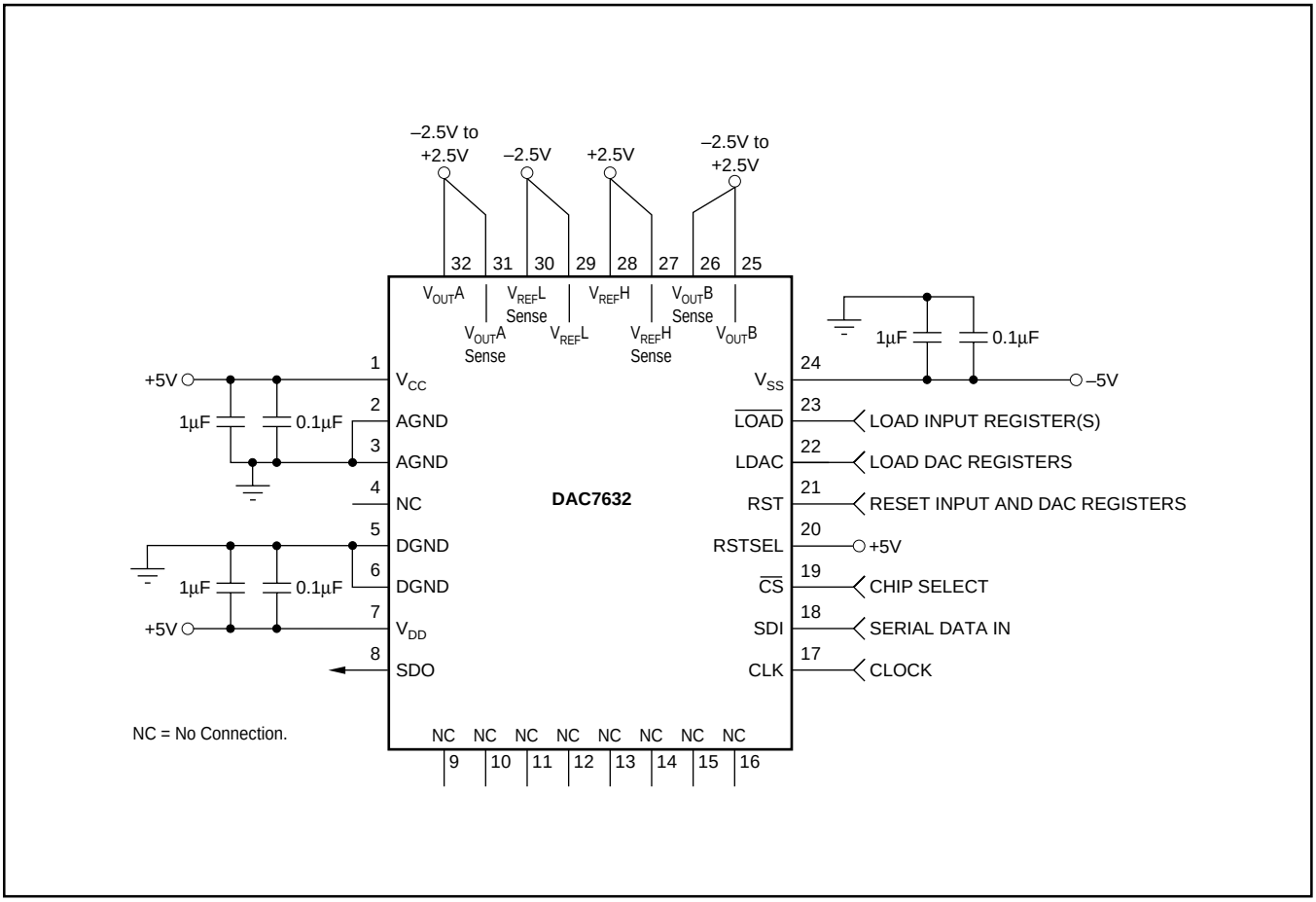

FIGURE 3. Basic Dual-Supply Operation of the DAC7632.

ANALOG OUTPUTS

When V_{SS} = –5V (dual-supply operation), the output amplifier can swing to within 2.25V of the supply rails over the –40°C to +85°C temperature range. When V_{SS} = 0V (single-supply operation), and with R_{LOAD} also connected to ground, the output can swing to ground. Care must also be taken when measuring the zero-scale error when V_{SS} = 0V. Since the output cannot swing below ground, the output voltage may not change for the first few digital input codes (0000_H, 0001_H, 0002_H, etc.) if the output amplifier has a negative offset. At the negative limit of –2mV, the first specified output starts at code 0040_H.

Due to the high accuracy of these DACs, system design problems such as grounding and contact resistance become very important. A 16-bit converter with a 2.5V full-scale range has a 1LSB value of 38µV. With a load current of 1mA, series wiring and connector resistance of only 40mΩ (R_{W2}) will cause a voltage drop of 40µV, as shown in Figure 4. To understand what this means in terms of a system layout, the resistivity of a typical 1 ounce copper-clad printed circuit board is 1/2mΩ per square. For a 1mA load, a 10 milli-inch wide printed circuit conductor 600 milli-inches long will result in a voltage drop of 30µV.

The DAC7632 offers a force and sense output configuration for the high open-loop gain output amplifier. This feature allows the loop around the output amplifier to be closed at the load, as shown in Figure 4, thus ensuring an accurate output voltage.

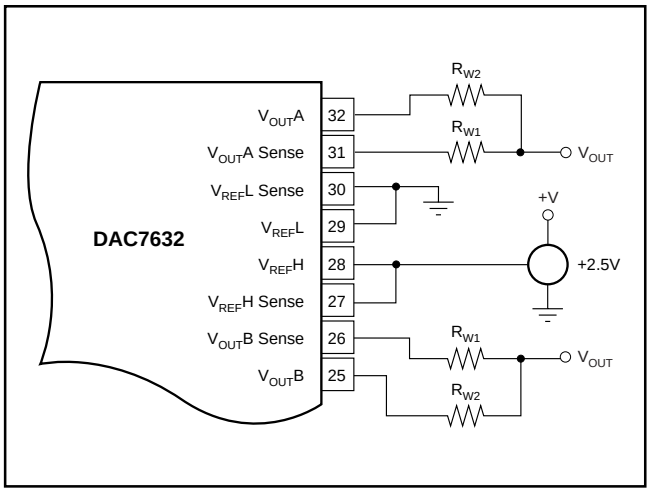

FIGURE 4. Analog Output Closed-Loop Configuration R_W represents wiring resistances.

REFERENCE INPUTS

The reference inputs, $V_{REF}L$ and $V_{REF}H$, can be any voltage between V_{SS} + 2.5V and V_{CC} – 2.5V, provided that $V_{REF}H$ is at least 1.25V greater than $V_{REF}L$. The minimum output of each DAC is equal to $V_{REF}L$ plus a small offset voltage (essentially, the offset of the output op amp). The maximum output is equal to $V_{REF}H$ plus a similar offset voltage. Note that V_{SS} (the negative power supply) must either be connected to ground or must be in the range of –4.75V to –5.25V. The voltage on V_{SS} sets several bias points within the converter. If V_{SS} is not in one of these two configurations, the bias values may be in error and proper operation of the device may be affected.

The current into the $V_{REF}H$ input and out of $V_{REF}L$ depends on the DAC output voltages, and can vary from a few microamps to approximately 0.5mA. The reference input appears as a varying load to the reference supply. If the reference applied can sink or source the required current, a reference buffer is not required. The DAC7632 features reference drive and sense connections such that the internal errors caused by the changing reference current and the circuit impedances can be minimized. Figures 5 through 13 show different reference configurations and the effect on the integral linearity and differential linearity, for each case.

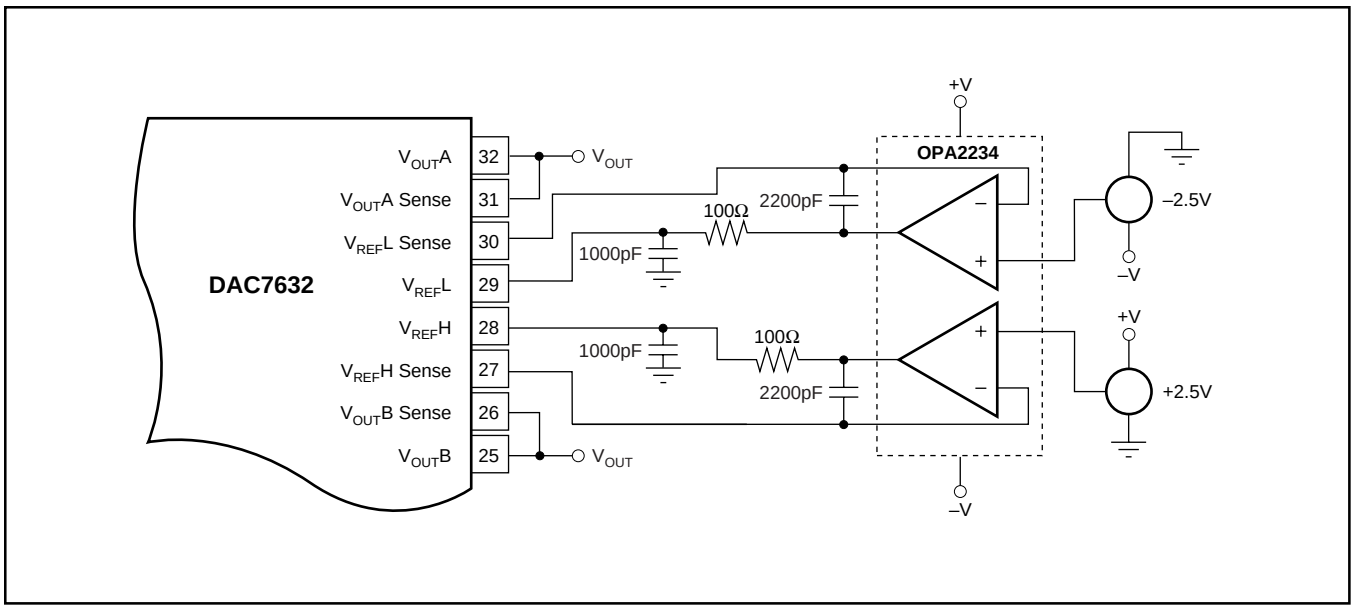

FIGURE 5. Dual Supply Configuration-Buffered References, used for Dual-Supply Performance.

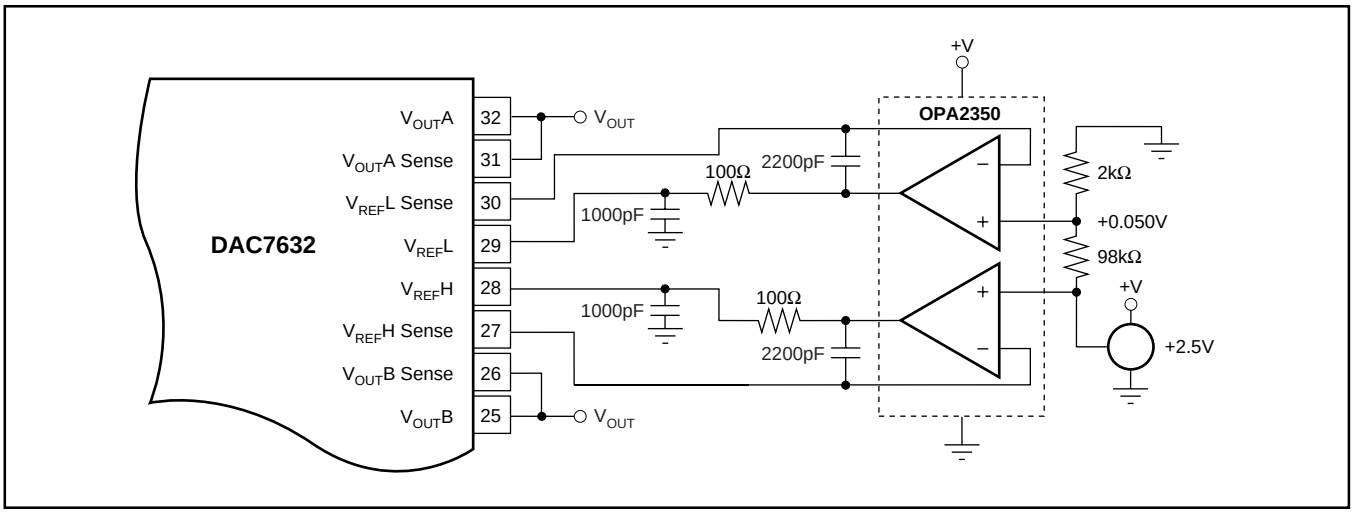

FIGURE 6. Single-Supply Buffered Reference with a Reference Low of 50mV.

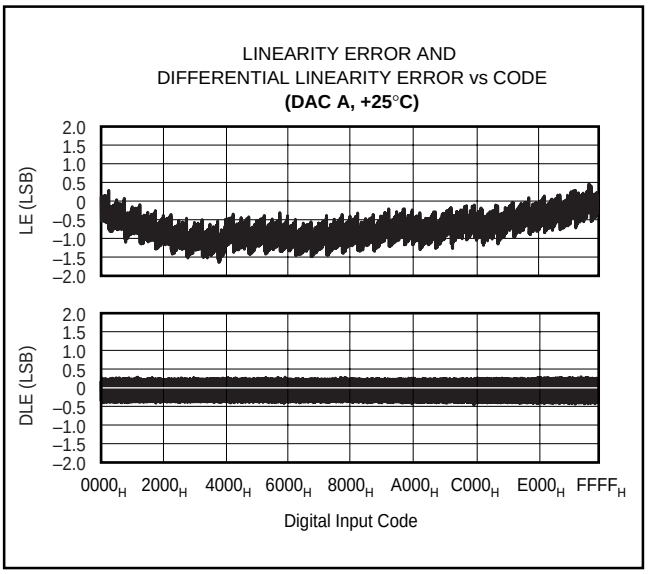

FIGURE 7. Integral Linearity and Differential Linearity Error Characteristic Curves for Figure 6.

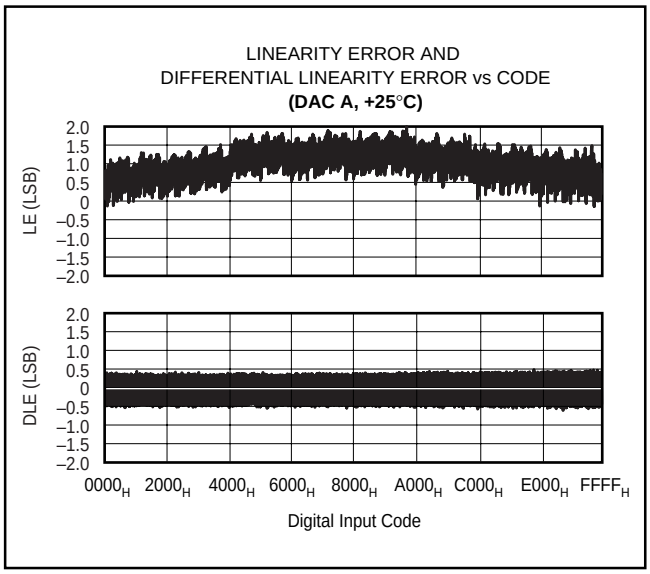

FIGURE 8. Integral Linearity and Differential Linearity Error Characteristic Curves for Figure 9.

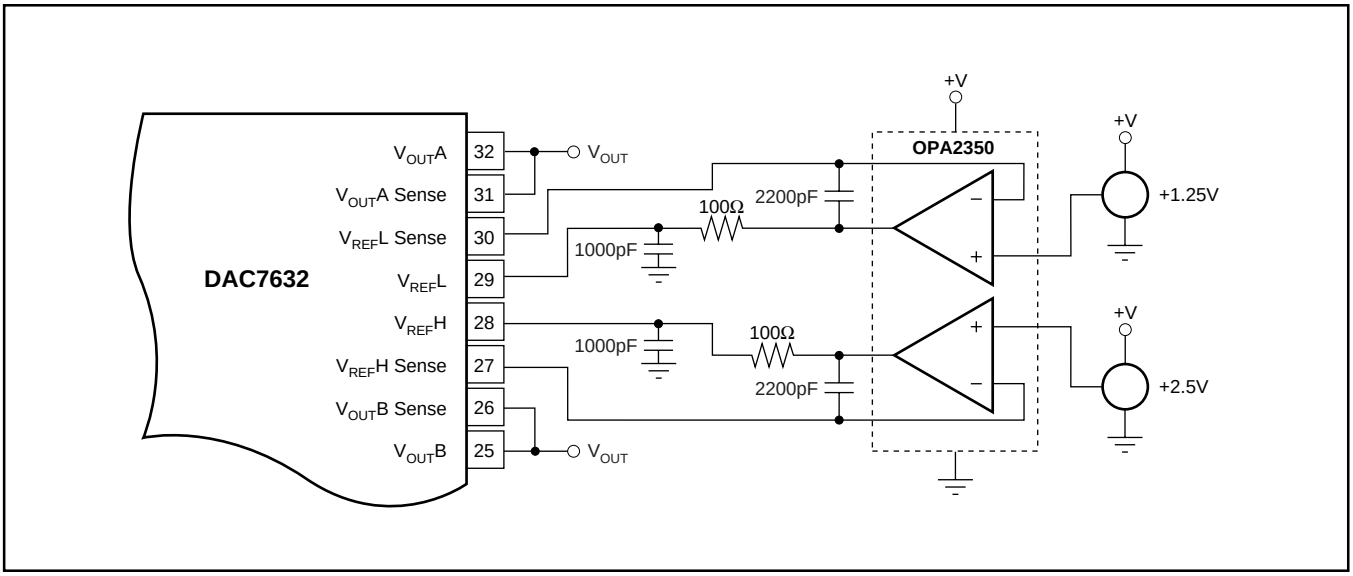

FIGURE 9. Single-Supply Buffered Reference with $V_{REF}L$ = +1.25V and $V_{REF}H$ = +2.5V.

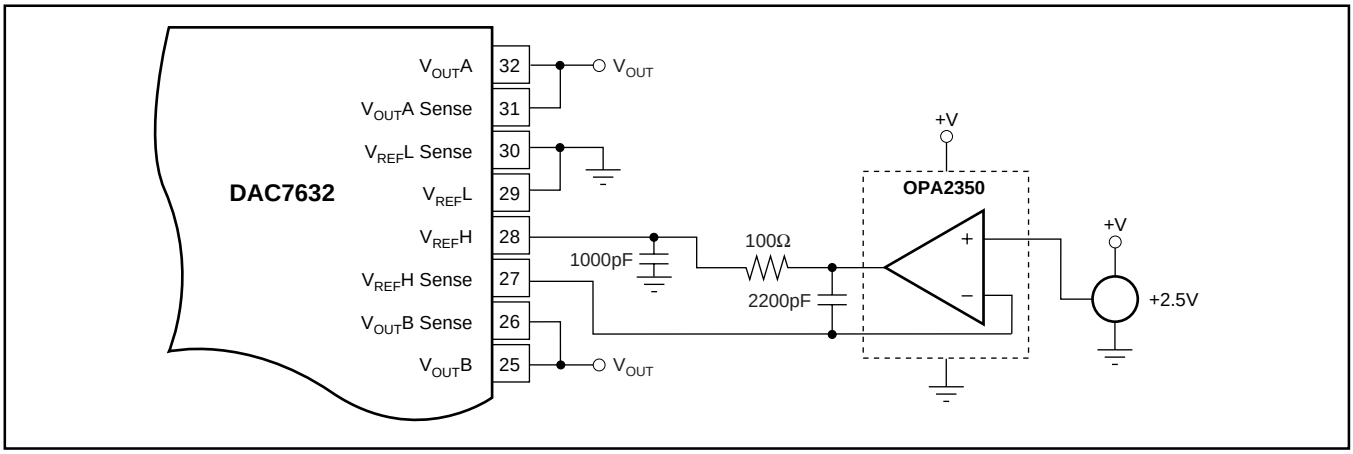

FIGURE 10. Single-Supply Buffered $V_{REF}H$.

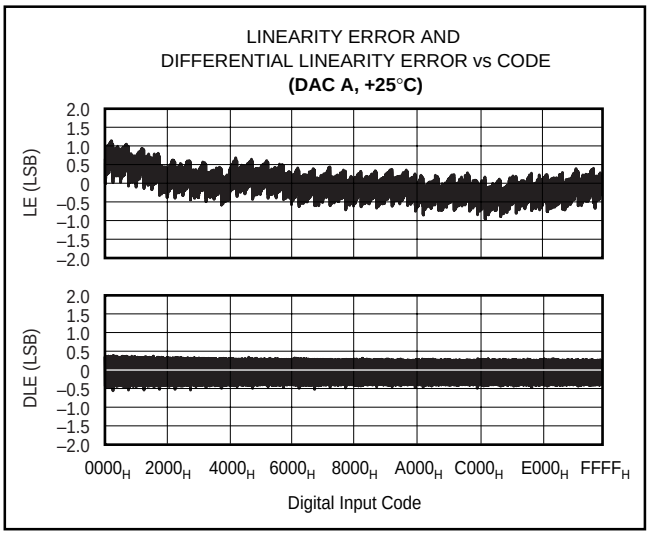

FIGURE 11. Linearity and Differential Linearity Error Characteristic Curves for Figure 10.

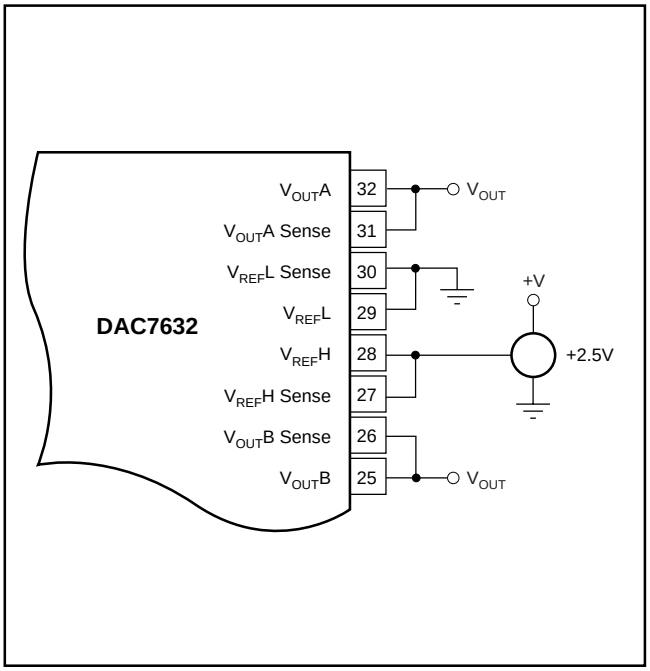

FIGURE 12. Low-Cost Single-Supply Configuration.

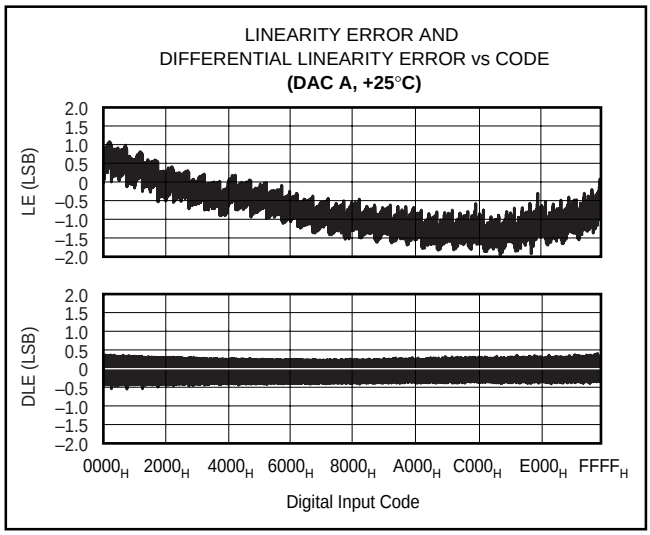

FIGURE 13. Linearity and Differential Linearity Error Characteristic Curves for Figure 12.

DIGITAL INTERFACE

See Table I for the basic control logic for the DAC7632. The interface consists of a Serial Data Clock (CLK) input, Serial Data Input (SDI), Input Register Load Control Signal ($\overline{LOAD}$), and DAC Register Load Control Signal (LDAC). In addition, a Chip Select ($\overline{CS}$) input is available to enable serial communication when there are multiple serial devices attached to a single serial bus. An asynchronous Reset (RST) input (rising edge triggered) is provided to simplify start-up conditions, periodic resets, or emergency resets to a known state, depending on the status of the Reset Select (RSTSEL) signal.

The DAC code, quick load control, and address are provided via a 24-bit serial interface (see Figure 15). The first bit (DACSEL) selects the input register that will be updated when $\overline{LOAD}$ goes LOW. The third bit is a “Quick Load” bit such that if HIGH, the code in the shift register is loaded into both input registers when the $\overline{LOAD}$ signal goes LOW. If the “Quick Load” bit is LOW when an active $\overline{LOAD}$ signal is issued, the content of the shift register is loaded only to the input register that is addressed by DACSEL. The “Quick Load” bit is followed by five unused bits. The last 16 bits (MSB first) make up the DAC code.

SERIAL DATA INPUT

B23	B22	B21	B20	B19	B18	B17	B16	B15	B14	B13	B12	B11	B10	B9	B8	B7	B6	B5	B4	B3	B2	B1	B0
DACSEL	X	QUICK LOAD	X	X	X	X	X	D15	D14	D13	D12	D11	D10	D9	D8	D7	D6	D5	D4	D3	D2	D1	D0

DACSEL	$\overline{CS}$	RST	RSTSEL	LDAC	$\overline{LOAD}$	INPUT REGISTER	DAC REGISTER	MODE	DAC
0	L	H	X	X	L	Write	Hold	Write Input	A
1	L	H	X	X	L	Write	Hold	Write Input	B
X	H	H	X	↑	H	Hold	Write	Update	All
X	H	H	X	H	H	Hold	Hold	Hold	All
X	X	↑	L	X	X	Reset to 0000_H	Reset to 0000_H	Reset to Zero-Scale	All
X	X	↑	H	X	X	Reset to 8000_H	Reset to 8000_H	Reset to Mid-scale	All

TABLE I. DAC7632 Logic Truth Table.

Data presented to SDI is clocked into the shift register on each rising CLK edge. This data is latched into the input register(s) via a logic-low level on $\overline{LOAD}$. The data is directed from the shift register to the desired input register(s) specified by data bits 21 and 23. The internal DAC registers are edge triggered and not level triggered. When the LDAC signal is transitioned from LOW to HIGH, the digital word currently in the input registers are latched. This double-buffered architecture has been designed so that new data can be entered for each DAC without disturbing the analog outputs. When the new data has been entered into the device, both DAC outputs can be updated simultaneously by the rising edge of LDAC. Additionally, it allows the input registers to be written to at any point, then the DAC output voltages can be synchronously changed via a trigger signal (LDAC).

Note that $\overline{CS}$ and CLK are combined with an OR gate, which controls the serial-to-parallel shift register. These two inputs are completely interchangeable. In addition, care must be taken with the state of CLK when $\overline{CS}$ rises at the end of a serial transfer. If CLK is LOW when $\overline{CS}$ rises, the OR gate will provide a rising edge to the shift register, shifting the internal data one additional bit. The result will be incorrect data and possible selection of the wrong input register(s). If both $\overline{CS}$ and CLK are used, $\overline{CS}$ should rise only when CLK is HIGH. If not, then either $\overline{CS}$ or CLK can be used to operate the shift register (the remaining pin should be tied to DGND). Please refer to Table II for more information.

$\overline{CS}$(1)	CLK(1)	$\overline{LOAD}$	RST	SERIAL SHIFT REGISTER
H(2)	X(3)	H	H	No Change
L(4)	L	H	H	No Change
L	↑(5)	H	H	Advanced One Bit
↑	L	H	H	Advanced One Bit
H(6)	X	L(7)	H	No Change
H(6)	X	H	↑(8)	No Change

NOTES: (1) $\overline{CS}$ and CLK are interchangeable. (2) H = Logic HIGH. (3) X = Don't Care. (4) L = Logic LOW. (5) = Positive Logic Transition. (6) A HIGH value is suggested in order to avoid a "false clock" from advancing the shift register and changing the shift register. (7) If data is clocked into the serial register while $\overline{LOAD}$ is LOW, the input registers will change as data flows through the shift register. This will corrupt the data in each DAC register that has been erroneously selected. (8) Rising edge of RST causes no change in the contents of the serial shift register.

TABLE II. Serial Shift Register Truth Table.

SERIAL-DATA OUTPUT

The Serial-Data Output pin (SDO) is the internal shift register's output. For the DAC7632, SDO is a driven output and does not require an external pull-up. Any number of DAC7632s can be daisy-chained by connecting the SDO pin of one device to the SDI pin of the following device in the chain, as shown in Figure 14.

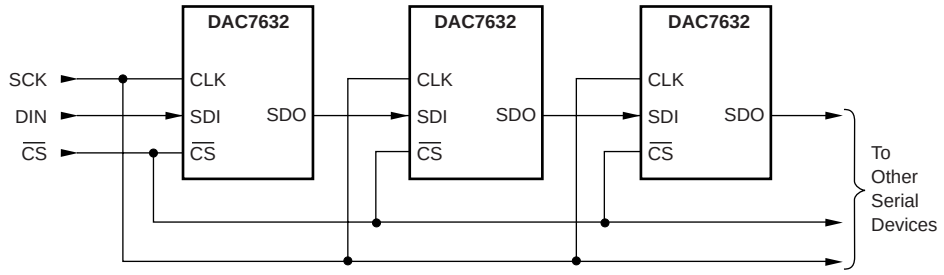

FIGURE 14. Daisy-Chaining Multiple DAC7632s.

DIGITAL TIMING

Figure 15 and Table III provide detailed timing for the digital interface of the DAC7632.

DIGITAL INPUT CODING

The DAC7632 input data is in Straight Binary format. The output voltage is given by Equation 1.

$$V_{OUT} = V_{REF}L + \frac{(V_{REF}H - V_{REF}L) \bullet N}{65,536}$$

where N is the digital input code. This equation does not include the effects of offset (zero-scale) or gain (full-scale) errors.

DIGITALLY-PROGRAMMABLE CURRENT SOURCE

The DAC7632 offers a unique set of features that allows a wide range of flexibility in designing application circuits such as programmable current sources. The DAC7632 offers both a differential reference input, as well as an open-loop configuration around the output amplifier. The open-loop configuration around the output amplifier allows a transistor to be placed within the loop to implement a digitally-programmable, unidirectional current source. The availability of a differential reference allows programmability for both the full-scale and zero-scale currents. The output current is calculated as:

$$I_{OUT} = \left(\left(\frac{V_{REF}H - V_{REF}L}{R_{SENSE}}\right) \bullet \left(\frac{N}{65,536}\right)\right) + \left(V_{REF}L / R_{SENSE}\right)$$

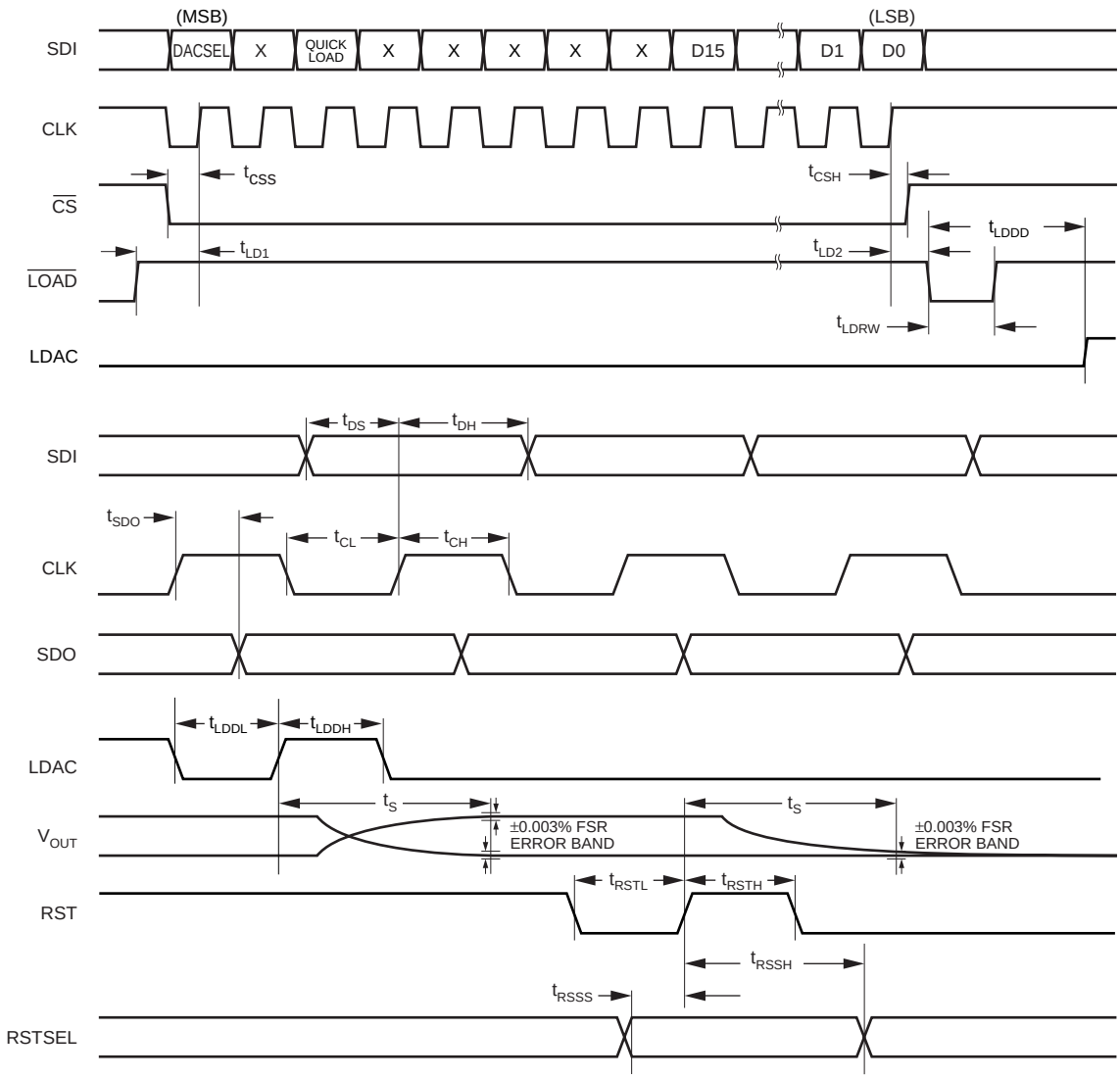

FIGURE 15. Digital Input and Output Timing.

SYMBOL	DESCRIPTION	MIN	MAX	UNITS
t_{DS}	Data Valid to CLK Rising	10		ns
t_{DH}	Data Held Valid after CLK Rises	20		ns
t_{CH}	CLK HIGH	25		ns
t_{CL}	CLK LOW	25		ns
t_{CSS}	$\overline{CS}$ LOW to CLK Rising	15		ns
t_{CSH}	CLK HIGH to $\overline{CS}$ Rising	0		ns
t_{LD1}	$\overline{LOAD}$ HIGH to CLK Rising	10		ns
t_{LD2}	CLK Rising to $\overline{LOAD}$ LOW	30		ns
t_{LDRW}	$\overline{LOAD}$ LOW Time	30		ns
t_{LDDL}	LDAC LOW Time	100		ns
t_{LDDH}	LDAC HIGH Time	100		ns
t_{LDDD}	$\overline{LOAD}$ LOW to LDAC Rising	40		ns
t_{RSSS}	RESETSEL Valid to RESET HIGH	0		ns
t_{RSSH}	RESET HIGH to RESETSEL Not Valid	100		ns
t_{RSTL}	RESET LOW Time	10		ns
t_{RSTH}	RESET HIGH Time	10		ns
t_{SDO}	SDO Propagation Delay	10	30	ns
t_S	Settling Time		10	µs

TABLE III. Timing Specifications (T_A = –40°C to +85°C).

Figure 16 shows a DAC7632 in a 4-20mA current output configuration. The output current can be determined by Equation 3:

$$I_{OUT} = \left(\left(\frac{2.5V - 0.5V}{125\Omega}\right) \bullet \left(\frac{N}{65,536}\right)\right) + \left(\frac{0.5V}{125\Omega}\right)$$

At full-scale, the output current is 16mA, plus the 4mA, for the zero current. At zero scale the output current is the offset current of 4mA (0.5V/125Ω).

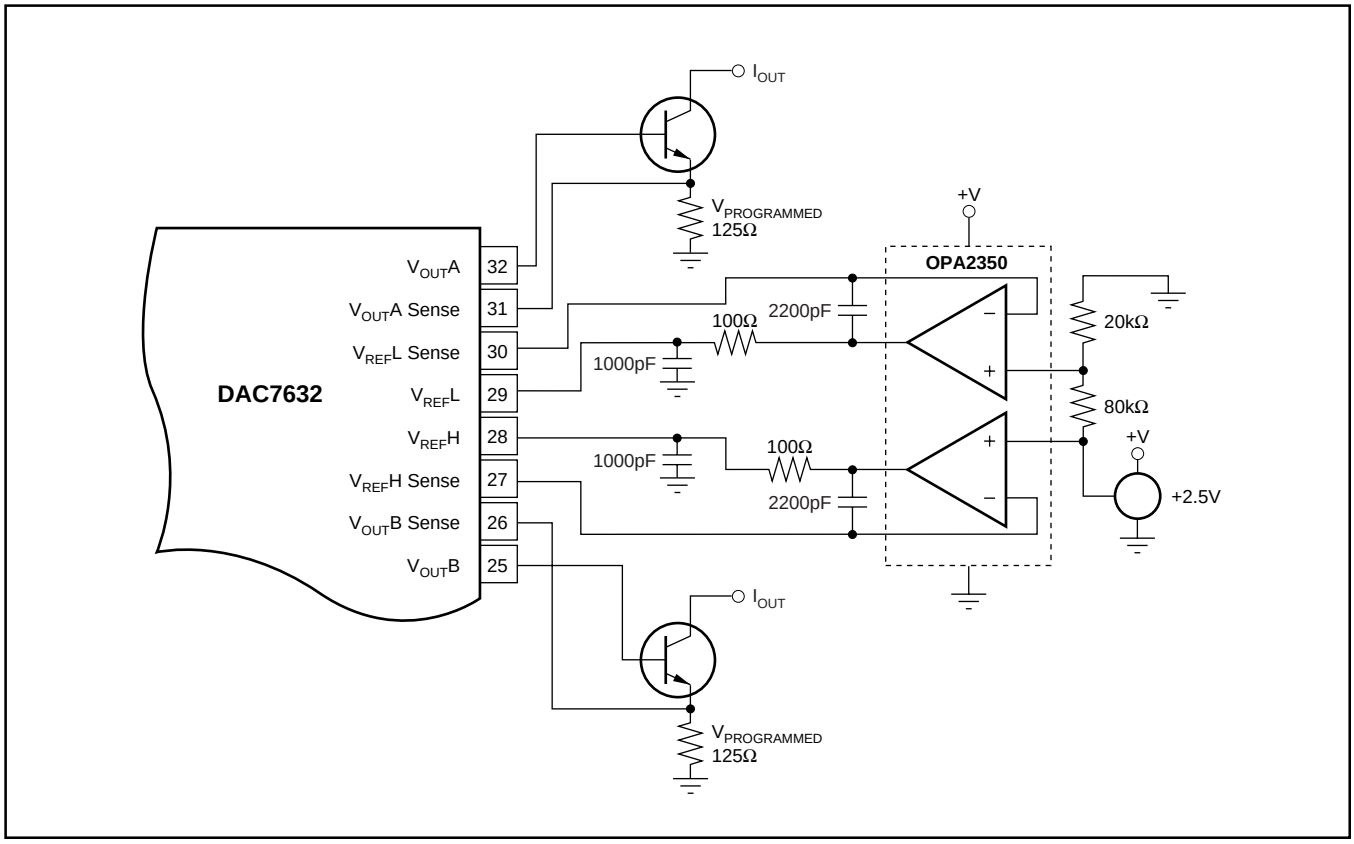

FIGURE 16. 4-20mA Digitally-Controlled Current Source.

Revision History

DATE	REVISION	PAGE	SECTION	DESCRIPTION
4/08	A	—	Entire Data Sheet	Updated document format.
		4	Electrical Characteristics	Changed section title from "Dual Supply" to "Single Supply" (typo).
		13	Figures 2, 3	Updated text in figures to correct names (typo).

NOTE: Page numbers for previous revisions may differ from page numbers in the current version.

PACKAGING INFORMATION

Orderable Device	Status (1)	Package Type	Package Drawing	Pins	Package Qty	Eco Plan (2)	Lead/Ball Finish (6)	MSL Peak Temp (3)	Op Temp (°C)	Device Marking (4/5)	Samples
DAC7632VFBT	ACTIVE	LQFP	VF	32	250	Green (RoHS & no Sb/Br)	CU NIPDAU	Level-3-260C-168 HR	-40 to 85	DAC7632 B	Samples
DAC7632VFBTG4	ACTIVE	LQFP	VF	32	250	Green (RoHS & no Sb/Br)	CU NIPDAU	Level-3-260C-168 HR	-40 to 85	DAC7632 B	Samples
DAC7632VFR	ACTIVE	LQFP	VF	32	1000	Green (RoHS & no Sb/Br)	CU NIPDAU	Level-3-260C-168 HR	-40 to 85	DAC7632	Samples
DAC7632VFT	ACTIVE	LQFP	VF	32	250	Green (RoHS & no Sb/Br)	CU NIPDAU	Level-3-260C-168 HR	-40 to 85	DAC7632	Samples

(1) The marketing status values are defined as follows:
ACTIVE: Product device recommended for new designs.
LIFEBUY: TI has announced that the device will be discontinued, and a lifetime-buy period is in effect.
NRND: Not recommended for new designs. Device is in production to support existing customers, but TI does not recommend using this part in a new design.
PREVIEW: Device has been announced but is not in production. Samples may or may not be available.
OBSOLETE: TI has discontinued the production of the device.

(2) **RoHS:** TI defines "RoHS" to mean semiconductor products that are compliant with the current EU RoHS requirements for all 10 RoHS substances, including the requirement that RoHS substance do not exceed 0.1% by weight in homogeneous materials. Where designed to be soldered at high temperatures, "RoHS" products are suitable for use in specified lead-free processes. TI may reference these types of products as "Pb-Free".
RoHS Exempt: TI defines "RoHS Exempt" to mean products that contain lead but are compliant with EU RoHS pursuant to a specific EU RoHS exemption.
Green: TI defines "Green" to mean the content of Chlorine (Cl) and Bromine (Br) based flame retardants meet JS709B low halogen requirements of <=1000ppm threshold. Antimony trioxide based flame retardants must also meet the <=1000ppm threshold requirement.

(3) MSL, Peak Temp. - The Moisture Sensitivity Level rating according to the JEDEC industry standard classifications, and peak solder temperature.

(4) There may be additional marking, which relates to the logo, the lot trace code information, or the environmental category on the device.

(5) Multiple Device Markings will be inside parentheses. Only one Device Marking contained in parentheses and separated by a "~" will appear on a device. If a line is indented then it is a continuation of the previous line and the two combined represent the entire Device Marking for that device.

(6) Lead/Ball Finish - Orderable Devices may have multiple material finish options. Finish options are separated by a vertical ruled line. Lead/Ball Finish values may wrap to two lines if the finish value exceeds the maximum column width.

Important Information and Disclaimer: The information provided on this page represents TI's knowledge and belief as of the date that it is provided. TI bases its knowledge and belief on information provided by third parties, and makes no representation or warranty as to the accuracy of such information. Efforts are underway to better integrate information from third parties. TI has taken and

continues to take reasonable steps to provide representative and accurate information but may not have conducted destructive testing or chemical analysis on incoming materials and chemicals.
TI and TI suppliers consider certain information to be proprietary, and thus CAS numbers and other limited information may not be available for release.

In no event shall TI's liability arising out of such information exceed the total purchase price of the TI part(s) at issue in this document sold by TI to Customer on an annual basis.

TAPE AND REEL INFORMATION

REEL DIMENSIONS

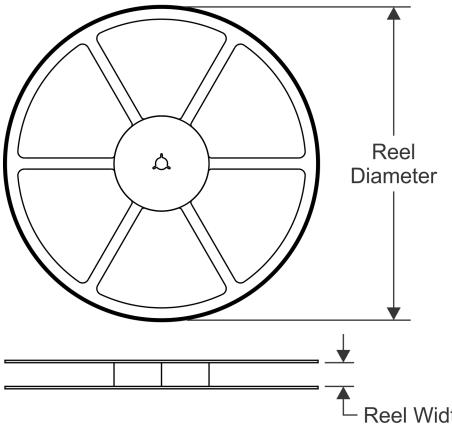

TAPE DIMENSIONS

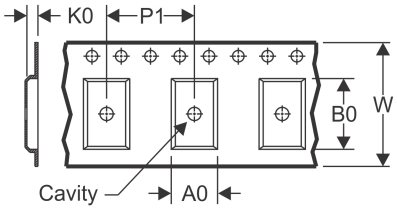

A0	Dimension designed to accommodate the component width
B0	Dimension designed to accommodate the component length
K0	Dimension designed to accommodate the component thickness
W	Overall width of the carrier tape
P1	Pitch between successive cavity centers

QUADRANT ASSIGNMENTS FOR PIN 1 ORIENTATION IN TAPE

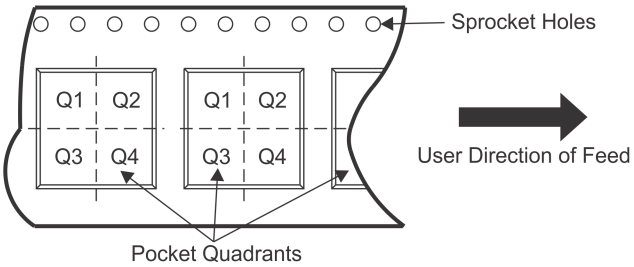

*All dimensions are nominal

Device	Package Type	Package Drawing	Pins	SPQ	Reel Diameter (mm)	Reel Width W1 (mm)	A0 (mm)	B0 (mm)	K0 (mm)	P1 (mm)	W (mm)	Pin1 Quadrant
DAC7632VFBT	LQFP	VF	32	250	180.0	16.4	9.6	9.6	1.9	12.0	16.0	Q2
DAC7632VFR	LQFP	VF	32	1000	330.0	16.4	9.6	9.6	1.9	12.0	16.0	Q2
DAC7632VFT	LQFP	VF	32	250	180.0	16.4	9.6	9.6	1.9	12.0	16.0	Q2

TAPE AND REEL BOX DIMENSIONS

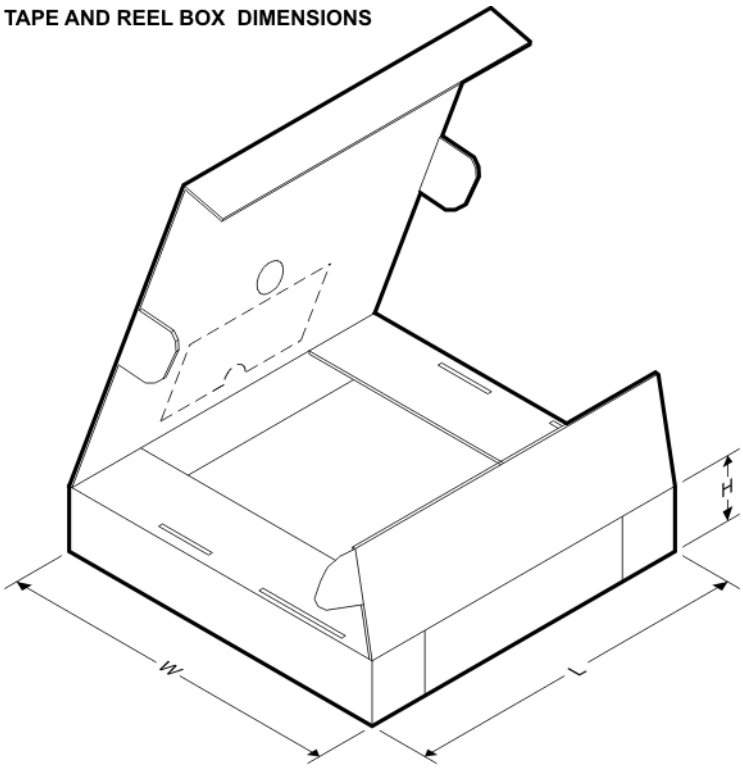

*All dimensions are nominal

Device	Package Type	Package Drawing	Pins	SPQ	Length (mm)	Width (mm)	Height (mm)
DAC7632VFBT	LQFP	VF	32	250	213.0	191.0	55.0
DAC7632VFR	LQFP	VF	32	1000	350.0	350.0	43.0
DAC7632VFT	LQFP	VF	32	250	213.0	191.0	55.0

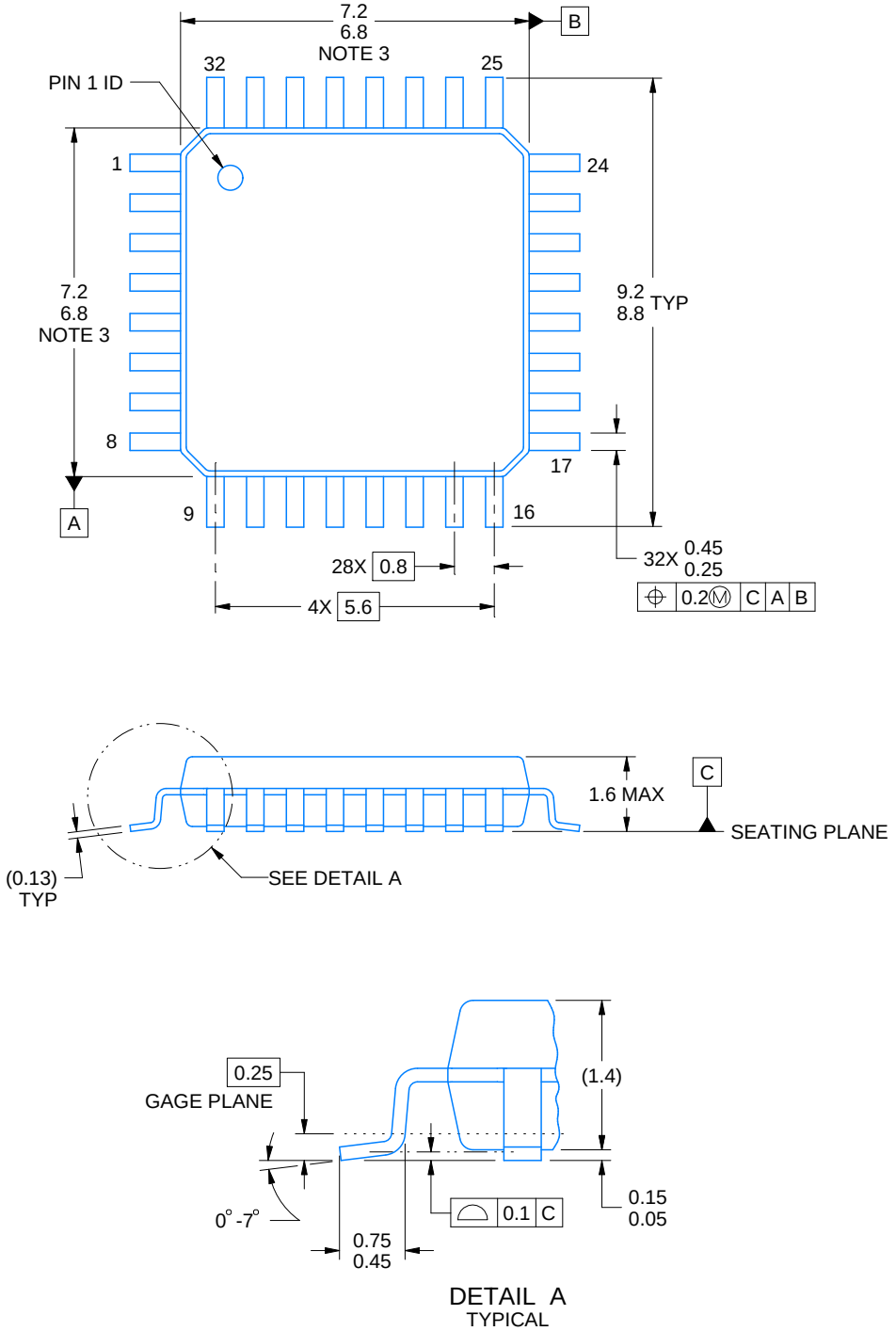

4219769/A 04/2019

PowerPAD is a trademark of Texas Instruments.

NOTES:

1. All linear dimensions are in millimeters. Any dimensions in parenthesis are for reference only. Dimensioning and tolerancing per ASME Y14.5M.
2. This drawing is subject to change without notice.
3. This dimension does not include mold flash, protrusions, or gate burrs.
4. Reference JEDEC registration MS-026.

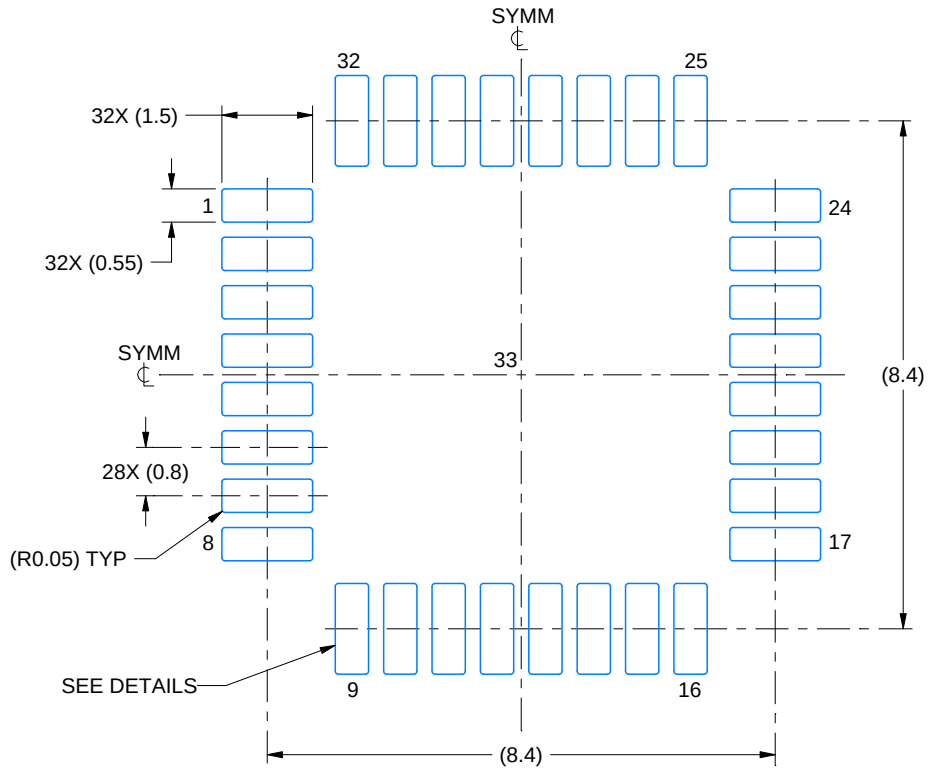

LAND PATTERN EXAMPLE
EXPOSED METAL SHOWN
SCALE:8X

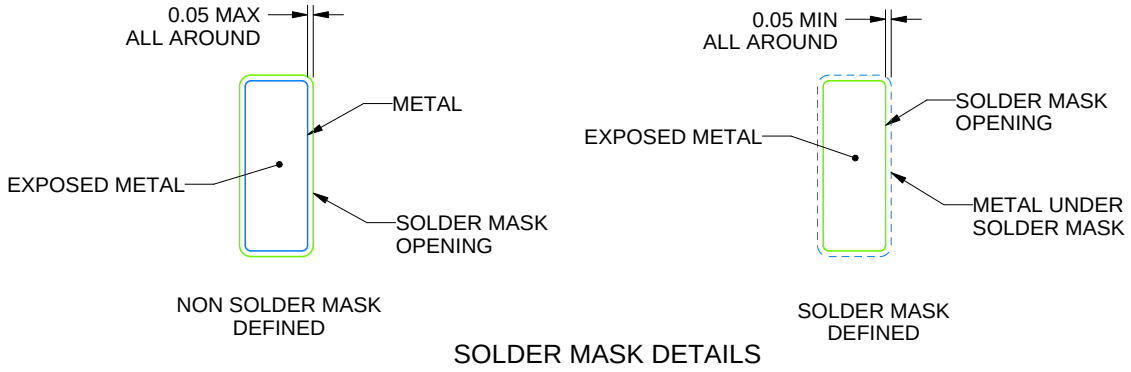

SOLDER MASK DETAILS

4219769/A 04/2019

NOTES: (continued)

5. Publication IPC-7351 may have alternate designs.
6. Solder mask tolerances between and around signal pads can vary based on board fabrication site.

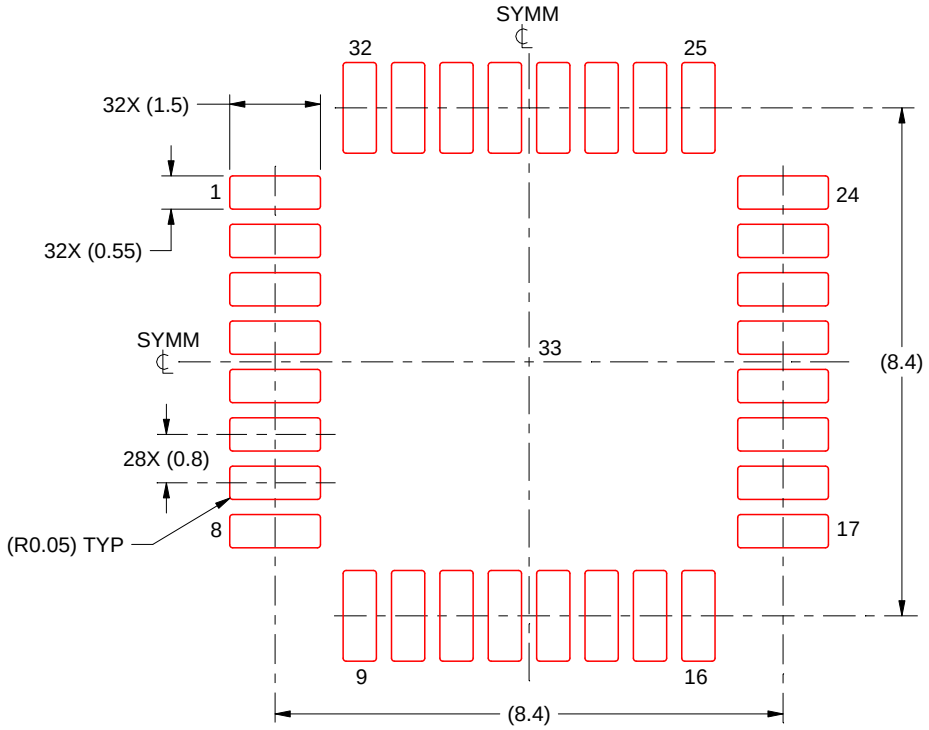

SOLDER PASTE EXAMPLE
SCALE:8X

4219769/A 04/2019

NOTES: (continued)

7. Laser cutting apertures with trapezoidal walls and rounded corners may offer better paste release. IPC-7525 may have alternate design recommendations.
8. Board assembly site may have different recommendations for stencil design.

IMPORTANT NOTICE AND DISCLAIMER

TI PROVIDES TECHNICAL AND RELIABILITY DATA (INCLUDING DATASHEETS), DESIGN RESOURCES (INCLUDING REFERENCE DESIGNS), APPLICATION OR OTHER DESIGN ADVICE, WEB TOOLS, SAFETY INFORMATION, AND OTHER RESOURCES “AS IS” AND WITH ALL FAULTS, AND DISCLAIMS ALL WARRANTIES, EXPRESS AND IMPLIED, INCLUDING WITHOUT LIMITATION ANY IMPLIED WARRANTIES OF MERCHANTABILITY, FITNESS FOR A PARTICULAR PURPOSE OR NON-INFRINGEMENT OF THIRD PARTY INTELLECTUAL PROPERTY RIGHTS.

These resources are intended for skilled developers designing with TI products. You are solely responsible for (1) selecting the appropriate TI products for your application, (2) designing, validating and testing your application, and (3) ensuring your application meets applicable standards, and any other safety, security, or other requirements. These resources are subject to change without notice. TI grants you permission to use these resources only for development of an application that uses the TI products described in the resource. Other reproduction and display of these resources is prohibited. No license is granted to any other TI intellectual property right or to any third party intellectual property right. TI disclaims responsibility for, and you will fully indemnify TI and its representatives against, any claims, damages, costs, losses, and liabilities arising out of your use of these resources.

TI’s products are provided subject to TI’s Terms of Sale (www.ti.com/legal/termsofsale.html) or other applicable terms available either on ti.com or provided in conjunction with such TI products. TI’s provision of these resources does not expand or otherwise alter TI’s applicable warranties or warranty disclaimers for TI products.

Mailing Address: Texas Instruments, Post Office Box 655303, Dallas, Texas 75265
Copyright © 2019, Texas Instruments Incorporated

Looking for pricing, stock, or lifecycle information?

Click below to explore more details on WIN SOURCE:

- View DAC7632VFBT on WIN SOURCE
- Texas Instruments Information

Optimize Your Supply Chain with WIN SOURCE Solutions

- Global Sourcing Solution
- Obsolete Management
- Cost Control Management
- Shortage Management
- Alternative Solution
- Excess Inventory Management