THE DATASHEET OF

FFPF30UP20DPTU

www.win-source.net 0086-755-83957316

March 2006

FAIRCHILD SEMICONDUCTOR®

FFPF30UP20DP
Ultrafast Recovery Power Rectifier

Features

- Ultrafast with Soft Recovery : < 45ns (@I_F = 15A)
- High Reverse Voltage : V_{RRM} = 200V
- Avalanche Energy Rated
- Planar Construction

Applications

- Output Rectifiers
- Switching Mode Power Supply
- Free-wheeling diode for motor application
- Power switching circuits

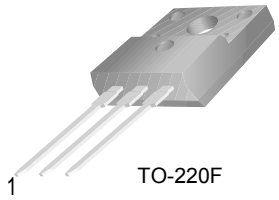

TO-220F

1.Anode 2.Cathode 3.Anode

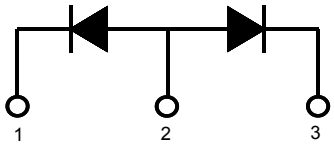

1. Cathode 2. Anode 3. Cathode

Absolute Maximum Ratings (per diode) T_C = 25°C unless otherwise noted

Symbol	Parameter	Value	Units
V_{RRM}	Peak Repetitive Reverse Voltage	200	V
V_{RWM}	Working Peak Reverse Voltage	200	V
V_R	DC Blocking Voltage	200	V
$I_{F(AV)}$	Average Rectified Forward Current @ T_C = 105°C	15	A
I_{FSM}	Non-repetitive Peak Surge Current 60Hz Single Half-Sine Wave	150	A
T_J, T_{STG}	Operating Junction and Storage Temperature	- 65 to +150	°C

Thermal Characteristics

Symbol	Parameter	Max	Units
$R_{\theta JC}$	Maximum Thermal Resistance, Junction to Case	3.8	°C/W

Package Marking and Ordering Information

Device Marking	Device	Package	Reel Size	Tape Width	Quantity
F30UP20DP	FFPF30UP20DPTU	TO-220F	-	-	50

©2006 Fairchild Semiconductor Corporation

Electrical Characteristics (per diode) T_C = 25°C unless otherwise noted

Symbol	Parameter		Min.	Typ.	Max.	Units
V_{FM} *	I_F = 15A I_F = 15A	T_C = 25 °C T_C = 100 °C	- -	- -	1.15 1.0	V V
I_{RM} *	V_R = 200V V_R = 200V	T_C = 25 °C T_C = 100 °C	- -	- -	100 500	µA µA
t_{rr}	I_F =1A, di/dt = 100A/µs, V_{CC} = 30V I_F =15A, di/dt = 200A/µs, V_{CC} = 130V	T_C = 25 °C T_C = 25 °C	- -	- -	35 45	ns ns
t_a t_b Q_{rr}	I_F =15A, di/dt = 200A/µs, V_{CC} = 130V	T_C = 25 °C T_C = 25 °C T_C = 25 °C	- - -	13 11 24	- - -	ns ns nC
W_{AVL}	Avalanche Energy (L = 40mH)		20	-	-	mJ

* Pulse Test: Pulse Width=300µs, Duty Cycle=2%

Test Circuit and Waveforms

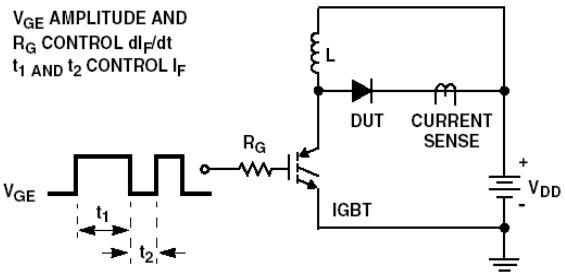

t_{rr} TEST CIRCUIT

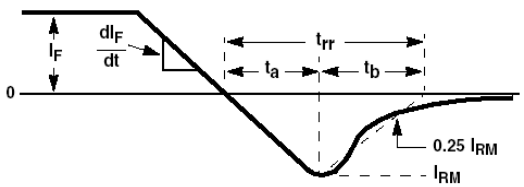

t_{rr} WAVEFORMS AND DEFINITIONS

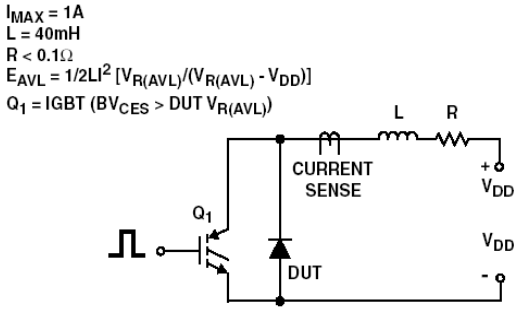

AVALANCHE ENERGY TEST CIRCUIT

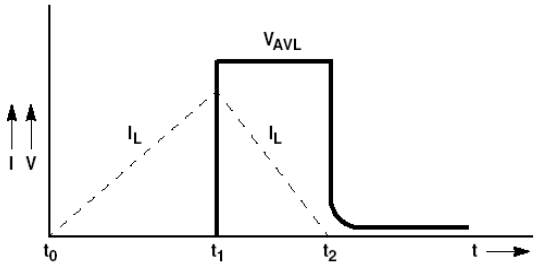

AVALANCHE CURRENT AND VOLTAGE WAVEFORMS

Typical Performance Characteristics

Figure 1. Typical Forward Voltage Drop

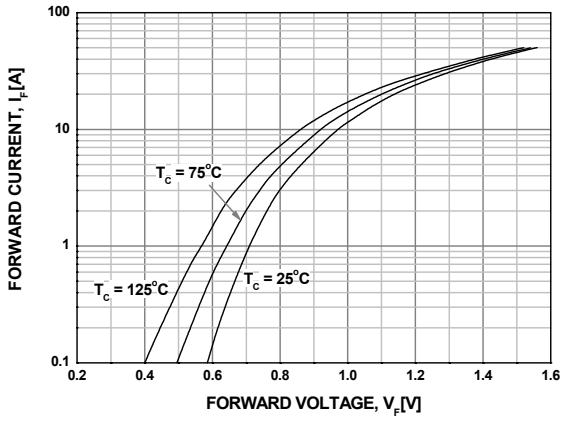

Figure 2. Typical Reverse Current

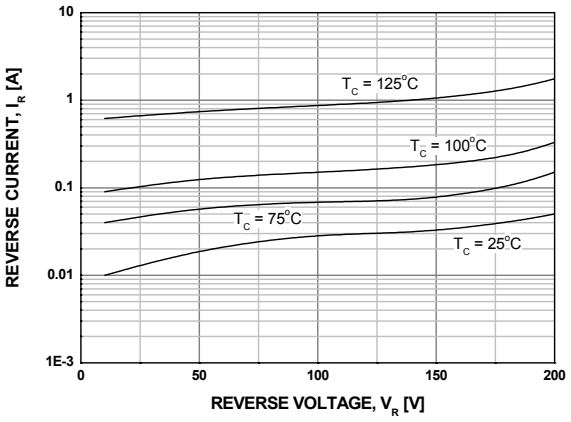

Figure 3. Typical Junction Capacitance

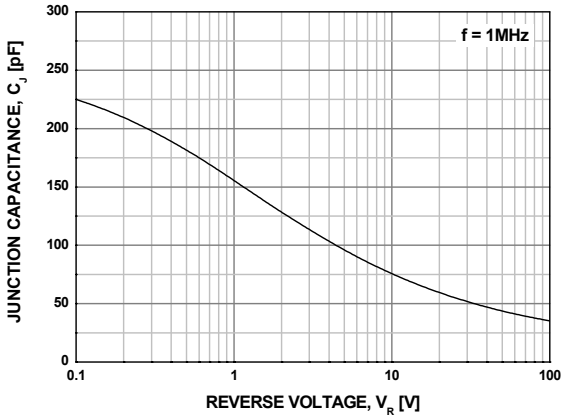

Figure 4. Typical Reverse Recovery Time

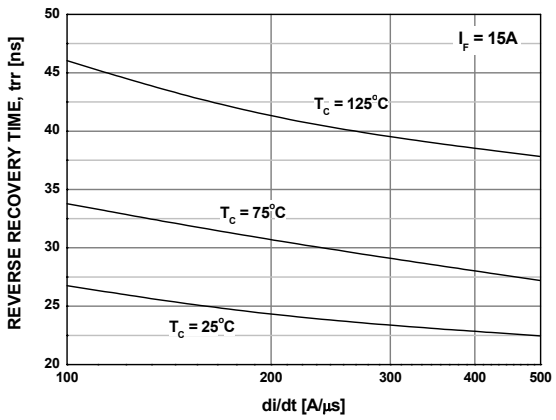

Figure 5. Typical Reverse Recovery Current

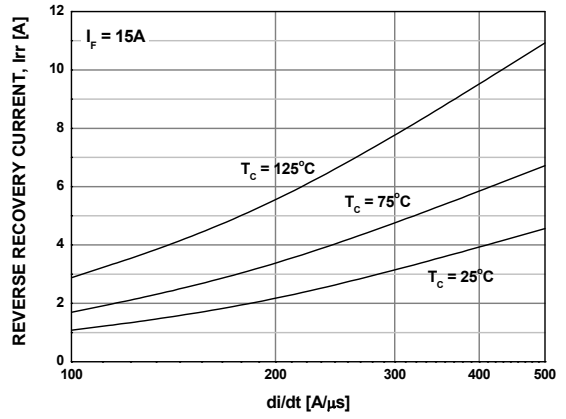

Figure 6. Forward Current Deration Curve

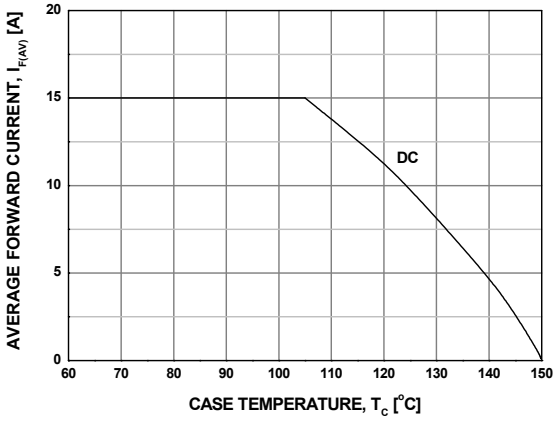

Package Demensions

TO-220F

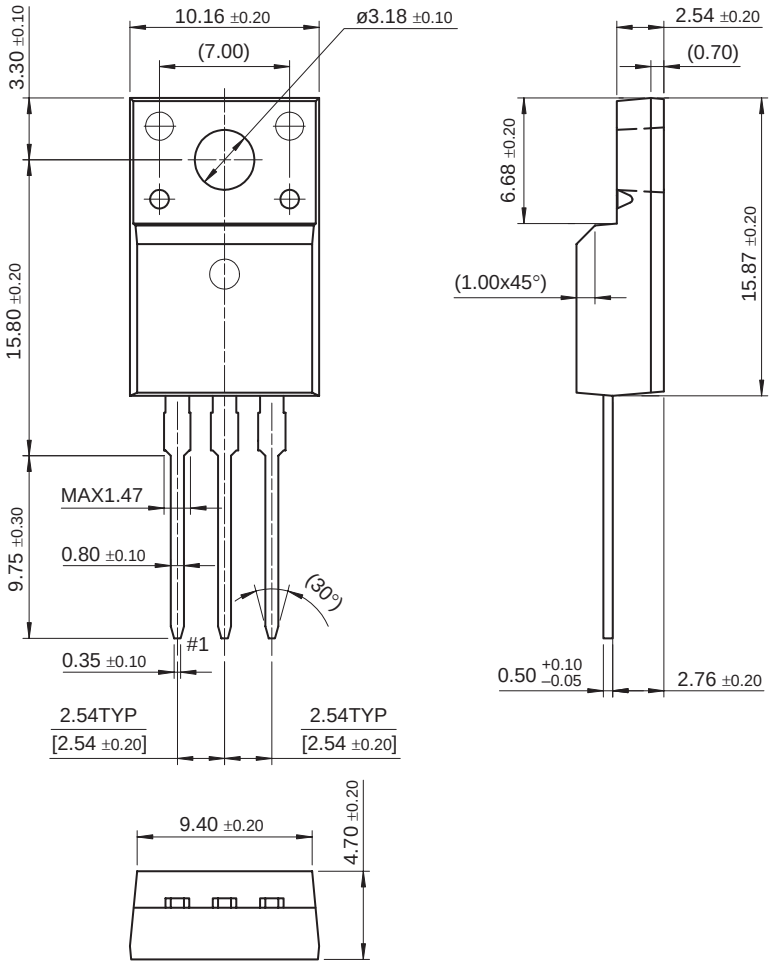

Dimensions in Millimeters

TRADEMARKS

The following are registered and unregistered trademarks Fairchild Semiconductor owns or is authorized to use and is not intended to be an exhaustive list of all such trademarks.

ACEx™
ActiveArray™
Bottomless™
Build it Now™
CoolFET™
CROSSVOLT™
DOME™
EcoSPARK™
E^2CMOS™
EnSigna™
FACT™
FACT Quiet Series™
FAST®
FASTr™
FPS™
FRFET™
GlobalOptoisolator™
GTO™
HiSeC™
I^2C™
i-Lo™
ImpliedDisconnect™
IntelliMAX™
ISOPLANAR™
LittleFET™
MICROCOUPLER™
MicroFET™
MicroPak™
MICROWIRE™
MSX™
MSXPro™
OCX™
OCXPro™
OPTOLOGIC®
OPTOPLANAR™
PACMAN™
POP™
Power247™
PowerEdge™
PowerSaver™
PowerTrench®
QFET®
QS™
QT Optoelectronics™
Quiet Series™
RapidConfigure™
RapidConnect™
µSerDes™
Scalar Pump™
SILENT SWITCHER®
SMART START™
SPM™
Stealth™
SuperFET™
SuperSOT™-3
SuperSOT™-6
SuperSOT™-8
SyncFET™
TCM™
TinyLogic®
TINYOPTO™
TruTranslation™
UHC™
UltraFET®
UniFET™
VCX™
Wire™

Across the board. Around the world.™
The Power Franchise®
Programmable Active Droop™

DISCLAIMER

FAIRCHILD SEMICONDUCTOR RESERVES THE RIGHT TO MAKE CHANGES WITHOUT FURTHER NOTICE TO ANY PRODUCTS HEREIN TO IMPROVE RELIABILITY, FUNCTION OR DESIGN. FAIRCHILD DOES NOT ASSUME ANY LIABILITY ARISING OUT OF THE APPLICATION OR USE OF ANY PRODUCT OR CIRCUIT DESCRIBED HEREIN; NEITHER DOES IT CONVEY ANY LICENSE UNDER ITS PATENT RIGHTS, NOR THE RIGHTS OF OTHERS.

LIFE SUPPORT POLICY

FAIRCHILD'S PRODUCTS ARE NOT AUTHORIZED FOR USE AS CRITICAL COMPONENTS IN LIFE SUPPORT DEVICES OR SYSTEMS WITHOUT THE EXPRESS WRITTEN APPROVAL OF FAIRCHILD SEMICONDUCTOR CORPORATION.
As used herein:

1. Life support devices or systems are devices or systems which, (a) are intended for surgical implant into the body, or (b) support or sustain life, or (c) whose failure to perform when properly used in accordance with instructions for use provided in the labeling, can be reasonably expected to result in significant injury to the user.

2. A critical component is any component of a life support device or system whose failure to perform can be reasonably expected to cause the failure of the life support device or system, or to affect its safety or effectiveness.

PRODUCT STATUS DEFINITIONS

Definition of Terms

Datasheet Identification	Product Status	Definition
Advance Information	Formative or In Design	This datasheet contains the design specifications for product development. Specifications may change in any manner without notice.
Preliminary	First Production	This datasheet contains preliminary data, and supplementary data will be published at a later date. Fairchild Semiconductor reserves the right to make changes at any time without notice in order to improve design.
No Identification Needed	Full Production	This datasheet contains final specifications. Fairchild Semiconductor reserves the right to make changes at any time without notice in order to improve design.
Obsolete	Not In Production	This datasheet contains specifications on a product that has been discontinued by Fairchild semiconductor. The datasheet is printed for reference information only.

Rev. I18

Looking for pricing, stock, or lifecycle information?

Click below to explore more details on WIN SOURCE:

- View FFPF30UP20DPTU on WIN SOURCE
- Fairchild/ON Semiconductor Information

Optimize Your Supply Chain with WIN SOURCE Solutions

- Global Sourcing Solution
- Obsolete Management
- Cost Control Management
- Shortage Management
- Alternative Solution
- Excess Inventory Management