THE DATASHEET OF

FSRH090100RN000B

www.win-source.net 0086-755-83957316

FERRITECORE
FSRH Series

Reference Specification

1. Scope

This reference specification is applied to ferrite core (FSRH Series) used for noise suppression.
Please contact us when using this product for any other applications than described in the above.

2. Murata Part Number

Please see P.3/11.

〈 Part Numbering 〉

FS	RH	02	1	049	RN	B0	0	B
(1)	(2)	(3)	(4)	(5)	(6)	(7)	(8)	(9)

(1)Ferrite
(2)Beads Core
(3)Dimensions
(4)Outer Dimension Supplement Code
(5)Length
(6) Material
(7) Process 〔00:Standard Type / B0:Barrel Type〕
(8) Individual Specification Code
(9) Packing Code B:Bulk / T:Tray

3.Material

Ferrite	Permeability (Ref.)	Curie temperature	Electrical resistance
RN (Ni-Zn Type)	550 ± 30%	≧130 °C	≧10^5 Ω・m

4. Use in the environment

Operating temperature : -25~+85°C
Storage temperature : -25~+125°C

5. Shape and Dimension

Please see P.5/8~8/8.

6. Appearance Standard

・Please see P.4/8 as for Limit size of defect (Xmm^2) fig. 1
・If there is any doubt about the appearance, the worst samples shall be made.

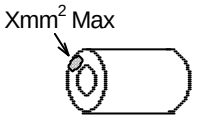

fig.1

7. Electrical Characteristic

No.	Ferrite	Specification	Test Methods
7.1	Impedance	Please see P.4/8.	Instruments : AGILENT4191A (or equivalent) Frequency : 100MHz Lead wire : 2UEW AWG#18 (Please see P.4/8) Temperature : 23±2°C Impedance shall be measured at fig.2 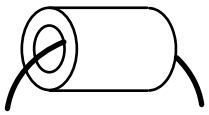 fig.2
7.2	Frequency-characteristics of Impedance (reference)	Please see P. 5/8~8/8.	

8. Inspection

Test condition

Characteristics shall be measured at 20±15°C, 85% RH under. If the measured value should be doubted, characteristics shall be measured at 23±2°C, 85% RH under again.

Inspection Level: ANSI/ASQC Z1.4-1993, Revel S-4, Normal, Single inspection

Inspection item	Judgment	Measurement
Characteristic	n=10,Ac=0,Re=1	HP4191A (or equivalent)
Appearance	AQL 2.5%	Visual Inspection
Dimension	n=10,Ac=0,Re=1	Slide Calipers… etc.

9. Packing

・Quantity in package・weight…Please see P.4/8.

・Basic packing

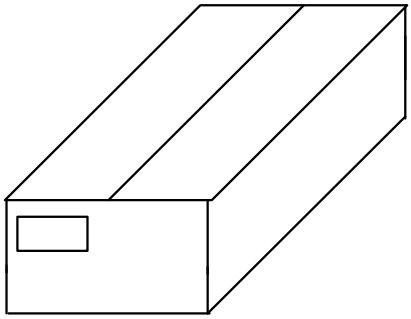

fig.3 Outer case

Outer Case Dimensions(mm)			Inner Case
W	D	H	
406	265	118	<FSRH**********B> Inner Case (Bulk)
			<FSRH**********T> Tray

※Above Outer Case size is typical

When quantity is less than standard quantity, size or kind of outer case and inner case is changed if needed.

・Marking for Outside package

Customer name Purchasing Order Number, Customer Part Number, MURATA part number, Inspection number(∗1),RoHS Marking(∗2), Quantity, etc

∗1) « Expression of Inspection No. » □□ OOOO ××× (1) (2) (3)

(1) Factory Code
(2) Date
First digit : Year / Last digit of year
Second digit : Month / Jan. to Sep. → 1 to 9, Oct. to Dec. → O,N,D
Third, Fourth digit : Day
(3) Serial No.

∗2) « Expression of RoHS Marking » ROHS – Y (△) (1) (2)

(1) RoHS regulation conformity parts.
(2) MURATA classification number

10. Changes of specification

Any changes in these devices shall be enforced after consultation.

11. ⚠CAUTION

1) Limitation of Applications

Please contact us before using our products for the under mentioned applications requiring especially high reliability in order to prevent defects which might directly cause damage to other party's life, body or property (listed below).

(1) Aircraft equipment
(2) Aerospace equipment
(3) Undersea equipment
(4) Nuclear control apparatus
(5) Medical equipment
(6) Transportation equipment (automobiles, trains, ships, etc.)
(7) Traffic signal equipment
(8) Disaster prevention / crime prevention equipment
(9) Data-processing equipment
(10) Applications of similar complexity or with reliability requirements comparable to the applications listed in the above

2) Be sure to provide an appropriate fail-safe function on your product to prevent a second damage that may be caused by the abnormal function or the failure of our product.

12. Notice

1) Protect product from damage that may occur in transit such as cracking of core.
2) Handle product with care. Do not drop.
3) Do not apply excessive force to the product.
4) Core should be taken to damage of lead wire when it is inserting or rolling in core.
5) This product is designed for use in the environment specified in this approval drawing; do not be used in the following environments or under the following conditions.
   (1) Ambient air containing corrosive gas. (Cl_2, H_2S, NH_3, SO_2, NO_X, etc.)
   (2) In liquid.
   (3) Other environments similar to (1) through (2).

Please contact us before using our products for the below mentioned environments.

13. ⚠ Note:

1) Please make sure that your product has been evaluated in view of your specifications with our product being mounted to your product.
2) You are requested not to use our product deviating from the reference specifications.
3) The contents of this reference specification are subject to change without advance notice.

Please approve our product specifications or transact the approval sheet for product specifications before ordering.

Murata Part Number, Appearance,Characteristic,Packing List

MURATA Part Number	Material	appearance (Xmm^2)	Dimension	Characteristic			Packing quantity		Mass	
				Impedance	Lead wire		Min. Qty.	Total Qty.	Unit Mass	Total Mass
FSRH021049RNB01B	RN	1.5	fig.1	≧27Ω	φ0.6	30mm	20,000	100,000	0.05g	5.8kg
FSRH030060RNB00B	RN	2	fig.2	≧48Ω	φ0.8	25mm	10,000	50,000	0.23g	12.0kg
FSRH041D85RNB00B	RN	2	fig.3	≧40Ω	φ0.8	25mm	10,000	50,000	0.23g	12.0kg
FSRH044C00RNB00B	RN	2	fig.4	≧30Ω	φ0.8	50mm	10,000	50,000	0.13g	7.0kg
FSRH044040RNB00B	RN	2	fig.4	≧35Ω	φ0.8	50mm	5,000	25,000	0.17g	4.8kg
FSRH044050RNB00B	RN	2	fig.4	≧37Ω	φ0.8	50mm	10,000	50,000	0.21g	11.0kg
FSRH050050RN000B	RN	2	fig.5	≧44Ω	φ0.8	30mm	6,000	30,000	0.4g	12.5kg
FSRH070080RN000B	RN	2.5	fig.6	≧41Ω	φ0.8	50mm	1,500	7,500	1.1g	8.4kg
FSRH070140RN000B	RN	2.5	fig.6	≧54Ω	φ0.8	50mm	1,000	5,000	1.9g	10.2kg
FSRH090100RN000B	RN	4	fig.7	≧48Ω	AWG18	65mm	800	4,000	2.2g	9.8kg
FSRH090160RN000B	RN	4	fig.7	≧73Ω	AWG18	60mm	500	2,500	3.6g	9.9kg
FSRH090200RN000T	RN	5	fig.7	≧95Ω	AWG18	65mm	200	1,200	4.5g	6.4kg
FSRH091100RN000B	RN	4	fig.8	≧66Ω	AWG18	60mm	800	4,000	2.5g	10.9kg
FSRH091160RN000T	RN	4	fig.8	≧100Ω	AWG18	60mm	210	1,260	4.0g	6.0kg

※When quantity is less than standard quantity, size or kind of outer case and inner case is changed if needed.

Shape and Dimension （ＵＮＩＴ：mm）

Frequency-characteristics of Impedance (reference)
Instruments : AGILENT4191A / Lead wire: Through
(Please see P.4/8.)

fig. 1

Murata Part Number		Barrel
FSRH021049RNB01B		○

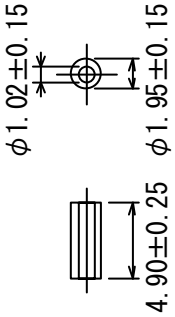

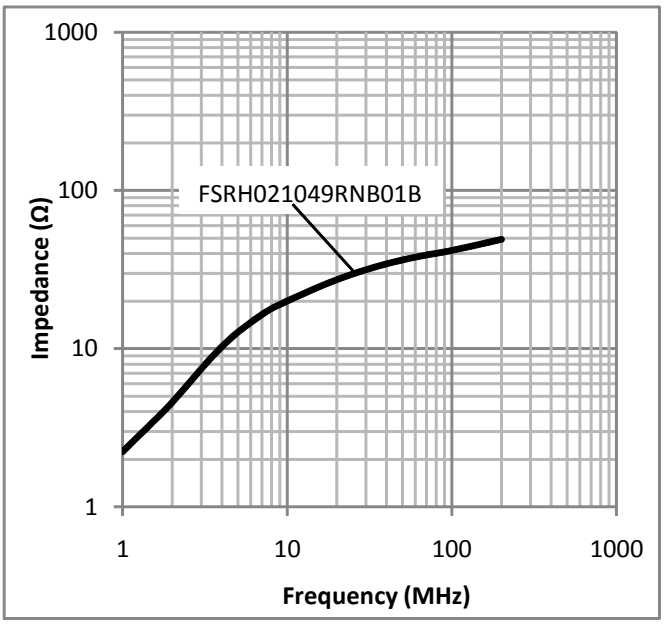

fig. 2

Murata Part Number		Barrel
FSRH030060RNB00B		○

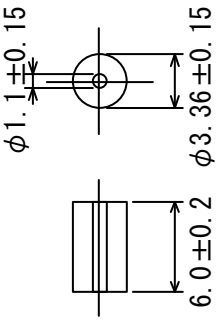

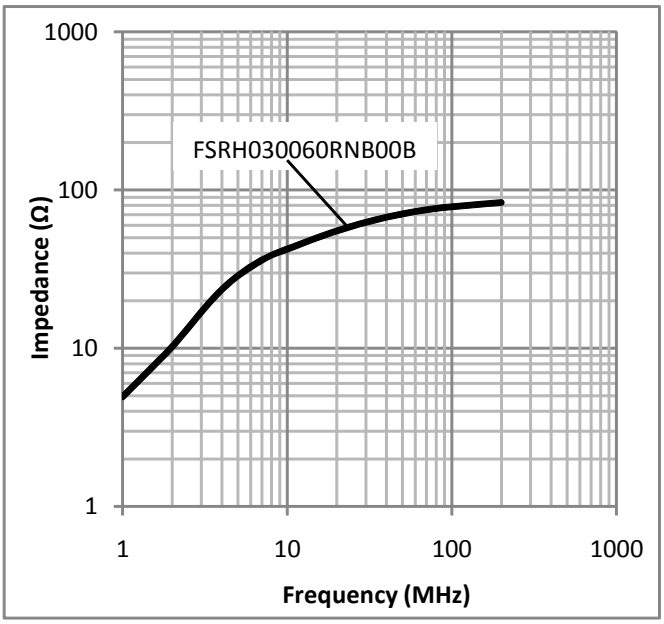

Shape and Dimension （ＵＮＩＴ：mm）

Frequency-characteristics of Impedance (reference)
Instruments : AGILENT4191A / Lead wire: Through
(Please see P.4/8.)

fig. 3

Murata Part Number		Barrel
FSRH041D85RNB00B		-

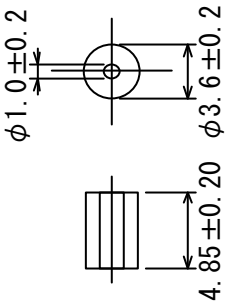

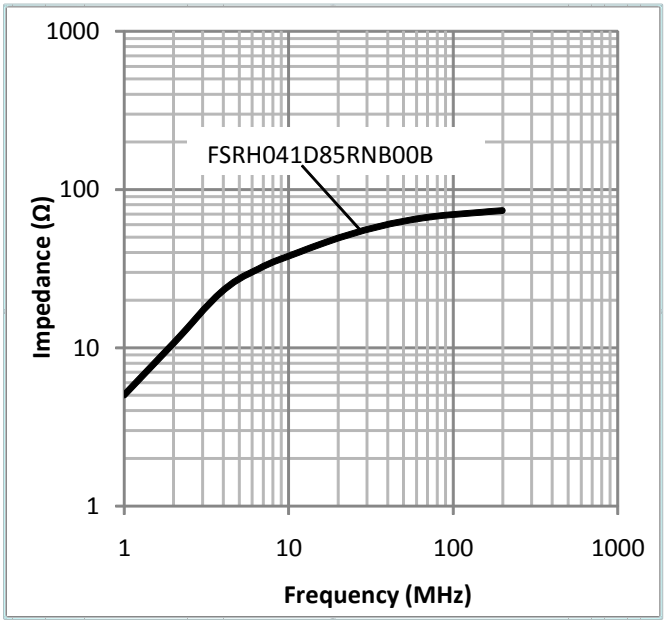

fig. 4

Murata Part Number	H	Barrel
FSRH044C00RNB00B	3.0±0.15	-
FSRH044040RNB00B	4.0±0.15	-
FSRH044050RNB00B	5.0±0.15	-

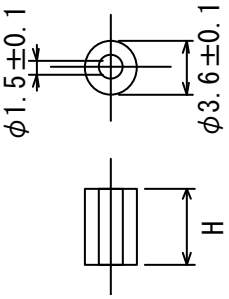

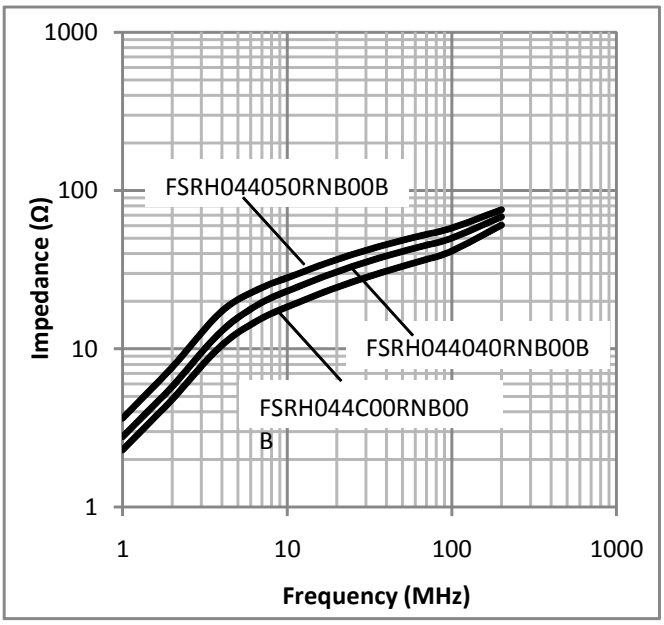

Shape and Dimension （ＵＮＩＴ：mm）

Frequency-characteristics of Impedance (reference)
Instruments : AGILENT4191A / Lead wire: Through
(Please see P.4/8.)

fig. 5

Murata Part Number	H	Barrel
FSRH050050RN000B	5.0±0.3	-

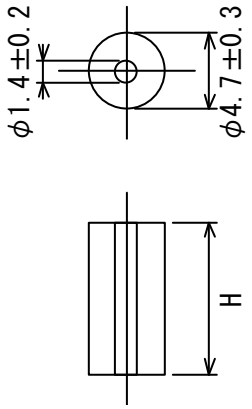

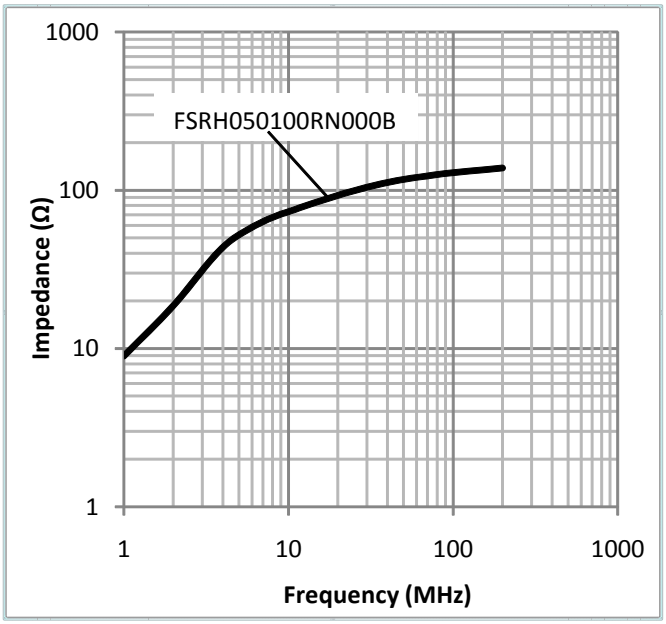

fig. 6

Murata Part Number	H	Barrel
FSRH070080RN000B	8.0±0.5	-
FSRH070140RN000B	14.0±0.5	-

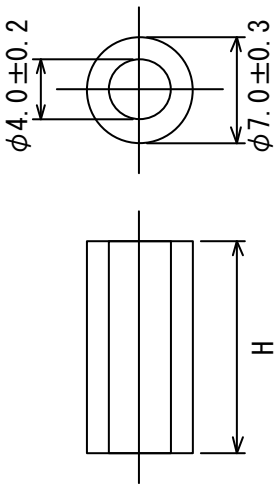

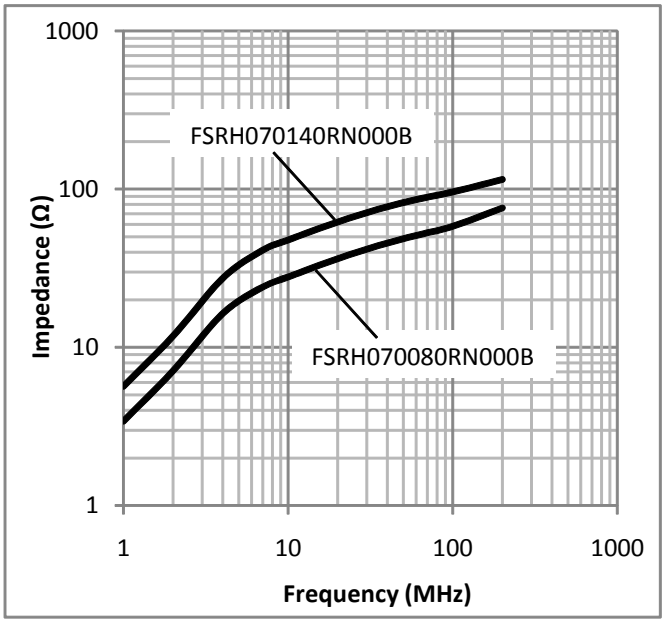

Shape and Dimension （ＵＮＩＴ：mm）

Frequency-characteristics of Impedance (reference)
Instruments : AGILENT4191A / Lead wire: Through
(Please see P.4/8.)

fig. 7

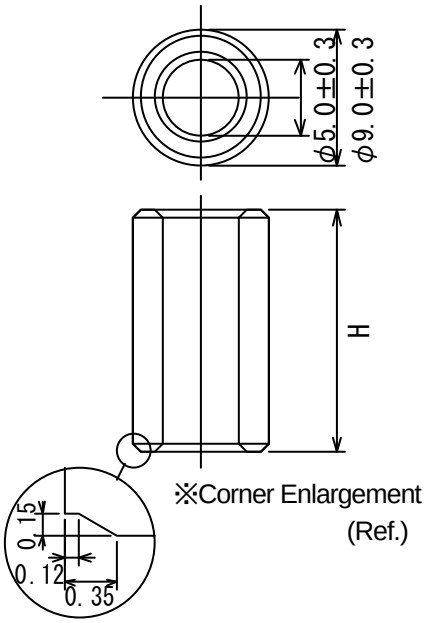

Murata Part Number	H	Barrel
FSRH090100RN000B	10.0±0.5	-
FSRH090160RN000B	16.0±0.5	-
FSRH090200RN000T	20.0±0.8	-

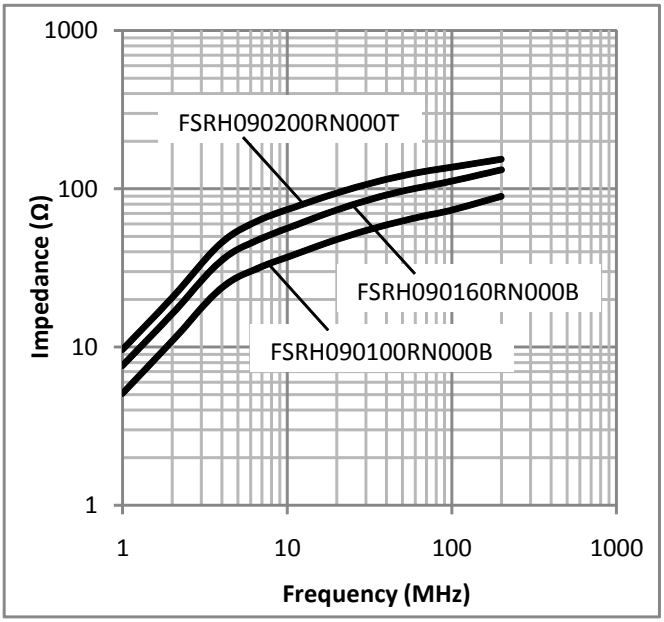

fig. 8

Murata Part Number	H	Barrel
FSRH091100RN000B	10.0±0.5	-
FSRH091160RN000T	16.0±0.5	-

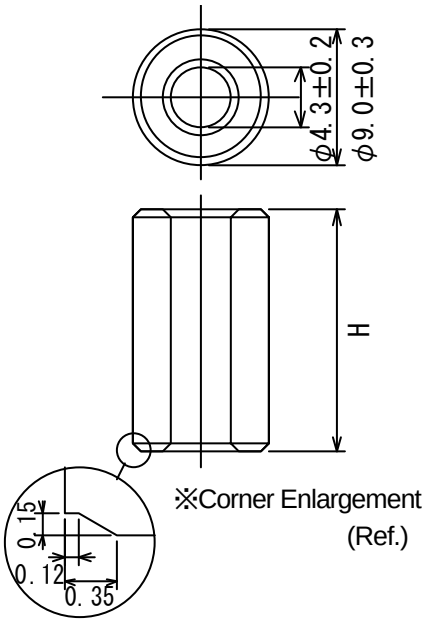

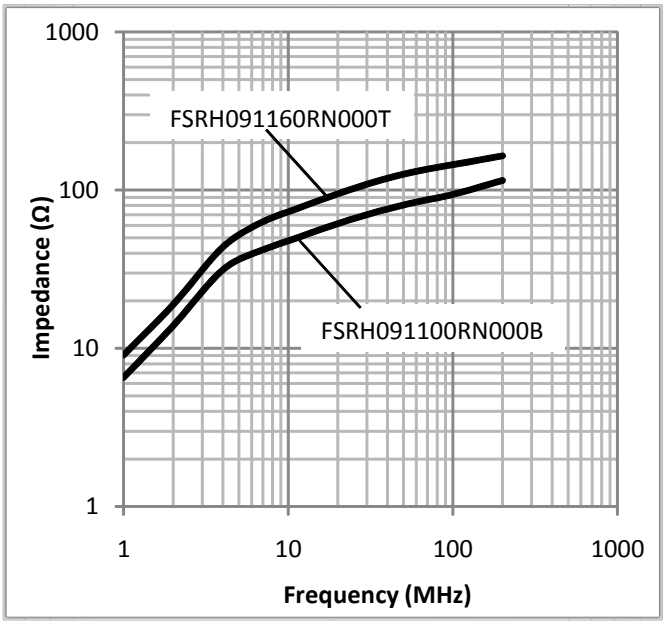

Looking for pricing, stock, or lifecycle information?

Click below to explore more details on WIN SOURCE:

- View FSRH090100RN000B on WIN SOURCE
- Murata Electronics North America Information

Optimize Your Supply Chain with WIN SOURCE Solutions

- Global Sourcing Solution
- Obsolete Management
- Cost Control Management
- Shortage Management
- Alternative Solution
- Excess Inventory Management