THE DATASHEET OF

IRLU3110ZPBF

www.win-source.net 0086-755-83957316

International
IOR Rectifier

PD - 97175B

IRLR3110ZPbF
IRLU3110ZPbF

HEXFET® Power MOSFET

Features

- Advanced Process Technology
- Ultra Low On-Resistance
- 175°C Operating Temperature
- Fast Switching
- Repetitive Avalanche Allowed up to Tjmax

Description

Specifically designed for Industrial applications, this HEXFET® Power MOSFET utilizes the latest processing techniques to achieve extremely low on-resistance per silicon area. Additional features of this design are a 175°C junction operating temperature, fast switching speed and improved repetitive avalanche rating . These features combine to make this design an extremely efficient and reliable device for use in Industrial applications and a wide variety of other applications.

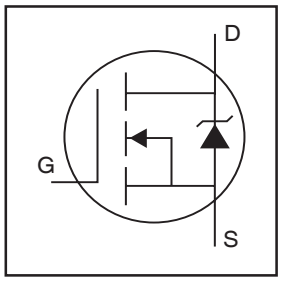

V_{DSS} = 100V

$R_{DS(on)}$ = 14mΩ

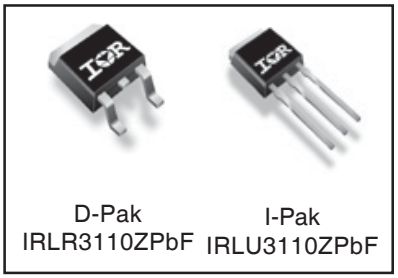

D-Pak IRLR3110ZPbF | I-Pak IRLU3110ZPbF

Absolute Maximum Ratings

	Parameter	Max.	Units
I_D @ T_C = 25°C	Continuous Drain Current, V_{GS} @ 10V (Silicon Limited)	63	A
I_D @ T_C = 100°C	Continuous Drain Current, V_{GS} @ 10V (Silicon Limited)	45	
I_D @ T_C = 25°C	Continuous Drain Current, V_{GS} @ 10V (Package Limited)	42	
I_{DM}	Pulsed Drain Current ①	250	
P_D @T_C = 25°C	Power Dissipation	140	W
	Linear Derating Factor	0.95	W/°C
V_{GS}	Gate-to-Source Voltage	±16	V
E_{AS} (Thermally limited)	Single Pulse Avalanche Energy②	110	mJ
E_{AS} (Tested)	Single Pulse Avalanche Energy Tested Value ⑥	140	
I_{AR}	Avalanche Current ①	See Fig.12a, 12b, 15, 16	A
E_{AR}	Repetitive Avalanche Energy ⑤		mJ
T_J T_{STG}	Operating Junction and Storage Temperature Range	-55 to + 175	°C
	Reflow Soldering Temperature, for 10 seconds	300	
	Mounting Torque, 6-32 or M3 screw	10 lbf•in (1.1N•m)	

Thermal Resistance

	Parameter	Typ.	Max.	Units
$R_{\theta JC}$	Junction-to-Case ⑧	——	1.05	°C/W
$R_{\theta JA}$	Junction-to-Ambient (PCB mount) ⑦⑧	——	40	
$R_{\theta JA}$	Junction-to-Ambient ⑧	——	110	

HEXFET® is a registered trademark of International Rectifier.

11/30/09

Electrical Characteristics @ T_J = 25°C (unless otherwise specified)

	Parameter	Min.	Typ.	Max.	Units	Conditions
$V_{(BR)DSS}$	Drain-to-Source Breakdown Voltage	100	——	——	V	V_{GS} = 0V, I_D = 250μA
$\Delta V_{(BR)DSS}/\Delta T_J$	Breakdown Voltage Temp. Coefficient	——	0.077	——	V/°C	Reference to 25°C, I_D = 1mA
$R_{DS(on)}$	Static Drain-to-Source On-Resistance	——	11	14	mΩ	V_{GS} = 10V, I_D = 38A ③
		——	12	16		V_{GS} = 4.5V, I_D = 32A ③
$V_{GS(th)}$	Gate Threshold Voltage	1.0	——	2.5	V	V_{DS} = V_{GS}, I_D = 100μA
gfs	Forward Transconductance	52	——	——	S	V_{DS} = 25V, I_D = 38A
I_{DSS}	Drain-to-Source Leakage Current	——	——	20	μA	V_{DS} = 100V, V_{GS} = 0V
		——	——	250		V_{DS} = 100V, V_{GS} = 0V, T_J = 125°C
I_{GSS}	Gate-to-Source Forward Leakage	——	——	200	nA	V_{GS} = 16V
	Gate-to-Source Reverse Leakage	——	——	-200		V_{GS} = -16V
Q_g	Total Gate Charge	——	34	48		I_D = 38A
Q_{gs}	Gate-to-Source Charge	——	10	——	nC	V_{DS} = 50V
Q_{gd}	Gate-to-Drain ("Miller") Charge	——	15	——		V_{GS} = 4.5V ③
$t_{d(on)}$	Turn-On Delay Time	——	24	——		V_{DD} = 50V
t_r	Rise Time	——	110	——		I_D = 38A
$t_{d(off)}$	Turn-Off Delay Time	——	33	——	ns	R_G = 3.7Ω
t_f	Fall Time	——	48	——		V_{GS} = 4.5V ③
L_D	Internal Drain Inductance	——	4.5	——		Between lead,
					nH	6mm (0.25in.)
L_S	Internal Source Inductance	——	7.5	——		from package
						and center of die contact
C_{iss}	Input Capacitance	——	3980	——		V_{GS} = 0V
C_{oss}	Output Capacitance	——	310	——		V_{DS} = 25V
C_{rss}	Reverse Transfer Capacitance	——	130	——	pF	ƒ = 1.0MHz
C_{oss}	Output Capacitance	——	1820	——		V_{GS} = 0V, V_{DS} = 1.0V, ƒ = 1.0MHz
C_{oss}	Output Capacitance	——	170	——		V_{GS} = 0V, V_{DS} = 80V, ƒ = 1.0MHz
C_{oss} eff.	Effective Output Capacitance	——	320	——		V_{GS} = 0V, V_{DS} = 0V to 80V ④

Source-Drain Ratings and Characteristics

	Parameter	Min.	Typ.	Max.	Units	Conditions
I_S	Continuous Source Current	——	——	63		MOSFET symbol
	(Body Diode)				A	showing the
I_{SM}	Pulsed Source Current	——	——	250		integral reverse
	(Body Diode) ①					p-n junction diode.
V_{SD}	Diode Forward Voltage	——	——	1.3	V	T_J = 25°C, I_S = 38A, V_{GS} = 0V ③
t_{rr}	Reverse Recovery Time	——	34	51	ns	T_J = 25°C, I_F = 38A, V_{DD} = 50V
Q_{rr}	Reverse Recovery Charge	——	42	63	nC	di/dt = 100A/μs ③
t_{on}	Forward Turn-On Time	Intrinsic turn-on time is negligible (turn-on is dominated by LS+LD)				

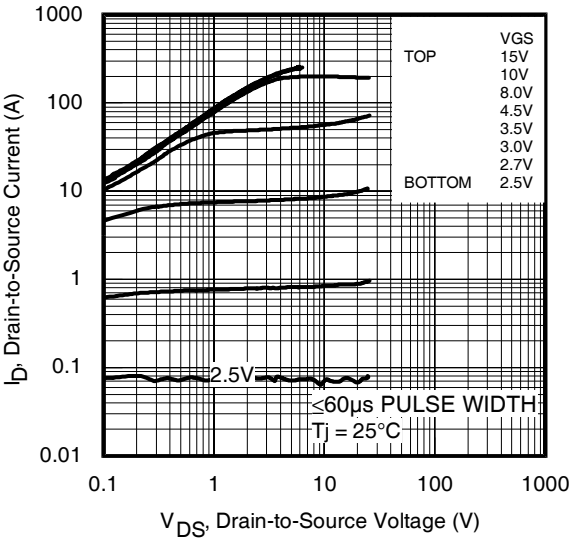

Fig 1. Typical Output Characteristics

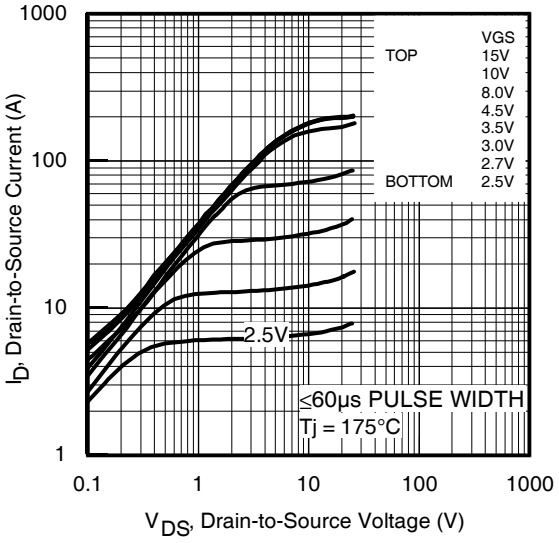

Fig 2. Typical Output Characteristics

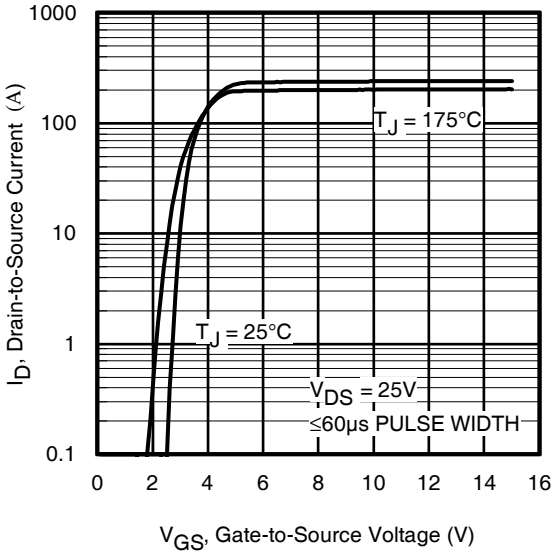

Fig 3. Typical Transfer Characteristics

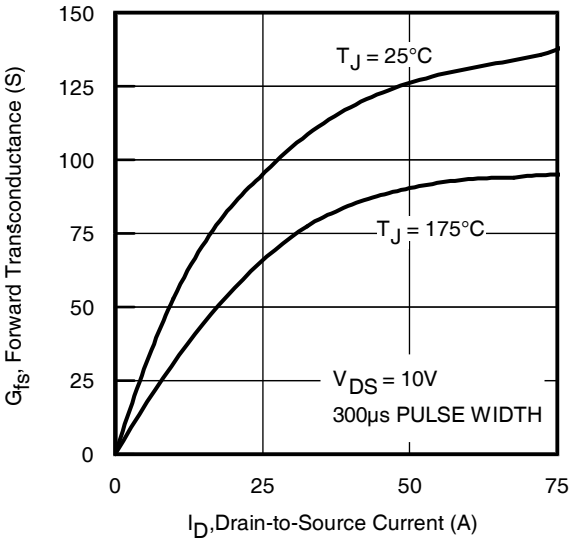

Fig 4. Typical Forward Transconductance vs. Drain Current

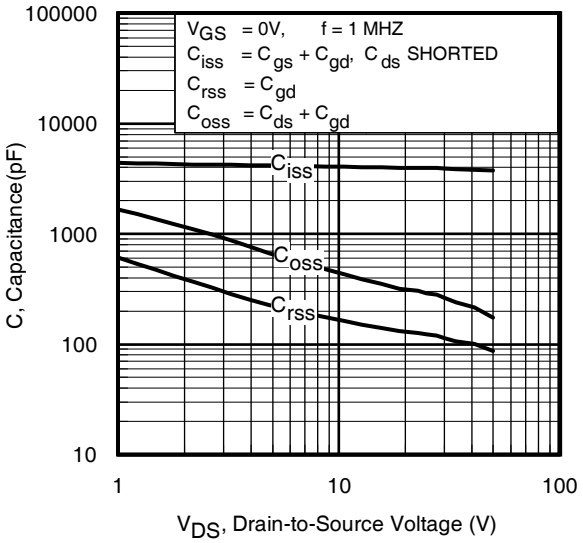

Fig 5. Typical Capacitance vs. Drain-to-Source Voltage

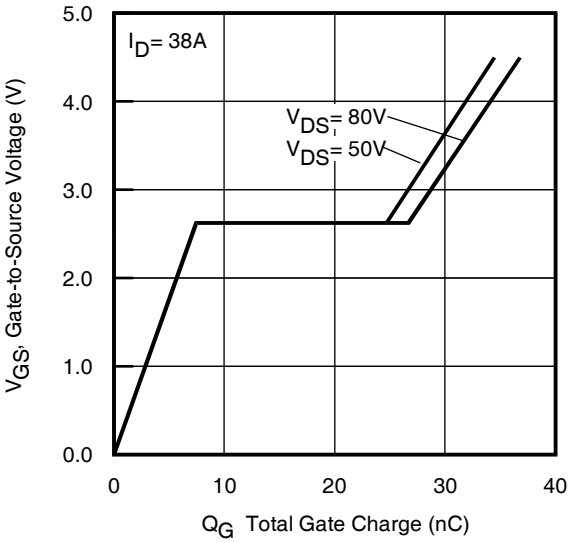

Fig 6. Typical Gate Charge vs. Gate-to-Source Voltage

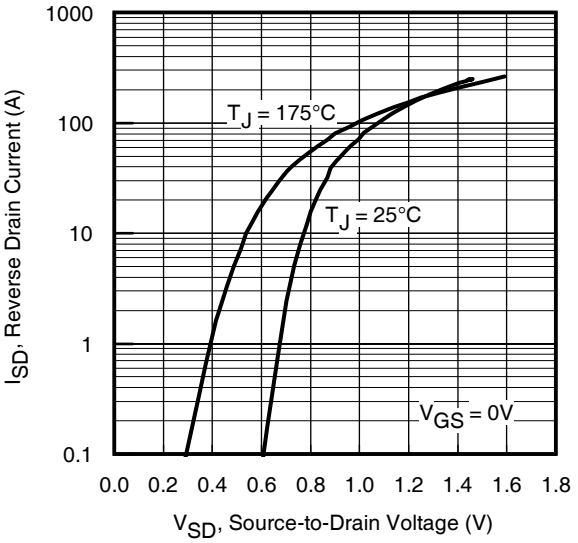

Fig 7. Typical Source-Drain Diode Forward Voltage

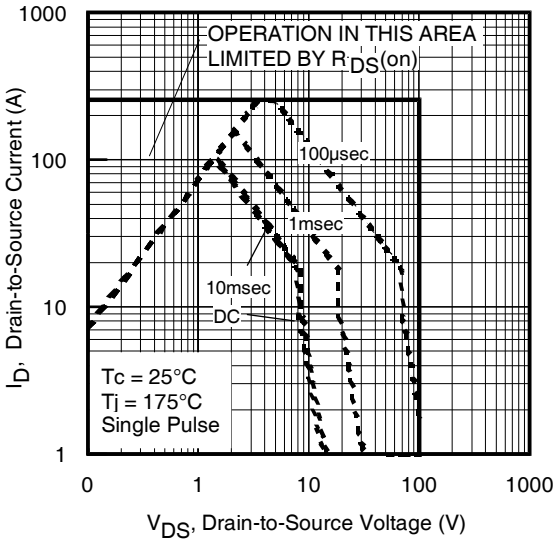

Fig 8. Maximum Safe Operating Area

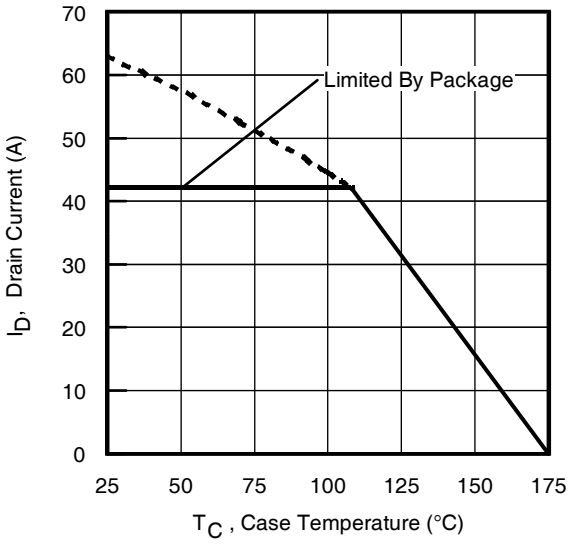

Fig 9. Maximum Drain Current vs. Case Temperature

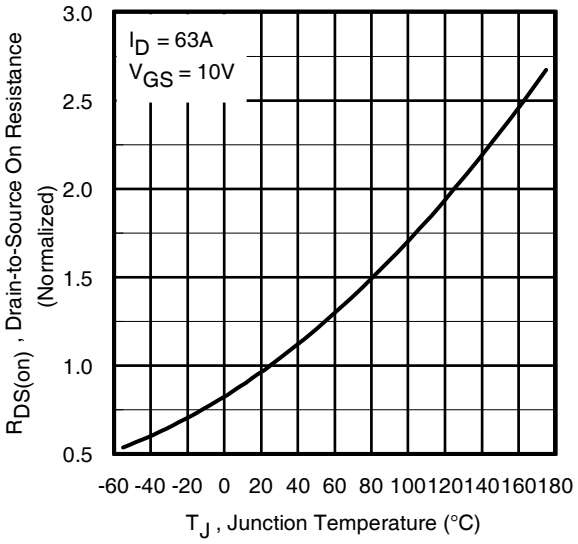

Fig 10. Normalized On-Resistance vs. Temperature

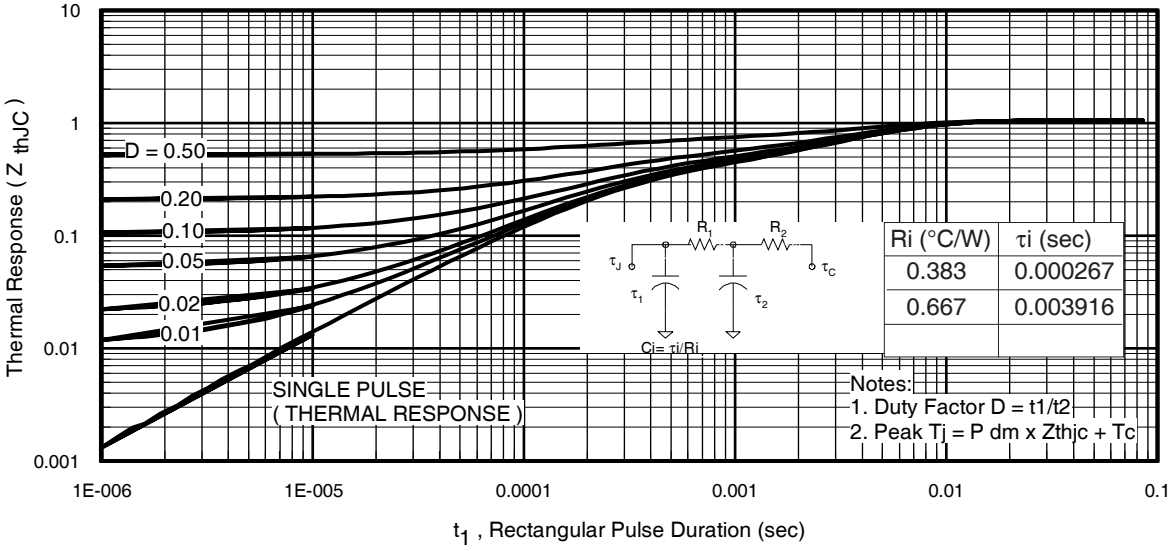

Fig 11. Maximum Effective Transient Thermal Impedance, Junction-to-Case

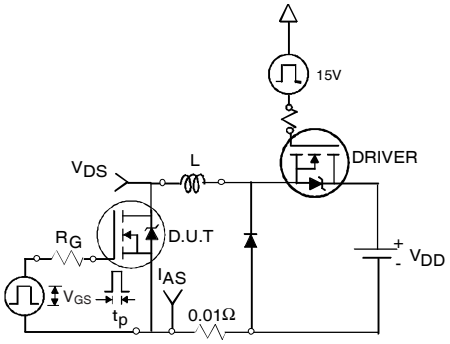

Fig 12a. Unclamped Inductive Test Circuit

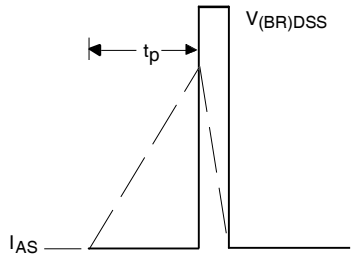

Fig 12b. Unclamped Inductive Waveforms

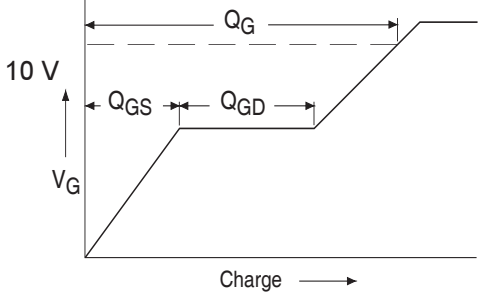

Fig 13a. Basic Gate Charge Waveform

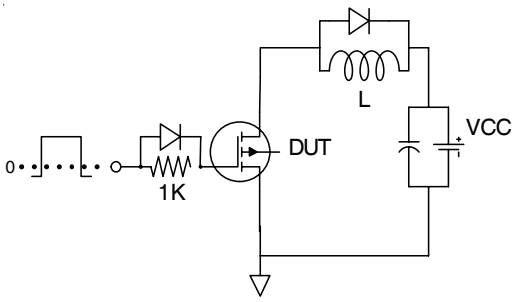

Fig 13b. Gate Charge Test Circuit

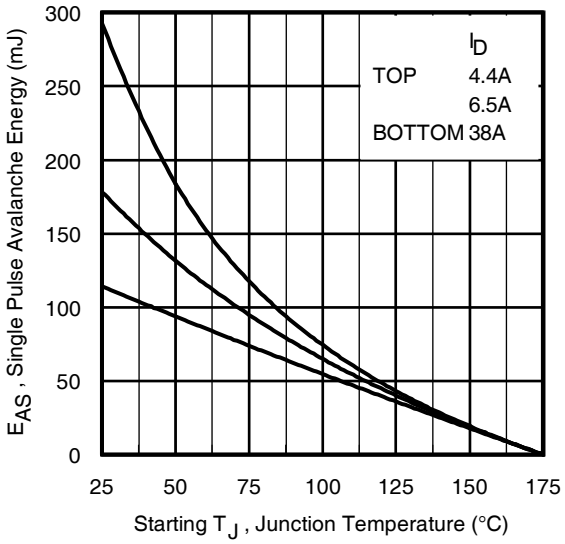

Fig 12c. Maximum Avalanche Energy vs. Drain Current

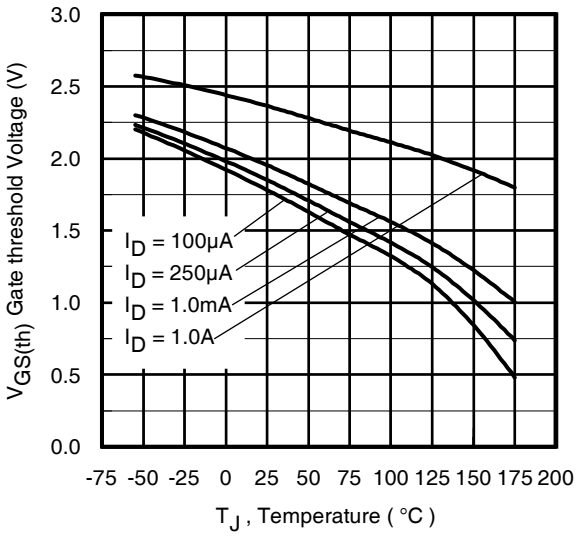

Fig 14. Threshold Voltage vs. Temperature

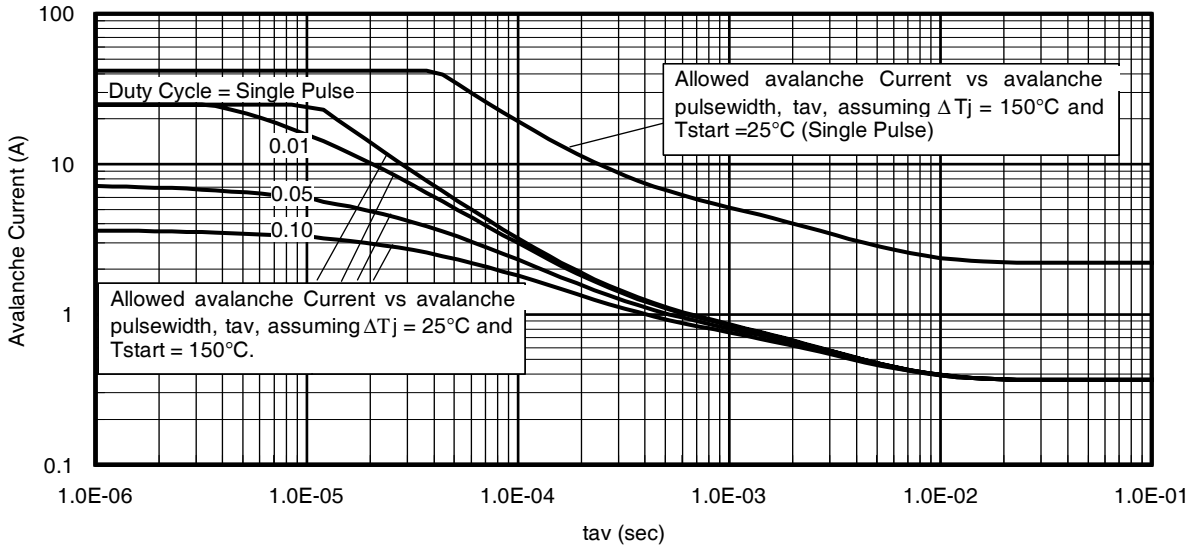

Fig 15. Typical Avalanche Current vs.Pulsewidth

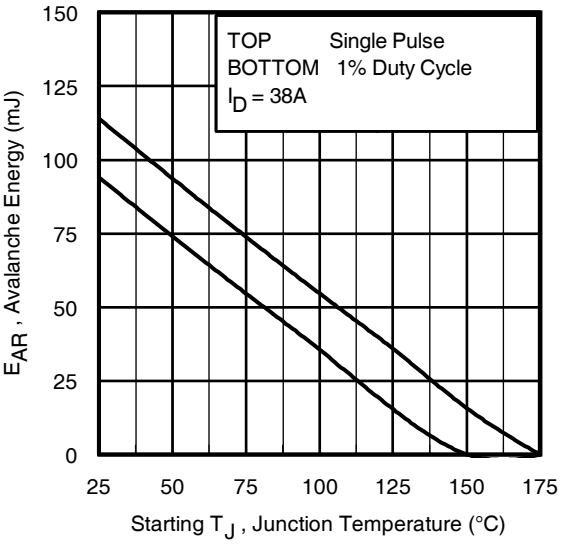

Fig 16. Maximum Avalanche Energy vs. Temperature

Notes on Repetitive Avalanche Curves , Figures 15, 16:
(For further info, see AN-1005 at www.irf.com)

1. Avalanche failures assumption:
   Purely a thermal phenomenon and failure occurs at a temperature far in excess of T_{jmax}. This is validated for every part type.
2. Safe operation in Avalanche is allowed as long as neither Tjmax nor Iav (max) is exceeded.
3. Equation below based on circuit and waveforms shown in Figures 12a, 12b.
4. $P_{D\ (ave)}$ = Average power dissipation per single avalanche pulse.
5. BV = Rated breakdown voltage (1.3 factor accounts for voltage increase during avalanche).
6. I_{av} = Allowable avalanche current.
7. ΔT = Allowable rise in junction temperature, not to exceed T_{jmax} (assumed as 25°C in Figure 15, 16).
   t_{av} = Average time in avalanche.
   D = Duty cycle in avalanche = $t_{av} \cdot f$
   $Z_{thJC}(D, t_{av})$ = Transient thermal resistance, see figure 11)

$$P_{D\ (ave)} = 1/2\ (1.3 \cdot BV \cdot I_{av}) = \Delta T / Z_{thJC}$$
$$I_{av} = 2\Delta T / [1.3 \cdot BV \cdot Z_{th}]$$
$$E_{AS\ (AR)} = P_{D\ (ave)} \cdot t_{av}$$

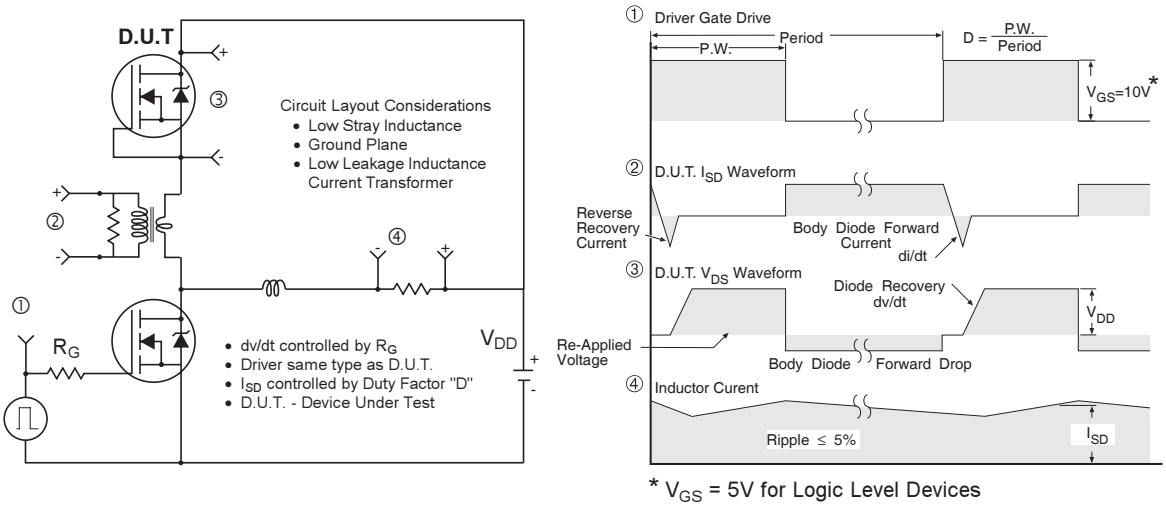

Fig 17. Peak Diode Recovery dv/dt Test Circuit for N-Channel HEXFET® Power MOSFETs

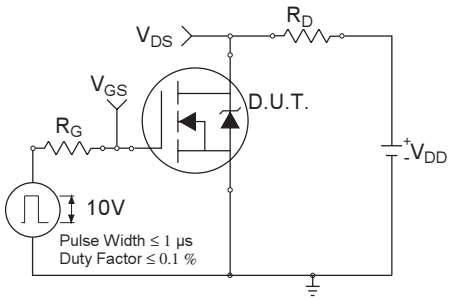

Fig 18a. Switching Time Test Circuit

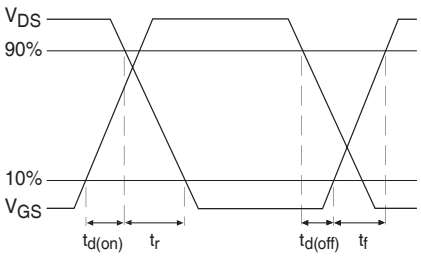

Fig 18b. Switching Time Waveforms

D-Pak (TO-252AA) Package Outline

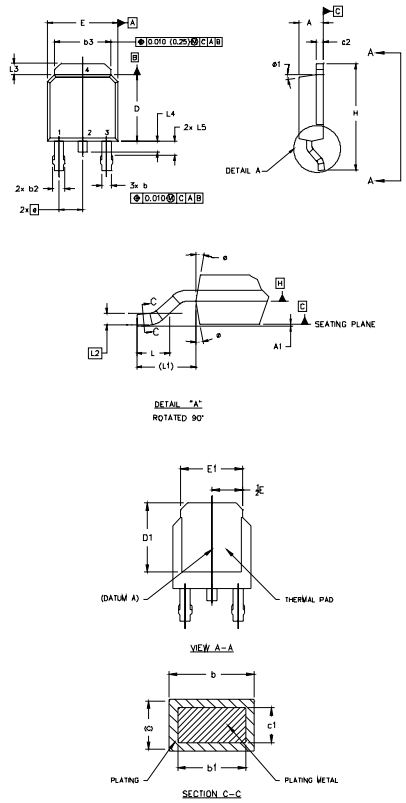

NOTES:

1.0 DIMENSIONING AND TOLERANCING PER ASME Y14.5 M- 1994.
2.0 DIMENSIONS ARE SHOWN IN INCHES [MILLIMETERS].
3.0 LEAD DIMENSION UNCONTROLLED IN L5
4.0 DIMENSION D1 AND E1 ESTABLISH A MINIMUM MOUNTING SURFACE FOR THERMAL PAD.
5.0 SECTION C-C DIMENSIONS APPLY TO THE FLAT SECTION OF THE LEAD BETWEEN .005 [0.127] AND .010 [0.2540 FROM THE LEAD TIP.
6.0 DIMENSION D & E DO NOT INCLUDE MOLD FLASH. MOLD FLASH SHALL NOT EXCEED .005" (0.127) PER SIDE. THESE DIMENSIONS ARE MEASURED AT THE OUTERMOST EXTREMES OF THE PLASTIC BODY.
7.0 OUTLINE CONFORMS TO JEDEC OUTLINE TO-252AA.

SYMBOL	DIMENSIONS				NOTES
	MILLIMETERS		INCHES		
	MIN.	MAX.	MIN.	MAX.	
A	2.18	2.39	.086	.094	
A1		0.13		.005	
b	0.64	0.89	.025	.035	5
b1	0.64	0.79	.025	0.031	5
b2	0.76	1.14	.030	.045	
b3	4.95	5.46	.195	.215	
c	0.46	0.61	.018	.024	5
c1	0.41	0.56	.016	.022	5
c2	.046	0.89	.018	.035	5
D	5.97	6.22	.235	.245	6
D1	5.21	-	.205	-	4
E	6.35	6.73	.250	.265	6
E1	4.32	-	.170		4
e	2.29		.090 BSC		
H	9.40	10.41	.370	.410	
L	1.40	1.78	.055	.070	
L1	2.74 REF.		.108 REF.		
L2	0.051 BSC		.020 BSC		
L3	0.89	1.27	.035	.050	
L4		1.02		.040	
L5	1.14	1.52	.045	.060	3
ø	0°	10°	0°	10°	
ø1	0°	15°	0°	15°	

LEAD ASSIGNMENTS

HEXFET

1.- GATE
2.- DRAIN
3.- SOURCE
4.- DRAIN

IGBTs, CoPACK

1.- GATE
2.- COLLECTOR
3.- EMITTER
4.- COLLECTOR

D-Pak (TO-252AA) Part Marking Information

EXAMPLE: THIS IS AN IRFR120
WITH ASSEMBLY
LOT CODE 1234
ASSEMBLED ON WW 16, 2001
IN THE ASSEMBLY LINE 'A'

Note: 'P' in assembly line position indicates 'Lead-Free'

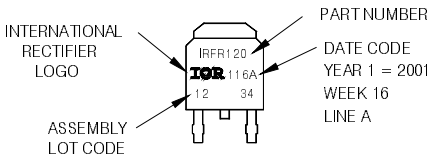

OR

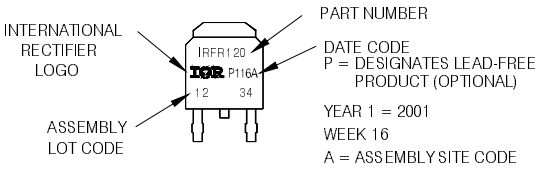

Note: For the most current drawing please refer to IR website at http://www.irf.com/package/

I-Pak (TO-251AA) Package Outline

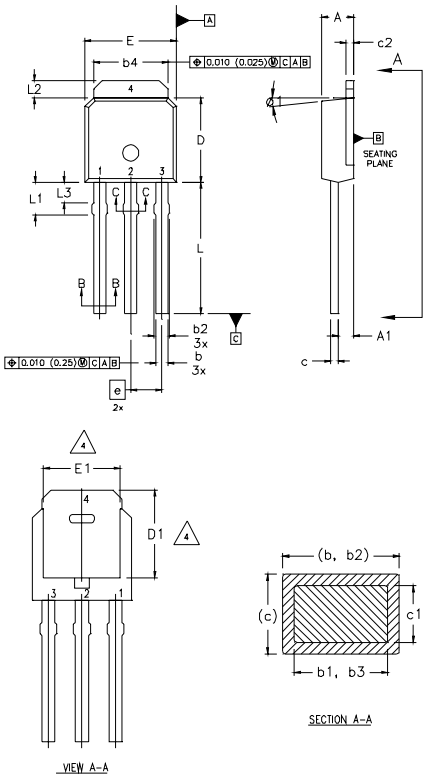

NOTES:

1 DIMENSIONING AND TOLERANCING PER ASME Y14.5 M- 1994.
2 DIMENSIONS ARE SHOWN IN MILLIMETERS [INCHES].
3 DIMENSION D & E DO NOT INCLUDE MOLD FLASH. MOLD FLASH SHALL NOT EXCEED 0.005" (0.127) PER SIDE. THESE DIMENSIONS ARE MEASURED AT THE OUTERMOST EXTREMES OF THE PLASTIC BODY.
4 THERMAL PAD CONTOUR OPTION WITHIN DIMENSION b4, L2, E1 & D1.
5 LEAD DIMENSION UNCONTROLLED IN L3.
6 DIMENSION b1, b3 APPLY TO BASE METAL ONLY.
7 OUTLINE CONFORMS TO JEDEC OUTLINE TO-251AA.
8 CONTROLLING DIMENSION : INCHES.

SYMBOL	DIMENSIONS				NOTES
	MILLIMETERS		INCHES		
	MIN.	MAX.	MIN.	MAX.	
A	2.18	2.39	0.086	.094	
A1	0.89	1.14	0.035	0.045	
b	0.64	0.89	0.025	0.035	
b1	0.64	0.79	0.025	0.031	4
b2	0.76	1.14	0.030	0.045	
b3	0.76	1.04	0.030	0.041	
b4	5.00	5.46	0.195	0.215	4
c	0.46	0.61	0.018	0.024	
c1	0.41	0.56	0.016	0.022	
c2	.046	0.86	0.018	0.035	
D	5.97	6.22	0.235	0.245	3, 4
D1	5.21	–	0.205	–	4
E	6.35	6.73	0.250	0.265	3, 4
E1	4.32	–	0.170	–	4
e	2.29		0.090 BSC		
L	8.89	9.60	0.350	0.380	
L1	1.91	2.29	0.075	0.090	
L2	0.89	1.27	0.035	0.050	4
L3	1.14	1.52	0.045	0.060	5
ø1	0°	15°	0°	15°	

LEAD ASSIGNMENTS

HEXFET

1.- GATE
2.- DRAIN
3.- SOURCE
4.- DRAIN

I-Pak (TO-251AA) Part Marking Information

EXAMPLE: THIS IS AN IRFU120
WITH ASSEMBLY
LOT CODE 5678
ASSEMBLED ON WW 19, 2001
IN THE ASSEMBLY LINE "A"

Note: "P" in assembly line position indicates Lead-Free"

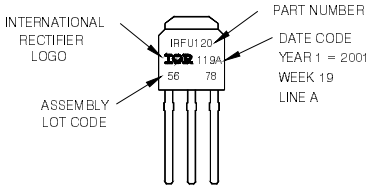

OR

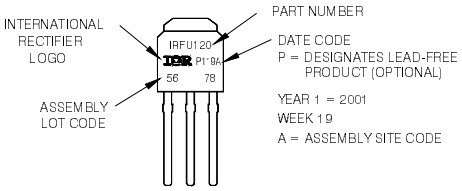

Note: For the most current drawing please refer to IR website at http://www.irf.com/package/

D-Pak (TO-252AA) Tape & Reel Information

Dimensions are shown in millimeters (inches)

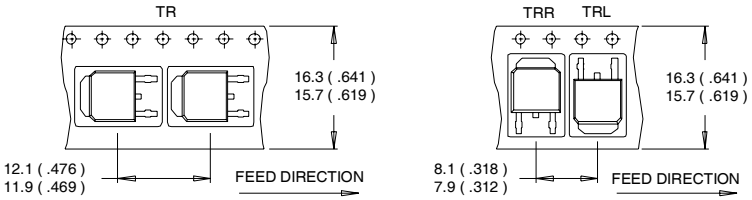

NOTES :
1. CONTROLLING DIMENSION : MILLIMETER.
2. ALL DIMENSIONS ARE SHOWN IN MILLIMETERS (INCHES).
3. OUTLINE CONFORMS TO EIA-481 & EIA-541.

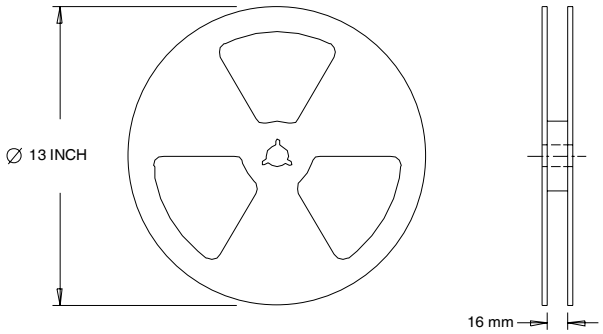

NOTES :
1. OUTLINE CONFORMS TO EIA-481.

Notes:

① Repetitive rating; pulse width limited by max. junction temperature. (See fig. 11).

② Limited by T_{Jmax}, starting T_J = 25°C, L = 0.16mH R_G = 25Ω, I_{AS} = 38A, V_{GS} =10V. Part not recommended for use above this value.

③ Pulse width ≤ 1.0ms; duty cycle ≤ 2%.

④ C_{oss} eff. is a fixed capacitance that gives the same charging time as C_{oss} while V_{DS} is rising from 0 to 80% V_{DSS} .

⑤ Limited by T_{Jmax} , see Fig.12a, 12b, 15, 16 for typical repetitive avalanche performance.

⑥ This value determined from sample failure population. 100% tested to this value in production.

⑦ When mounted on 1" square PCB (FR-4 or G-10 Material).

⑧ R_θ is measured at T_J approximately 90°C.

Data and specifications subject to change without notice.
This product has been designed for the Industrial market.
Qualification Standards can be found on IR's Web site.

International
IOR Rectifier

IR WORLD HEADQUARTERS: 233 Kansas St., El Segundo, California 90245, USA Tel: (310) 252-7105
TAC Fax: (310) 252-7903
Visit us at www.irf.com for sales contact information.11/09

Looking for pricing, stock, or lifecycle information?

Click below to explore more details on WIN SOURCE:

- View IRLU3110ZPBF on WIN SOURCE
- Infineon Technologies Information

Optimize Your Supply Chain with WIN SOURCE Solutions

- Global Sourcing Solution
- Obsolete Management
- Cost Control Management
- Shortage Management
- Alternative Solution
- Excess Inventory Management