ispLSI® 5512VE

In-System Programmable 3.3V SuperWIDE™ High Density PLD

Features

- **Second Generation SuperWIDE HIGH DENSITY IN-SYSTEM PROGRAMMABLE LOGIC DEVICE**
  - **3.3V Power Supply**
  - **User Selectable 3.3V/2.5V I/O**
  - **24000 PLD Gates / 512 Macrocells**
  - **Up to 256 I/O Pins**
  - **512 Registers**
  - **High-Speed Global Interconnect**
  - **SuperWIDE Generic Logic Block (32 Macrocells) for Optimum Performance**
  - **SuperWIDE Input Gating (68 Inputs) for Fast Counters, State Machines, Address Decoders, etc.**
  - **PCB Efficient Ball Grid Array (BGA) Package Options**
  - **Interfaces with Standard 5V TTL Devices**
- **HIGH PERFORMANCE E²CMOS® TECHNOLOGY**
  - **f_{max} = 155 MHz Maximum Operating Frequency**
  - **t_{pd} = 6.5 ns Propagation Delay**
  - **TTL/3.3V/2.5V Compatible Input Thresholds and Output Levels**
  - **Electrically Erasable and Reprogrammable**
  - **Non-Volatile**
  - **Programmable Speed/Power Logic Path Optimization**
- **IN-SYSTEM PROGRAMMABLE**
  - **Increased Manufacturing Yields, Reduced Time-to-Market, and Improved Product Quality**
  - **Reprogram Soldered Devices for Faster Debugging**
- **100% IEEE 1149.1 BOUNDARY SCAN TESTABLE AND 3.3V IN-SYSTEM PROGRAMMABLE**
- **ARCHITECTURE FEATURES**
  - **Enhanced Pin-Locking Architecture with Single-Level Global Routing Pool and SuperWIDE GLBs**
  - **Wrap Around Product Term Sharing Array Supports up to 35 Product Terms Per Macrocell**
  - **Macrocells Support Concurrent Combinatorial and Registered Functions**
  - **Macrocell Registers Feature Multiple Control Options Including Set, Reset and Clock Enable**
  - **Four Dedicated Clock Input Pins Plus Macrocell Product Term Clocks**
  - **Programmable I/O Supports Programmable Bus Hold, Pull-up, Open Drain and Slew Rate Options**
  - **Four Global Product Term Output Enables, Two Global OE Pins and One Product Term OE per Macrocell**

Functional Block Diagram

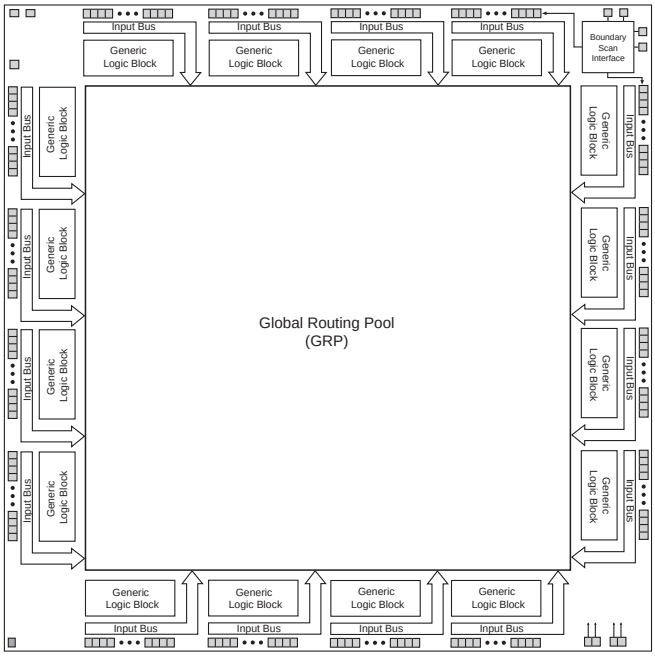

ispLSI 5000VE Description

The ispLSI 5000VE Family of In-System Programmable High Density Logic Devices is based on Generic Logic Blocks (GLBs) of 32 registered macrocells and a single Global Routing Pool (GRP) structure interconnecting the GLBs.

Outputs from the GLBs drive the Global Routing Pool (GRP) between the GLBs. Switching resources are provided to allow signals in the Global Routing Pool to drive any or all the GLBs in the device. This mechanism allows fast, efficient connections across the entire device.

Each GLB contains 32 macrocells and a fully populated, programmable AND-array with 160 logic product terms and three extra control product terms. The GLB has 68 inputs from the Global Routing Pool which are available in both true and complement form for every product term. The 160 product terms are grouped in 32 sets of five and sent into a Product Term Sharing Array (PTSA) which allows sharing up to a maximum of 35 product terms for a single function. Alternatively, the PTSA can be bypassed for functions of five product terms or less. The three extra product terms are used for shared controls: reset, clock, clock enable and output enable.

Copyright © 2002 Lattice Semiconductor Corp. All brand or product names are trademarks or registered trademarks of their respective holders. The specifications and information herein are subject to change without notice.

LATTICE SEMICONDUCTOR CORP., 5555 Northeast Moore Ct., Hillsboro, Oregon 97124, U.S.A.
Tel. (503) 268-8000; 1-800-LATTICE; FAX (503) 268-8556; http://www.latticesemi.com

January 2002

Functional Block Diagram

Figure 1. ispLSI 5512VE Functional Block Diagram (256-I/O Option)

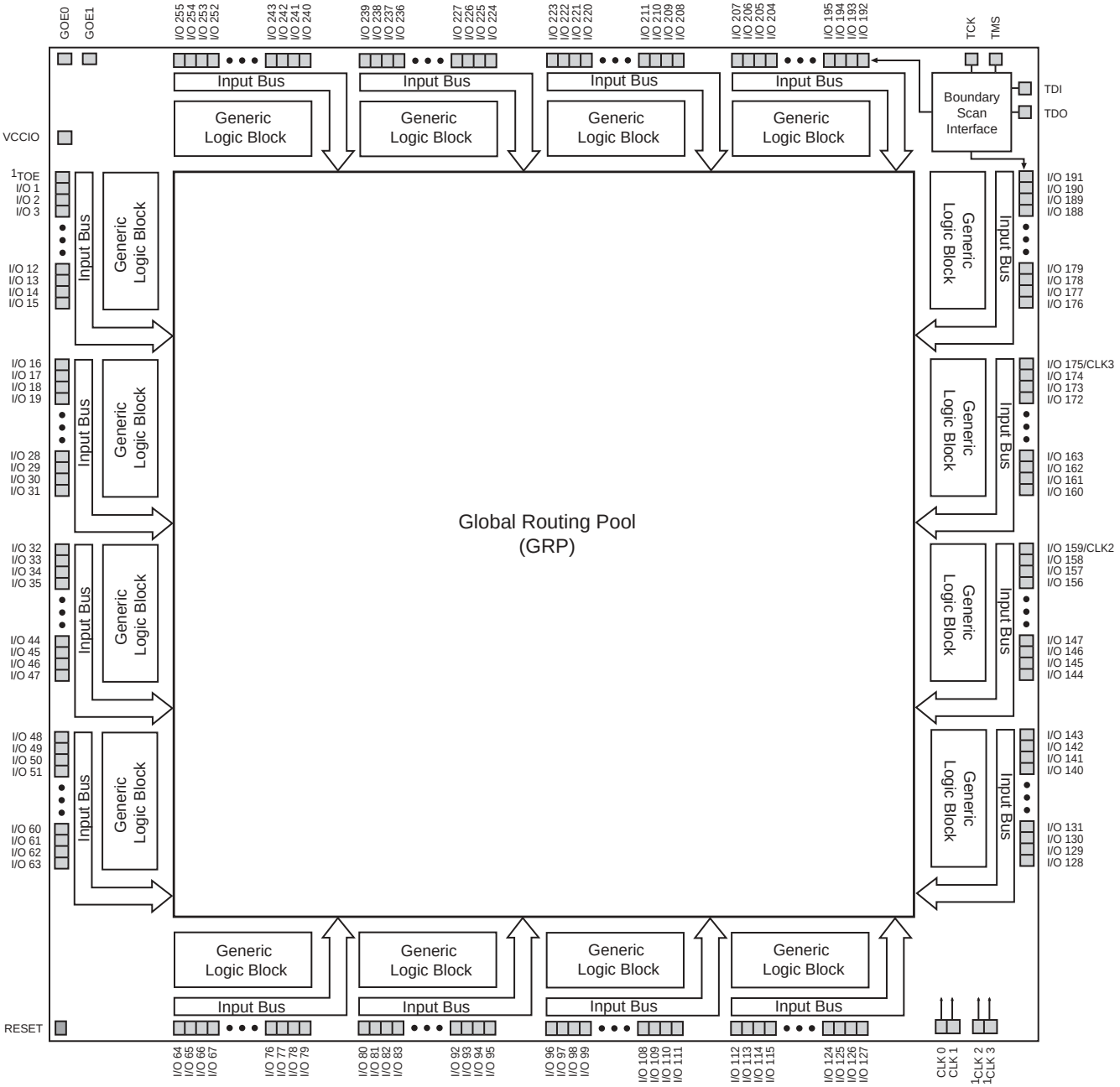

1. CLK2, CLK3 and TOE signals are multiplexed with I/O signals. Use the table below to determine which I/O is shared by package type.

Package Type	Multiplexed Signals		
256 fpBGA	I/O 119 / CLK2	I/O 131 / CLK3	I/O 0 / TOE
272 BGA	I/O 119 / CLK2	I/O 131 / CLK 3	I/O 0 / TOE
388 fpBGA	I/O 179 / CLK2	I/O 197 / CLK 3	I/O 0 / TOE
388 BGA	I/O 179 / CLK2	I/O 197 / CLK 3	I/O 0 / TOE

ispLSI 5000VE Description (Continued)

The 32 registered macrocells in the GLB are driven by the 32 outputs from the PTSA or the PTSA bypass. Each macrocell contains a programmable XOR gate, a programmable register/latch and the necessary clocks and control logic to allow combinatorial or registered operation. The macrocells each have two outputs, combinatorial and registered. This dual output capability from the macrocell allows efficient use of the hardware resources. One output can be a registered function for example, while the other output can be an unrelated combinatorial function. A direct register input from the I/O pad facilitates efficient use of this feature to construct high-speed input registers.

Macrocell registers can be clocked from one of several global or product term clocks available on the device. A global and product term clock enable is also available to each register, eliminating the need to gate the clock to the macrocell registers. Reset for the macrocell register is provided from the global signal, its polarity is user-selectable. The macrocell register can be programmed to operate as a D-type register or a D-type latch.

The 32 outputs from the GLB can drive both the Global Routing Pool and the device I/O cells. The Global Routing Pool contains one input from each macrocell output and one input from each I/O pin.

The input buffer threshold has programmable TTL/3.3V/2.5V compatible levels. The output driver can source 4mA and sink 8mA in 3.3V mode. The output drivers have a separate VCCIO reference input which is independent of the main VCC supply for the device. This feature allows individual output drivers to drive either 3.3V (from the device VCC) or 2.5V (from the VCCIO pin) output levels while the device logic and the output current drive are powered from device supply (VCC). The output drivers also provide individually programmable edge rates and open drain capability. A programmable pullup resistor is provided to tie off unused inputs. Additionally, a programmable bus-hold latch is available to hold tristate outputs in their last valid state until the bus is driven again by some device.

The ispLSI 5000VE Family features 3.3V, non-volatile in-system programmability for both the logic and the interconnect structures, providing the means to develop truly reconfigurable systems. Programming is achieved through the industry standard IEEE 1149.1-compliant Boundary Scan interface. Boundary Scan test is also supported through the same interface.

An enhanced, multiple cell security scheme is provided that prevents reading of the JEDEC programming file when secured. After the device has been secured using this mechanism, the only way to clear the security is to execute a bulk-erase instruction.

ispLSI 5000VE Family Members

The ispLSI 5000VE Family ranges from 128 macrocells to 512 macrocells and operates from a 3.3V power supply. All family members will be available with multiple package options. The ispLSI 5000VE Family device matrix showing the various bondout options is shown in the table below.

The interconnect structure (GRP) is very similar to Lattice's existing ispLSI 1000, 2000 and 3000 families, but with an enhanced interconnect structure for optimal pin locking and logic routing. This eliminates the need for registered I/O cells or an Output Routing Pool.

The ispLSI 5000VE encompasses the innovative features of the ispLSI 5000VA family with several enhancements. The macrocell is optimized and the T-type flip flop option is removed. To improve the efficiency of design fits, the Product Term Reset Logic is simplified and the polarity option as well as the Global Preset function are removed. The programmable output-delay feature (skew option) is also removed. As a result, the ispLSI 5000VE is not JEDEC compatible with the ispLSI 5000VA. ispLSI 5000VA and 5000VE pinouts may differ in the same package, however all programming and power/ground pins are located in the same locations.

Table 1. ispLSI 5000VE Family

			Package Type					
Device	**GLBs**	**Macrocells**	**100 TQFP**	**128 TQFP**	**256 fpBGA**	**272 BGA**	**388 fpBGA**	**388 BGA**
ispLSI 5128VE	4	128	—	96 I/O	—	—	—	—
ispLSI 5256VE	8	256	72 I/O	96 I/O	144 I/O	144 I/O	—	—
ispLSI 5384VE	12	384	—	—	192 I/O	192 I/O	—	—
ispLSI 5512VE	16	512	—	—	192 I/O	192 I/O	256 I/O	256 I/O

Figure 2. ispLSI 5512VE Block Diagram (256 I/O Version)

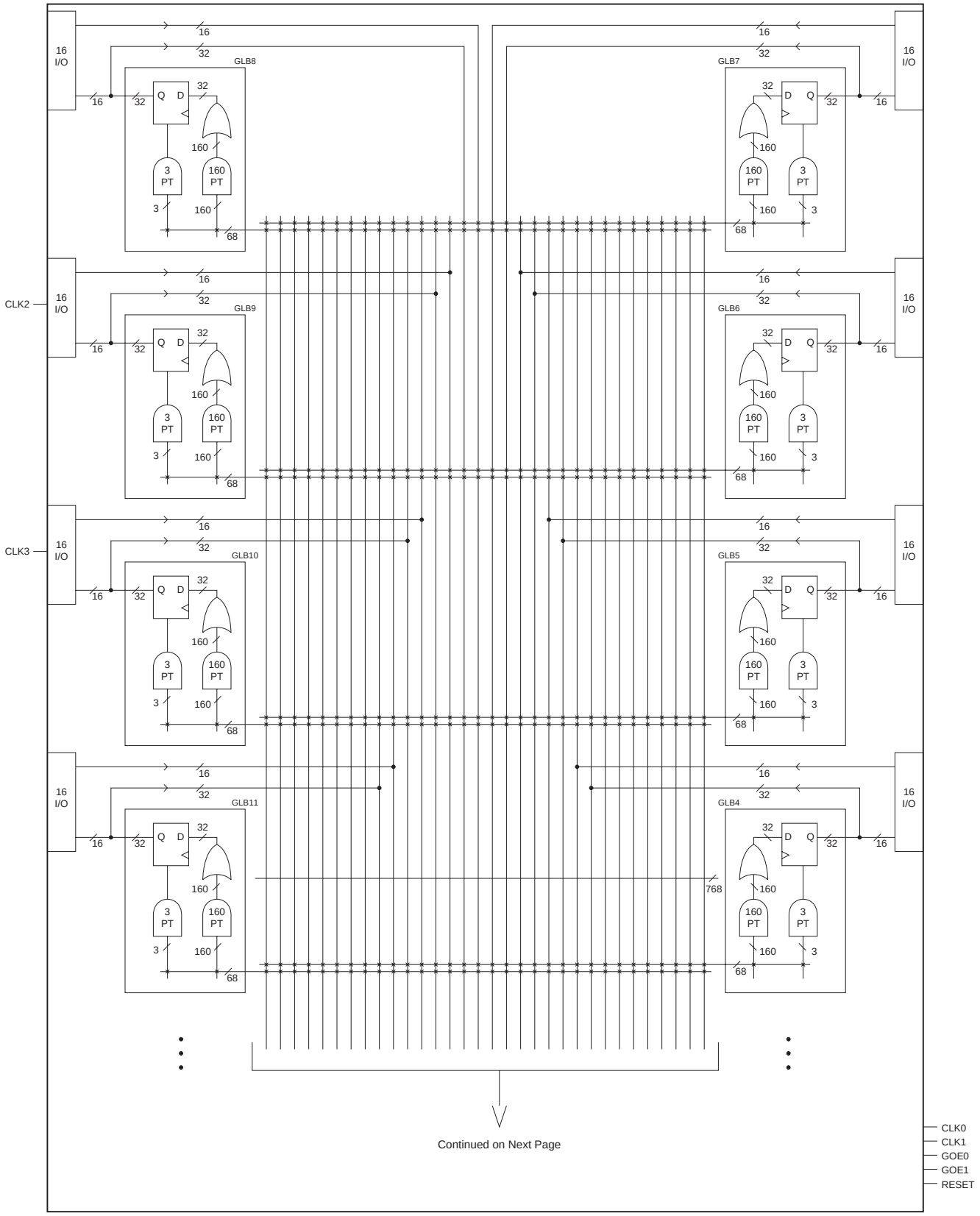

Figure 2. ispLSI 5512VE Block Diagram (256 I/O Version) -- Continued

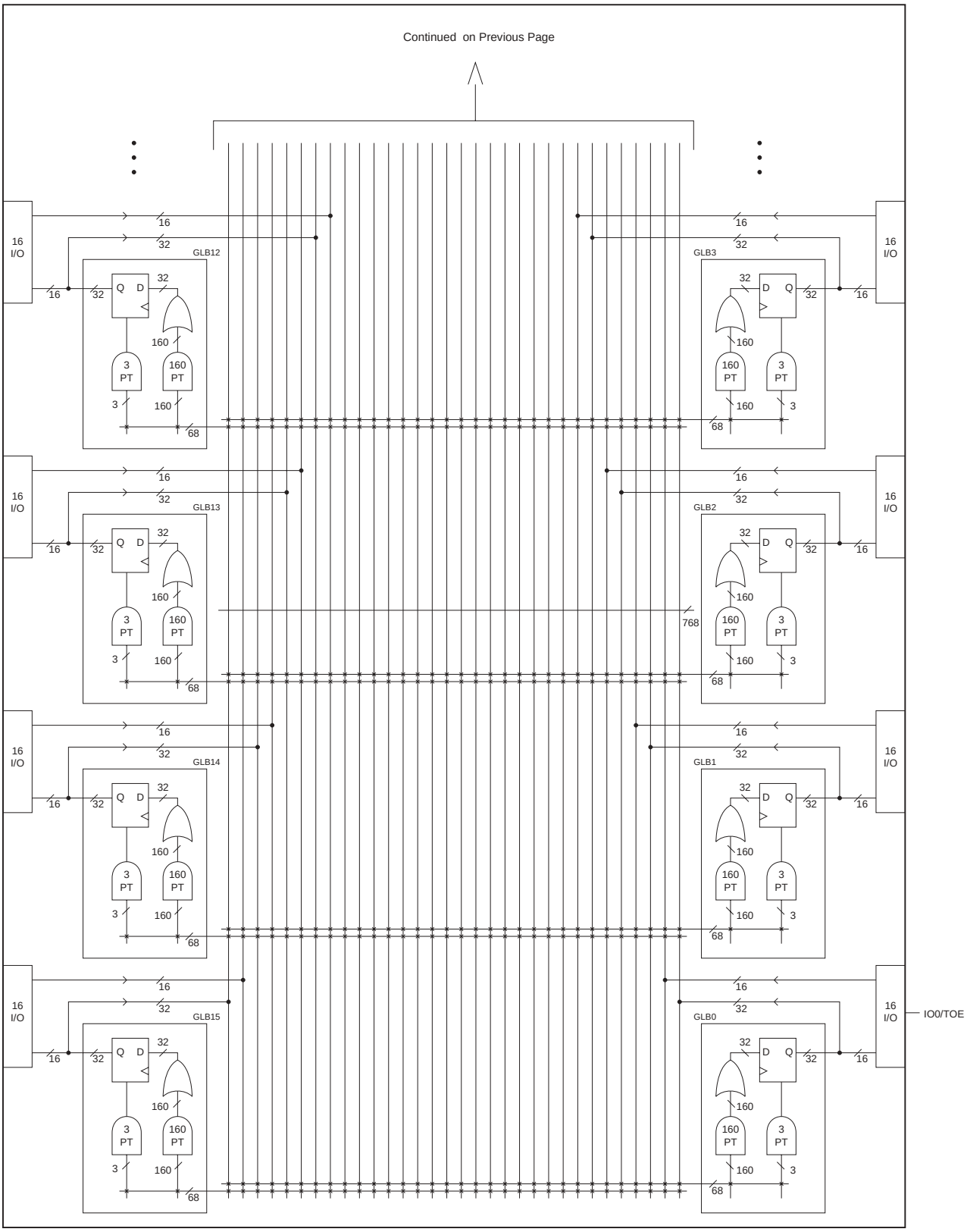

Figure 3. ispLSI 5000VE Generic Logic Block (GLB)

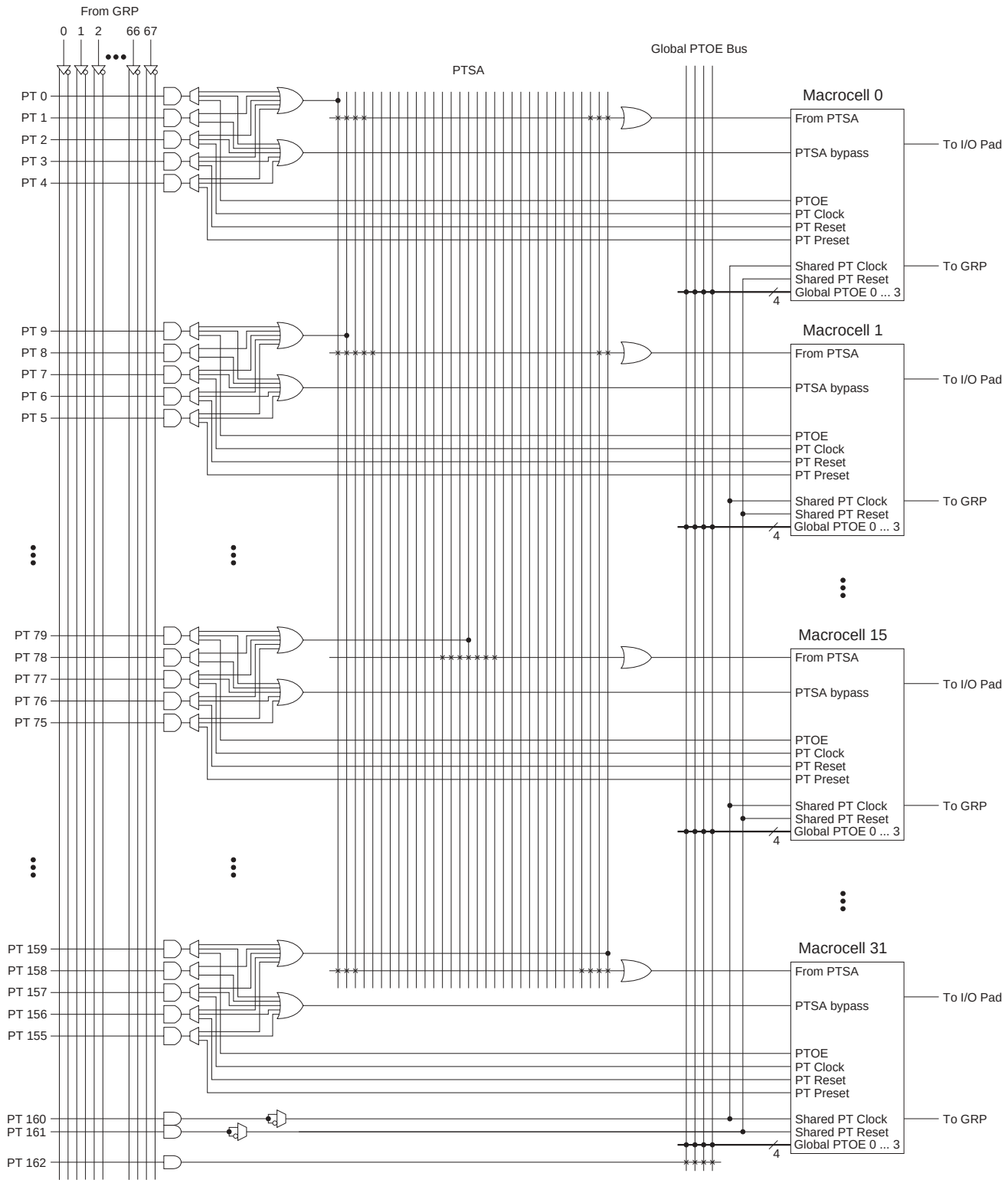

Figure 4. ispLSI 5000VE Macrocell

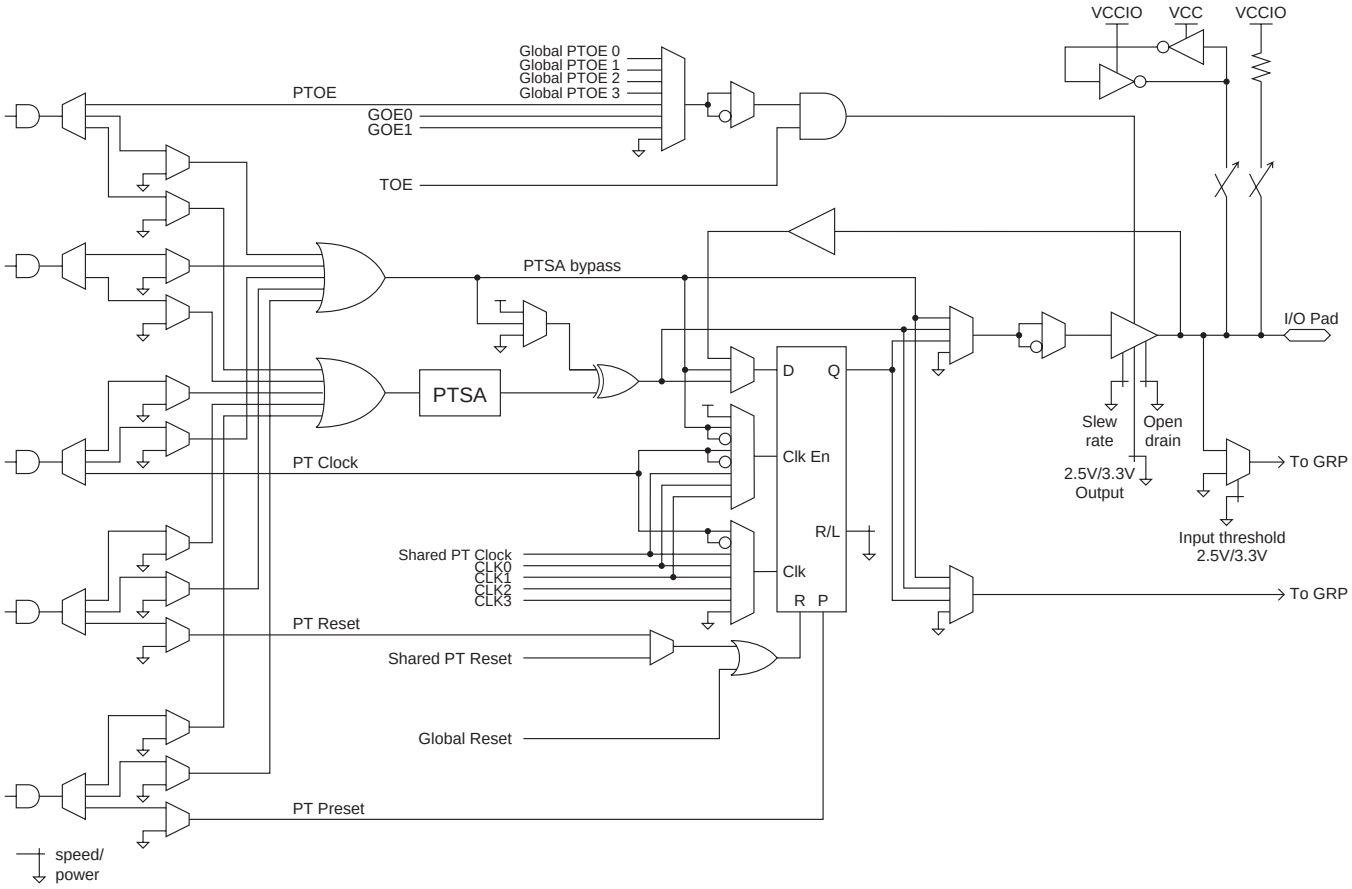

Note: Not all macrocells have I/O pads.

Global Clock Distribution

The ispLSI 5000VE Family has four dedicated clock input pins: CLK0 - CLK3. CLK0 input is used as the dedicated master clock that has the lowest internal clock skew with no clock inversion to maintain the fastest internal clock speed. The clock inversion is available on the remaining CLK1 - CLK3 signals. By sharing the pins with the I/O pins, CLK2 and CLK3 can not only be inverted but are also available for logic implementation through GRP signal routing. Figure 5 shows these different clock distribution options.

Figure 5. ispLSI 5000VE Global Clock Structure

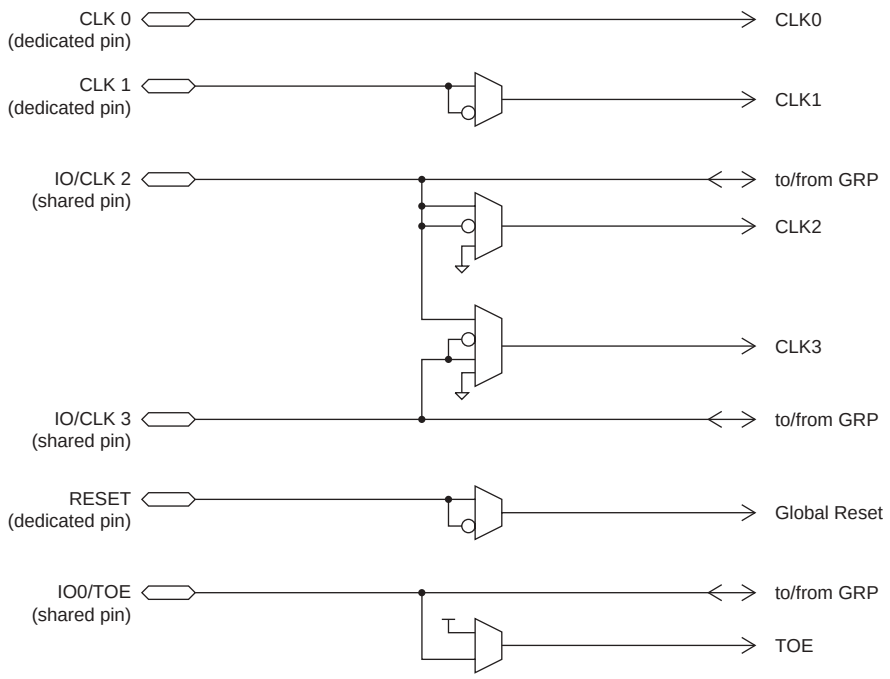

Figure 6. Boundary Scan Register Circuit for I/O Pins

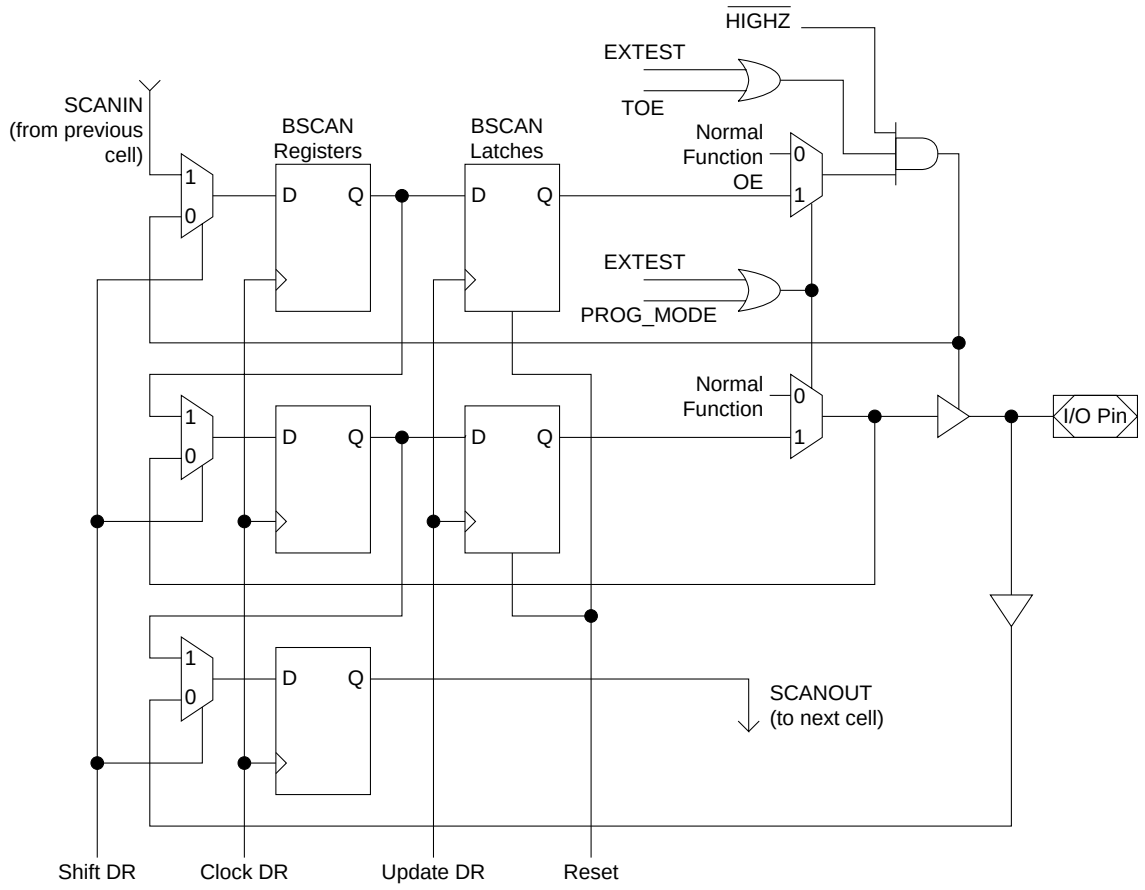

Figure 7. Boundary Scan Register Circuit for Input-Only Pins

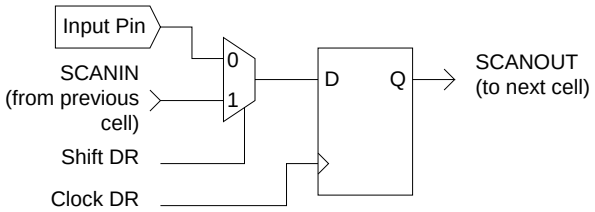

Figure 8. Boundary Scan Waveforms and Timing Specifications

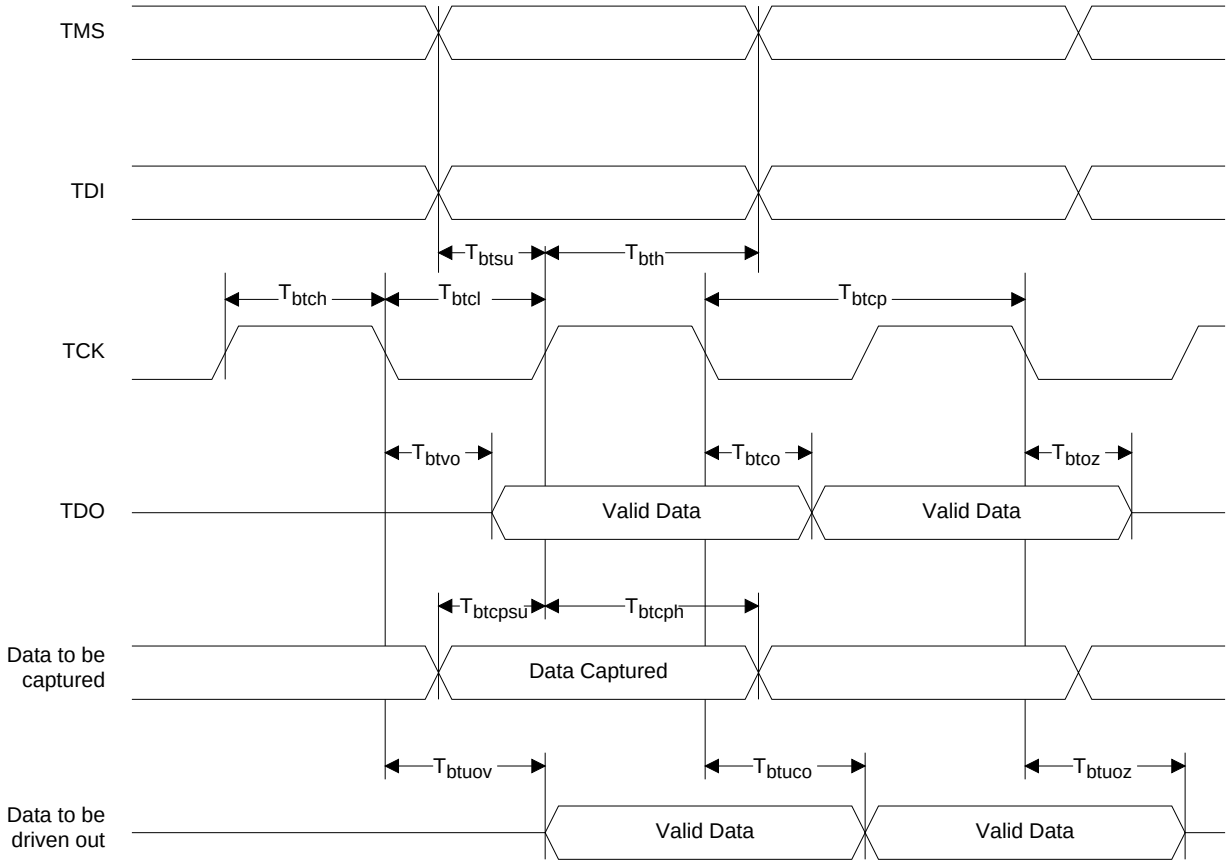

SYMBOL	PARAMETER	MIN	MAX	UNITS
t_{btcp}	TCK [BSCAN test] clock pulse width	125	–	ns
t_{btch}	TCK [BSCAN test] pulse width high	62.5	–	ns
t_{btcl}	TCK [BSCAN test] pulse width low	62.5	–	ns
t_{btsu}	TCK [BSCAN test] setup time	25	–	ns
t_{bth}	TCK [BSCAN test] hold time	25	–	ns
t_{rf}	TCK [BSCAN test] rise and fall time	50	–	mV/ns
t_{btco}	TAP controller falling edge of clock to valid output	–	25	ns
t_{btoz}	TAP controller falling edge of clock to data output disable	–	25	ns
t_{btvo}	TAP controller falling edge of clock to data output enable	–	25	ns
t_{btcpsu}	BSCAN test Capture register setup time	25	–	ns
t_{btcph}	BSCAN test Capture register hold time	25	–	ns
t_{btuco}	BSCAN test Update reg, falling edge of clock to valid output	–	50	ns
t_{btuoz}	BSCAN test Update reg, falling edge of clock to output disable	–	50	ns
t_{btuov}	BSCAN test Update reg, falling edge of clock to output enable	–	50	ns

Absolute Maximum Ratings [1, 2]

Supply Voltage V_{CC} ..... -0.5 to +5.4V

Input Voltage Applied..... -0.5 to +5.6V

Tri-Stated Output Voltage Applied..... -0.5 to +5.6V

Storage Temperature..... -65 to 150°C

Case Temp. with Power Applied ..... -55 to 125°C

Max. Junction Temp. (T_J) with Power Applied ... 150°C

1. Stresses above those listed under the "Absolute Maximum Ratings" may cause permanent damage to the device. Functional operation of the device at these or at any other conditions above those indicated in the operational sections of this specification is not implied (while programming, follow the programming specifications).
2. Compliance with the Thermal Management section of the Lattice Semiconductor Data Book or CD-ROM is a requirement.

DC Recommended Operating Condition

SYMBOL	PARAMETER			MIN.	MAX.	UNITS
V_{CC}	Supply Voltage	Commercial	T_A = 0°C to +70°C	3.00	3.60	V
		Industrial	T_A = -40°C to +85°C	3.00	3.60	V
V_{CCIO}	I/O Reference Voltage			2.3	3.60	V

Table 2-0005/5KVE

Capacitance (T_A=25°C,f=1.0 MHz)

SYMBOL	PARAMETER	TYPICAL	UNITS	TEST CONDITIONS
C_1	I/O Capacitance	10	pf	V_{CC} = 3.3V, $V_{I/O}$ = 0.0V
C_2	Clock Capacitance	10	pf	V_{CC} = 3.3V, V_{CK} = 0.0V
C_3	Global Input Capacitance	10	pf	V_{CC} = 3.3V, V_G = 0.0V

Table 2-0006/5KVE

Erase Reprogram Specification

PARAMETER	MINIMUM	MAXIMUM	UNITS
ispLSI Erase/Reprogram Cycles	10000	–	Cycles

Table 2-0008/5KVE

Switching Test Conditions

Input Pulse Levels	GND to $V_{CCIO_{min}}$
Input Rise and Fall Time	≤ 1.5ns 10% to 90%
Input Timing Reference Levels	1.5V
Ouput Timing Reference Levels	1.5V
Output Load	See Figure 9

Table 2-0003/5KVE

3-state levels are measured 0.5V from steady-state active level.

Figure 9. Test Load

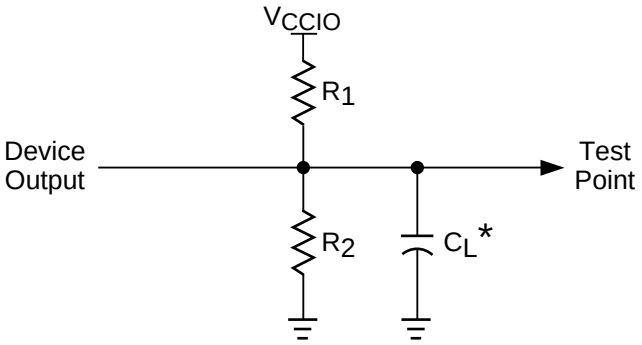

*C_L includes Test Fixture and Probe Capacitance.

0213D

Output Load Conditions (See Figure 9)

TEST CONDITION		3.3V R1	3.3V R2	2.5V R1	2.5V R2	CL
A		316Ω	348Ω	511Ω	475Ω	35pF
B	Active High	∞	348Ω	∞	475Ω	35pF
	Active Low	316Ω	∞	511Ω	∞	35pF
C	Active High to Z at V_{OH}-0.5V	∞	348Ω	∞	475Ω	5pF
	Active Low to Z at V_{OL}+0.5V	316Ω	∞	511Ω	∞	5pF
D	Slow Slew	∞	∞	∞	∞	35pF

Table 2-0004A/5KVE

DC Electrical Characteristics for 3.3V Range[1]

Over Recommended Operating Conditions

SYMBOL	PARAMETER	CONDITION	MIN.	TYP.	MAX.	UNITS
V_{CCIO}	I/O Reference Voltage		3.0	–	3.6	V
V_{IL}	Input Low Voltage		-0.3	–	0.8	V
V_{IH}	Input High Voltage		2.0	–	5.25	V
V_{OL}	Output Low Voltage	$V_{CCIO = min}$, I_{OL} = 8 mA	–	–	0.4	V
V_{OH}	Output High Voltage	$V_{CCIO = min}$, I_{OH} = -4 mA	2.4	–	–	V

Table 2-0007/5KVE

1. I/O voltage configuration must be set to VCC.

DC Electrical Characteristics for 2.5V Range[1]

Over Recommended Operating Conditions

SYMBOL	PARAMETER	CONDITION	MIN.	TYP.	MAX.	UNITS
V_{CCIO}	I/O Reference Voltage		2.3	–	2.7	V
V_{IL}	Input Low Voltage		-0.3	–	0.7	V
V_{IH}	Input High Voltage		1.7	–	5.25	V
V_{OL}	Output Low Voltage	$V_{CCIO=min}$, I_{OL}= 100µA	–	–	0.2	V
		$V_{CCIO=min}$, I_{OL}= 2mA	–	–	0.6	V
V_{OH}	Output High Voltage	$V_{CCIO=min}$, I_{OH}= -100µA	2.1	–	–	V
		$V_{CCIO=min}$, I_{OH}= -2mA	1.8	–	–	V

1. I/O voltage configuration must be set to VCCIO.

2.5V/5512VE

DC Electrical Characteristics

Over Recommended Operating Conditions

SYMBOL	PARAMETER	CONDITION	MIN.	TYP.	MAX.	UNITS
I_{IL}	Input or I/O Low Leakage Current	$0V \le V_{IN} \le V_{IL}$(Max.)	–	–	-10	µA
I_{IH}	Input or I/O High Leakage Current	$(V_{CCIO}-0.2)V \le V_{IN} \le V_{CCIO}$	–	–	10	µA
		$V_{CCIO} \le V_{IN} \le 5.25V$	–	–	50	µA
I_{PU}[1]	I/O Active Pullup Current	$0V \le V_{IN} \le V_{IL}$	–	–	-200	µA
I_{BHL}	Bus Hold Low Sustaining Current	$V_{IN} = V_{IL(max)}$	40	–	–	µA
I_{BHH}	Bus Hold High Sustaining Current	$V_{IN} = V_{IH(min)}$	-40	–	–	µA
I_{BHLO}	Bus Hold Low Overdrive Current	$0V \le V_{IN} \le V_{CCIO}$	–	–	550	µA
I_{BHLH}	Bus Hold High Overdrive Current	$0V \le V_{IN} \le V_{CCIO}$	–	–	-550	µA
I_{BHT}	Bus Hold Trip Points		V_{IL}	–	V_{IH}	V
I_{VCCIO}	Current Needed for V_{CCIO} Pin	All I/Os Pulled-up, (Total I/Os * I_{PUmax})	–	–	30	mA

1. Pullup is capable of pulling to a minimum voltage of V_{OH} under no-load conditions.

DC Char_5KVE

External Switching Characteristics

Over Recommended Operating Conditions

PARAM.	TEST[3] COND.	DESCRIPTION [4,5]	-155		-125		UNITS
			MIN.	MAX.	MIN.	MAX.	
tpd1[6]	A	Data Prop. Delay, 5PT Bypass	—	6.5	—	7.5	ns
tpd2[6]	A	Data Propagation Delay	—	8.0	—	9.5	ns
fmax	A	Clock Frequency with Internal Feedback[1]	155	—	125	—	MHz
fmax (Ext.)	—	Clock Freq. with Ext. Feedback,1/(tsu2 + tco1)	105	—	87	—	MHz
fmax (Tog.)	—	Clock Frequency, Max Toggle[2]	200	—	167	—	MHz
tsu1	—	GLB Reg. Setup Time before Clk, 5PT bypass	4.5	—	5.0	—	ns
tco1[6]	A	GLB Reg. Clock to Output Delay	—	3.5	—	4.5	ns
th1	—	GLB Reg. Hold Time after Clock, 5PT bypass	0.0	—	0.0	—	ns
tsu2	—	GLB Reg. Setup Time before Clock	6.0	—	7.0	—	ns
th2	—	GLB Reg. Hold Time after Clock	0.0	—	0.0	—	ns
tsu3	—	GLB Reg. Setup Time before Clock, Input Reg. Path	3.0	—	3.5	—	ns
th3	—	GLB Reg. Hold Time after Clock, Input Reg. Path	0.5	—	0.5	—	ns
tr1	A	Ext. Reset Pin to Output Delay	—	9.0	—	10.0	ns
trw1[7]	—	Ext. Reset Pulse Duration	4.5	—	5.0	—	ns
tpten/dis[6]	B/C	Local Product Term Output Enable/Disable	—	7.0	—	8.5	ns
tgpten/dis[6]	B/C	Global Product Term Output Enable/Disable	—	13.0	—	14.0	ns
tgen/dis[6]	B/C	Global OE Input to Output Enable/Disable	—	4.5	—	5.5	ns
tten/dis[6]	B/C	Test OE Input to Output Enable/Disable	—	9.5	—	10.5	ns
twh	—	Ext. Sync. Clock Pulse Duration, High	2.5	—	3.0	—	ns
twl	—	Ext. Sync. Clock Pulse Duration, Low	2.5	—	3.0	—	ns

Timing Ext.5512ve1.eps

Timing v.2.0

1. Standard 16-bit counter using GRP feedback.
2. fmax (Toggle) may be less than 1/(twh + twl). This is to allow for a clock duty cycle of other than 50%.
3. Reference Switching Test Conditions section.
4. Unless noted otherwise, all timing numbers are taken with worst case PTSA fanout, a GRP load of 1 GLB, CLK0, and high-speed AND array.
5. Timing parameters measured using normal active output driver.
6. The delay parameters are measured with Vcc as I/O voltage reference. An additional 0.5ns delay is incurred when Vccio is used as I/O voltage reference.
7. Pulse widths less than minimum may cause unknown output behavior.

External Switching Characteristics

Over Recommended Operating Conditions

PARAM.	TEST[3] COND.	DESCRIPTION [4,5]	-100		-80		UNITS
			MIN.	MAX.	MIN.	MAX.	
tpd1[6]	A	Data Prop. Delay, 5PT Bypass	—	10.0	—	12.0	ns
tpd2[6]	A	Data Propagation Delay	—	12.0	—	15.0	ns
fmax	A	Clock Frequency with Internal Feedback[1]	100	—	80	—	MHz
fmax (Ext.)	—	Clock Freq. with Ext. Feedback,1/(tsu2 + tco1)	67	—	56	—	MHz
fmax (Tog.)	—	Clock Frequency, Max Toggle[2]	125	—	100	—	MHz
tsu1	—	GLB Reg. Setup Time before Clk, 5PT bypass	7.0	—	8.0	—	ns
tco1[6]	A	GLB Reg. Clock to Output Delay	—	6.0	—	7.0	ns
th1	—	GLB Reg. Hold Time after Clock, 5PT bypass	0.0	—	0.0	—	ns
tsu2	—	GLB Reg. Setup Time before Clock	9.0	—	11.0	—	ns
th2	—	GLB Reg. Hold Time after Clock	0.0	—	0.0	—	ns
tsu3	—	GLB Reg. Setup Time before Clock, Input Reg. Path	4.5	—	5.5	—	ns
th3	—	GLB Reg. Hold Time after Clock, Input Reg. Path	1.0	—	1.0	—	ns
tr1	A	Ext. Reset Pin to Output Delay	—	11.5	—	13.0	ns
trw1[7]	—	Ext. Reset Pulse Duration	6.5	—	8.0	—	ns
tpten/dis[6]	B/C	Local Product Term Output Enable/Disable	—	10.0	—	12.0	ns
tgpten/dis[6]	B/C	Global Product Term Output Enable/Disable	—	15.5	—	17.0	ns
tgen/dis[6]	B/C	Global OE Input to Output Enable/Disable	—	7.5	—	9.0	ns
tten/dis[6]	B/C	Test OE Input to Output Enable/Disable	—	11.5	—	12.5	ns
twh	—	Ext. Sync. Clock Pulse Duration, High	4.0	—	5.0	—	ns
twl	—	Ext. Sync. Clock Pulse Duration, Low	4.0	—	5.0	—	ns

1. Standard 16-bit counter using GRP feedback.
2. fmax (Toggle) may be less than 1/(twh + twl). This is to allow for a clock duty cycle of other than 50%.
3. Reference Switching Test Conditions section.
4. Unless noted otherwise, all timing numbers are taken with worst case PTSA fanout, a GRP load of 1 GLB, CLK0, and high-speed AND array.
5. Timing parameters measured using normal active output driver.
6. The delay parameters are measured with Vcc as I/O voltage reference. An additional 0.5ns delay is incurred when Vccio is used as I/O reference.
7. Pulse widths less than minimum may cause unknown output behavior.

Timing Ext.5512ve2.eps

Timing v.2.0

Internal Timing Parameters

Over Recommended Operating Conditions

PARAMETER	DESCRIPTION	-155		-125		-100		-80		UNIT
		MIN	MAX	MIN	MAX	MIN	MAX	MIN	MAX	
In/Out Delays										
tin	Input Buffer Delay	–	1.1	–	1.3	–	2.3	–	2.3	ns
tgclk_in	Global Clock Buffer Input Delay (clk0)	–	0.7	–	1.3	–	1.8	–	1.8	ns
trst	Global Reset Pin Delay	–	5.8	–	6.6	–	7.1	–	7.1	ns
tgoe	Global OE Pin Delay	–	3.2	–	3.9	–	5.9	–	7.4	ns
tbuf	Output Buffer Delay	–	2.0	–	2.2	–	2.7	–	3.7	ns
ten	Output Enable Delay	–	1.3	–	1.6	–	1.6	–	1.6	ns
tdis	Output Disable Delay	–	1.3	–	1.6	–	1.6	–	1.6	ns
Routing/GLB Delays										
troute	GRP and Logic Delay	–	3.1	–	3.6	–	4.0	–	4.5	ns
tpdb	5-pt Bypass Propagation Delay	–	0.3	–	0.4	–	1.0	–	1.5	ns
tpdi	Combinatorial Propagation Delay	–	0.0	–	0.0	–	0.0	–	0.0	ns
tptsa	Product Term Sharing Array	–	1.8	–	2.4	–	3.0	–	4.5	ns
tfbk	Internal Feedback Delay	–	0.0	–	0.0	–	0.0	–	0.5	ns
tinreg	Input Buffer to Macrocell Register Delay	–	1.9	–	2.5	–	2.5	–	3.5	ns
Register/Latch Delays										
ts	Register Setup Time	0.7	–	1.0	–	1.5	–	1.5	–	ns
ts_pt	Register Setup Time (Product Term Clock)	0.7	–	1.0	–	1.5	–	1.5	–	ns
th	Register Hold Time	2.8	–	3.0	–	4.0	–	5.0	–	ns
tcoi	Register Clock to GLB Output Delay	–	0.8	–	1.0	–	1.5	–	1.5	ns
tsl	Latch Setup Time	0.7	–	1.0	–	1.5	–	1.5	–	ns
thl	Latch Hold Time	2.8	–	3.0	–	4.0	–	5.0	–	ns
tgoi	Latch Gate to GLB Output Delay	–	0.8	–	1.0	–	1.5	–	1.5	ns
tpdli	GLB Latch propagation Delay	–	1.0	–	1.5	–	2.0	–	2.5	ns
tces	Clock Enable Setup Time	4.1	–	4.3	–	5.3	–	6.3	–	ns
tceh	Clock Enable Hold Time	0.9	–	1.7	–	2.7	–	3.7	–	ns
tsri	Asynchronous Set/Reset to GLB Output Delay	–	1.2	–	1.2	–	1.7	–	2.2	ns
tsrr	Asynchronous Set/Reset Recovery Time	0.9	–	1.2	–	1.2	–	2.2	–	ns
Control Delays										
tptclk	Macrocell PT Clock Delay	–	0.4	–	0.4	–	0.5	–	0.5	ns
tbclk	Block PT Clock Delay	–	1.4	–	1.9	–	2.5	–	2.5	ns
tptsr	Macrocell PT Set/Reset Delay	–	1.1	–	3.7	–	4.8	–	4.8	ns
tbsr	Block PT Set/Reset Delay	–	2.1	–	5.7	–	6.8	–	6.8	ns
tptoe	Macrocell PT OE Delay	–	1.5	–	2.0	–	2.1	–	3.6	ns
tgptoe	Global PT OE Delay	–	7.5	–	7.5	–	7.6	–	8.6	ns

Note: Internal Timing Parameters are not tested and are for reference only. Refer to Timing Model in this data sheet for further details.

Timing v.2.0

ispLSI 5512VE Timing Parameters (continued)

ADDER TYPE	BASE PARAMETER	ADDER				UNITS
		-155	-125	-100	-80	
Routing Adders						
t_{lp}	t_{route}	1.0	1.5	1.5	1.5	ns
Tioi Input Adders						
clk1	t_{gclk_in}	1.5	1.7	1.7	1.7	ns
clk2	t_{gclk_in}	1.5	1.7	1.7	1.7	ns
clk3	t_{gclk_in}	1.5	1.7	1.7	1.7	ns
Tioo Output Adders[1]						
Slow Slew I/O	t_{buf}, t_{en}	4.0	4.0	4.0	4.0	ns
LVTTL_out	t_{buf}, t_{en}, t_{dis}	0.0	0.0	0.0	0.0	ns
LVCMOS25_out	t_{buf}, t_{en}, t_{dis}	0.5	0.5	0.5	0.5	ns
LVCMOS33_out	t_{buf}, t_{en}, t_{dis}	0.0	0.0	0.0	0.0	ns
Tbla Additional Block Loading Adders						
1	t_{route}	0.1	0.1	0.1	0.1	ns
2	t_{route}	0.2	0.2	0.2	0.2	ns
3	t_{route}	0.2	0.3	0.3	0.3	ns
4	t_{route}	0.3	0.4	0.4	0.4	ns
5	t_{route}	0.4	0.5	0.5	0.5	ns
6	t_{route}	0.5	0.6	0.6	0.6	ns
7	t_{route}	0.6	0.7	0.7	0.7	ns
8	t_{route}	0.6	0.8	0.8	0.8	ns
9	t_{route}	0.7	0.9	0.9	0.9	ns
10	t_{route}	0.8	1.0	1.0	1.0	ns
11	t_{route}	0.9	1.1	1.1	1.1	ns
12	t_{route}	1.0	1.2	1.2	1.2	ns
13	t_{route}	1.0	1.3	1.3	1.3	ns
14	t_{route}	1.1	1.4	1.4	1.4	ns
15	t_{route}	1.2	1.5	1.5	1.5	ns

[1]Timing for open drain configurations is the same as non-open drain configurations.

Timing Table/5512VE
Timing v.2.0

Note: Internal Timing Parameters are not tested and are for reference only. Refer to Timing Model in this data sheet for details.

ispLSI 5512VE Timing Model

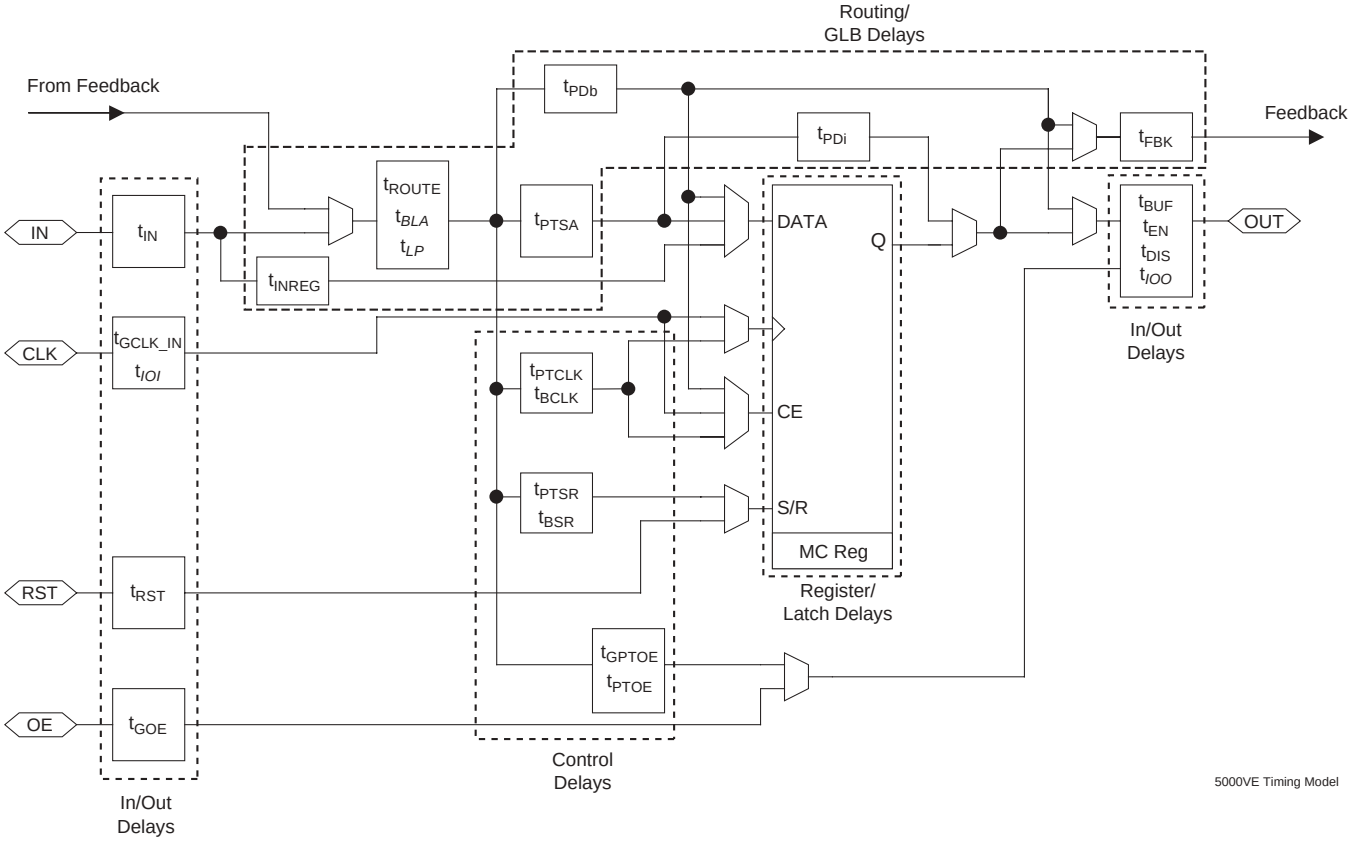

Note: Italicized parameters are delay adders above and beyond default conditions (i.e. GRP load of one GLB, CLK0, high-speed AND Array and VCC I/O option).

Power Consumption

Power consumption in the ispLSI 5512VE device depends on two primary factors: the speed at which the device is operating and the number of product terms used. The product terms have a fuse-selectable speed/power tradeoff setting. Each group of five product terms has a single speed/power tradeoff control fuse that acts on the complete group of five. The fast "high-speed" setting operates product terms at their normal full power consumption. For portions of the logic that can tolerate longer propagation delays, selecting the slower "low-power" setting will reduce the power dissipation for these product terms. Figure 10 shows the relationship between power and operating frequency.

Figure 10. Typical Device Power Consumption vs fmax

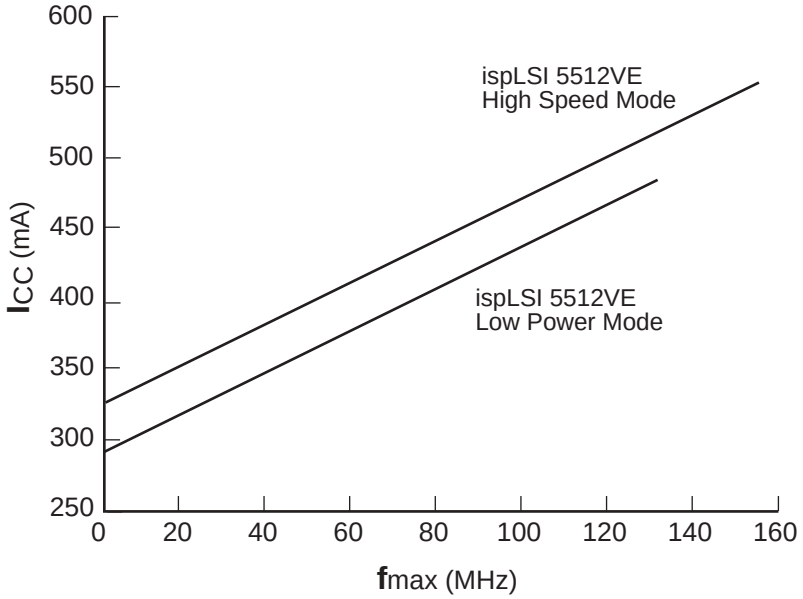

Notes: Configuration of 32 16-bit Counters
Typical Current at 3.3V, 25° C

I_{CC} can be estimated for the ispLSI 5512VE using the following equation:

High Speed Mode: ICC = 30 + (# of PTs * 0.3030) + (# of nets * Fmax * 0.00273)
Low Power Mode: ICC = 30 + (# of PTs * 0.2676) + (# of nets * Fmax * 0.00273)
# of PTs = Number of Product Terms used in design
# of nets = Number of Signals used in device
Fmax = Highest Clock Frequency to the device

The I_{CC} estimate is based on typical conditions (V_{CC} = 3.3V, room temperature) and an assumption of one GLB load on average exists. These values are for estimates only. Since the value of I_{CC} is sensitive to operating conditions and the program in the device, the actual I_{CC} should be verified.

0127/5512VE

Signal Descriptions

Signal Name	Description
TMS	Input - This pin is the Test Mode Select input, which is used to control the JTAG state machine.
TCK	Input - This pin is the Test Clock input pin used to clock through the JTAG state machine.
TDI	Input - This pin is the JTAG Test Data In pin used to load data.
TDO	Output - This pin is the JTAG Test Data Out pin used to shift data out.
TOE / I/O0	Input/Output - This pin functions as either the Test Output Enable pin or an I/O pin based upon customer's design. TOE tristates all I/O pins when a logic low is driven.
GOE0, GOE1	Input - These two pins are the Global Output Enable input pins.
RESET	Dedicated Reset Input - This pin resets all registers in the device. The global polarity (active high or low input) for this pin is selectable.
I/O	Input/Output – These are the general purpose I/O used by the logic array.
GND	Ground
NC[1]	No connect.
VCC	Vcc
CLK0, CLK1	Dedicated clock inputs for all registers. Both clocks are muxed before being used as the clock input to all registers in the device.
CLK2 / I/O, CLK3 / I/O	Input/Output - These pins share functionality. They can be used as dedicated clock inputs for all registers, as well as I/O pins.
VCCIO	Input - This pin is used for optional 2.5V outputs. Every I/O can independently select either 3.3V or the optional voltage as its output level. If the optional output voltage is not required, this pin must be connected to the Vcc supply. Programmable pull-up resistors and bus-hold latches only draw current from this supply.

1. NC pins are not to be connected to any active signals, VCC or GND.

Signal Configuration

ispLSI 5512VE 256-Ball fpBGA (1.0mm Ball Pitch / 17.0mm x 17.0mm Body Size)

	16	15	14	13	12	11	10	9	8	7	6	5	4	3	2	1	
A	I/O 113	I/O 116	I/O 121	I/O 125	I/O 126	I/O 131/ CLK3	I/O 133	I/O 139	I/O 140	CLK0	I/O 145	I/O 147	I/O 151	I/O 152	I/O 153	I/O 165	A
B	I/O 108	I/O 115	I/O 117	I/O 119/ CLK2	I/O 124	I/O 129	I/O 132	I/O 136	CLK1	I/O 144	I/O 149	I/O 156	I/O 157	I/O 163	I/O 164	I/O 168	B
C	I/O 106	I/O 114	NC[1]	I/O 120	I/O 123	I/O 128	I/O 135	I/O 138	I/O 141	I/O 143	I/O 148	I/O 155	I/O 159	I/O 160	I/O 161	I/O 172	C
D	I/O 105	I/O 109	I/O 111	GND	GND	VCC	GND	VCC	GND	GND	VCC	GND	VCC	I/O 169	I/O 167	I/O 175	D
E	I/O 104	NC[1]	I/O 101	VCC	I/O 112	I/O 122	I/O 127	I/O 134	I/O 142	I/O 150	I/O 158	I/O 166	GND	I/O 173	I/O 171	I/O 177	E
F	I/O 100	I/O 102	I/O 97	GND	I/O 110	I/O 118	I/O 130	I/O 137	I/O 146	I/O 154	I/O 162	I/O 174	VCC	I/O 181	I/O 176	I/O 179	F
G	I/O 96	I/O 98	TDO	VCC	I/O 103	I/O 107	VCC	GND	GND	VCC	I/O 170	I/O 178	GND	I/O 185	I/O 180	I/O 187	G
H	I/O 94	VCCIO	RESET	GND	I/O 95	I/O 99	GND	VCC	VCC	GND	I/O 182	I/O 186	VCC	I/O 184	I/O 183	I/O 188	H
J	I/O 93	I/O 92	I/O 90	GND	I/O 91	I/O 87	GND	VCC	VCC	GND	I/O 189	I/O 3	GND	I/O 191	I/O 190	TMS	J
K	I/O 89	I/O 88	I/O 86	VCC	I/O 83	I/O 79	VCC	GND	GND	VCC	I/O 10	I/O 7	VCC	TDI	TCK	I/O 0/ TOE	K
L	I/O 85	I/O 84	I/O 82	GND	I/O 75	I/O 68	I/O 59	I/O 51	I/O 39	I/O 31	I/O 23	I/O 15	GND	I/O 4	I/O 1	I/O 2	L
M	I/O 81	I/O 80	I/O 77	GND	I/O 71	I/O 63	I/O 55	I/O 47	I/O 43	I/O 35	I/O 27	I/O 19	VCC	I/O 8	I/O 6	I/O 5	M
N	I/O 78	I/O 74	I/O 76	VCC	GND	VCC	GND	VCC	GND	GND	VCC	GND	GND	I/O 11	I/O 12	I/O 9	N
P	I/O 73	I/O 70	I/O 65	I/O 66	I/O 57	I/O 56	GOE1	GOE0	I/O 41	I/O 42	I/O 36	I/O 26	I/O 22	I/O 20	I/O 13	I/O 14	P
R	I/O 72	I/O 69	I/O 62	I/O 67	I/O 64	I/O 58	I/O 48	I/O 46	I/O 40	I/O 34	I/O 29	I/O 25	I/O 24	I/O 18	I/O 17	I/O 16	R
T	I/O 61	I/O 60	I/O 54	I/O 53	I/O 52	I/O 50	I/O 49	I/O 45	I/O 44	I/O 38	I/O 37	I/O 33	I/O 32	I/O 30	I/O 28	I/O 21	T
	16	15	14	13	12	11	10	9	8	7	6	5	4	3	2	1	

ispLSI 5512VE

Bottom View

1. NCs are not to be connected to any active signals, VCC or GND.

Note: Ball A1 indicator dot on top side of package.

Signal Configuration

ispLSI 5512VE 272-Ball BGA (1.27mm Ball Pitch / 27.0mm x 27.0mm Body Size)

	20	19	18	17	16	15	14	13	12	11	10	9	8	7	6	5	4	3	2	1	
A	I/O 114	I/O 115	I/O 119/ CLK2	NC[1]	I/O 122	I/O 126	I/O 129	I/O 132	I/O 136	I/O 139	I/O 140	I/O 142	I/O 146	I/O 149	I/O 151	I/O 154	I/O 158	I/O 160	I/O 164	GND	A
B	NC[1]	NC[1]	NC[1]	I/O 116	I/O 121	I/O 125	I/O 128	I/O 131/ CLK3	I/O 135	I/O 137	I/O 141	I/O 143	I/O 147	I/O 150	I/O 153	I/O 157	I/O 159	NC[1]	I/O 163	I/O 165	B
C	I/O 111	NC[1]	NC[1]	I/O 117	I/O 120	I/O 123	I/O 127	I/O 130	I/O 134	I/O 138	CLK0	I/O 144	I/O 148	I/O 152	I/O 156	NC[1]	I/O 162	NC[1]	I/O 166	I/O 169	C
D	I/O 109	NC[1]	I/O 113	GND	I/O 118	VCC	I/O 124	GND	I/O 133	VCC	CLK1	I/O 145	GND	I/O 155	VCC	I/O 161	GND	NC[1]	I/O 167	I/O 170	D
E	I/O 105	I/O 108	I/O 110	I/O 112													I/O 168	I/O 171	NC[1]	I/O 172	E
F	I/O 102	I/O 104	I/O 107	VCC													VCC	I/O 173	I/O 175	I/O 176	F
G	I/O 100	I/O 101	I/O 103	I/O 106													I/O 174	I/O 177	I/O 178	I/O 179	G
H	I/O 97	I/O 98	I/O 99	GND													GND	I/O 180	I/O 181	I/O 182	H
J	TDO	VCCIO	RESET	I/O 96					GND	GND	GND	GND					I/O 183	I/O 184	I/O 185	I/O 186	J
K	I/O 92	I/O 93	I/O 94	I/O 95					GND	GND	GND	GND					VCC	I/O 188	I/O 187	I/O 189	K
L	I/O 91	I/O 89	I/O 90	VCC					GND	GND	GND	GND					TCK	TMS	I/O 191	I/O 190	L
M	I/O 88	I/O 87	I/O 86	I/O 85					GND	GND	GND	GND					I/O 2	I/O 1	I/O 0/ TOE	TDI	M
N	I/O 84	I/O 83	I/O 82	GND													GND	I/O 5	I/O 4	I/O 3	N
P	I/O 81	NC[1]	I/O 80	I/O 77													I/O 12	I/O 9	I/O 7	I/O 6	P
R	I/O 79	I/O 78	I/O 76	VCC													VCC	NC[1]	I/O 10	I/O 8	R
T	NC[1]	I/O 75	I/O 74	NC[1]													NC[1]	I/O 14	I/O 13	I/O 11	T
U	I/O 73	I/O 70	I/O 71	GND	I/O 64	VCC	I/O 58	GND	I/O 48	GOE1	VCC	I/O 37	GND	I/O 28	VCC	I/O 21	GND	NC[1]	NC[1]	NC[1]	U
V	I/O 72	I/O 69	I/O 68	I/O 65	I/O 62	I/O 59	I/O 55	I/O 51	I/O 47	GOE0	I/O 42	I/O 38	I/O 34	I/O 31	I/O 27	I/O 24	I/O 20	I/O 17	I/O 16	I/O 15	V
W	NC[1]	NC[1]	I/O 66	NC[1]	I/O 60	I/O 56	I/O 53	I/O 50	I/O 46	I/O 45	I/O 41	I/O 39	I/O 35	I/O 32	I/O 29	I/O 25	NC[1]	I/O 19	NC[1]	NC[1]	W
Y	NC[1]	I/O 67	I/O 63	I/O 61	I/O 57	I/O 54	I/O 52	I/O 49	NC[1]	I/O 44	I/O 43	I/O 40	I/O 36	I/O 33	I/O 30	I/O 26	I/O 23	I/O 22	NC[1]	I/O 18	Y
	20	19	18	17	16	15	14	13	12	11	10	9	8	7	6	5	4	3	2	1	

ispLSI 5512VE

Bottom View

1. NCs are not to be connected to any active signals, Vcc or GND.

Note: Ball A1 indicator dot on top side of package.

Signal Configuration

ispLSI 5512VE 388-Ball fpBGA (1.0mm Ball Pitch / 23.0mm x 23.0mm Body Size)

	22	21	20	19	18	17	16	15	14	13	12	11	10	9	8	7	6	5	4	3	2	1	
A	GND	I/O 170	I/O 174	I/O 178	I/O 181	I/O 184	I/O 189	I/O 192	I/O 196	I/O 201	I/O 202	I/O 207	I/O 211	I/O 215	I/O 218	I/O 223	I/O 226	I/O 231	I/O 234	I/O 237	NC[1]	GND	A
B	I/O 169	GND	I/O 171	I/O 175	I/O179/ CLK2	I/O 182	I/O 187	I/O 191	I/O 195	I/O 200	I/O 204	I/O 208	CLK0	I/O 216	I/O 219	I/O 224	I/O 228	I/O 233	I/O 236	I/O 241	GND	NC[1]	B
C	I/O 164	I/O 165	GND	I/O 172	I/O 177	I/O 180	I/O 186	I/O 190	I/O 193	I/O 199	I/O 205	I/O 209	I/O 213	I/O 217	I/O 221	I/O 227	I/O 232	I/O 235	I/O 240	GND	I/O 242	I/O 245	C
D	I/O 161	I/O 163	I/O 168	GND	I/O 173	VCC	I/O 183	I/O 188	VCC	I/O 198	VCC	I/O 210	I/O 214	VCC	I/O 225	I/O 229	VCC	I/O 238	GND	I/O 243	I/O 246	I/O 249	D
E	I/O 156	I/O 160	I/O 162	I/O 166															I/O 244	I/O 247	I/O 250	I/O 252	E
F	I/O 153	I/O 155	I/O 159	VCC															VCC	I/O 251	I/O 253	I/O 256	F
G	I/O 147	I/O 151	I/O 154	I/O 157			VCC	VCC	NC[1]	I/O197 CLK3	I/O 206	CLK1	I/O 220	NC[1]	VCC	VCC			I/O 254	I/O 255	I/O 258	I/O 259	G
H	I/O 145	I/O 146	I/O 148	I/O 152			VCC	NC[1]	GND	GND	GND	GND	GND	GND	NC[1]	VCC			I/O 260	I/O 261	I/O 262	I/O 263	H
J	VCCIO	RESET	I/O 144	VCC			NC[1]	GND	GND	GND	GND	GND	GND	GND	GND	NC[1]			VCC	I/O 264	I/O 265	I/O 268	J
K	I/O 140	I/O 141	I/O 142	TDO			I/O 150	GND	GND	GND	GND	GND	GND	GND	GND	I/O 267			I/O 269	I/O 270	I/O 271	I/O 272	K
L	I/O 135	I/O 136	I/O 137	I/O 139			I/O 143	GND	GND	GND	GND	GND	GND	GND	GND	I/O 277			VCC	I/O 276	I/O 274	I/O 273	L
M	I/O 131	I/O 132	I/O 134	VCC			I/O 133	GND	GND	GND	GND	GND	GND	GND	GND	I/O 287			I/O 281	I/O 280	I/O 279	I/O 278	M
N	I/O 130	I/O 128	I/O 127	I/O 126			I/O 124	GND	GND	GND	GND	GND	GND	GND	GND	I/O 5			TMS	I/O 285	I/O 283	I/O 282	N
P	I/O 125	I/O 123	I/O 122	VCC			NC[1]	GND	GND	GND	GND	GND	GND	GND	GND	NC[1]			VCC	TCK	TDI	I/O 286	P
R	I/O 121	I/O 119	I/O 118	I/O 116			VCC	NC[1]	GND	GND	GND	GND	GND	GND	NC[1]	VCC			I/O 7	I/O 4	I/O 1	I/O0/ TOE	R
T	I/O 117	I/O 115	I/O 114	I/O 110			VCC	VCC	NC[1]	I/O 76	GOE1	I/O 61	I/O 52	NC[1]	VCC	VCC			I/O 13	I/O 9	I/O 6	I/O 2	T
U	I/O 113	I/O 112	I/O 108	VCC															VCC	I/O 14	I/O 10	I/O 8	U
V	I/O 109	I/O 107	I/O 105	I/O 101															I/O 23	I/O 17	I/O 15	I/O 11	V
W	I/O 106	I/O 104	I/O 100	GND	I/O 94	VCC	I/O 85	I/O 80	VCC	I/O 69	I/O 65	VCC	I/O 53	VCC	I/O 44	I/O 38	VCC	I/O 28	GND	I/O 24	I/O 18	I/O 16	W
Y	I/O 103	I/O 99	GND	I/O 95	I/O 90	I/O 87	I/O 82	I/O 77	I/O 72	GOE0	I/O 64	I/O 60	I/O 54	I/O 49	I/O 45	I/O 41	I/O 35	I/O 32	I/O 27	GND	I/O 22	I/O 19	Y
AA	I/O 98	GND	I/O 96	I/O 91	I/O 88	I/O 84	I/O 79	I/O 74	I/O 71	I/O 68	I/O 63	I/O 59	I/O 55	I/O 50	I/O 46	I/O 42	I/O 37	I/O 34	I/O 31	I/O 26	GND	I/O 20	AA
AB	GND	I/O 97	I/O 92	I/O 89	I/O 86	I/O 81	I/O 78	I/O 73	I/O 70	I/O 67	I/O 62	I/O 58	I/O 56	I/O 51	I/O 47	I/O 43	I/O 40	I/O 36	I/O 33	I/O 29	I/O 25	GND	AB
	22	21	20	19	18	17	16	15	14	13	12	11	10	9	8	7	6	5	4	3	2	1	

ispLSI 5512VE

Bottom View

1. NCs are not to be connected to any active signals, VCC or GND.

Note: Ball A1 indicator dot on top side of package.

Signal Configuration

ispLSI 5512VE 388-Ball BGA (1.27mm Ball Pitch / 35.0mmx 35.0mm Body Size)

	26	25	24	23	22	21	20	19	18	17	16	15	14	13	12	11	10	9	8	7	6	5	4	3	2	1	
A	GND	I/O 174	NC[1]	I/O 179/ CLK2	I/O 183	I/O 187	I/O 189	I/O 193	I/O 196	I/O 199	NC[1]	I/O 205	I/O 209	CLK0	I/O 215	I/O 218	NC[1]	I/O 226	I/O 228	I/O 231	I/O 235	I/O 238	I/O 242	I/O 246	GND	GND	A
B	GND	GND	I/O 175	I/O 177	I/O 180	I/O 184	I/O 188	I/O 191	I/O 195	I/O 197/ CLK3	I/O 201	I/O 204	I/O 207	I/O 211	I/O 213	I/O 216	I/O 220	I/O 224	I/O 227	I/O 229	I/O 233	I/O 237	I/O 240	I/O 244	GND	I/O 247	B
C	I/O 173	I/O 171	GND	I/O 178	I/O 182	I/O 186	I/O 190	NC[1]	I/O 198	I/O 202	I/O 206	I/O 210	CLK1	I/O 214	I/O 217	I/O 221	I/O 225	NC[1]	I/O 232	I/O 236	NC[1]	I/O 243	I/O 245	GND	NC[1]	I/O 249	C
D	I/O 170	I/O 168	I/O 172	GND	I/O 181	VCC	NC[1]	GND	I/O 192	I/O 200	VCC	I/O 208	GND	NC[1]	I/O 219	VCC	I/O 223	GND	NC[1]	I/O 234	VCC	I/O 241	GND	I/O 250	NC[1]	I/O 251	D
E	I/O 166	I/O 165	NC[1]	I/O 169																			I/O 253	I/O 254	I/O 252	I/O 255	E
F	I/O 163	I/O 161	NC[1]	VCC																			VCC	I/O 258	I/O 256	I/O 259	F
G	I/O 159	I/O 157	I/O 164	I/O 162																			NC[1]	I/O 262	I/O 260	I/O 261	G
H	I/O 155	I/O 154	I/O 160	NC[1]																			GND	NC[1]	I/O 263	I/O 265	H
J	I/O 153	I/O 151	I/O 156	GND																			I/O 264	I/O 270	I/O 267	I/O 268	J
K	NC[1]	I/O 147	I/O 152	I/O 150																			I/O 272	I/O 274	I/O 269	I/O 271	K
L	I/O 145	RESET	I/O 148	VCC							GND	GND	GND	GND	GND	GND							VCC	I/O 277	I/O 273	NC[1]	L
M	VCCIO	I/O 143	I/O 144	I/O 146							GND	GND	GND	GND	GND	GND							I/O 279	I/O 281	NC[1]	I/O 276	M
N	I/O 141	I/O 139	TDO	I/O 140							GND	GND	GND	GND	GND	GND							GND	I/O 285	I/O 278	I/O 280	N
P	I/O 137	I/O 135	I/O 142	GND							GND	GND	GND	GND	GND	GND							I/O 283	I/O 287	I/O 282	NC[1]	P
R	I/O 133	I/O 132	NC[1]	I/O 136							GND	GND	GND	GND	GND	GND							I/O 1	TDI	I/O 286	TMS	R
T	I/O 131	NC[1]	I/O 134	VCC							GND	GND	GND	GND	GND	GND							VCC	NC[1]	TCK	I/O 0/ TOE	T
U	I/O 127	I/O 125	I/O 130	I/O 128																			I/O 5	I/O 7	I/O 2	I/O 4	U
V	I/O 124	I/O 123	I/O 126	NC[1]																			GND	I/O 11	I/O 6	I/O 8	V
W	I/O 121	I/O 119	I/O 122	GND																			I/O 13	I/O 15	I/O 9	I/O 10	W
Y	I/O 117	I/O 116	I/O 118	I/O 113																			I/O 17	I/O 19	NC[1]	I/O 14	Y
AA	I/O 115	I/O 112	I/O 114	VCC																			VCC	I/O 22	I/O 16	I/O 18	AA
AB	NC[1]	I/O 108	I/O 110	I/O 109																			I/O 24	I/O 26	I/O 20	NC[1]	AB
AC	I/O 107	NC[1]	I/O 106	GND	I/O 97	VCC	I/O 90	I/O 86	GND	I/O 79	VCC	NC[1]	I/O 68	GND	I/O 64	VCC	I/O 56	NC[1]	GND	I/O 41	VCC	I/O 37	GND	I/O 28	I/O 23	I/O 25	AC
AD	I/O 105	I/O 104	GND	I/O 101	I/O 99	I/O 95	I/O 92	I/O 88	I/O 84	I/O 81	I/O 77	I/O 73	I/O 70	GOE1	NC[1]	I/O 62	I/O 58	I/O 54	I/O 50	I/O 46	I/O 42	I/O 38	I/O 34	GND	I/O 27	I/O 29	AD
AE	I/O 103	GND	I/O 100	I/O 96	NC[1]	I/O 89	I/O 85	NC[1]	I/O 80	I/O 76	I/O 72	I/O 69	I/O 67	I/O 63	I/O 60	NC[1]	I/O 53	I/O 51	I/O 47	I/O 44	I/O 40	I/O 36	I/O 33	I/O 31	GND	GND	AE
AF	GND	GND	NC[1]	I/O 98	I/O 94	I/O 91	I/O 87	NC[1]	I/O 82	I/O 78	I/O 74	I/O 71	GOE0	I/O 65	I/O 61	I/O 59	I/O 55	I/O 52	I/O 49	I/O 45	I/O 43	NC[1]	I/O 35	I/O 32	NC[1]	GND	AF
	26	25	24	23	22	21	20	19	18	17	16	15	14	13	12	11	10	9	8	7	6	5	4	3	2	1	

ispLSI 5512VE

Bottom View

1. NCs are not to be connected to any active signals, VCC or GND.

Note: Ball A1 indicator dot on top side of package.

Part Number Description

ispLSI 5512VE – XXX X XXXX X

Device Family

Device Number

Speed
155 = 155 MHz fmax
125 = 125 MHz fmax
100 = 100 MHz fmax
80 = 80 MHz fmax

Power
L = Low

Grade
Blank = Commercial
I = Industrial

Package
F256 = 256-Ball fpBGA (Thermally Enhanced)
B272 = 272-Ball BGA (Thermally Enhanced)
F388 = 388-Ball fpBGA (Thermally Enhanced)
B388 = 388-Ball BGA (Thermally Enhanced)

0212/5512ve

Ordering Information

COMMERCIAL

FAMILY	fmax (MHz)	tpd (ns)	ORDERING NUMBER	PACKAGE
ispLSI	155	6.5	ispLSI 5512VE-155LF256	256-Ball fpBGA
	155	6.5	ispLSI 5512VE-155LB272	272-Ball BGA
	155	6.5	ispLSI 5512VE-155LF388	388-Ball fpBGA
	155	6.5	ispLSI 5512VE-155LB388	388-Ball BGA
	125	7.5	ispLSI 5512VE-125LF256	256-Ball fpBGA
	125	7.5	ispLSI 5512VE-125LB272	272-Ball BGA
	125	7.5	ispLSI 5512VE-125LF388	388-Ball fpBGA
	125	7.5	ispLSI 5512VE-125LB388	388-Ball BGA
	100	10	ispLSI 5512VE-100LF256	256-Ball fpBGA
	100	10	ispLSI 5512VE-100LB272	272-Ball BGA
	100	10	ispLSI 5512VE-100LF388	388-Ball fpBGA
	100	10	ispLSI 5512VE-100LB388	388-Ball BGA

Table 2-0041A/5512VE

INDUSTRIAL

FAMILY	fmax (MHz)	tpd (ns)	ORDERING NUMBER	PACKAGE
ispLSI	125	7.5	ispLSI 5512VE-125LF256I	256-Ball fpBGA
	125	7.5	ispLSI 5512VE-125LB272I	272-Ball BGA
	125	7.5	ispLSI 5512VE-125LF388I	388-Ball fpBGA
	125	7.5	ispLSI 5512VE-125LB388I	388-Ball BGA
	100	10	ispLSI 5512VE-100LF256I	256-Ball fpBGA
	100	10	ispLSI 5512VE-100LB272I	272-Ball BGA
	100	10	ispLSI 5512VE-100LF388I	388-Ball fpBGA
	100	10	ispLSI 5512VE-100LB388I	388-Ball BGA
	80	12	ispLSI 5512VE-80LF256I	256-Ball fpBGA
	80	12	ispLSI 5512VE-80LB272I	272-Ball BGA
	80	12	ispLSI 5512VE-80LF388I	388-Ball fpBGA
	80	12	ispLSI 5512VE-80LB388I	388-Ball BGA

The ispLI 5512VE is dual-marked with both Commercial and Industrial grades. The Commercial speed grade is faster (i.e. ispLSI 5512VE-155LF256) than the Industrial speed grade (i.e. ispLSI 5512VE-125LF256I).

Table 2-0041B/5512VE

Looking for pricing, stock, or lifecycle information?

Click below to explore more details on WIN SOURCE:

- View ISPLSI 5512VE-125LF388I on WIN SOURCE
- Lattice Semiconductor Corporation Information

Optimize Your Supply Chain with WIN SOURCE Solutions

- Global Sourcing Solution
- Obsolete Management
- Cost Control Management
- Shortage Management
- Alternative Solution
- Excess Inventory Management