THE DATASHEET OF

LM1084IS-12/NOPB

www.win-source.net 0086-755-83957316

LM1084 5-A Low Dropout Positive Regulators

1 Features

- Available in 3.3-V, 5.0-V, and Adjustable Versions
- Current Limiting and Thermal Protection
- Output Current 5 A
- Industrial Temperature Range −40°C to 125°C
- Line Regulation 0.015% (Typical)
- Load Regulation 0.1% (Typical)

2 Applications

- Post Regulator for Switching DC-DC Converter
- High-Efficiency Linear Regulators
- Battery Chargers

3 Description

The LM1084 is a regulator with a maximum dropout of 1.5 V at 5 A of load current. The device has the same pinout as TI's industry standard LM317.

Two resistors are required to set the output voltage of the adjustable output voltage version of the LM1084. Fixed output voltage versions integrate the adjust resistors.

The LM1084 circuit includes a zener trimmed bandgap reference, current limiting, and thermal shutdown.

Refer to LM1085 for the 3A version, and the LM1086 for the 1.5A version.

Device Information(1)

PART NUMBER	PACKAGE	BODY SIZE (NOM)
LM1084	TO-263 (3)	10.18 mm × 8.41 mm
	TO-220 (3)	14.986 mm × 10.16 mm

(1) For all available packages, see the orderable addendum at the end of the datasheet.

Typical Application

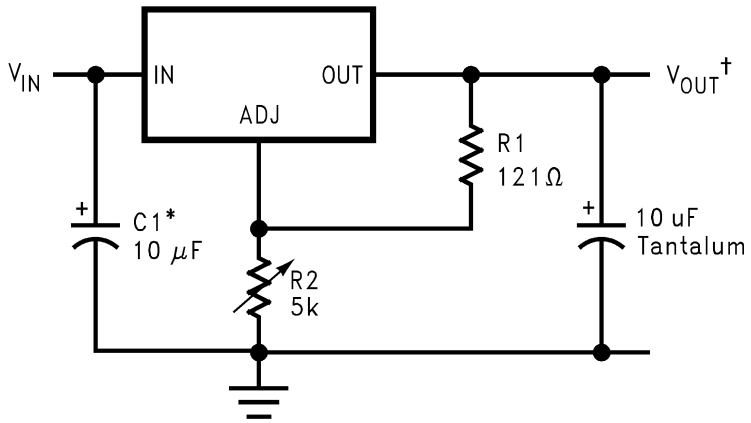

*NEEDED IF DEVICE IS FAR FROM FILTER CAPACITORS

$$^{\dagger}V_{OUT} = 1.25V\left(1 + \frac{R2}{R1}\right)$$

An IMPORTANT NOTICE at the end of this data sheet addresses availability, warranty, changes, use in safety-critical applications, intellectual property matters and other important disclaimers. PRODUCTION DATA.

Table of Contents

1 Features ... 1
2 Applications ... 1
3 Description ... 1
4 Revision History ... 2
5 Pin Configuration and Functions ... 3
6 Specifications ... 4
6.1 Absolute Maximum Ratings ... 4
6.2 ESD Ratings ... 4
6.3 Recommended Operating Conditions ... 4
6.4 Thermal Information ... 4
6.5 Electrical Characteristics ... 5
6.6 Typical Characteristics ... 7
7 Detailed Description ... 9
7.1 Overview ... 9
7.2 Functional Block Diagram ... 9
7.3 Feature Description ... 9
7.4 Device Functional Modes ... 11
8 Application and Implementation ... 13
8.1 Application Information ... 13
8.2 Typical Applications ... 13
9 Power Supply Recommendations ... 20
10 Layout ... 20
10.1 Layout Guidelines ... 20
10.2 Layout Example ... 20
10.3 Thermal Considerations ... 20
11 Device and Documentation Support ... 22
11.1 Trademarks ... 22
11.2 Electrostatic Discharge Caution ... 22
11.3 Glossary ... 22
12 Mechanical, Packaging, and Orderable Information ... 22

4 Revision History

Changes from Revision F (March 2013) to Revision G — **Page**

- Added *Pin Configuration and Functions* section, *ESD Ratings* table, *Feature Description* section, *Device Functional Modes*, *Application and Implementation* section, *Power Supply Recommendations* section, *Layout* section, *Device and Documentation Support* section, and *Mechanical, Packaging, and Orderable Information* section ... 1

Copyright © 1999–2015, Texas Instruments Incorporated

5 Pin Configuration and Functions

3-Pin
TO-220 Package
Top View

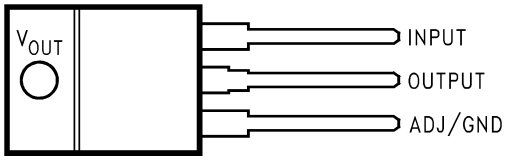

3-Pin
TO-263 Package
Top View

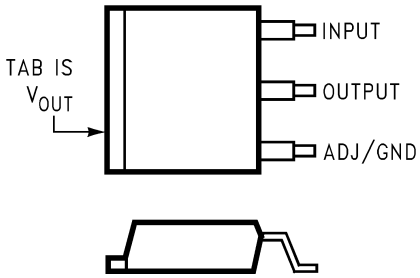

Pin Functions

PIN		I/O	DESCRIPTION
NAME	NO.		
ADJ/GND	1	-	Adjust pin for the adjustable output voltage version. Ground pin for the fixed output voltage versions.
OUTPUT	2	O	Output voltage pin for the regulator.
INPUT	3	I	Input voltage pin for the regulator.

6 Specifications

6.1 Absolute Maximum Ratings

over operating free-air temperature range (unless otherwise noted)[1][2]

	MIN	MAX	UNIT
Maximum Input to Output Voltage Differential			
LM1084-ADJ		29	V
LM1084-3.3		27	V
LM1084-5.0		25	V
Power Dissipation[3]		Internally Limited	
Junction Temperature (T_J)[4]		150	°C
Lead Temperature		260, to 10 sec	°C
Storage temperature, T_{stg}	–65	150	°C

(1) Absolute Maximum Ratings indicate limits beyond which damage to the device may occur. *Recommended Operating Conditions* indicate conditions for which the device is intended to be functional, but specific performance is not ensured. For ensured specifications and the test conditions, see the *Electrical Characteristics*.
(2) If Military/Aerospace specified devices are required, please contact the Texas Instruments Sales Office/Distributors for availability and specifications.
(3) Power dissipation is kept in a safe range by current limiting circuitry. Refer to *Overload Recovery*.
(4) The maximum power dissipation is a function of $T_{J(max)}$, θ_{JA}, and T_A. The maximum allowable power dissipation at any ambient temperature is $P_D = (T_{J(max)} – T_A)/\theta_{JA}$. All numbers apply for packages soldered directly into a PC board. Refer to *Thermal Considerations*.

6.2 ESD Ratings

		VALUE	UNIT
$V_{(ESD)}$ Electrostatic discharge	Human-body model (HBM), per ANSI/ESDA/JEDEC JS-001[1]	±2000	V

(1) JEDEC document JEP155 states that 500-V HBM allows safe manufacturing with a standard ESD control process.

6.3 Recommended Operating Conditions

over operating free-air temperature range (unless otherwise noted)[1]

	MIN	MAX	UNIT
Junction Temperature Range (T_J)[2]			
Control Section	–40	125	°C
Output Section	–40	150	°C

(1) Absolute Maximum Ratings indicate limits beyond which damage to the device may occur. *Recommended Operating Conditions* indicate conditions for which the device is intended to be functional, but specific performance is not ensured. For ensured specifications and the test conditions, see the *Electrical Characteristics*.
(2) The maximum power dissipation is a function of $T_{J(max)}$, θ_{JA}, and T_A. The maximum allowable power dissipation at any ambient temperature is $P_D = (T_{J(max)} – T_A)/\theta_{JA}$. All numbers apply for packages soldered directly into a PC board. Refer to *Thermal Considerations*.

6.4 Thermal Information

THERMAL METRIC[1]		LM1084		UNIT
		KTT	NDE	
		3 PINS	3 PINS	
$R_{\theta JA}$	Junction-to-ambient thermal resistance	40.4	22.7	°C/W
$R_{\theta JC(top)}$	Junction-to-case (top) thermal resistance	42.6	15.5	
$R_{\theta JB}$	Junction-to-board thermal resistance	23.0	4.1	
ψ_{JT}	Junction-to-top characterization parameter	9.8	2.1	
ψ_{JB}	Junction-to-board characterization parameter	22.0	4.1	
$R_{\theta JC(bot)}$	Junction-to-case (bottom) thermal resistance: Control Section/Output Section	0.65/2.7	0.65/2.7	

(1) For more information about traditional and new thermal metrics, see the *IC Package Thermal Metrics* application report, SPRA953.

Copyright © 1999–2015, Texas Instruments Incorporated

6.5 Electrical Characteristics

Typicals and limits apply for T_J = 25°C unless specified otherwise.

	PARAMETER	TEST CONDITIONS	MIN (1)	TYP (2)	MAX (1)	UNIT
V_{REF}	Reference Voltage	LM1084-ADJ, I_{OUT} = 10 mA, $V_{IN} - V_{OUT}$ = 3 V, 10 mA ≤ I_{OUT} ≤ $I_{FULL\ LOAD}$, 1.5 V ≤ (V_{IN}–V_{OUT}) ≤ 25 V (3)	1.238	1.250	1.262	V
		LM1084-ADJ, I_{OUT} = 10 mA, $V_{IN} - V_{OUT}$ = 3 V, 10 mA ≤ I_{OUT} ≤ $I_{FULL\ LOAD}$, 1.5 V ≤ (V_{IN}–V_{OUT}) ≤ 25 V (3), –40°C ≤ T_J ≤ 125°C	1.225	1.250	1.270	
V_{OUT}	Output Voltage (3)	LM1084-3.3, I_{OUT} = 0 mA, V_{IN} = 8 V, 0 ≤ I_{OUT} ≤ $I_{FULL\ LOAD}$, 4.8 V ≤ V_{IN} ≤ 15 V	3.270	3.300	3.330	V
		LM1084-3.3, I_{OUT} = 0 mA, V_{IN} = 8 V, 0 ≤ I_{OUT} ≤ $I_{FULL\ LOAD}$, 4.8 V ≤ V_{IN} ≤ 15 V , –40°C ≤ T_J ≤ 125°C	3.235	3.300	3.365	
		LM1084-5.0, I_{OUT} = 0 mA, V_{IN} = 8 V, 0 ≤ I_{OUT} ≤ $I_{FULL\ LOAD}$, 6.5 V ≤ V_{IN} ≤ 20 V	4.950	5.000	5.050	V
		LM1084-5.0, I_{OUT} = 0 mA, V_{IN} = 8 V, 0 ≤ I_{OUT} ≤ $I_{FULL\ LOAD}$, 6.5 V ≤ V_{IN} ≤ 20 V, –40°C ≤ T_J ≤ 125°C	4.900	5.000	5.100	
ΔV_{OUT}	Line Regulation (4)	LM1084-ADJ, I_{OUT} = 10 mA, 1.5 V ≤ (V_{IN} – V_{OUT}) ≤ 15 V		0.015%	0.2%	
		LM1084-ADJ, I_{OUT} = 10 mA, 1.5 V ≤ (V_{IN} – V_{OUT}) ≤ 15 V, –40°C ≤ T_J ≤ 125°C		0.035%	0.2%	
		LM1084-3.3, I_{OUT} = 0 mA, 4.8 V ≤ V_{IN} ≤ 15 V		0.5	6	mV
		LM1084-3.3, I_{OUT} = 0 mA, 4.8 V ≤ V_{IN} ≤ 15 V, –40°C ≤ T_J ≤ 125°C		1.0	6	
		LM1084-5.0, I_{OUT} = 0 mA, 6.5 V ≤ V_{IN} ≤ 20 V		0.5	10	mV
		LM1084-5.0, I_{OUT} = 0 mA, 6.5 V ≤ V_{IN} ≤ 20 V, –40°C ≤ T_J ≤ 125°C		1.0	10	
ΔV_{OUT}	Load Regulation (4)	LM1084-ADJ, (V_{IN} – V_{OUT}) = 3 V, 10 mA ≤ I_{OUT} ≤ $I_{FULL\ LOAD}$		0.1 %	0.3%	
		LM1084-ADJ, (V_{IN} – V_{OUT}) = 3 V, 10 mA ≤ I_{OUT} ≤ $I_{FULL\ LOAD}$, –40°C ≤ T_J ≤ 125°C		0.2%	0.4%	
		LM1084-3.3, V_{IN} = 5 V, 0 ≤ I_{OUT} ≤ $I_{FULL\ LOAD}$		3	15	mV
		LM1084-3.3, V_{IN} = 5 V, 0 ≤ I_{OUT} ≤ $I_{FULL\ LOAD}$, –40°C ≤ T_J ≤ 125°C		7	20	
		LM1084-5.0, V_{IN} = 8 V, 0 ≤ I_{OUT} ≤ $I_{FULL\ LOAD}$		5	20	mV
		LM1084-5.0, V_{IN} = 8 V, 0 ≤ I_{OUT} ≤ $I_{FULL\ LOAD}$, –40°C ≤ T_J ≤ 125°C		10	35	
	Dropout Voltage (5)	LM1084-ADJ, 3.3, 5, 12, ΔV_{REF}, ΔV_{OUT} = 1%, I_{OUT} = 5A, –40°C ≤ T_J ≤ 125°C		1.3	1.5	V
I_{LIMIT}	Current Limit	LM1084-ADJ, $V_{IN} - V_{OUT}$ = 5 V, –40°C ≤ T_J ≤ 125°C	5.5	8.0		A
		LM1084-ADJ, $V_{IN} - V_{OUT}$ = 25 V, –40°C ≤ T_J ≤ 125°C	0.3	0.6		
		LM1084-3.3, V_{IN} = 8 V, –40°C ≤ T_J ≤ 125°C	5.5	8.0		A
		LM1084-5.0, V_{IN} = 10 V, –40°C ≤ T_J ≤ 125°C	5.5	8.0		A
	Minimum Load Current (6)	LM1084-ADJ, $V_{IN} - V_{OUT}$ = 25 V		5	10.0	mA
	Quiescent Current	LM1084-3.3, V_{IN} = 18 V		5.0	10.0	mA
		LM1084-5.0, V_{IN} ≤ 20 V		5.0	10.0	mA
	Thermal Regulation	T_A = 25°C, 30 ms Pulse		0.003	0.015	%/W

(1) All limits are specified by testing or statistical analysis.
(2) Typical Values represent the most likely parametric norm.
(3) $I_{FULLLOAD}$ is defined in the current limit curves. The $I_{FULLLOAD}$ Curve defines the current limit as a function of input-to-output voltage. Note that 30W power dissipation for the LM1084 is only achievable over a limited range of input-to-output voltage.
(4) Load and line regulation are measured at constant junction temperature, and are ensured up to the maximum power dissipation of 30W. Power dissipation is determined by the input/output differential and the output current. ensured maximum power dissipation will not be available over the full input/output range.
(5) Dropout voltage is specified over the full output current range of the device.
(6) The minimum output current required to maintain regulation.

Copyright © 1999–2015, Texas Instruments Incorporated

Electrical Characteristics (continued)

Typicals and limits apply for T_J = 25°C unless specified otherwise.

	PARAMETER	TEST CONDITIONS	MIN (1)	TYP (2)	MAX (1)	UNIT
	Ripple Rejection	f_{RIPPLE} = 120 Hz, = C_{OUT} = 25 µF Tantalum, I_{OUT} = 5A				dB
		LM1084-ADJ, C_{ADJ}, = 25 µF, (V_{IN} − V_O) = 3 V, –40°C ≤ T_J ≤ 125°C	60	75		
		LM1084-3.3, V_{IN} = 6.3 V, –40°C ≤ T_J ≤ 125°C	60	72		dB
		LM1084-5.0, V_{IN} = 8 V, –40°C ≤ T_J ≤ 125°C	60	68		dB
	Adjust Pin Current	LM1084		55		µA
		LM1084, –40°C ≤ T_J ≤ 125°C			120	
	Adjust Pin Current Change	10 mA ≤ I_{OUT} ≤ $I_{FULL\ LOAD}$, 1.5 V ≤ V_{IN} − V_{OUT} ≤ 25 V, –40°C ≤ T_J ≤ 125°C		0.2	5	µA
	Temperature Stability	–40°C ≤ T_J ≤ 125°C		0.5%		
	Long Term Stability	T_A =125°C, 1000 Hrs		0.3%	1.0%	
	RMS Output Noise (% of V_{OUT})	10 Hz ≤ f≤ 10 kHz		0.003%		

Copyright © 1999–2015, Texas Instruments Incorporated

6.6 Typical Characteristics

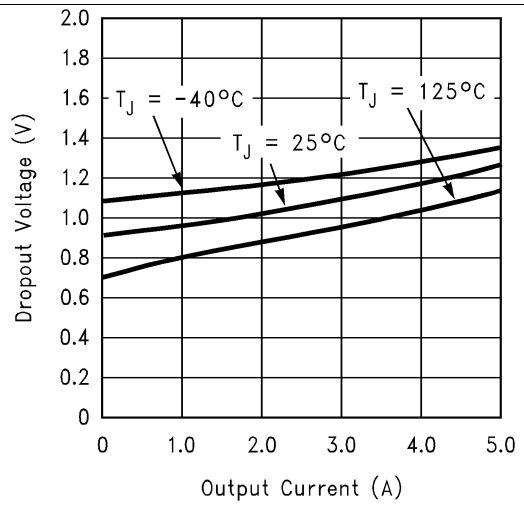

Figure 1. Dropout Voltage (V_{IN}−V_{OUT})

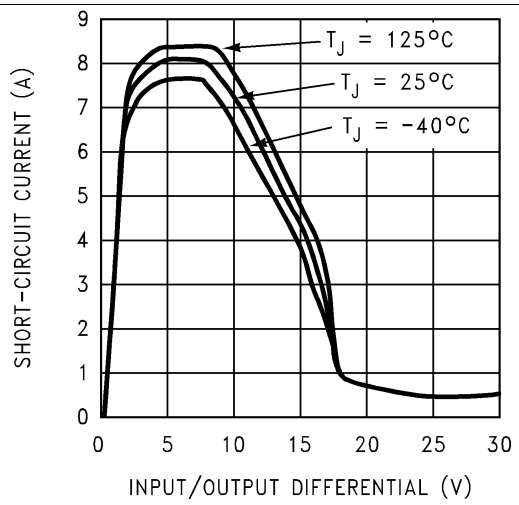

Figure 2. Short-Circuit Current

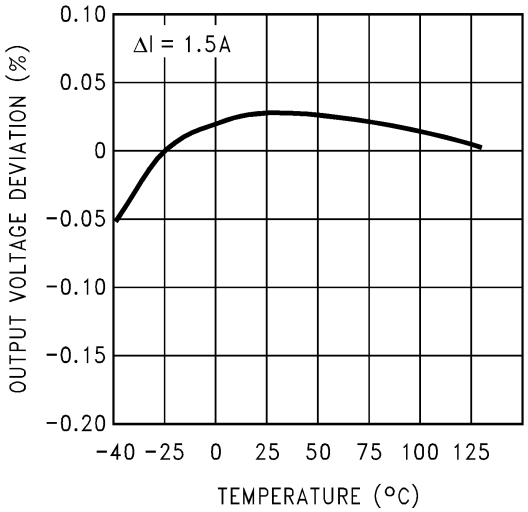

Figure 3. Load Regulation

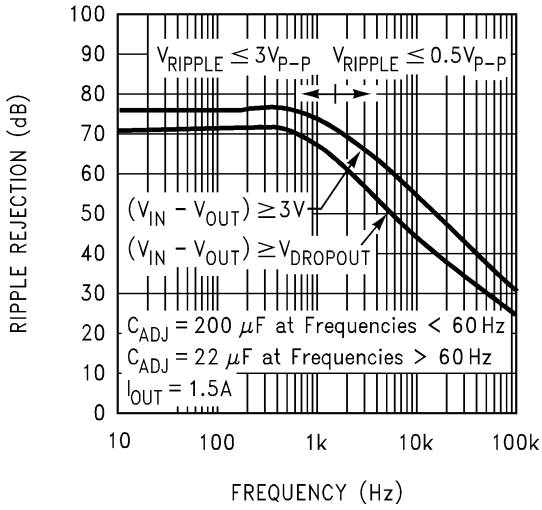

Figure 4. LM1084-ADJ Ripple Rejection

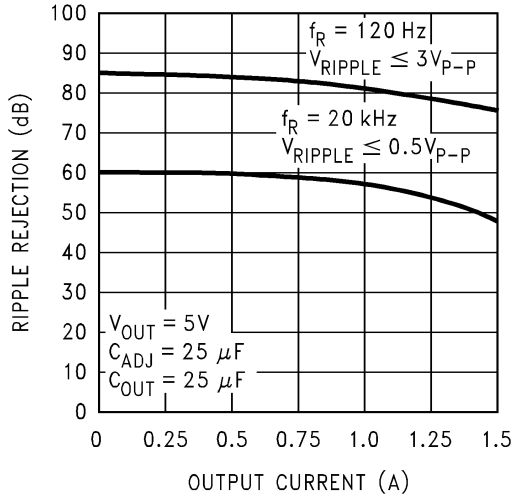

Figure 5. LM1084-ADJ Ripple Rejection vs Current

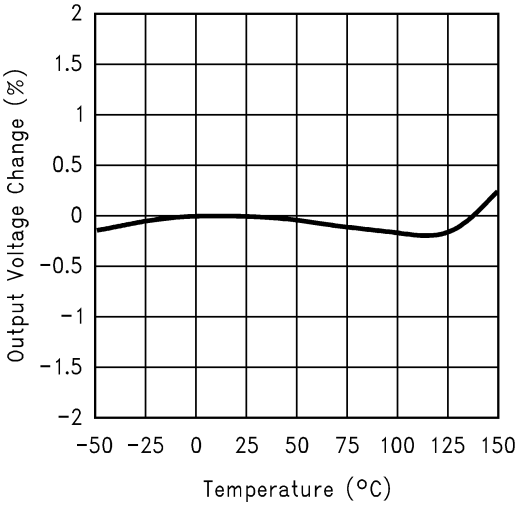

Figure 6. Temperature Stability

Typical Characteristics (continued)

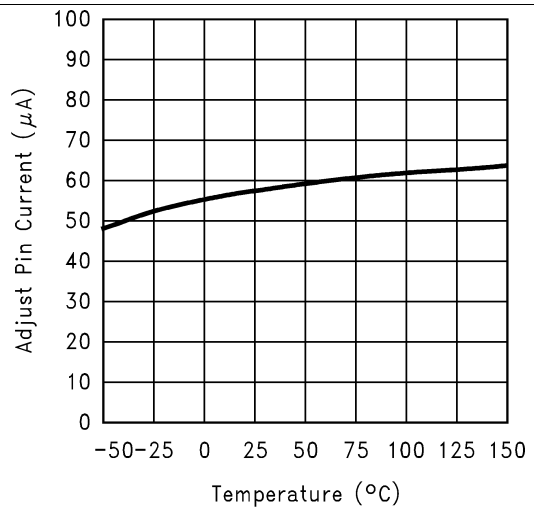

Figure 7. Adjust Pin Current

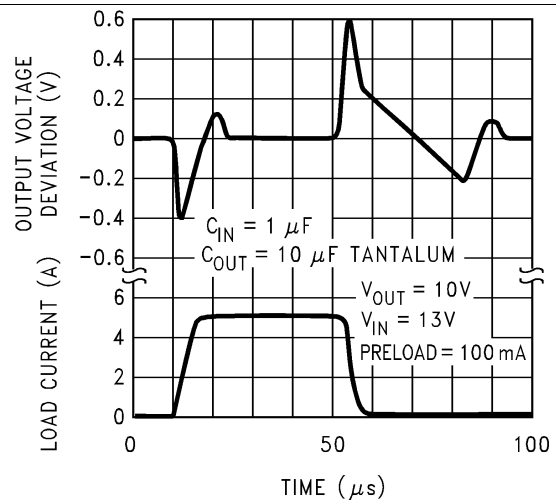

Figure 8. LM1084-ADJ Load Transient Response

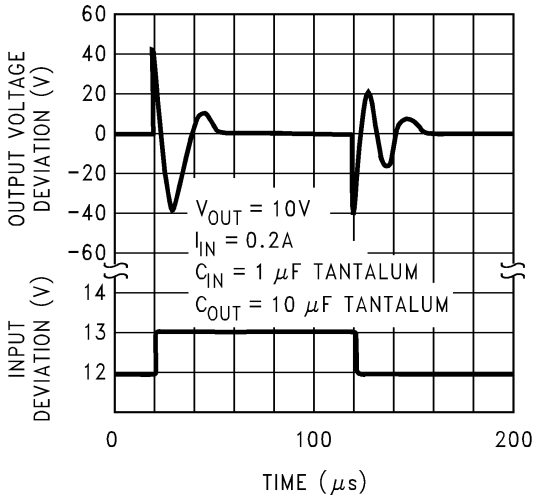

Figure 9. LM1084-ADJ LineTransient Response

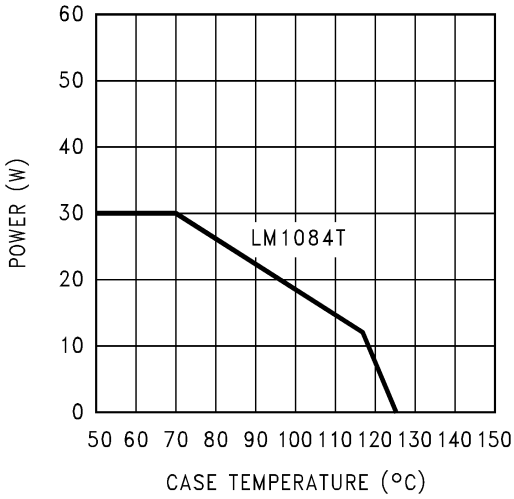

Figure 10. Maximum Power Dissipation

Copyright © 1999–2015, Texas Instruments Incorporated

7 Detailed Description

7.1 Overview

A basic functional diagram for the LM1084-ADJ (excluding protection circuitry) is shown in Figure 11. The topology is basically that of the LM317 except for the pass transistor. Instead of a Darlington NPN with its two diode voltage drop, the LM1084 uses a single NPN. This results in a lower dropout voltage. The structure of the pass transistor is also known as a quasi LDO. The advantage of a quasi LDO over a PNP LDO is its inherently lower quiescent current. The LM1084 is ensured to provide a minimum dropout voltage of 1.5-V over temperature, at full load.

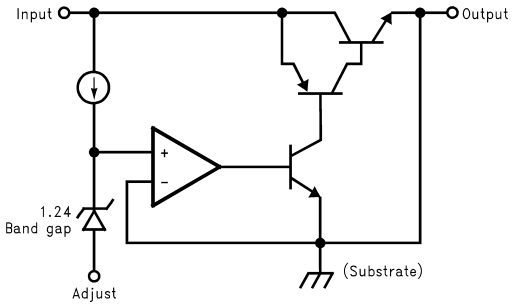

Figure 11. Basic Functional Diagram for the LM1084, Excluding Protection Circuitry

7.2 Functional Block Diagram

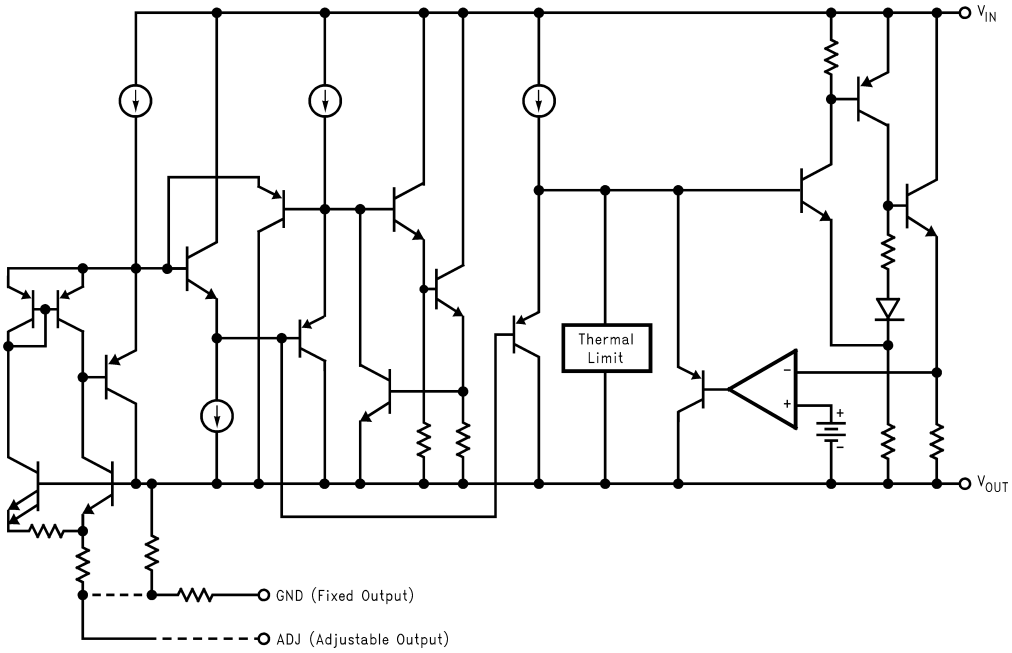

7.3 Feature Description

7.3.1 Ripple Rejection

Ripple rejection is a function of the open loop gain within the feed-back loop (refer to Figure 11 and Figure 14). The LM1084 exhibits 75dB of ripple rejection (typ.). When adjusted for voltages higher than V_{REF}, the ripple rejection decreases as a function of adjustment gain: (1+R1/R2) or V_O/V_{REF}. Therefore a 5-V adjustment decreases ripple rejection by a factor of four (−12dB); Output ripple increases as adjustment voltage increases.

Feature Description (continued)

However, the adjustable version allows this degradation of ripple rejection to be compensated. The adjust terminal can be bypassed to ground with a capacitor (C_{ADJ}). The impedance of the C_{ADJ} should be equal to or less than R1 at the desired ripple frequency. This bypass capacitor prevents ripple from being amplified as the output voltage is increased.

$$1/(2\pi \times f_{RIPPLE} * C_{ADJ}) \leq R_1 \quad (1)$$

7.3.2 Load Regulation

The LM1084 regulates the voltage that appears between its output and ground pins, or between its output and adjust pins. In some cases, line resistances can introduce errors to the voltage across the load. To obtain the best load regulation, a few precautions are needed.

Figure 12 shows a typical application using a fixed output regulator. Rt1 and Rt2 are the line resistances. V_{LOAD} is less than the V_{OUT} by the sum of the voltage drops along the line resistances. In this case, the load regulation seen at the R_{LOAD} would be degraded from the data sheet specification. To improve this, the load should be tied directly to the output pin on the positive side and directly tied to the ground pin on the negative side.

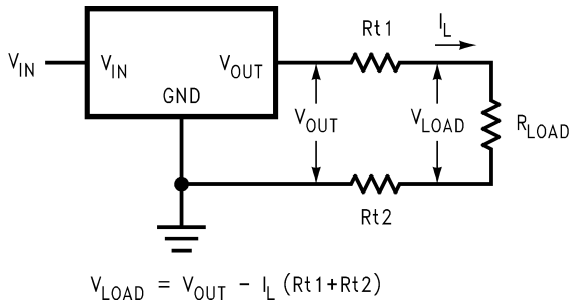

Figure 12. Typical Application Using Fixed Output Regulator

When the adjustable regulator is used (Figure 13), the best performance is obtained with the positive side of the resistor R1 tied directly to the output pin of the regulator rather than near the load. This eliminates line drops from appearing effectively in series with the reference and degrading regulation. For example, a 5-V regulator with 0.05Ω resistance between the regulator and load will have a load regulation due to line resistance of 0.05Ω × I_L. If R1 (= 125Ω) is connected near the load the effective line resistance will be 0.05Ω (1 + R2/R1) or in this case, it is 4 times worse. In addition, the ground side of the resistor R2 can be returned near the ground of the load to provide remote ground sensing and improve load regulation.

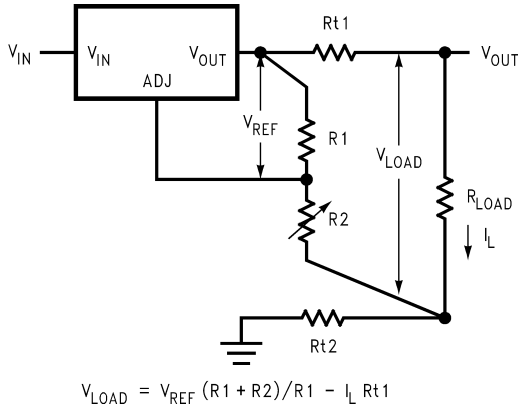

Figure 13. Best Load Regulation Using Adjustable Output Regulator

Copyright © 1999–2015, Texas Instruments Incorporated

Feature Description (continued)

7.3.3 Overload Recovery

Overload recovery refers to regulator's ability to recover from a short circuited output. A key factor in the recovery process is the current limiting used to protect the output from drawing too much power. The current limiting circuit reduces the output current as the input to output differential increases. Refer to short circuit curve in the *Typical Characteristics* section.

During normal start-up, the input to output differential is small because the output follows the input. But, if the output is shorted, then the recovery involves a large input to output differential. Sometimes during this condition the current limiting circuit is slow in recovering. If the limited current is too low to develop a voltage at the output, the voltage will stabilize at a lower level. Under these conditions it may be necessary to recycle the power of the regulator in order to get the smaller differential voltage and thus adequate start up conditions. Refer to *Typical Characteristics* section for the short circuit current vs. input differential voltage.

7.4 Device Functional Modes

7.4.1 Output Voltage

The LM1084 adjustable version develops a 1.25-V reference voltage, (V_{REF}), between the output and the adjust pin. As shown in Figure 14, this voltage is applied across resistor R1 to generate a constant current I1. This constant current then flows through R2. The resulting voltage drop across R2 adds to the reference voltage to sets the desired output voltage.

The current I_{ADJ} from the adjustment terminal introduces an output error. But because it is small (120 uA max), it becomes negligible when R1 is in the 100 Ω range.

For fixed voltage devices, R1 and R2 are integrated inside the devices.

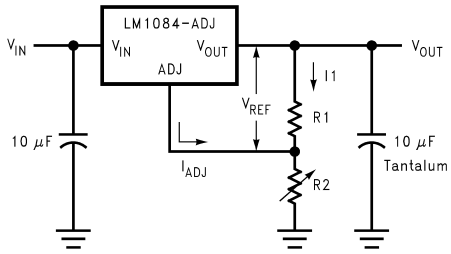

$$V_{OUT} = V_{REF}\left(1 + \frac{R2}{R1}\right) + I_{ADJ}\,R2$$

Figure 14. Basic Adjustable Regulator

7.4.2 Stability Consideration

Stability consideration primarily concerns the phase response of the feedback loop. In order for stable operation, the loop must maintain negative feedback. The LM1084 requires a certain amount series resistance with capacitive loads. This series resistance introduces a zero within the loop to increase phase margin and thus increase stability. The equivalent series resistance (ESR) of solid tantalum or aluminum electrolytic capacitors is used to provide the appropriate zero (approximately 500 kHz).

Aluminum electrolytics are less expensive than tantalums, but their ESR varies exponentially at cold temperatures; therefore requiring close examination when choosing the desired transient response over temperature. Tantalums are a convenient choice because their ESR varies less than 2:1 over temperature.

The recommended load/decoupling capacitance is a 10-uF tantalum or a 50-uF aluminum. These values will assure stability for the majority of applications.

The adjustable versions allow an additional capacitor to be used at the ADJ pin to increase ripple rejection. If this is done the output capacitor should be increased to 22 uF for tantalum or to 150 uF for aluminum.

Capacitors other than tantalum or aluminum can be used at the adjust pin and the input pin. A 10-uF capacitor is a reasonable value at the input. See *Ripple Rejection* section regarding the value for the adjust pin capacitor.

Copyright © 1999–2015, Texas Instruments Incorporated

Device Functional Modes (continued)

It is desirable to have large output capacitance for applications that entail large changes in load current (microprocessors for example). The higher the capacitance, the larger the available charge per demand. It is also desirable to provide low ESR to reduce the change in output voltage:

$$\Delta V = \Delta I \times ESR \quad (2)$$

It is common practice to use several tantalum and ceramic capacitors in parallel to reduce this change in the output voltage by reducing the overall ESR.

Output capacitance can be increased indefinitely to improve transient response and stability.

7.4.3 Protection Diodes

Under normal operation, the LM1084 regulator does not need any protection diode. With the adjustable device, the internal resistance between the adjustment and output terminals limits the current. No diode is needed to divert the current around the regulator even with a capacitor on the adjustment pin. The adjust pin can take a transient signal of ±25 V with respect to the output voltage without damaging the device.

When an output capacitor is connected to a regulator and the input is shorted, the output capacitor will discharge into the output of the regulator. The discharge current depends on the value of the capacitor, the output voltage of the regulator, and rate of decrease of V_{IN}. In the LM1084 regulator, the internal diode between the output and input pins can withstand microsecond surge currents of 10A to 20A. With an extremely large output capacitor (≥ 1000 µf), and with input instantaneously shorted to ground, the regulator could be damaged. In this case, an external diode is recommended between the output and input pins to protect the regulator, shown in Figure 15.

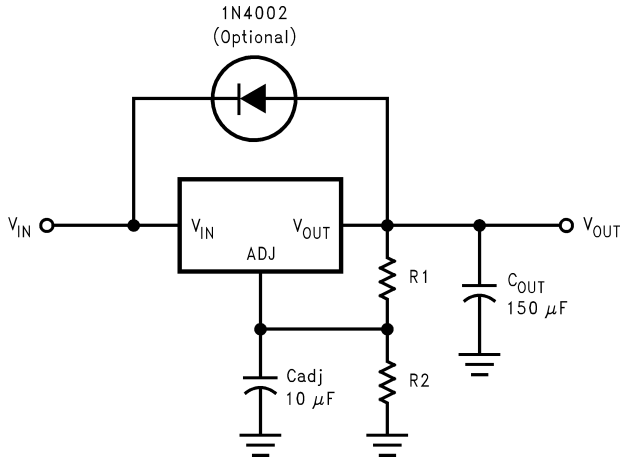

Figure 15. Regulator with Protection Diode

Copyright © 1999–2015, Texas Instruments Incorporated

8 Application and Implementation

NOTE

Information in the following applications sections is not part of the TI component specification, and TI does not warrant its accuracy or completeness. TI's customers are responsible for determining suitability of components for their purposes. Customers should validate and test their design implementation to confirm system functionality.

8.1 Application Information

The LM1084 is versatile in its applications, including uses in programmable output regulation and local on-card regulation. Or, by connecting a fixed resistor between the ADJUST and OUTPUT terminals, the LM1084 can function as a precision current regulator. An optional output capacitor can be added to improve transient response. The ADJUST terminal can be bypassed to achieve very high ripple-rejection ratios, which are difficult to achieve with standard three-terminal regulators. Please note, in the following applications, if ADJ is mentioned, it makes use of the adjustable version of the part, however, if GND is mentioned, it is the fixed voltage version of the part.

8.2 Typical Applications

8.2.1 1.2-V to 15-V Adjustable Regulator

This part can be used as a simple low drop out regulator to enable a variety of output voltages needed for demanding applications. By using an adjustable R2 resistor a variety of output voltages can be made possible as shown in Figure 16 based on the LM1084-ADJ.

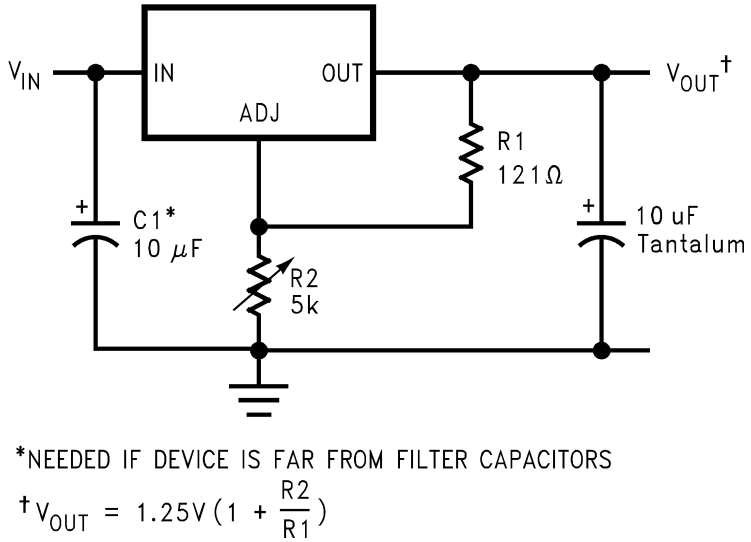

Figure 16. 1.2-V to 15-V Adjustable Regulator

8.2.1.1 Design Requirements

The device component count is very minimal, employing two resistors as part of a voltage divider circuit and an output capacitor for load regulation.

8.2.1.2 Detailed Design Procedure

The voltage divider for this part is set based on the equation shown in Figure 16, where R1 is the upper feedback resistor and R2 is the lower feedback resistor.

Typical Applications (continued)

8.2.1.3 Application Curve

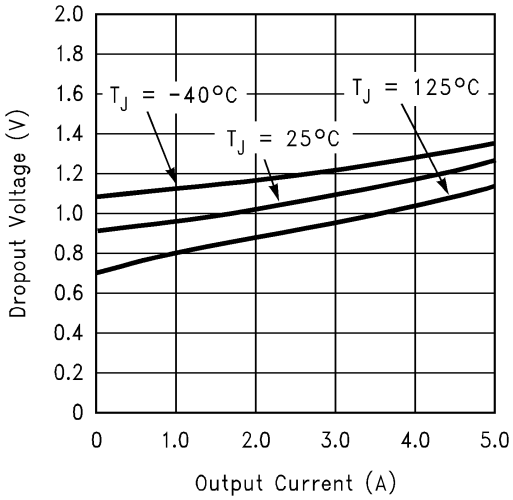

8.2.2 Adjustable at 5 V

The application shown in Figure 17 outlines a simple 5 V output application made possible by the LM1084-ADJ. This application can provide 5 A at high efficiencies and very low drop-out.

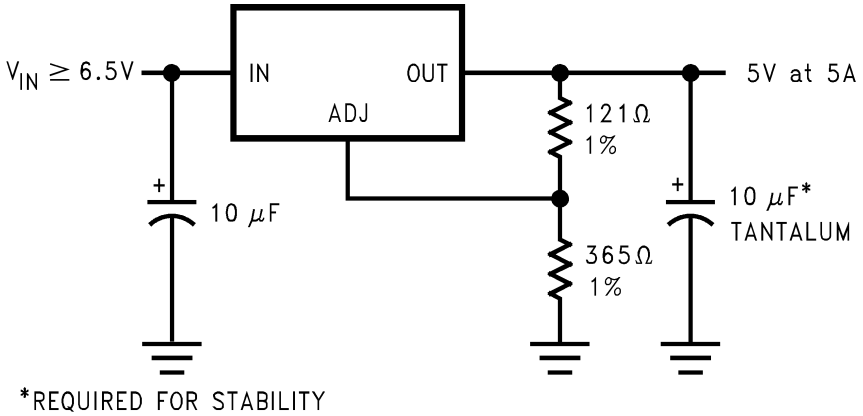

Figure 17. Adjustable @ 5 V

Copyright © 1999–2015, Texas Instruments Incorporated

Typical Applications (continued)

8.2.3 5-V Regulator With Shutdown

A variation of the 5 V output regulator application with shutdown control is shown in Figure 18 based on the LM1084-ADJ. It uses a simple NPN transistor on the ADJ pin to block or sink the current on the ADJ pin. If the TTL logic is pulled high, the NPN transistor is activated and the part is disabled, outputting approximately 1.25 V. If the TTL logic is pulled low, the NPN transistor is unbiased and the regulator functions normally.

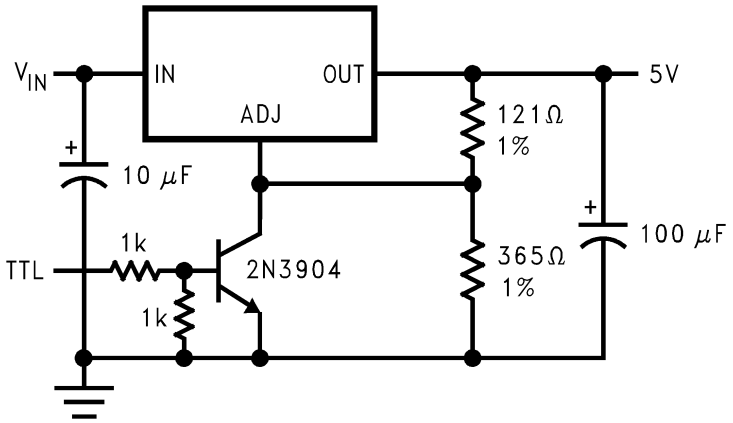

Figure 18. 5-V Regulator with Shutdown

8.2.4 Battery Charger

The LM1084-ADJ can be used as a battery charger to regulate the charging current required by the battery bank as shown in Figure 19. In this application the LM1084 acts as a constant voltage, constant current part by sensing the voltage potential across the battery and compensating it to the current voltage. To maintain this voltage, the regulator delivers the maximum charging current required to charge the battery. As the battery approaches the fully charged state, the potential drop across the sense resistor, R_S,reduces and the regulator throttles back the current to maintain the float voltage of the battery.

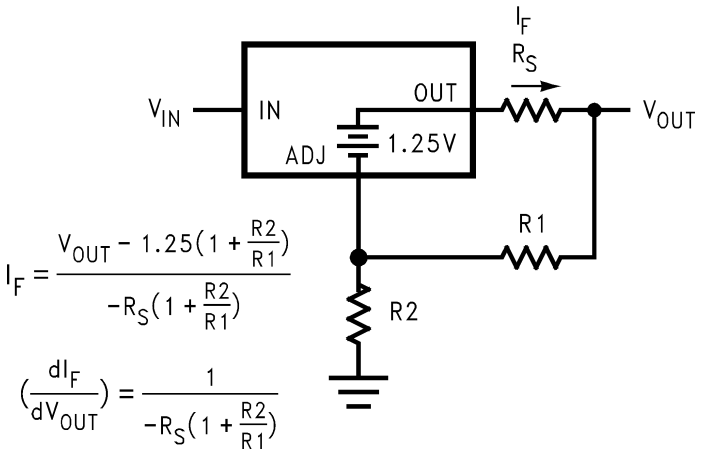

Figure 19. Battery Charger

Typical Applications (continued)

8.2.5 Adjustable Fixed Regulator

A simple adjustable, fixed range output regulator can be made possible by placing a variable resistor on the ground of the device as shown in Figure 20 based on the fixed output voltage LM1084-5.0. The GND pin has a small quiescent current of 5 mA typical. Increasing the resistance on the GND pin increases the voltage potential across the resistor. This potential is then mirrored on to the output to increase the total output voltage by the potential drop across the GND resistor.

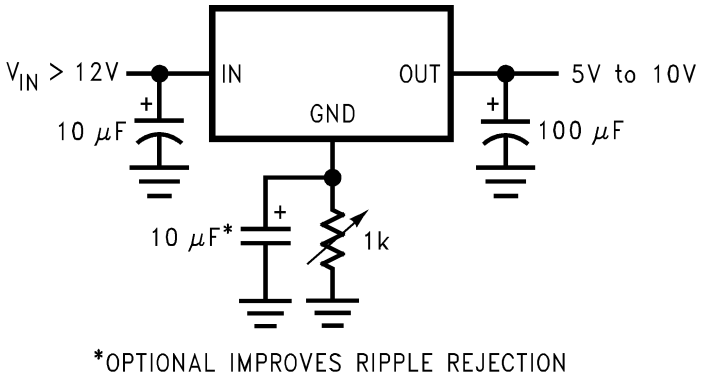

Figure 20. Adjustable Fixed Regulator

8.2.6 Regulator with Reference

A fixed output voltage version of the LM1084-5.0 can be employed to provide an output rail and a reference rail at the same time as shown in Figure 21. This simple application makes use of a reference diode, the LM136-5, to regulate the GND voltage to a fixed 5 V based on the quiescent current generated by the GND pin. This voltage is then added onto the output to generate a total of 10 V out.

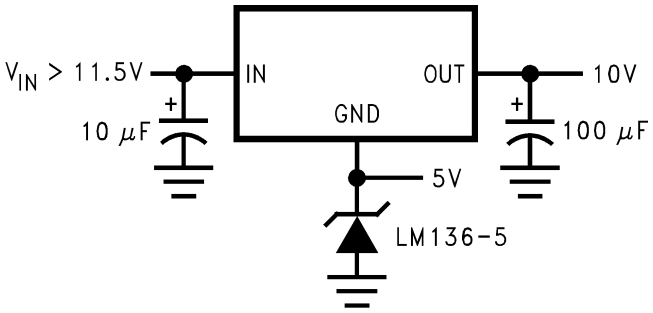

Figure 21. Regulator with Reference

Copyright © 1999–2015, Texas Instruments Incorporated

Typical Applications (continued)

8.2.7 High Current Lamp Driver Protection

A simple constant current source with protection can be designed by controlling the impedance between the lamp and ground. The LM1084-ADJ shown in Figure 22 makes use of an external TTL or CMOS input to drive the NPN transistor. This pulls the output of the regulator to a few tenths of a volt and puts the part into current limit. Releasing the logic will reduce the current flow across the lamp into the normal operating current thereby protecting the lamp during startup.

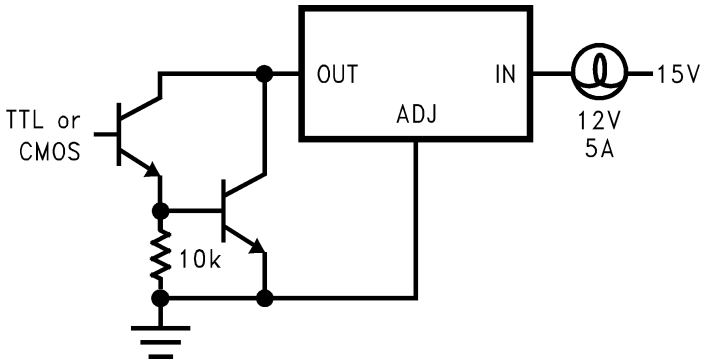

Figure 22. High Current Lamp Driver Protection

8.2.8 Battery Backup Regulated Supply

A regulated battery backup supply can be generated by using two fixed output voltage versions of the part as shown in Figure 23. The top regulator supplies the Line voltage during normal operation, however when the input is not available, the second regulator derives power from the battery backup and regulates it to 5 V based on the LM1084-5.0. The diodes prevent the rails from back feeding into the supply and batteries.

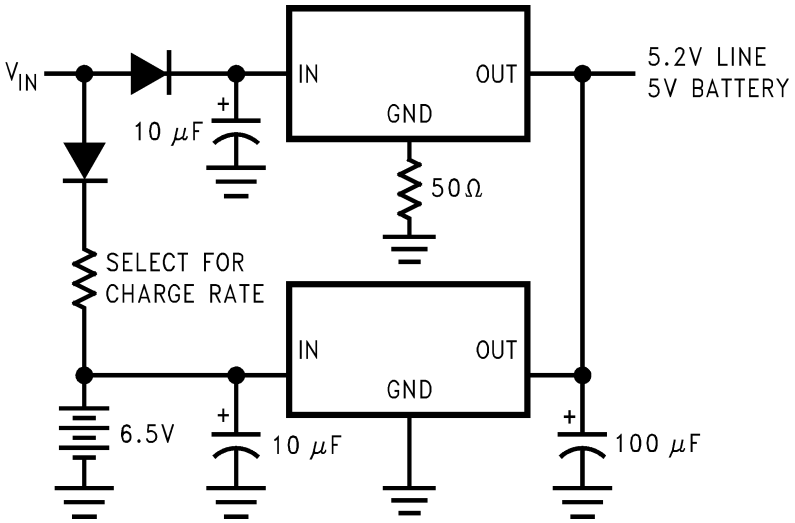

Figure 23. Battery Backup Regulated Supply

Typical Applications (continued)

8.2.9 Ripple Rejection Enhancement

A very simple ripple rejection circuit is shown in Figure 24 using the LM1084-ADJ. The capacitor C1 smooths out the ripple on the output by cleaning up the feedback path and preventing excess noise from feeding back into the regulator. Please remember X_{C1} should be approximately equal to R1 at the ripple frequency.

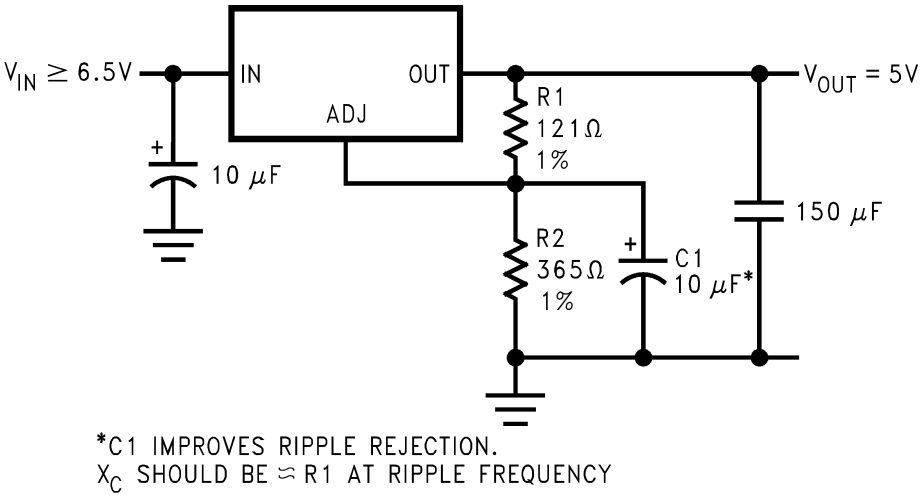

Figure 24. Ripple Rejection Enhancement

8.2.10 Automatic Light Control

A common street light control or automatic light control circuit is designed in Figure 25 based on the LM1084-ADJ. The photo transistor conducts in the presence of light and grounds the ADJ pin preventing the lamp from turning on. However, in the absence of light, the LM1084 regulates the voltage to 1.25V between OUT and ADJ, ensuring the lamp remains on.

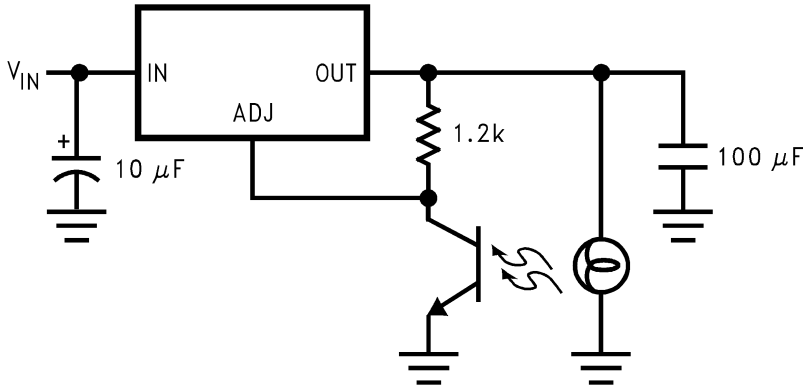

Figure 25. Automatic Light Control

Copyright © 1999–2015, Texas Instruments Incorporated

Typical Applications (continued)

8.2.11 Generating Negative Supply Voltage

A quick inverting output rail or negative output rail is shown in Figure 26 using the LM1084 fixed output part. By tying the output to GND, the GND node is at a relatively more negative potential than the output. This is then interfaced to the negative application such as an operational amplifier or any other rail needing negative voltage.

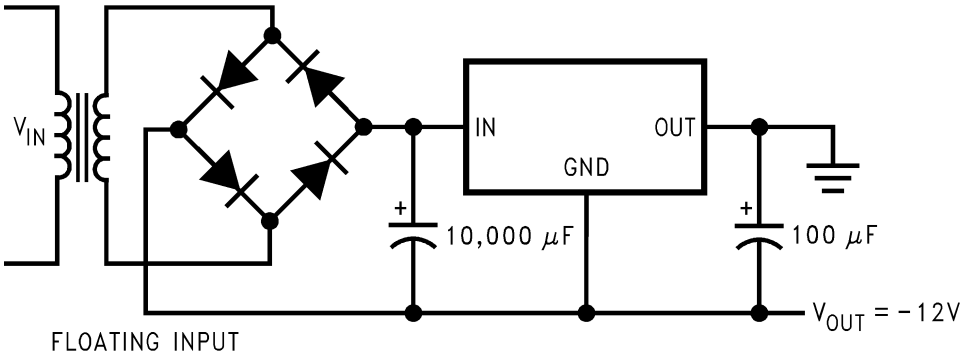

Figure 26. Generating Negative Supply Voltage

8.2.12 Remote Sensing

Remote sensing is a method of compensating the output voltage to a very precise degree by sensing the output and feeding it back through the feedback. The circuit implementing this is shown in Figure 27 using the LM1084-ADJ. The output of the regulator is fed into a voltage follower to avoid any loading effects and the output of the op-amp is injected into the top of the feedback resistor network. This has the effect of modulating the voltage to a precise degree without additional loading on the output.

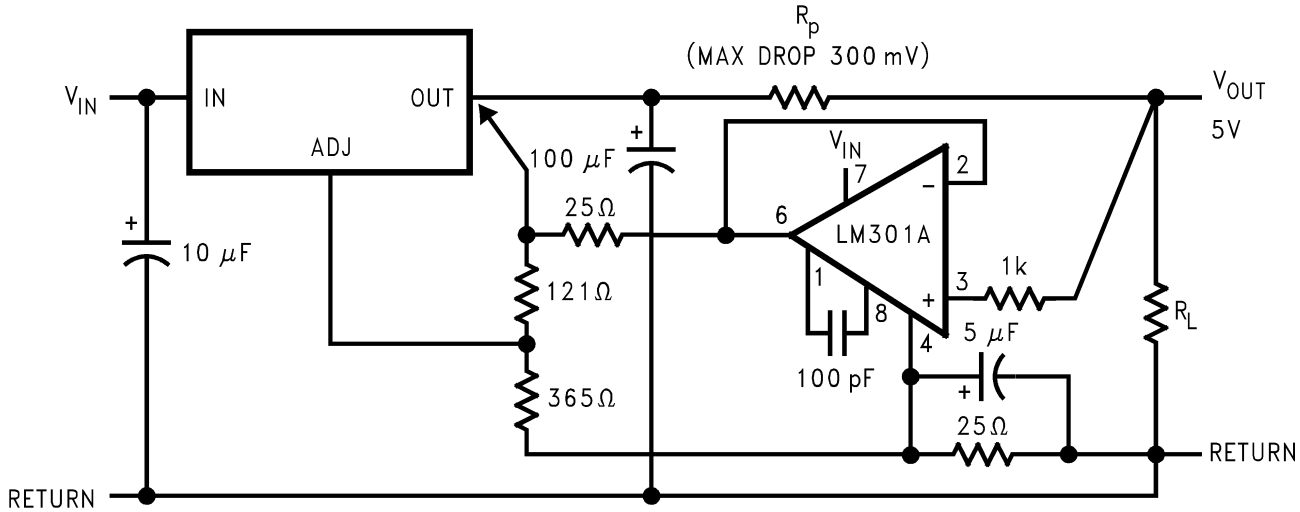

Figure 27. Remote Sensing

9 Power Supply Recommendations

The linear regulator input supply should be well regulated and kept at a voltage level such that the maximum input to output voltage differential allowed by the device is not exceeded. The minimum dropout voltage (V_{IN} – V_{OUT}) should be met with extra headroom when possible in order to keep the output well regulated. A 10 µF or higher capacitor should be placed at the input to bypass noise.

10 Layout

10.1 Layout Guidelines

For the best overall performance, some layout guidelines should be followed. Place all circuit components on the same side of the circuit board and as near as practical to the respective linear regulator pins. Traces should be kept short and wide to reduce the amount of parasitic elements into the system. The actual width and thickness of traces will depend on the current carrying capability and heat dissipation required by the end system. An array of plated vias can be placed on the pad area underneath the TAB to conduct heat to any inner plane areas or to a bottom-side copper plane.

10.2 Layout Example

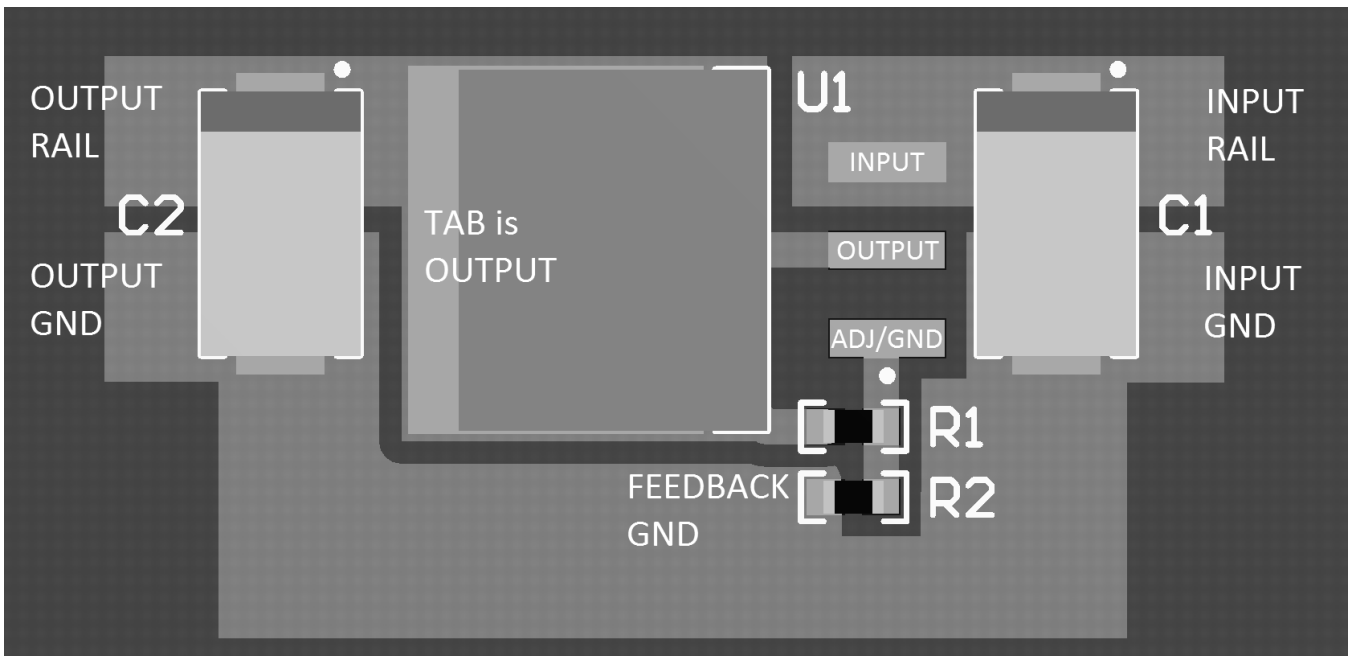

Figure 28. Layout Example

10.3 Thermal Considerations

ICs heats up when in operation, and power consumption is one factor in how hot it gets. The other factor is how well the heat is dissipated. Heat dissipation is predictable by knowing the thermal resistance between the IC and ambient (θ_{JA}). Thermal resistance has units of temperature per power (C/W). The higher the thermal resistance, the hotter the IC.

The LM1084 specifies the thermal resistance for each package as junction to case (θ_{JC}). In order to get the total resistance to ambient (θ_{JA}), two other thermal resistance must be added, one for case to heat-sink (θ_{CH}) and one for heatsink to ambient (θ_{HA}). The junction temperature can be predicted as follows:

$$T_J = T_A + P_D (\theta_{JC} + \theta_{CH} + \theta_{HA}) = T_A + P_D \theta_{JA} \quad (3)$$

T_J is junction temperature, T_A is ambient temperature, and P_D is the power consumption of the device. Device power consumption is calculated as follows:

Copyright © 1999–2015, Texas Instruments Incorporated

Thermal Considerations (continued)

$$I_{IN} = I_L + I_G \quad (4)$$

$$P_D = (V_{IN} - V_{OUT})\, I_L + V_{IN} I_G \quad (5)$$

Figure 29 shows the voltages and currents which are present in the circuit.

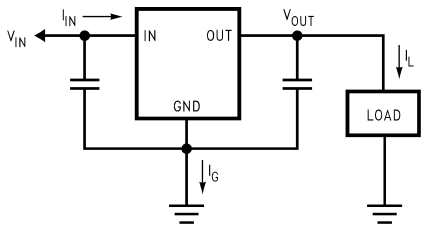

Figure 29. Power Dissipation Diagram

Once the devices power is determined, the maximum allowable ($\theta_{JA\ (max)}$) is calculated as:

$$\theta_{JA\ (max)} = T_{R(max)}/P_D = T_{J(max)} - T_{A(max)}/P_D \quad (6)$$

The LM1084 has different temperature specifications for two different sections of the IC: the control section and the output section. The *Thermal Information* table shows the junction to case thermal resistances for each of these sections, while the maximum junction temperatures ($T_{J(max)}$) for each section is listed in the *Absolute Maximum Ratings* section of the datasheet. $T_{J(max)}$ is 125°C for the control section, while $T_{J(max)}$ is 150°C for the output section.

$\theta_{JA\ (max)}$ should be calculated separately for each section as follows:

$$\theta_{JA}\ (\text{max, CONTROL SECTION}) = (125°C - T_{A(max)})/P_D \quad (7)$$

$$\theta_{JA}\ (\text{max, OUTPUT SECTION}) = (150°C - T_{A(max)})/P_D \quad (8)$$

The required heat sink is determined by calculating its required thermal resistance ($\theta_{HA\ (max)}$).

$$\theta_{HA\ (max)} = \theta_{JA\ (max)} - (\theta_{JC} + \theta_{CH}) \quad (9)$$

($\theta_{HA\ (max)}$) should also be calculated twice as follows:

$$(\theta_{HA\ (max)}) = \theta_{JA}\ (\text{max, CONTROL SECTION}) - (\theta_{JC}\ (\text{CONTROL SECTION}) + \theta_{CH}) \quad (10)$$

$$(\theta_{HA\ (max)}) = \theta_{JA}(\text{max, OUTPUT SECTION}) - (\theta_{JC}\ (\text{OUTPUT SECTION}) + \theta_{CH}) \quad (11)$$

If thermal compound is used, θ_{CH} can be estimated at 0.2 C/W. If the case is soldered to the heat sink, then a θ_{CH} can be estimated as 0 C/W.

After, $\theta_{HA\ (max)}$ is calculated for each section, choose the lower of the two $\theta_{HA\ (max)}$ values to determine the appropriate heat sink.

If PC board copper is going to be used as a heat sink, then Figure 30 can be used to determine the appropriate area (size) of copper foil required.

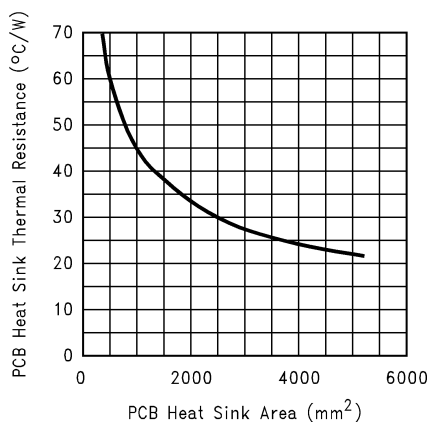

Figure 30. Heat Sink Thermal Resistance vs Area

11 Device and Documentation Support

11.1 Trademarks

All trademarks are the property of their respective owners.

11.2 Electrostatic Discharge Caution

These devices have limited built-in ESD protection. The leads should be shorted together or the device placed in conductive foam during storage or handling to prevent electrostatic damage to the MOS gates.

11.3 Glossary

SLYZ022 — *TI Glossary*.

This glossary lists and explains terms, acronyms, and definitions.

12 Mechanical, Packaging, and Orderable Information

The following pages include mechanical, packaging, and orderable information. This information is the most current data available for the designated devices. This data is subject to change without notice and revision of this document. For browser-based versions of this data sheet, refer to the left-hand navigation.

Copyright © 1999–2015, Texas Instruments Incorporated

PACKAGING INFORMATION

Orderable Device	Status (1)	Package Type	Package Drawing	Pins	Package Qty	Eco Plan (2)	Lead/Ball Finish (6)	MSL Peak Temp (3)	Op Temp (°C)	Device Marking (4/5)	Samples
LM1084IS-3.3/NOPB	ACTIVE	DDPAK/ TO-263	KTT	3	45	Pb-Free (RoHS Exempt)	CU SN	Level-3-245C-168 HR	-40 to 125	LM1084 IS-3.3	Samples
LM1084IS-5.0/NOPB	ACTIVE	DDPAK/ TO-263	KTT	3	45	Pb-Free (RoHS Exempt)	CU SN	Level-3-245C-168 HR	-40 to 125	LM1084 IS-5.0	Samples
LM1084IS-ADJ	NRND	DDPAK/ TO-263	KTT	3	45	TBD	Call TI	Call TI	-40 to 125	LM1084 IS-ADJ	
LM1084IS-ADJ/NOPB	ACTIVE	DDPAK/ TO-263	KTT	3	45	Pb-Free (RoHS Exempt)	CU SN	Level-3-245C-168 HR	-40 to 125	LM1084 IS-ADJ	Samples
LM1084ISX-3.3/NOPB	ACTIVE	DDPAK/ TO-263	KTT	3	500	Pb-Free (RoHS Exempt)	CU SN	Level-3-245C-168 HR	-40 to 125	LM1084 IS-3.3	Samples
LM1084ISX-5.0/NOPB	ACTIVE	DDPAK/ TO-263	KTT	3	500	Pb-Free (RoHS Exempt)	CU SN	Level-3-245C-168 HR	-40 to 125	LM1084 IS-5.0	Samples
LM1084ISX-ADJ/NOPB	ACTIVE	DDPAK/ TO-263	KTT	3	500	Pb-Free (RoHS Exempt)	CU SN	Level-3-245C-168 HR	-40 to 125	LM1084 IS-ADJ	Samples
LM1084IT-3.3/NOPB	ACTIVE	TO-220	NDE	3	45	Green (RoHS & no Sb/Br)	CU SN	Level-1-NA-UNLIM	-40 to 125	LM1084 IT-3.3	Samples
LM1084IT-5.0/NOPB	ACTIVE	TO-220	NDE	3	45	Green (RoHS & no Sb/Br)	CU SN	Level-1-NA-UNLIM	-40 to 125	LM1084 IT-5.0	Samples
LM1084IT-ADJ/NOPB	ACTIVE	TO-220	NDE	3	45	Green (RoHS & no Sb/Br)	CU SN	Level-1-NA-UNLIM	-40 to 125	LM1084 IT-ADJ	Samples

(1) The marketing status values are defined as follows:
ACTIVE: Product device recommended for new designs.
LIFEBUY: TI has announced that the device will be discontinued, and a lifetime-buy period is in effect.
NRND: Not recommended for new designs. Device is in production to support existing customers, but TI does not recommend using this part in a new design.
PREVIEW: Device has been announced but is not in production. Samples may or may not be available.
OBSOLETE: TI has discontinued the production of the device.

(2) Eco Plan - The planned eco-friendly classification: Pb-Free (RoHS), Pb-Free (RoHS Exempt), or Green (RoHS & no Sb/Br) - please check http://www.ti.com/productcontent for the latest availability information and additional product content details.
TBD: The Pb-Free/Green conversion plan has not been defined.
Pb-Free (RoHS): TI's terms "Lead-Free" or "Pb-Free" mean semiconductor products that are compatible with the current RoHS requirements for all 6 substances, including the requirement that lead not exceed 0.1% by weight in homogeneous materials. Where designed to be soldered at high temperatures, TI Pb-Free products are suitable for use in specified lead-free processes.
Pb-Free (RoHS Exempt): This component has a RoHS exemption for either 1) lead-based flip-chip solder bumps used between the die and package, or 2) lead-based die adhesive used between the die and leadframe. The component is otherwise considered Pb-Free (RoHS compatible) as defined above.
Green (RoHS & no Sb/Br): TI defines "Green" to mean Pb-Free (RoHS compatible), and free of Bromine (Br) and Antimony (Sb) based flame retardants (Br or Sb do not exceed 0.1% by weight in homogeneous material)

(3) MSL, Peak Temp. - The Moisture Sensitivity Level rating according to the JEDEC industry standard classifications, and peak solder temperature.

(4) There may be additional marking, which relates to the logo, the lot trace code information, or the environmental category on the device.

(5) Multiple Device Markings will be inside parentheses. Only one Device Marking contained in parentheses and separated by a "~" will appear on a device. If a line is indented then it is a continuation of the previous line and the two combined represent the entire Device Marking for that device.

(6) Lead/Ball Finish - Orderable Devices may have multiple material finish options. Finish options are separated by a vertical ruled line. Lead/Ball Finish values may wrap to two lines if the finish value exceeds the maximum column width.

Important Information and Disclaimer: The information provided on this page represents TI's knowledge and belief as of the date that it is provided. TI bases its knowledge and belief on information provided by third parties, and makes no representation or warranty as to the accuracy of such information. Efforts are underway to better integrate information from third parties. TI has taken and continues to take reasonable steps to provide representative and accurate information but may not have conducted destructive testing or chemical analysis on incoming materials and chemicals. TI and TI suppliers consider certain information to be proprietary, and thus CAS numbers and other limited information may not be available for release.

In no event shall TI's liability arising out of such information exceed the total purchase price of the TI part(s) at issue in this document sold by TI to Customer on an annual basis.

TAPE AND REEL INFORMATION

REEL DIMENSIONS

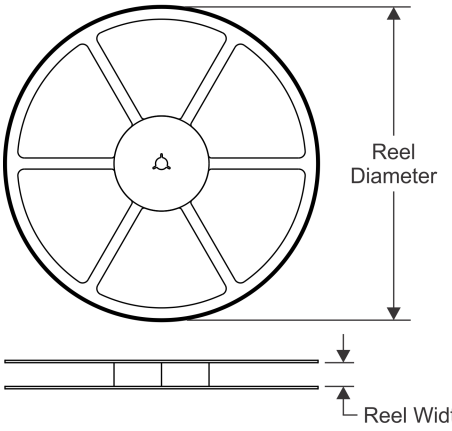

TAPE DIMENSIONS

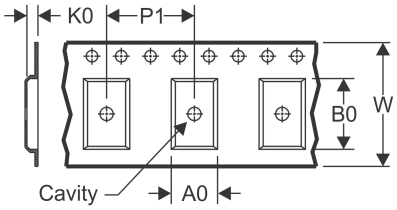

A0	Dimension designed to accommodate the component width
B0	Dimension designed to accommodate the component length
K0	Dimension designed to accommodate the component thickness
W	Overall width of the carrier tape
P1	Pitch between successive cavity centers

QUADRANT ASSIGNMENTS FOR PIN 1 ORIENTATION IN TAPE

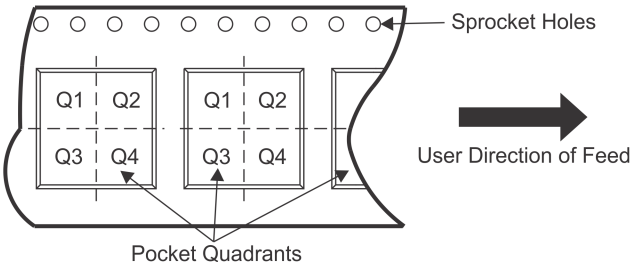

*All dimensions are nominal

Device	Package Type	Package Drawing	Pins	SPQ	Reel Diameter (mm)	Reel Width W1 (mm)	A0 (mm)	B0 (mm)	K0 (mm)	P1 (mm)	W (mm)	Pin1 Quadrant
LM1084ISX-3.3/NOPB	DDPAK/ TO-263	KTT	3	500	330.0	24.4	10.75	14.85	5.0	16.0	24.0	Q2
LM1084ISX-5.0/NOPB	DDPAK/ TO-263	KTT	3	500	330.0	24.4	10.75	14.85	5.0	16.0	24.0	Q2
LM1084ISX-ADJ/NOPB	DDPAK/ TO-263	KTT	3	500	330.0	24.4	10.75	14.85	5.0	16.0	24.0	Q2

TAPE AND REEL BOX DIMENSIONS

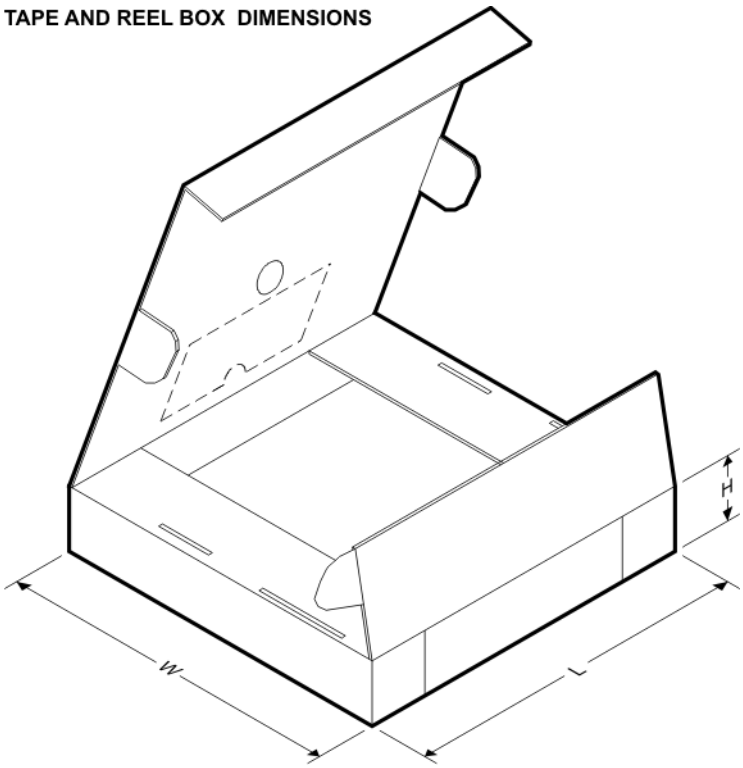

*All dimensions are nominal

Device	Package Type	Package Drawing	Pins	SPQ	Length (mm)	Width (mm)	Height (mm)
LM1084ISX-3.3/NOPB	DDPAK/TO-263	KTT	3	500	367.0	367.0	45.0
LM1084ISX-5.0/NOPB	DDPAK/TO-263	KTT	3	500	367.0	367.0	45.0
LM1084ISX-ADJ/NOPB	DDPAK/TO-263	KTT	3	500	367.0	367.0	45.0

NDE0003B

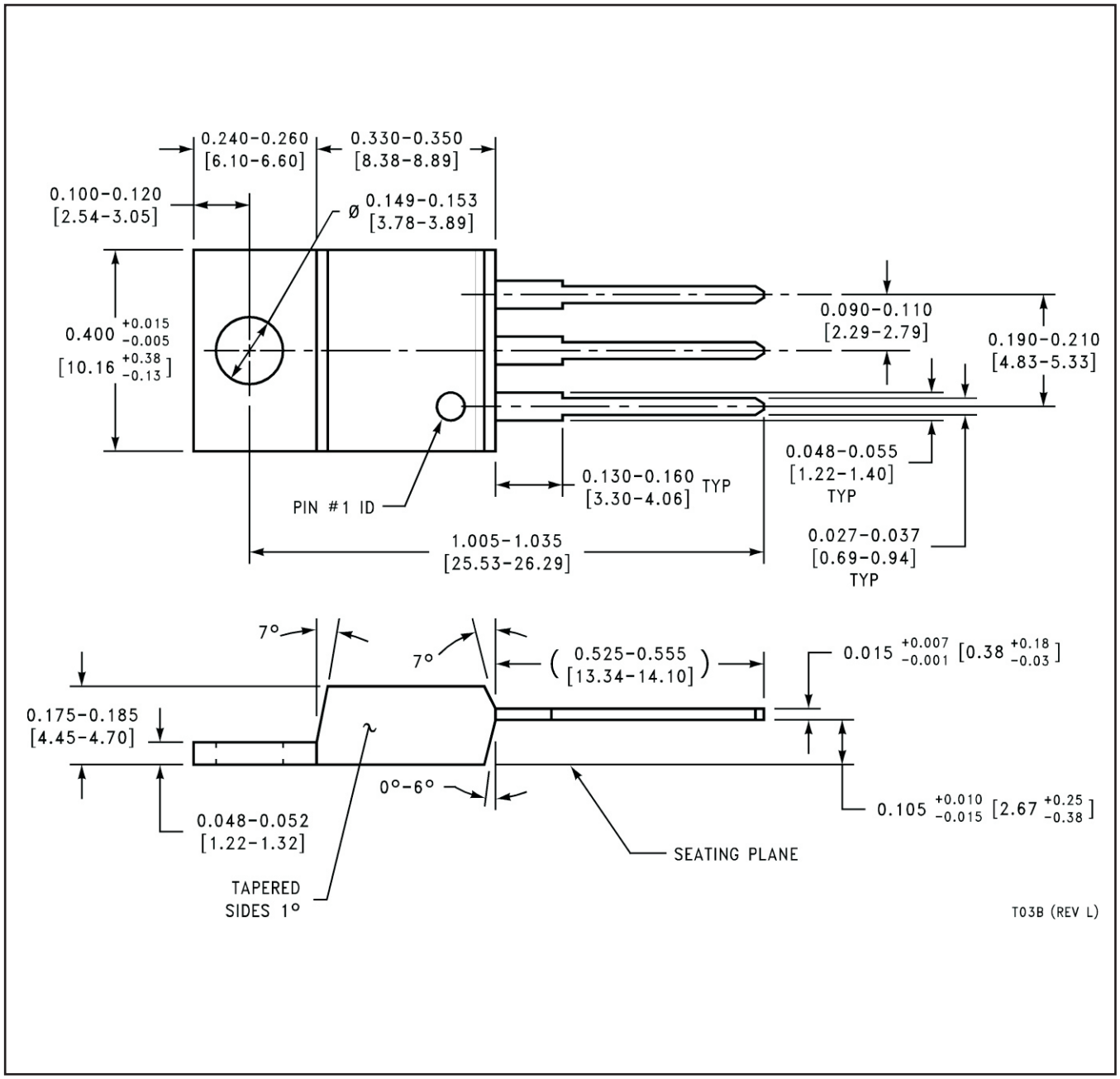
0.240-0.260
[6.10-6.60]
0.330-0.350
[8.38-8.89]
0.100-0.120
[2.54-3.05]
Ø 0.149-0.153
[3.78-3.89]
0.400 +0.015 -0.005
[10.16 +0.38 -0.13]
0.090-0.110
[2.29-2.79]
0.190-0.210
[4.83-5.33]
0.048-0.055
[1.22-1.40]
TYP
0.130-0.160 TYP
[3.30-4.06]
PIN #1 ID
1.005-1.035
[25.53-26.29]
0.027-0.037
[0.69-0.94]
TYP
7°
7°
(0.525-0.555)
[13.34-14.10]
0.015 +0.007 -0.001 [0.38 +0.18 -0.03]
0.175-0.185
[4.45-4.70]
0°-6°
0.105 +0.010 -0.015 [2.67 +0.25 -0.38]
0.048-0.052
[1.22-1.32]
SEATING PLANE
TAPERED
SIDES 1°
T03B (REV L)

KTT0003B

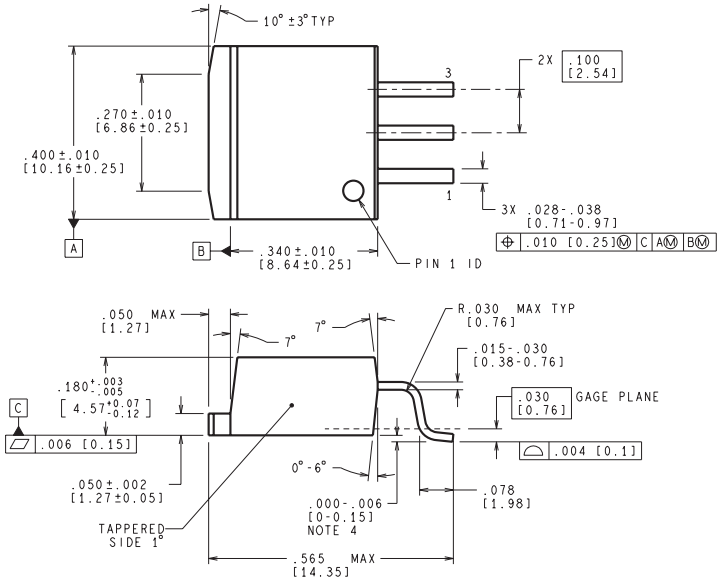

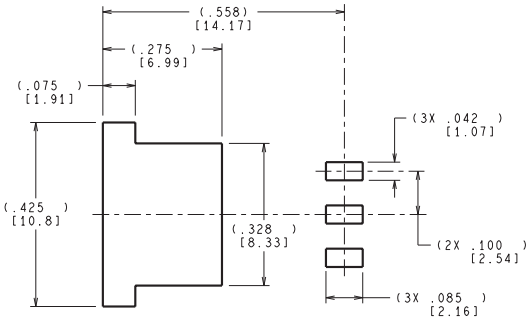

LAND PATTERN RECOMMENDATION

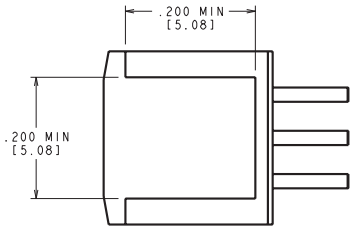

BOTTOM SIDE OF PACKAGE

CONTROLLING DIMENSION IS INCH
VALUES IN [ ] ARE MILLIMETERS
DIMENSIONS IN ( ) FOR REFERENCE ONLY

TS3B (Rev F)

IMPORTANT NOTICE

Texas Instruments Incorporated and its subsidiaries (TI) reserve the right to make corrections, enhancements, improvements and other changes to its semiconductor products and services per JESD46, latest issue, and to discontinue any product or service per JESD48, latest issue. Buyers should obtain the latest relevant information before placing orders and should verify that such information is current and complete. All semiconductor products (also referred to herein as “components”) are sold subject to TI’s terms and conditions of sale supplied at the time of order acknowledgment.

TI warrants performance of its components to the specifications applicable at the time of sale, in accordance with the warranty in TI’s terms and conditions of sale of semiconductor products. Testing and other quality control techniques are used to the extent TI deems necessary to support this warranty. Except where mandated by applicable law, testing of all parameters of each component is not necessarily performed.

TI assumes no liability for applications assistance or the design of Buyers’ products. Buyers are responsible for their products and applications using TI components. To minimize the risks associated with Buyers’ products and applications, Buyers should provide adequate design and operating safeguards.

TI does not warrant or represent that any license, either express or implied, is granted under any patent right, copyright, mask work right, or other intellectual property right relating to any combination, machine, or process in which TI components or services are used. Information published by TI regarding third-party products or services does not constitute a license to use such products or services or a warranty or endorsement thereof. Use of such information may require a license from a third party under the patents or other intellectual property of the third party, or a license from TI under the patents or other intellectual property of TI.

Reproduction of significant portions of TI information in TI data books or data sheets is permissible only if reproduction is without alteration and is accompanied by all associated warranties, conditions, limitations, and notices. TI is not responsible or liable for such altered documentation. Information of third parties may be subject to additional restrictions.

Resale of TI components or services with statements different from or beyond the parameters stated by TI for that component or service voids all express and any implied warranties for the associated TI component or service and is an unfair and deceptive business practice. TI is not responsible or liable for any such statements.

Buyer acknowledges and agrees that it is solely responsible for compliance with all legal, regulatory and safety-related requirements concerning its products, and any use of TI components in its applications, notwithstanding any applications-related information or support that may be provided by TI. Buyer represents and agrees that it has all the necessary expertise to create and implement safeguards which anticipate dangerous consequences of failures, monitor failures and their consequences, lessen the likelihood of failures that might cause harm and take appropriate remedial actions. Buyer will fully indemnify TI and its representatives against any damages arising out of the use of any TI components in safety-critical applications.

In some cases, TI components may be promoted specifically to facilitate safety-related applications. With such components, TI’s goal is to help enable customers to design and create their own end-product solutions that meet applicable functional safety standards and requirements. Nonetheless, such components are subject to these terms.

No TI components are authorized for use in FDA Class III (or similar life-critical medical equipment) unless authorized officers of the parties have executed a special agreement specifically governing such use.

Only those TI components which TI has specifically designated as military grade or “enhanced plastic” are designed and intended for use in military/aerospace applications or environments. Buyer acknowledges and agrees that any military or aerospace use of TI components which have ***not*** been so designated is solely at the Buyer's risk, and that Buyer is solely responsible for compliance with all legal and regulatory requirements in connection with such use.

TI has specifically designated certain components as meeting ISO/TS16949 requirements, mainly for automotive use. In any case of use of non-designated products, TI will not be responsible for any failure to meet ISO/TS16949.

Products		**Applications**	
Audio	www.ti.com/audio	Automotive and Transportation	www.ti.com/automotive
Amplifiers	amplifier.ti.com	Communications and Telecom	www.ti.com/communications
Data Converters	dataconverter.ti.com	Computers and Peripherals	www.ti.com/computers
DLP® Products	www.dlp.com	Consumer Electronics	www.ti.com/consumer-apps
DSP	dsp.ti.com	Energy and Lighting	www.ti.com/energy
Clocks and Timers	www.ti.com/clocks	Industrial	www.ti.com/industrial
Interface	interface.ti.com	Medical	www.ti.com/medical
Logic	logic.ti.com	Security	www.ti.com/security
Power Mgmt	power.ti.com	Space, Avionics and Defense	www.ti.com/space-avionics-defense
Microcontrollers	microcontroller.ti.com	Video and Imaging	www.ti.com/video
RFID	www.ti-rfid.com		
OMAP Applications Processors	www.ti.com/omap	**TI E2E Community**	e2e.ti.com
Wireless Connectivity	www.ti.com/wirelessconnectivity		

Mailing Address: Texas Instruments, Post Office Box 655303, Dallas, Texas 75265
Copyright © 2016, Texas Instruments Incorporated

Looking for pricing, stock, or lifecycle information?

Click below to explore more details on WIN SOURCE:

- View LM1084IS-12/NOPB on WIN SOURCE
- Texas Instruments Information

Optimize Your Supply Chain with WIN SOURCE Solutions

- Global Sourcing Solution
- Obsolete Management
- Cost Control Management
- Shortage Management
- Alternative Solution
- Excess Inventory Management