THE DATASHEET OF

PT4801C

www.win-source.net 0086-755-83957316

PT4801—48V

25-W Triple Output Isolated DC/DC Converter for DSL Applications

EXCALIBUR

SLTS143A

(Revised 1/29/2002)

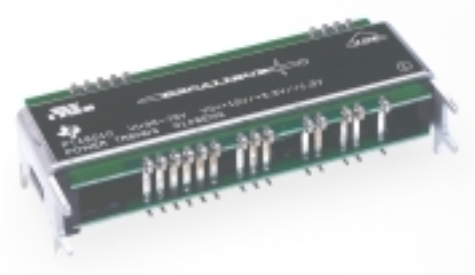

Features

- DSL Triple Outputs: +15V, +3.3V, +1.5V (Independantly Regulated)
- Input Voltage Range: 36V to 75V
- 1500VDC Isolation
- On/Off "Standby" Control
- Current Limit
- Short Circuit Protection (All Outputs)
- Fixed Frequency Operation
- Over-Temperature Shutdown
- Under-Voltage Lockout
- Space Saving Package: 1.6 sq. in. PCB Area (suffix N)
- Solderable Copper Case
- Safety Agency Approvals:
  UL 60950
  CSA C22.2 60950
  VDE EN60950

Description

The PT4801 Excalibur™ module is an isolated triple-output DC/DC converter that provides +15V, +3.3V, and +1.5V power supply voltages from a standard (-48V) telecom central office (CO) supply. A typical application is a chip-set for an 8 or 16-channel ADSL/DSL line card, or other mixed signal circuitry. The output voltage combination provides power for a processor core, digital logic, and analog support circuitry. The Vo_2 and Vo_3 outputs are also designed to meet the power-up/down sequencing requirements of popular DSP ICs.

The PT4801 is housed in a space-saving solderable copper case. A heatsink is not required. The vertical configuration occupies only 1.6 in² of PCB area.

Ordering Information

PT4801❑ = +15/+3.3/+1.5 Volts

PT Series Suffix (PT1234x)

Case/Pin Configuration	Order Suffix	Package Code
Vertical	**N**	(ENJ)
Horizontal	**A**	(ENK)
SMD	**C**	(ENL)

(Reference the applicable package code drawing for the dimensions and PC board layout)

Pin-Out Information

Pin	Function	Pin	Function
1	Remote (On/Off)	11	COM
2	No Pin	12	Vo_2 Adjust
3	$-V_{in}$	13	No Pin
4	$-V_{in}$	14	Vo_2
5	N/C	15	Vo_2
6	$+V_{in}$	16	COM
7	$+V_{in}$	17	COM
8	No Pin	18	Vo_3
9	No Pin	19	Vo_3 Adjust
10	Vo_1	20	No Pin

Typical Application

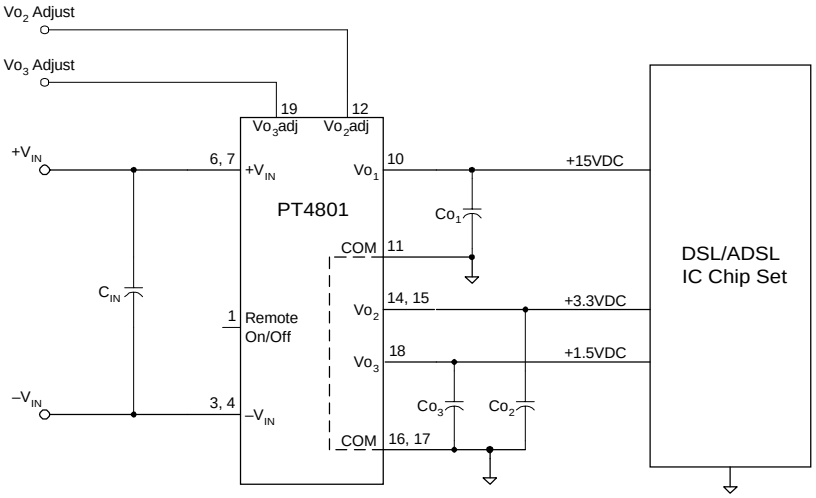

C_{in} = Optional 33µF
Co_1/Co_2 = Optional 10µF to 330µF per output. (See note 6)

Electrical Specifications (Unless otherwise stated, T_a =25°C, V_{in} =48V, C_{in} =0µF, C_{out} =0µF, and I_o =$I_o$typ)

Characteristics	Symbols	Conditions		PT4801 SERIES Min	Typ	Max	Units
Output Power	P_o	Each output:	Vo_1 (15V)	—	15	18.75 (1)	W
			Vo_2 (3.3V)	—	6.6	9.9 (1)	
			Vo_3 (1.5V)	—	2.25	3.0 (1)	
		All three outputs:		—	—	25 (1)	W
Output Current	I_o		Vo_1 (15V)	0	1.0	1.25	A
		(Io_1 >0.25A)	Vo_2 (3.3V)	0	2.0	3.0 (2)	A
			Vo_3 (1.5V)	0	1.5	2.0 (2)	
		(Io_1 ≤0.25A)	Vo_2 (3.3V)	0	—	2.0 (2)	A
			Vo_3 (1.5V)	0	—	1.5 (2)	
		Maximum (Io_1 + Io_2 + Io_3)		—	—	6.0 (3)	A
Input Voltage Range	V_{in}	Continuous		36	—	75	V
		Surge (1 minute)		—	—	80	V
Set-point Voltage Tolerance	V_o tol		Vo_1	15.0	—	15.75	V
			Vo_2	3.25	3.3	3.35	
			Vo_3	1.45	1.5	1.55	
Temperature Variation	Reg_{temp}	–40° ≤T_a ≤ +85°C, I_o =$I_o$min		—	±0.5	—	%V_o
Line Regulation	Reg_{line}	All outputs, Over V_{in} range, I_o =$I_o$typ		—	0.5	1.0	%V_o
Load Regulation	Reg_{load}	All outputs, I_o =10% to 100%$I_o$max		—	0.5	1.0	%V_o
Total Output Voltage Variation	ΔV_o tot	Includes set-point, line load, –40°C ≤T_a ≤ +85°C	Vo_1	15.0	—	15.75	V
			Vo_2	3.2	3.3	3.4	
			Vo_3	1.4	1.5	1.6	
Efficiency	η	Io_1 =0.5A, Io_2 =1.0A, Io_3 =1.0A		—	78	—	%
		Io_1 =1.0A, Io_2 =3.0A, Io_3 =2.0A		—	81	—	
V_o Ripple (pk-pk)	V_r	20–20Mz bandwidth, I_o =$I_o$typ	Vo_1	—	75	150	mV_{pp}
			Vo_2	—	33	50	
			Vo_3	—	30	50	
Transient Response	t_{tr}	25% load step from I_o ≥0.5$I_o$typ		—	300	—	µSec
	V_{os}	V_o over/undershoot	Vo_1	—	3	5	%V_o
			Vo_2	—	100	150	mVpp
			Vo_3	—	100	150	
Output Voltage Adjust	$V_o$adj		Vo2	3.135	—	3.465	V
			Vo3	1.425	—	1.5 (4)	
Switching Frequency	f_s	Over V_{in} and I_o ranges		550	650	750	kHz
Under-Voltage Lockout	UVLO	V_{in} increasing		—	34	—	V
		V_{in} decreasing		—	33	—	
Remote On/Off (Pin x)		Referenced to –V_{in} (pin 1)					
Input High Voltage	V_{IH}			2.5	—	15 (5)	V
Input Low Voltage	V_{IL}			–0.2	—	+0.8	
Input Low Current	I_{IL}			—	–10	—	µA
Standby Input Current	I_{in} standby	pins 1 & 2 connected		—	8	16	mA
Internal Input Capacitance	C_{in}			—	0.76	—	µF
External Output Capacitance	Co_1,		Vo_1	0	—	330 (6)	µF
	Co_2, Co_3		Vo_2 & Vo_3 (each)	0	—	330 (6)	
Isolation Voltage		Input–output/input–case		1500	—	—	V
Capacitance		Input to output		—	3000	—	pF
Resistance		Input to output		10	—	—	MΩ
Operating Temperature Range	T_a	Over V_{in} Range		–40	—	+85 (7)	°C
Case Temperature						+100	°C
Over Temperature Protection	OTP			+125			°C
Storage Temperature	T_s	—		–40	—	+125	°C
Mechanical Shock Mil-STD-883D,		Method 2002.3 1 msec, ½ Sine, mounted		—	500	—	G's
Mechanical Vibration Mil-STD-883D		Method 2007.2, 20-2000 Hz, Soldered	Suffixes A, C	—	20 (8	—	G's
Weight	—	Vertical/Horizontal		—	50	—	grams
Flammability	—	Meets UL 94V-O					

Notes: *(1) The sum-total power delivered from all three output, Vo_1, Vo_2, and Vo_3 cannot exceed 25 watts.*
(2) When the load current from Vo_1 is less than 0.25A, the maximum current available from Vo_2, and Vo_3 is reduced to 2A and 1.5A respectively.
(3) The sum-total current from all three outputs Vo_1, Vo_2, and Vo_3 cannot exceed 6Adc.
(4) Vo_3 cannot be adjusted higher than the nominal output voltage. Consult the applicable application note for information on output voltage adjusment.
(5) The Remote On/Off input has an internal pull-up. If left open circuit the PT4801 will operate when input power is applied. A low-leakage (<100nA). MOSFET is recommended to control this input. The open-circuit voltage is less than 10V. See application notes for interface considerations.
(6) External output capacitance is not required for proper operation. Up to 100µF of external capacitance may be added to each output to improve the response to load transients. Do not exceed 330µF at any one output. Allowances must be made for load circuit capacitance and the total external capacitor tolerance. Excessive output capacitance will affect converter start up. Low ESR capacitors, including Os-con® and tantalum types, may be used.
(7) See Safe Operating Area curves, or consult the factory for the appriopriate derating.
(8) The case pins on the through-hole package types (suffixes A & N) must be soldered. For more information, see the applicable package outline drawing.

PT4801 Characteristic Data (See Note A)

Efficiency vs Output Current

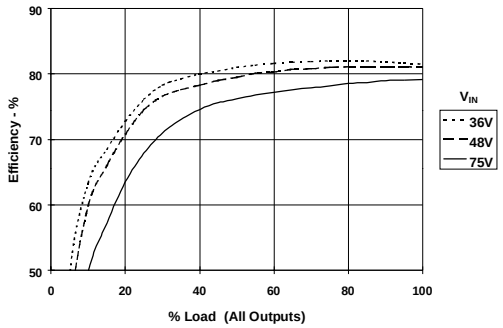

Load Regulation vs Output Current; V_o1 =+15V

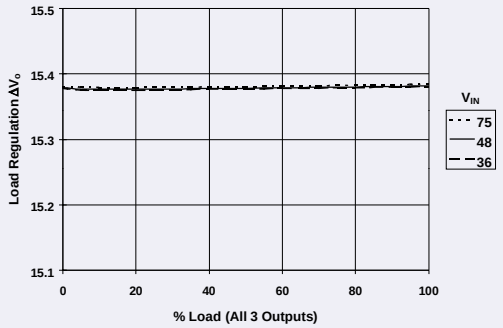

Ripple vs Output Current; @V_{in} =48V

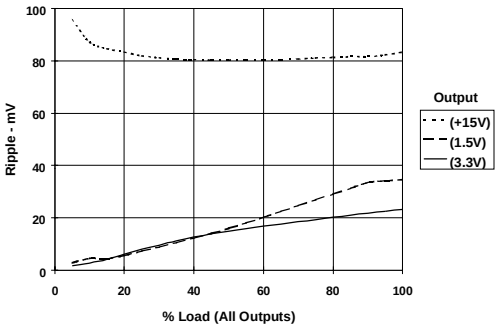

Load Regulation vs Output Current; V_o2 =+3.3V

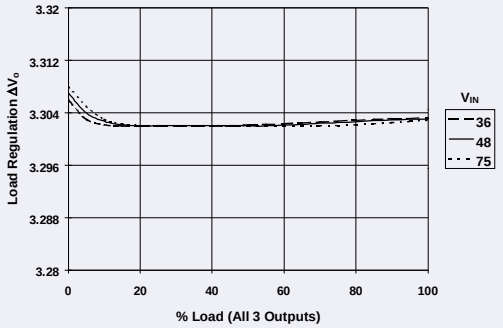

Power Dissipation vs Output Current

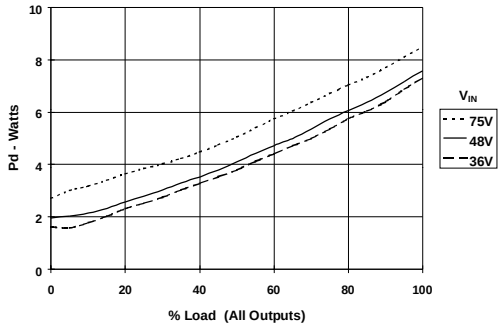

Load Regulation vs Output Current; V_o3 =+1.5V

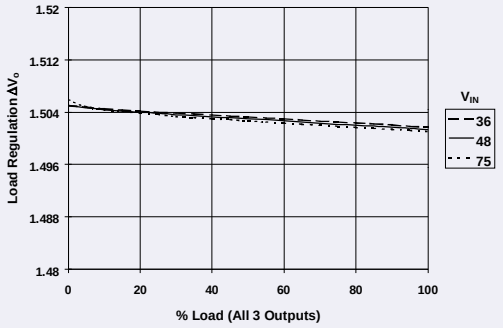

Safe Operating Area, V_{in} =48V (See Note B)

PT4801 SOA vs Output Power

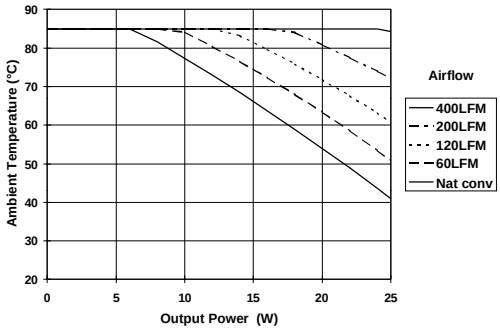

Note A: *All Characteristic data in the above graphs has been developed from actual products tested at 25°C. This data is considered typical data for the ISR.*
Note B: *SOA curves represent operating conditions at which internal components are at or below manufacturer's maximum rated operating temperatures.*

Using the Remote On/Off Control on the PT4801 Triple-Output Voltage DC/DC Converter

The three output voltages of the PT4801 triple-output DC/DC converter may be simultaneously disabled using the *Remote On/Off* control. This control is used in applications that require power-up/shutdown sequencing, or wherever there is a requirement to control the on/off status of the module with external circuitry.

On/off control of the PT4801 is provided by pin 1. If pin 1 is left open-circuit the regulator operates normally, and provides a regulated output at all three outputs, Vo_1 (pin 10), Vo_2 (pins 14, 15), and Vo_3 (pin 18), whenever a valid input voltage is applied to $\pm V_{in}$. If a low voltage is then applied to pin 1, the module's output will be disabled and the input current it draws will drop to a typical value of 8mA. The *Remote On/Off* input may also be used to hold the module's output in the 'off' state during the period that input power is applied. The input is ideally controlled using an open-collector (or open-drain) discrete transistor (See Figure 1) [3].

Table 1 Remote On/Off Control Parameters [1, 2]

Parameter	Min	Typ	Max
Enable (V_{IH})	2.5V	—	15V [3]
Disable (V_{IL})	–0.1V	—	0.8V

Notes:

1. The *Remote On/Off* input uses $-V_{in}$ (pins 3 & 4) as a ground reference, and cannot be directly controlled from circuitry referenced to the isolated output $\pm V_o$.
2. The internal circuitry comprises of a high impedance (3µA -10µA) current source. The open-circuit voltage is less than 10V.
3. A low-leakage MOSFET (<100nA) is recommended. A pull-up resistor is not required, but may be necessary to ensure that the *Remote On/Off* pin exceeds V_{IH}(min) (see Table 1). *Do not* use a pull-up resistor to the $+V_{in}$ input, or drive the pin above V_{IH}(max).
4. The PT4801 converter incorporates an "Under Voltage Lockout" (UVLO) function. This function will overide the *Remote On/Off* control until the input voltage applied to $\pm V_{in}$, is above the UVLO threshold. Consult the data sheet specifications for the on/off input voltage voltage thresholds.
5. Keep the on/off transition to less than 1ms. This prevents erratic operation of the converter, whereby the output voltage may drift un-regulated between 0V and the rated output voltage during power-up.
6. In Figure 1, Q_1 is a low-threshold MOSFET. The components R_g and C_{gs} are added to improve noise immunity.

Figure 1

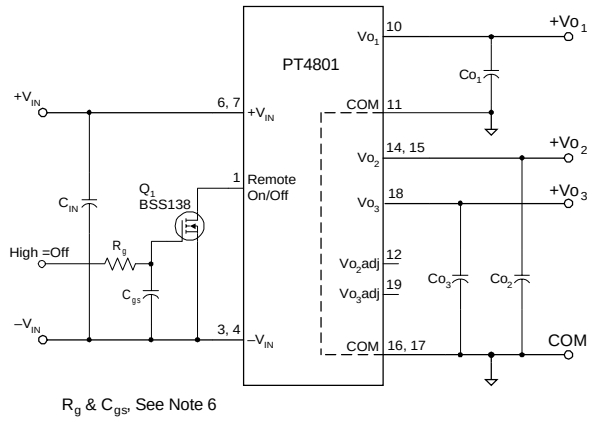

Power-Up Sequence: Turning Q_1 in Figure 1 off, removes the low-voltage signal at pin 1 and enables the outputs of the PT4801 converter. After a delay of about 5ms, the Vo_1 output will begin to rise first. This is closely followed by Vo_2, and Vo_3, which are internally sequenced to rise in unison. The total power-up time is less than 25ms and is relatively independent of load, and temperature. Figure 2 shows waveforms of all three output voltages, Vo_1, Vo_2, and Vo_3 following Q_1 turning off. The turn off of Q_1 corresponds to the fall in the applied V_{gs}. The waveforms were measured with a 48V input voltage.

Figure 2

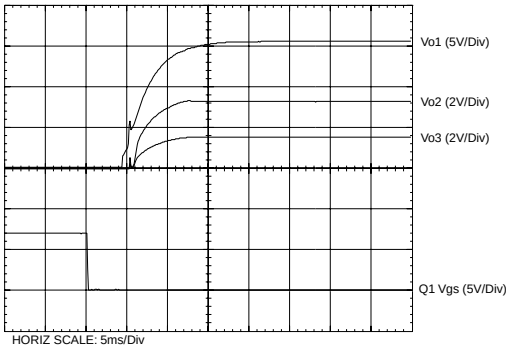

Adjusting the Output Voltage of the PT4801 Triple-Output DC/DC Converter

The low-voltage outputs from the PT4801 triple-output DC/DC converter, Vo_2 (3.3V) and Vo_3 (1.5V), can be independently adjusted from the factory trimmed preset value. Note that the primary use of this feature is for margin testing of the on-board supply voltages. A permanent increase in output voltage is not advised [1]. Also, due to design limitations, Vo_3 cannot be adjusted higher than its nominal value.

To adjust each output, a single external resistor is added to the circuit in either the "Adjust Up" or "Adjust Down" position (See Figure 1) [2]. Table 1 gives the allowable adjustment range for each output as V_a (min) and V_a (max).

Vo_2 Adjust Up: Add a resistor R_2 between pin 12 (Vo_2 Adj), and pin 11 (COM) [1].

Vo_2 Adjust Down: Add a resistor (R_1) between pin 12 (Vo_2 Adj), and pin 14 (Vo_2).

Vo_3 Adjust Up: Vo_3 cannot be adjusted higher.

Vo_3 Adjust Down: Add a resistor (R_3) between pin 19 (Vo_3 Adj), and pin 18 (Vo_3).

Refer to Figure 1 and Table 2 for both the placement and value of the adjust resistor.

Notes:

1. The high-side adjust range of the Vo_2 output may be limited by the input voltage and/or the load current status of all three outputs. This situation would most likely be encountered when Vo_1 is lightly loaded and either Vo_2 or Vo_3 is operating close to full load.
2. Use only a single 1% resistor in either the (R_1) or R_2 location to adjust Vo_2, and in the (R_3) location to adjust Vo_3. Place the resistor as close to the ISR as possible.
3. Never connect capacitors to either of the output adjust control pins. Any capacitance added to these control pins will affect the stability of the respective regulated output.

The adjust up and adjust down resistor values can be calculated using the following formulas. Be sure to select the correct formula parameter from Table 1 for the output being adjusted.

$$(R_1) \text{ or } (R_3) = \frac{R_o (V_a - V_r)}{(V_o - V_a)} - R_s \quad k\Omega$$

$$R_2 = \frac{R_o \cdot V_r}{(V_a - V_o)} - R_s \quad k\Omega$$

Where
V_o = Original output voltage
V_a = Adjusted output voltage
V_r = Reference voltage (Table 1)
R_o = Multiplier resistor (Table 1)
R_s = Series resistance (Table 1)

Figure 1

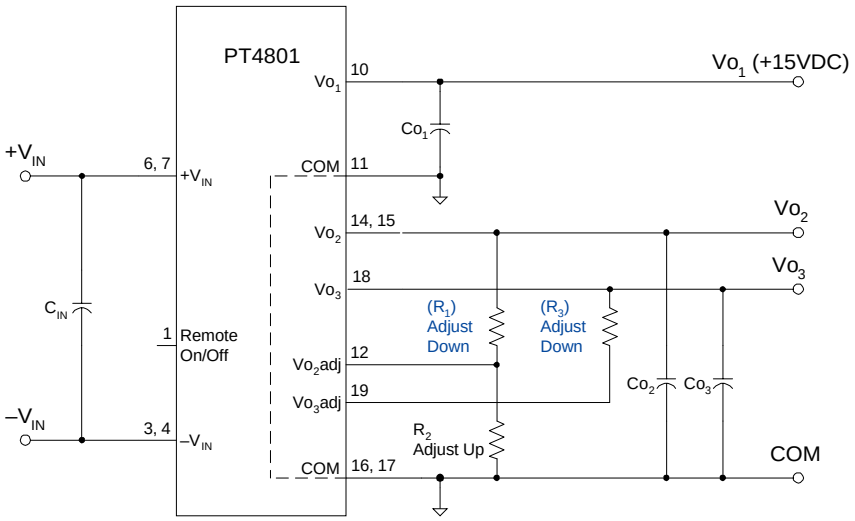

Table 1

ADJUSTMENT RANGE AND FORMULA PARAMETERS

V_{o2} Bus		V_{o3} Bus
Adj. Resistor	**(R1)/R2**	**(R3)**
V_o(nom)	3.3V	1.5V
V_a(min)	3.135V	1.425V
V_a(max)	3.465V *	—
Vr	1.225V	1.225V
R_o (V·kΩ)	11.0	7.5
R_s (kΩ)	40.2	5.36

* See Note 1

Table 2

ADJUSTMENT RESISTOR VALUES

V_{o1} Bus		V_{o2} Bus	
Adj. Resistor	**(R1)/R2**	**Adj. Resistor**	**(R3)**
V_o(nom)	3.3V	**V_o(nom)**	1.5V
V_a(req'd)		**V_a(req'd)**	
3.135	(87.1)kΩ	1.425	(14.6)kΩ
3.15	(101.0)kΩ	1.44	(21.5)kΩ
3.165	(118.0)kΩ	1.455	(33.0)kΩ
3.18	(139.0)kΩ	1.47	(55.9)kΩ
3.195	(166.0)kΩ	1.485	(125.0)kΩ
3.21	(202.0)kΩ	1.5	
3.225	(253.0)kΩ		
3.24	(329.0)kΩ		
3.255	(456.0)kΩ		
3.27	(710.0)kΩ		
3.285			
3.3			
3.315			
3.33	409.0kΩ		
3.345	259.0kΩ		
3.36	184.0kΩ		
3.375	139.0kΩ		
3.39	110.0kΩ		
3.405	88.1kΩ		
3.42	72.1kΩ		
3.435	59.6kΩ		
3.45	49.6kΩ		
3.465	41.5kΩ		

R_1/R_3 = (Blue), R_2/R_4 = Black

VDE Approved Installation Instructions (Installationsanleitung)

Nennspannnug (Rated Voltage):	PT4801 36 to 72 Vdc, Transient to 80Vdc
Nennaufnahme (Rated Input):	PT4801 1.5 Adc
Nennleistung (Rated Power):	25 Watts Maximum
Ausgangsspannung (Sec. Voltage):	PT4801 Series PT4801, +15/ +3.3/ +1.5 Vdc, 1.25 Adc/ 3.0 Adc/ 2.0 Adc
Ausgangsstrom (Sec. Current): oder (or) Ausgangsleistung (Sec. Power):	Maximum total current is 6.0 Adc or 25 Watts

Angabe der Umgebungstemperatur

(Information on ambient temperature): +85 °C maximum

Besondere Hinweise (Special Instructions):

Es ist vorzusehen, daß die Spannungsversorgung in einer Endanwendung über eine isolierte Sekundaerschaltung bereit gestellt wird. Die Eingangspannung der Spannungsversorgungsmodule muss eine verstaerkte Isolierung von der Wechselstromquelle aufweisen.

Die Spannungsversorgung muss gemaess den Gehaeuse-, Montage-, Kriech- und Luftstrecken-, Markierungs- und Trennanforderungen der Endanwendung installiert werden. Bei Einsatz eines TNV-3-Einganges muss die SELV-Schaltung ordnungsgemaess geerdet werden.

(The power supply is intended to be supplied by isolated secondary circuitry in an end use application. The input power to these power supplies shall have reinforced insulation from the AC mains.

The power supply shall be installed in compliance with the enclosure, mounting, creepage, clearance, casualty, markings, and segregation requirements of the end-use application. When the input is TNV-3, the SELV circuitry must be reliably grounded.)

Offenbach,

VDE Prüf- und Zertifizierungsinstitut
Abteilung / *Department TD*

(Jürgen Bärwinkel)

Ort / *Place*: Datum / *Date*:

12/12/01

(Stempel und Unterschrift des Herstellers / Stamp and signature of the manufacturer)

IMPORTANT NOTICE

Texas Instruments Incorporated and its subsidiaries (TI) reserve the right to make corrections, modifications, enhancements, improvements, and other changes to its products and services at any time and to discontinue any product or service without notice. Customers should obtain the latest relevant information before placing orders and should verify that such information is current and complete. All products are sold subject to TI's terms and conditions of sale supplied at the time of order acknowledgment.

TI warrants performance of its hardware products to the specifications applicable at the time of sale in accordance with TI's standard warranty. Testing and other quality control techniques are used to the extent TI deems necessary to support this warranty. Except where mandated by government requirements, testing of all parameters of each product is not necessarily performed.

TI assumes no liability for applications assistance or customer product design. Customers are responsible for their products and applications using TI components. To minimize the risks associated with customer products and applications, customers should provide adequate design and operating safeguards.

TI does not warrant or represent that any license, either express or implied, is granted under any TI patent right, copyright, mask work right, or other TI intellectual property right relating to any combination, machine, or process in which TI products or services are used. Information published by TI regarding third–party products or services does not constitute a license from TI to use such products or services or a warranty or endorsement thereof. Use of such information may require a license from a third party under the patents or other intellectual property of the third party, or a license from TI under the patents or other intellectual property of TI.

Reproduction of information in TI data books or data sheets is permissible only if reproduction is without alteration and is accompanied by all associated warranties, conditions, limitations, and notices. Reproduction of this information with alteration is an unfair and deceptive business practice. TI is not responsible or liable for such altered documentation.

Resale of TI products or services with statements different from or beyond the parameters stated by TI for that product or service voids all express and any implied warranties for the associated TI product or service and is an unfair and deceptive business practice. TI is not responsible or liable for any such statements.

Mailing Address:

Texas Instruments
Post Office Box 655303
Dallas, Texas 75265

Copyright © 2002, Texas Instruments Incorporated

Looking for pricing, stock, or lifecycle information?

Click below to explore more details on WIN SOURCE:

- View PT4801C on WIN SOURCE
- Texas Instruments Information

Optimize Your Supply Chain with WIN SOURCE Solutions

- Global Sourcing Solution
- Obsolete Management
- Cost Control Management
- Shortage Management
- Alternative Solution
- Excess Inventory Management