THE DATASHEET OF

TLA-3T105LF

www.win-source.net 0086-755-83957316

Pulse transformers

TLA /ALT series

Issue date: April 2012

- All specifications are subject to change without notice.
- Conformity to RoHS Directive: This means that, in conformity with EU Directive 2002/95/EC, lead, cadmium, mercury, hexavalent chromium, and specific bromine-based flame retardants, PBB and PBDE, have not been used, except for exempted applications.

PULSE TRANSFORMERS

TLA/ALT SERIES

Contents Page

Pulse Transformers/Pin Terminal Type

TLA-3T101LF(-T) 10BASE-2/5/T 2
TLA-3T106LF(-T) 10BASE-T.....4
TLA-3T107LF(-T) 10BASE-T.....4
TLA-3T105LF(-T) 10BASE-T.....6
TLA-3T109LF(-T) 10BASE-T.....6
TLA-3T110LF(-T) 10BASE-T.....6
TLA-3T112LF(-T) 10BASE-T.....6
TLA-6T103LF(-T) 10/100BASE-TX 8
TLA-6T118LF(-T) 10/100BASE-TX 10
TLA-6T119LF(-T) 10/100BASE-TX 10
TLA-6T120LF(-T) 10/100BASE-TX 10
TLA-6T121LF(-T) 10/100BASE-TX 10
TLA-6T122LF(-T) 10/100BASE-TX 10
TLA-6T127LF(-T) 10/100BASE-TX, PoE.....12
TLA-6T133WLF(-T) 10/100BASE-TX.....14
TLA-6T214ALF(-T) 10/100/1000BASE-T 16
TLA-6T213LF(-T) 10/100/1000BASE-TX.....18
TLA-7T201LF(-T) 10/100/1000BASE-TX.....20
TLA-6T406(-T) 10/100BASE-TX.....22
TLA-7T101LF(-T) 10/100/1000BASE-T 24

Pulse Transformers/Connector Type

TLA-6T776F 10/100BASE-TX.....26
TLA-6T785 10/100BASE-TX.....28

LC Modules

TLA-3M103LF(-T) 10BASE-T 30

Pulse Transformers/SMD Type

ALT4532 32

Precautions

The TDK products in this data are intended for usage in general electronics applications (computer, personal equipment, office equipment, measuring equipment, industrial robotics, domestic appliances, etc.).
They are neither intend nor warranted for usage in equipment that requires extraordinarily high quality and/or reliability or a malfunction or failure of which may cause loss of human life or bodily injury (atomic energy control instruments, airplane or spaceship instruments, transportation instrument, traffic signal instruments, combustion control instrument, medical instruments, all types of safety devices, etc.).

- Conformity to RoHS Directive: This means that, in conformity with EU Directive 2002/95/EC, lead, cadmium, mercury, hexavalent chromium, and specific bromine-based flame retardants, PBB and PBDE, have not been used, except for exempted applications.

PULSE TRANSFORMERS TLA/ALT Series

Pulse Transformers/Pin Terminal Type

TLA-3T101LF(-T) ISO8802.3(IEEE802.3) 10BASE2/5/-T

FEATURES

- Product conforming to RoHS directive.
- Can be mounted with lead-free solder (260°C max.).
- 16-pin SMD package(1.27mm=50mil pin pitch).
- Using the high-quality and wide-band ferrite cores for LAN.
- Packaging specification is taping and bulk(TLA-3T101LF-T: Tape and reel, TLA-3T101LF: Bulk).

GENERAL SPECIFICATIONS

Pulse transformer		3
Port		1
Temperature ranges	Operating	0 to +70°C
	Storage	–40 to +85°C
Withstanding voltage		Erms:2000V[60s]

SHAPES AND DIMENSIONS

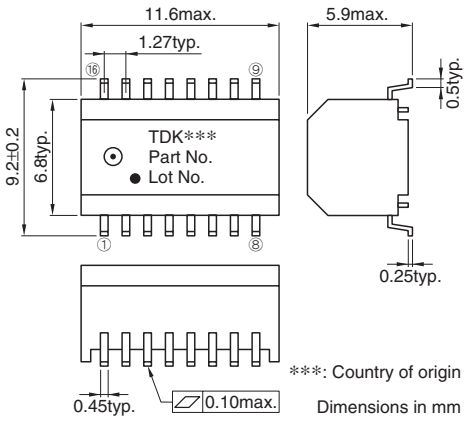

CIRCUIT DIAGRAM

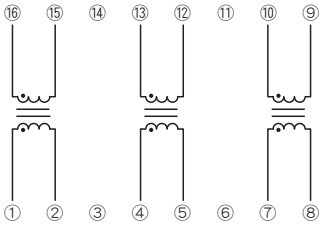

N.C. pins: ③⑥⑪⑭

RECOMMENDED PC BOARD PATTERN

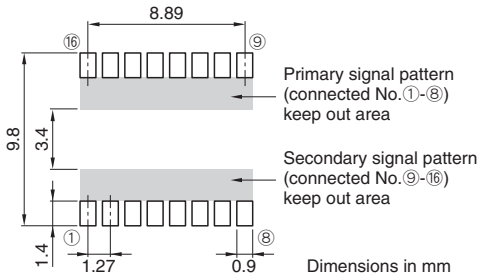

ELECTRICAL CHARACTERISTICS

Part No.	Turns ratio ①②:⑯⑮ ④⑤:⑬⑫ ⑦⑧:⑩⑨	Inductance (μH)typ.[100kHz] ①-② ④-⑤ ⑦-⑧	Leakage inductance (μH)max.[100kHz] ①-②[⑯-⑮ shorted] ④-⑤[⑬-⑫ shorted] ⑦-⑧[⑩-⑨ shorted]	Inter-winding stray capacitance (pF)max.[100kHz] ①②-⑯⑮ ④⑤-⑬⑫ ⑦⑧-⑩⑨	DC resistance (Ω)max. ①-②,⑯-⑮ ④-⑤,⑬-⑫ ⑦-⑧,⑩-⑨
TLA-3T101LF(-T)	1:1	100	0.25	10	0.35, 0.35

- Ta=25°C

- Conformity to RoHS Directive: This means that, in conformity with EU Directive 2002/95/EC, lead, cadmium, mercury, hexavalent chromium, and specific bromine-based flame retardants, PBB and PBDE, have not been used, except for exempted applications.

- All specifications are subject to change without notice.

PACKAGING STYLES

Quantity : 1000pieces/reel

TAPE DIMENSIONS

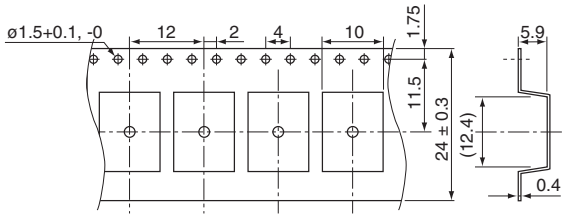

Dimensions in mm

REEL DIMENSIONS

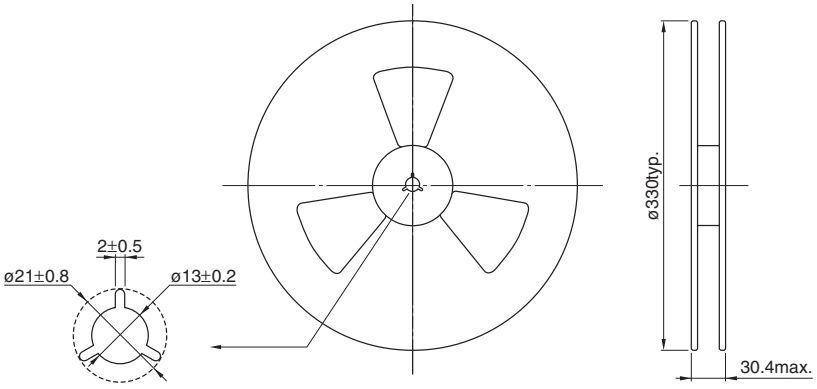

Dimensions in mm

RECOMMENDED SOLDERING CONDITION

REFLOW SOLDERING

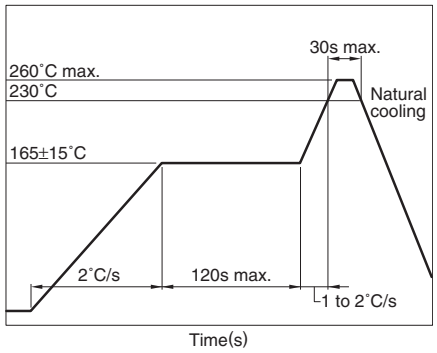

- Temperature is measured at the terminal portion of product (Using thermocoupler for measurement).
- This profile is reference data we recommend. Please check in your actual process.
- For reliable soldering, the thickness of solder paste screen should be over the terminal co-planality.
- The cutted end of terminal has no plating(out of subject of solder ability).

RECOMMENDED CONDITION FOR LONG TERM STORE

When it stores for a long term, please avoid place of high temperature and high humidity. Recommend that it uses after the delivery within 1year.

Temperature range: +5 to +30°C

Humidity: 60(%)RH max.

TDK

TLA-3T106LF(-T)/107LF(-T) ISO8802.3(IEEE802.3) 10BASE-T

FEATURES

- Product conforming to RoHS directive.
- Can be mounted with lead-free solder (260°C max.).
- 16-pin SMD package(1.27mm=50mil pin pitch).
- Using the high-quality and wide-band ferrite cores for LAN.
- Packaging specification is taping and bulk(TLA-3T10□LF-T: Tape and reel, TLA-3T10 □LF: Bulk).

GENERAL SPECIFICATIONS

Pulse transformer		4
Port		4
Temperature ranges	Operating	0 to +70°C
	Storage	–40 to +85°C
Withstanding voltage		Erms: 2000V[60s]

SHAPES AND DIMENSIONS

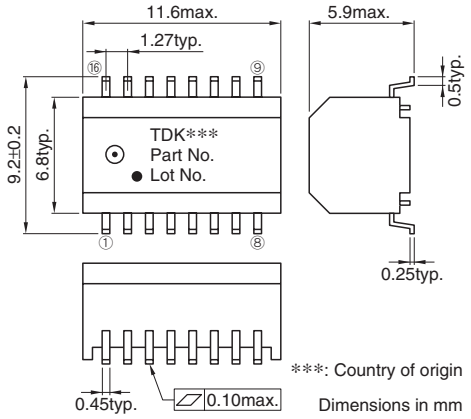

CIRCUIT DIAGRAM

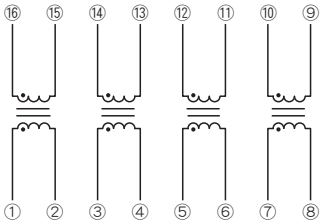

RECOMMENDED PC BOARD PATTERN

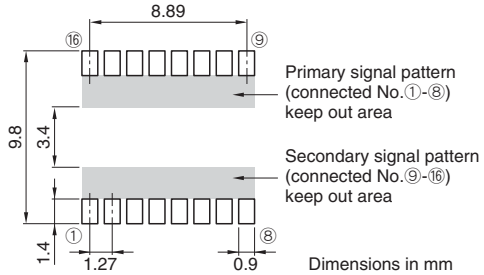

ELECTRICAL CHARACTERISTICS

Part No.	Turns ratio ①②:⑯⑮ ③④:⑭⑬ ⑤⑥:⑫⑪ ⑦⑧:⑩⑨	Inductance (μH)min.[100kHz] ①-② ③-④ ⑤-⑥ ⑦-⑧	Leakage inductance (μH)max.[100kHz] ①-②[⑯-⑮ shorted] ③-④[⑭-⑬ shorted] ⑤-⑥[⑫-⑪ shorted] ⑦-⑧[⑩-⑨ shorted]	Inter-winding stray capacitance (pF)max.[100kHz] ①②-⑯⑮ ③④-⑭⑬ ⑤⑥-⑫⑪ ⑦⑧-⑩⑨	DC resistance (Ω)max. ①-②, ⑯-⑮ ③-④, ⑭-⑬ ⑤-⑥, ⑫-⑪ ⑦-⑧, ⑩-⑨
TLA-3T106LF(-T)	1:1	130	0.3	12	0.4, 0.4
TLA-3T107LF(-T)	1:1.41	130	0.3	12	0.4, 0.5

- Ta=25°C

- Conformity to RoHS Directive: This means that, in conformity with EU Directive 2002/95/EC, lead, cadmium, mercury, hexavalent chromium, and specific bromine-based flame retardants, PBB and PBDE, have not been used, except for exempted applications.

- All specifications are subject to change without notice.

PACKAGING STYLES

Quantity : 1000pieces/reel

TAPE DIMENSIONS

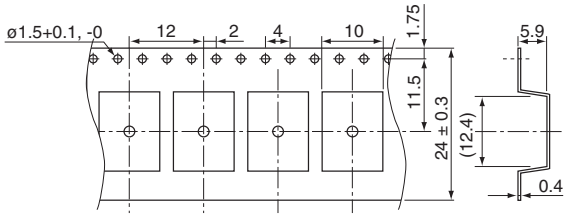

Dimensions in mm

REEL DIMENSIONS

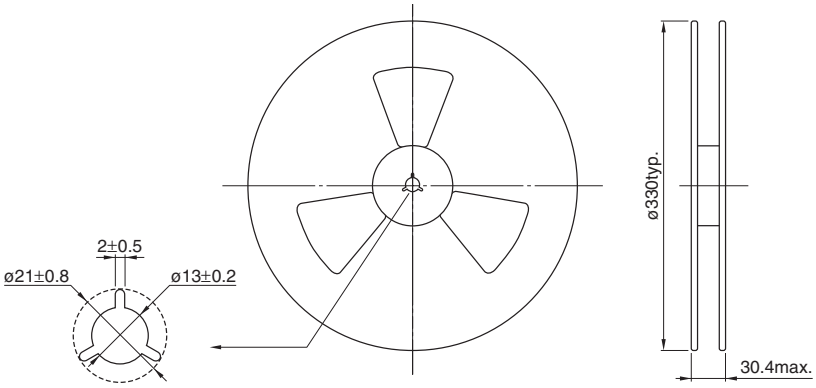

Dimensions in mm

RECOMMENDED SOLDERING CONDITION

REFLOW SOLDERING

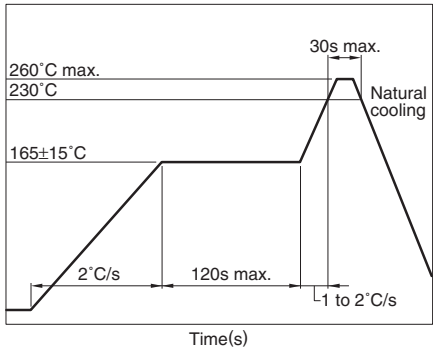

- Temperature is measured at the terminal portion of product (Using thermocoupler for measurement).
- This profile is reference data we recommend. Please check in your actual process.
- For reliable soldering, the thickness of solder paste screen should be over the terminal co-planality.
- The cutted end of terminal has no plating(out of subject of solder ability).

RECOMMENDED CONDITION FOR LONG TERM STORE

When it stores for a long term, please avoid place of high temperature and high humidity. Recommend that it uses after the delivery within 1year.

Temperature range: +5 to +30°C

Humidity: 60(%)RH max.

TDK

TLA-3T105LF(-T)/109LF(-T)/110LF(-T)/112LF(-T) ISO8802.3(IEEE802.3) 10BASE-T

FEATURES

- Product conforming to RoHS directive.
- Can be mounted with lead-free solder (260°C max.).
- 16-pin SMD package(1.27mm=50mil pin pitch).
- Using the high-quality and wide-band ferrite cores for LAN.
- Packaging specification is taping and bulk(TLA-3T1□□LF-T: Tape and reel, TLA-3T1 □□LF: Bulk).

GENERAL SPECIFICATIONS

Pulse transformer		2
Common-mode choke		2
Port		1
Temperature ranges	Operating	0 to +70°C
	Storage	–40 to +85°C
Withstanding voltage		Erms: 2000V[60s]

SHAPES AND DIMENSIONS

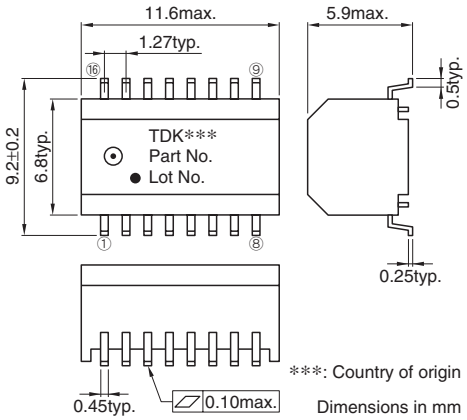

CIRCUIT DIAGRAM

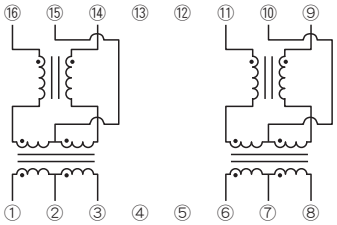

N.C. pins: ④⑤⑫⑬

RECOMMENDED PC BOARD PATTERN

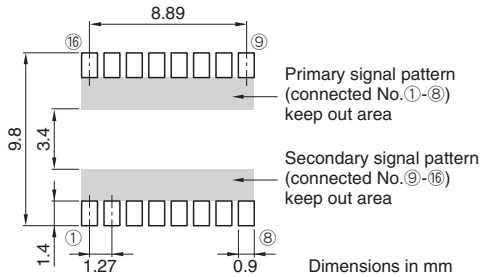

ELECTRICAL CHARACTERISTICS

Part No.	Turns ratio ①②③:⑯⑮⑭ ⑥⑦⑧:⑪⑩⑨	Inductance (μH)min.[100kHz] ①-③ ⑥-⑧	Leakage inductance (μH)max.[100kHz] ①-③[⑯-⑭ shorted] ⑥-⑧[⑪-⑨ shorted]	Inter-winding stray capacitance (pF)max.[100kHz] ①③-⑯⑭ ⑥⑧-⑪⑨	DC resistance (Ω)max. ①-③ ⑥-⑧
TLA-3T105LF(-T)	1CT:1CT	130	0.3	12	0.5
	1CT:1CT	130	0.3	12	0.5
TLA-3T109LF(-T)	2CT:1CT	130	0.95	12	0.5
	1CT:1CT	130	0.35	12	0.5
TLA-3T110LF(-T)	1CT:1CT	130	0.35	12	0.5
	1CT:1.41CT	130	0.35	12	0.5
TLA-3T112LF(-T)	1CT:1CT	130	0.35	12	0.85
	1CT:2.5CT	130	0.35	12	0.85

- Ta=25°C

- Conformity to RoHS Directive: This means that, in conformity with EU Directive 2002/95/EC, lead, cadmium, mercury, hexavalent chromium, and specific bromine-based flame retardants, PBB and PBDE, have not been used, except for exempted applications.

- All specifications are subject to change without notice.

PACKAGING STYLES

Quantity : 1000pieces/reel

TAPE DIMENSIONS

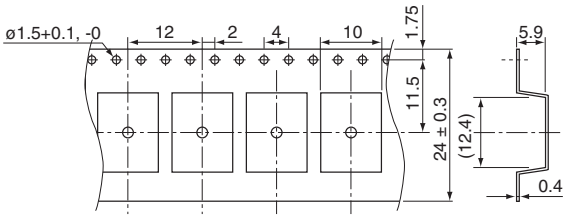

Dimensions in mm

REEL DIMENSIONS

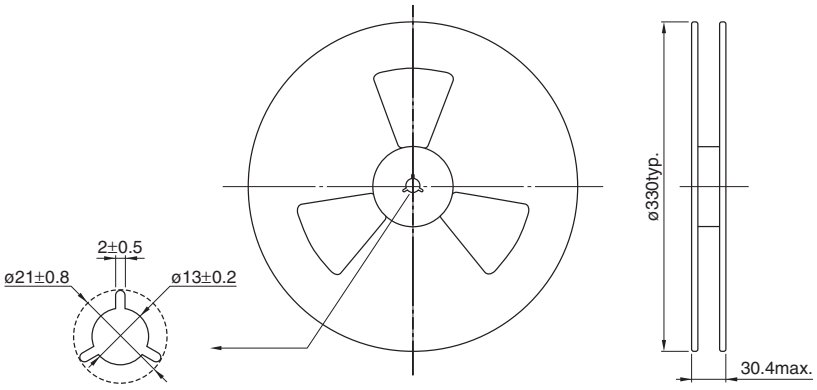

Dimensions in mm

RECOMMENDED SOLDERING CONDITION

REFLOW SOLDERING

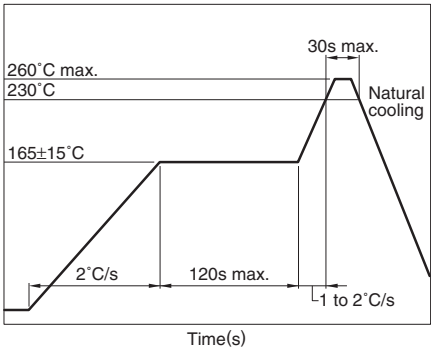

- Temperature is measured at the terminal portion of product (Using thermocoupler for measurement).
- This profile is reference data we recommend. Please check in your actual process.
- For reliable soldering, the thickness of solder paste screen should be over the terminal co-planality.
- The cutted end of terminal has no plating(out of subject of solder ability).

RECOMMENDED CONDITION FOR LONG TERM STORE

When it stores for a long term, please avoid place of high temperature and high humidity. Recommend that it uses after the delivery within 1year.

Temperature range: +5 to +30°C

Humidity: 60(%)RH max.

TLA-6T103LF(-T) ISO8802.3(IEEE802.3) 10/100BASE-TX & ATM

FEATURES

- Product conforming to RoHS directive.
- Can be mounted with lead-free solder (260°C max.).
- 16-pin SMD package(2.54mm=100mil pin pitch).
- Excellent common-mode noise suppression.
- Inductance is 350μH or greater (f=100kHz, DC bias=8mA).
- Using the high-quality and wide-band ferrite cores for LAN.
- Packaging specification is taping and bulk(TLA-6T103LF-T: Tape and reel, TLA-6T103LF: Bulk).

GENERAL SPECIFICATIONS

Pulse transformer		2
Common-mode choke		2
Inductor		1
Port		1
Temperature ranges	Operating	0 to +70°C
	Storage	–40 to +85°C
Withstanding voltage		Erms:1500V[60s]

SHAPES AND DIMENSIONS

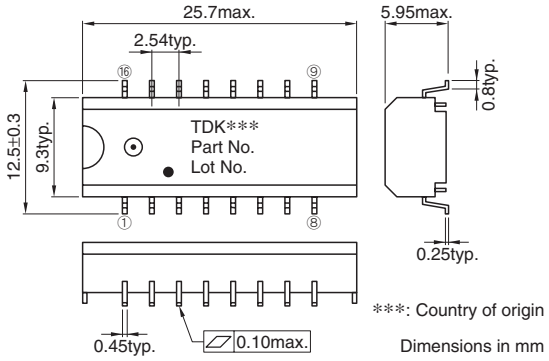

CIRCUIT DIAGRAM

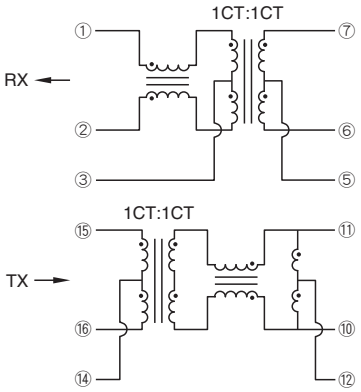

N.C. pins: ④⑧⑨⑬

RECOMMENDED PC BOARD PATTERN

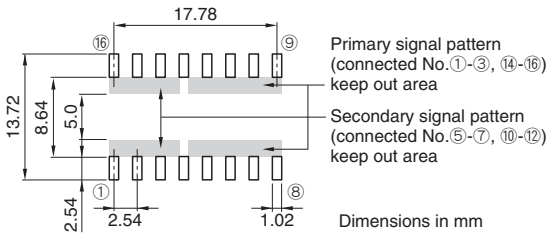

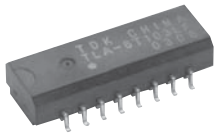

ELECTRICAL CHARACTERISTICS

Part No.	Turns ratio ⑮⑭⑯ : ⑪⑫⑩ ①③② : ⑦⑤⑥	Inductance (μH)min. [DC bias 8mA, 100kHz] ⑪-⑩ ⑦-⑥	Insertion loss (dB)max. [0.1 to 100MHz] ⑮⑯-⑪⑩ ⑦⑥-①②	Inter-winding stray capacitance (pF)max.[100kHz] ⑮⑯-⑪⑩ ①②-⑦⑥
TLA-6T103LF(-T)	1CT:1CT	350	1	25
	1CT:1CT	350	1	25

- Ta=25°C

- Conformity to RoHS Directive: This means that, in conformity with EU Directive 2002/95/EC, lead, cadmium, mercury, hexavalent chromium, and specific bromine-based flame retardants, PBB and PBDE, have not been used, except for exempted applications.

- All specifications are subject to change without notice.

PACKAGING STYLES

Quantity : 600pieces/reel

TAPE DIMENSIONS

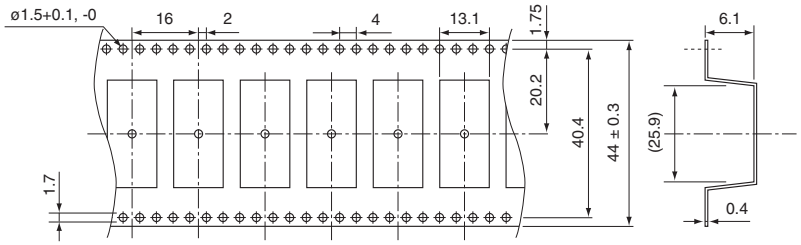

Dimensions in mm

REEL DIMENSIONS

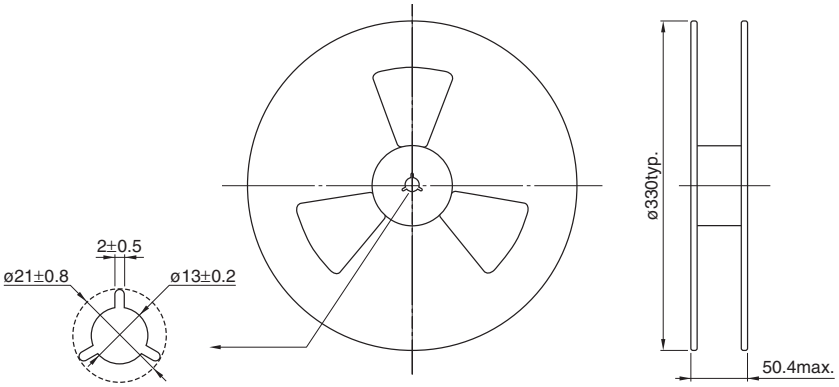

Dimensions in mm

RECOMMENDED SOLDERING CONDITION
REFLOW SOLDERING

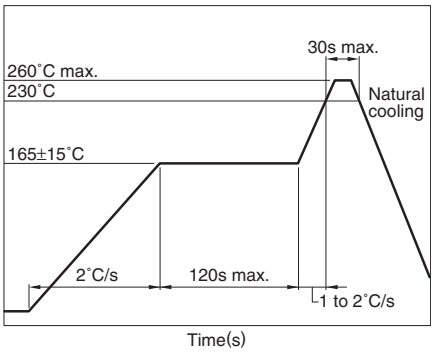

- Temperature is measured at the terminal portion of product (Using thermocoupler for measurement).
- This profile is reference data we recommend. Please check in your actual process.
- For reliable soldering, the thickness of solder paste screen should be over the terminal co-planality.
- The cutted end of terminal has no plating(out of subject of solder ability).

RECOMMENDED CONDITION FOR LONG TERM STORE

When it stores for a long term, please avoid place of high temperature and high humidity. Recommend that it uses after the delivery within 1year.

Temperature range: +5 to +30°C

Humidity: 60(%)RH max.

TDK

TLA-6T118LF/119LF/120LF/121LF/122LF(-T) ISO8802.3(IEEE802.3) 10/100BASE-TX

FEATURES

- Product conforming to RoHS directive.
- Can be mounted with lead-free solder (260°C max.).
- 16-pin SMD package(1.27mm=50mil pin pitch).
- Excellent common mode noise suppression.
- Inductance is 350μH or greater (f=100kHz, DC bias=8mA).
- Using the high-quality and wide-band ferrite cores for LAN.
- Packaging specification is taping and bulk(TLA-6T1□□LF-T: Tape and reel, TLA-6T1 □□LF: Bulk).

GENERAL SPECIFICATIONS

Pulse transformer		2
Common-mode choke		2
Port		1
Temperature ranges	Operating	0 to +70°C
	Storage	–40 to +85°C
Withstanding voltage		Erms:1500V[60s]

SHAPES AND DIMENSIONS

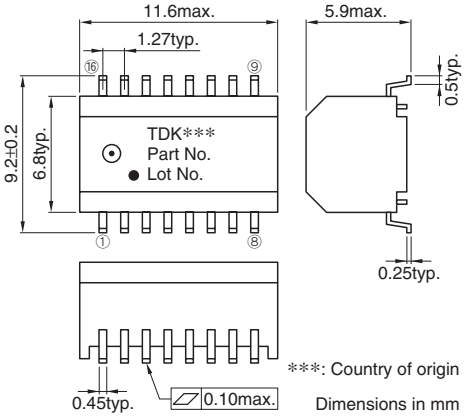

CIRCUIT DIAGRAM

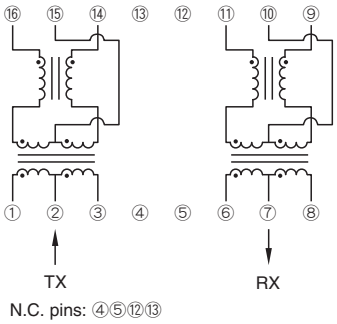

RECOMMENDED PC BOARD PATTERN

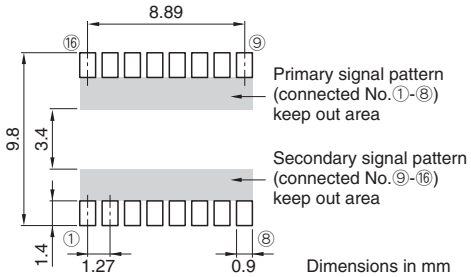

ELECTRICAL CHARACTERISTICS

Part No.	Turns ratio ①②③ : ⑯⑮⑭ ⑥⑦⑧ : ⑪⑩⑨	Inductance (μH)min. [DC bias 8mA, 100kHz] ⑯-⑭ ⑪-⑨	Insertion loss (dB)max. [0.1 to 100MHz] ①③-⑯⑭ ⑪⑨-⑥⑧	Inter-winding stray capacitance (pF)max.[100kHz] ①③-⑯⑭ ⑥⑧-⑪⑨
TLA-6T118LF(-T)	1CT:1CT	350	1	25
	1CT:1CT	350	1	25
TLA-6T119LF(-T)	1.41CT:1CT	350	2	25
	1CT:1CT	350	1	25
TLA-6T120LF(-T)	2CT:1CT	350	3.5	25
	1CT:1CT	350	1	25
TLA-6T121LF(-T)	1CT:1.41CT	350	2.5	25
	1CT:1CT	350	1	25
TLA-6T122LF(-T)	1.25CT:1CT	350	2	25
	1CT:1CT	350	1	25

- Ta=25°C

- Conformity to RoHS Directive: This means that, in conformity with EU Directive 2002/95/EC, lead, cadmium, mercury, hexavalent chromium, and specific bromine-based flame retardants, PBB and PBDE, have not been used, except for exempted applications.

- All specifications are subject to change without notice.

PACKAGING STYLES

Quantity : 1000pieces/reel

TAPE DIMENSIONS

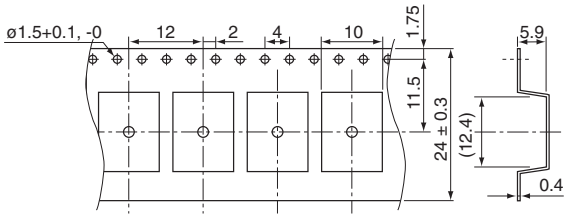

Dimensions in mm

REEL DIMENSIONS

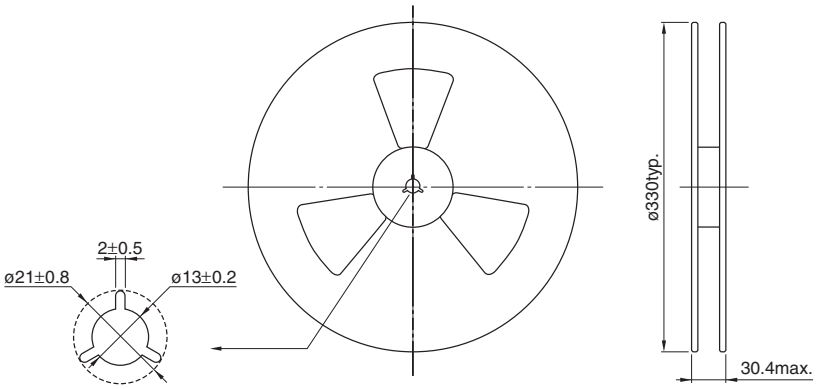

Dimensions in mm

RECOMMENDED SOLDERING CONDITION

REFLOW SOLDERING

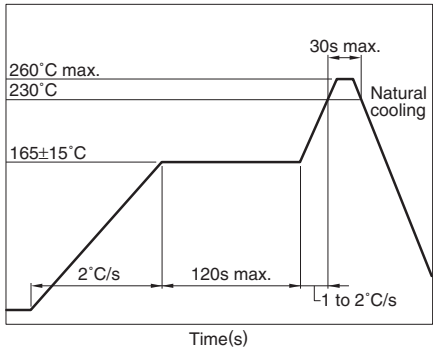

- Temperature is measured at the terminal portion of product (Using thermocoupler for measurement).
- This profile is reference data we recommend. Please check in your actual process.
- For reliable soldering, the thickness of solder paste screen should be over the terminal co-planality.
- The cutted end of terminal has no plating(out of subject of solder ability).

RECOMMENDED CONDITION FOR LONG TERM STORE

When it stores for a long term, please avoid place of high temperature and high humidity. Recommend that it uses after the delivery within 1year.

Temperature range: +5 to +30°C

Humidity: 60(%)RH max.

TLA-6T127LF(-T) ISO8802.3(IEEE802.3) 10/100BASE-TX, POWER OVER ETHERNET

FEATURES

- Product conforming to RoHS directive.
- Can be mounted with lead-free solder (260°C max.).
- 16-pin SMD package(1.27mm=50mil pin pitch).
- Inductance is 350μH or greater (f=100kHz, DC bias=8mA).
- Allowable current is 350mA max.
- Excellent common mode noise suppression under the power transmission.
- Packaging specification is taping and bulk(TLA-6T127LF-T: Tape and reel, TLA-6T127LF: Bulk).

GENERAL SPECIFICATIONS

Pulse transformer		2
Common-mode choke		2
Port		1
Temperature ranges	Operating	0 to +70°C
	Storage	–40 to +85°C
Withstanding voltage		Erms:1500V[60s]

SHAPES AND DIMENSIONS

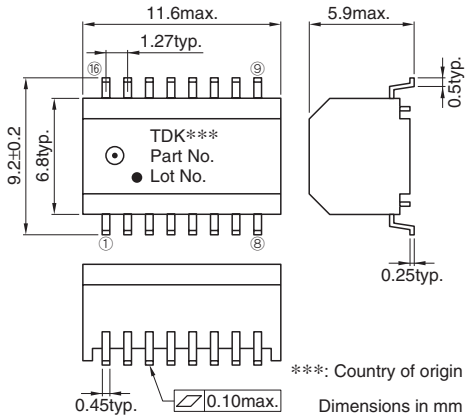

CIRCUIT DIAGRAM

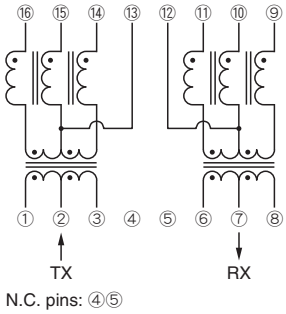

RECOMMENDED PC BOARD PATTERN

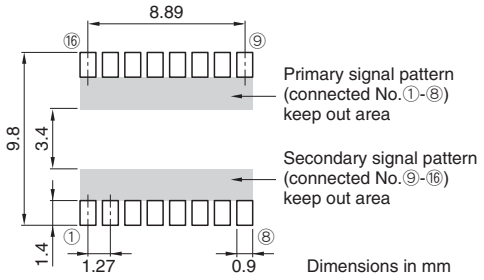

ELECTRICAL CHARACTERISTICS

Part No.	Turns ratio ①②③ : ⑯⑮⑭ ⑥⑦⑧ : ⑪⑩⑨	Inductance (μH)min. [DC bias 8mA, 100kHz] ⑯-⑭ ⑪-⑨	Insertion loss (dB)max. [0.1 to 100MHz] ①③-⑯⑭ ⑪⑨-⑥⑧	Inter-winding stray capacitance (pF)max.[100kHz] ①③-⑯⑭ ⑥⑧-⑪⑨
TLA-6T127LF(-T)	1CT:1CT	350	1	25
	1CT:1CT	350	1	25

- Ta=25°C

- Conformity to RoHS Directive: This means that, in conformity with EU Directive 2002/95/EC, lead, cadmium, mercury, hexavalent chromium, and specific bromine-based flame retardants, PBB and PBDE, have not been used, except for exempted applications.

- All specifications are subject to change without notice.

PACKAGING STYLES

Quantity : 1000pieces/reel

TAPE DIMENSIONS

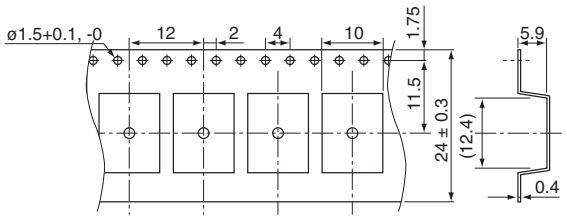

Dimensions in mm

REEL DIMENSIONS

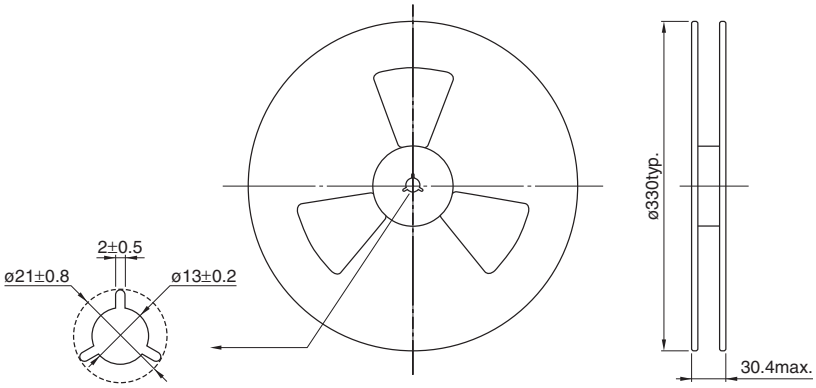

Dimensions in mm

RECOMMENDED SOLDERING CONDITION

REFLOW SOLDERING

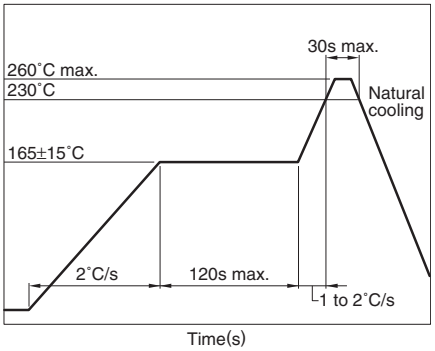

- Temperature is measured at the terminal portion of product (Using thermocoupler for measurement).
- This profile is reference data we recommend. Please check in your actual process.
- For reliable soldering, the thickness of solder paste screen should be over the terminal co-planality.
- The cutted end of terminal has no plating(out of subject of solder ability).

RECOMMENDED CONDITION FOR LONG TERM STORE

When it stores for a long term, please avoid place of high temperature and high humidity. Recommend that it uses after the delivery within 1year.

Temperature range: +5 to +30°C

Humidity: 60(%)RH max.

TDK

TLA-6T133WLF(-T) ISO8802.3(IEEE802.3) 10/100BASE-TX

FEATURES

- Can be used in the wide range of temperature(–40 to +85°C).
- Product conforming to RoHS directive.
- Can be mounted with lead-free solder (260°C max.).
- 16-pin SMD package(1.27mm=50mil pin pitch).
- Excellent common mode noise suppression.
- Inductance is 350μH or greater (f=100kHz, DC bias=8mA).
- Using the high-quality and wide-band ferrite cores for LAN.
- Packaging specification is taping and bulk(TLA-6T133WLF-T: Tape and reel, TLA-6T133WLF: Bulk).

GENERAL SPECIFICATIONS

Pulse transformer		2
Common-mode choke		2
Port		1
Temperature ranges	Operating	–40 to +85°C
	Storage	–40 to +85°C
Withstanding voltage		Erms:1500V[60s]

SHAPES AND DIMENSIONS

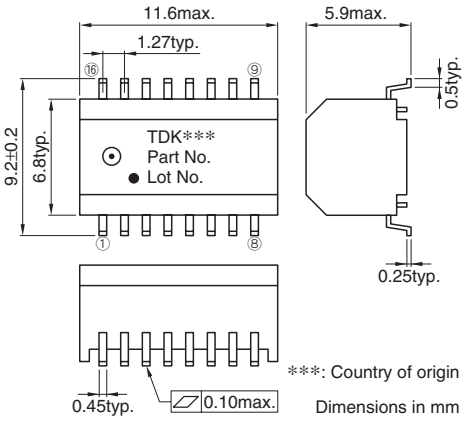

CIRCUIT DIAGRAM

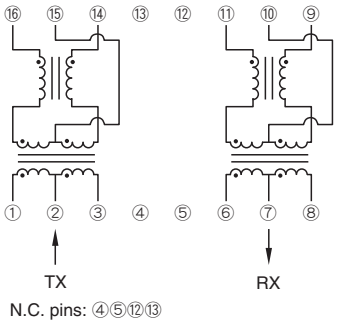

RECOMMENDED PC BOARD PATTERN

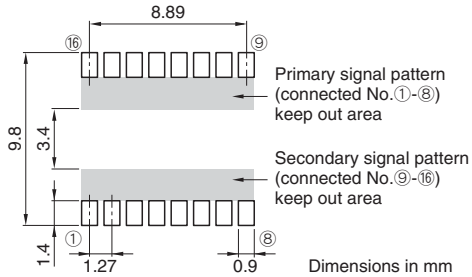

ELECTRICAL CHARACTERISTICS

Part No.	Turns ratio ①②③ : ⑯⑮⑭ ⑥⑦⑧ : ⑪⑩⑨	Inductance (μH)min. [DC bias 8mA, 100kHz] ⑯-⑭ ⑪-⑨	Insertion loss (dB)max. [0.1 to 100MHz] ①③-⑯⑭ ⑪⑨-⑥⑧	Inter-winding stray capacitance (pF)max.[100kHz] ①③-⑯⑭ ⑥⑧-⑪⑨
TLA-6T133WLF(-T)	1CT:1CT	350	1	25
	1CT:1CT	350	1	25

- Ta=25°C

- Conformity to RoHS Directive: This means that, in conformity with EU Directive 2002/95/EC, lead, cadmium, mercury, hexavalent chromium, and specific bromine-based flame retardants, PBB and PBDE, have not been used, except for exempted applications.

- All specifications are subject to change without notice.

PACKAGING STYLES

Quantity : 1000pieces/reel

TAPE DIMENSIONS

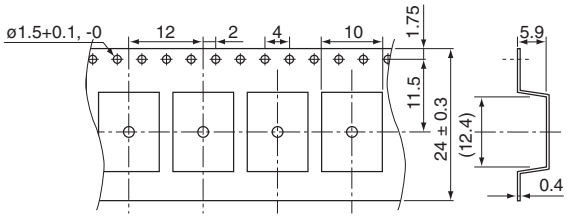

Dimensions in mm

REEL DIMENSIONS

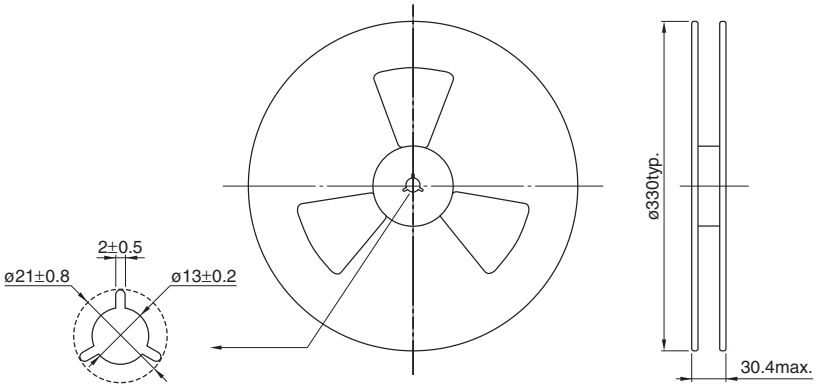

Dimensions in mm

RECOMMENDED SOLDERING CONDITION

REFLOW SOLDERING

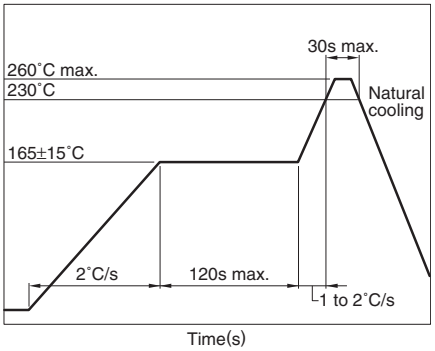

- Temperature is measured at the terminal portion of product (Using thermocoupler for measurement).
- This profile is reference data we recommend. Please check in your actual process.
- For reliable soldering, the thickness of solder paste screen should be over the terminal co-planality.
- The cutted end of terminal has no plating(out of subject of solder ability).

RECOMMENDED CONDITION FOR LONG TERM STORE

When it stores for a long term, please avoid place of high temperature and high humidity. Recommend that it uses after the delivery within 1year.

Temperature range: +5 to +30°C

Humidity: 60(%)RH max.

TDK

TLA-6T214ALF(-T) ISO8802.3(IEEE802.3) 10/100/1000BASE-T

FEATURES

- Product conforming to RoHS directive.
- Can be mounted with lead-free solder (260°C max.).
- 16-pin SMD package(1.27mm=50mil pin pitch).
- Low profile (H)2.1mm max. for note PC application.
- Excellent common mode noise suppression.
- Inductance is 350μH or greater (f=100kHz, DC bias=8mA).
- Using the high-quality and wide-band ferrite cores for LAN.
- Packaging specification is taping and bulk(TLA-6T214ALF-T: Tape and reel, TLA-6T214ALF: Bulk).

GENERAL SPECIFICATIONS

Pulse transformer		2
Common-mode choke		2
Port		1
Temperature ranges	Operating	0 to +70°C
	Storage	–40 to +85°C
Withstanding voltage		Erms:1500V[60s]

SHAPES AND DIMENSIONS

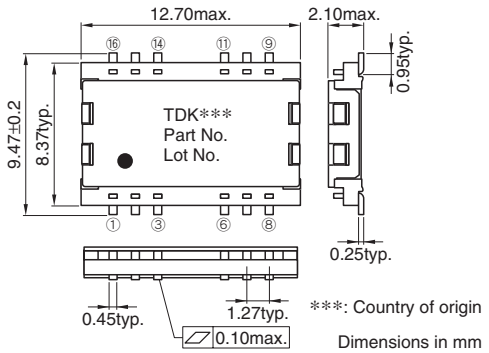

CIRCUIT DIAGRAM

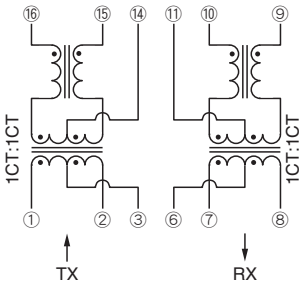

RECOMMENDED PC BOARD PATTERN

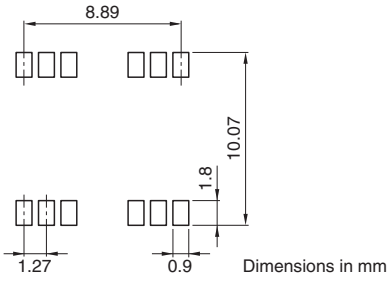

ELECTRICAL CHARACTERISTICS

Part No.	Turns ratio ①③②:⑯⑭⑮ ⑦⑥⑧:⑩⑪⑨	Inductance (μH)min. [DC bias 8mA, 100kHz] ⑯-⑮ ⑩-⑨	Insertion loss (dB)max. [0.1 to 125MHz] ①②-⑯⑮ ⑩⑨-⑦⑧	Inter-winding stray capacitance (pF)max.[100kHz] ①②-⑯⑮ ⑩⑨-⑦⑧
TLA-6T214ALF(-T)	1CT:1CT	350	1	25
	1CT:1CT	350	1	25

- Ta=25°C

- Conformity to RoHS Directive: This means that, in conformity with EU Directive 2002/95/EC, lead, cadmium, mercury, hexavalent chromium, and specific bromine-based flame retardants, PBB and PBDE, have not been used, except for exempted applications.

- All specifications are subject to change without notice.

PACKAGING STYLES

Quantity : 1500pieces/reel

TAPE DIMENSIONS

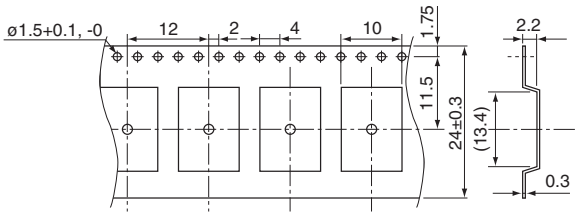

Dimensions in mm

REEL DIMENSIONS

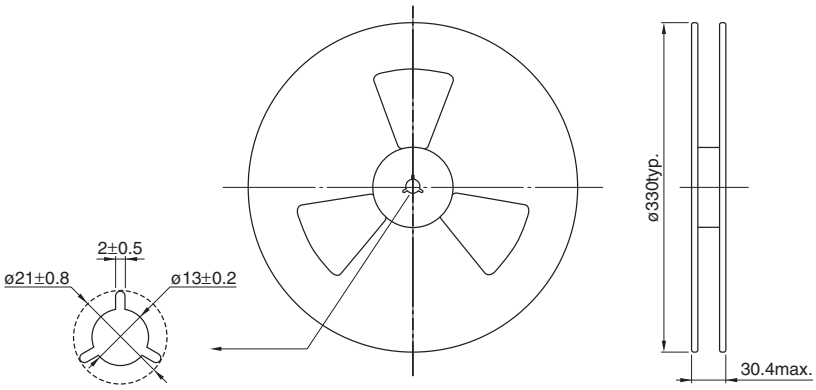

Dimensions in mm

RECOMMENDED SOLDERING CONDITION

REFLOW SOLDERING

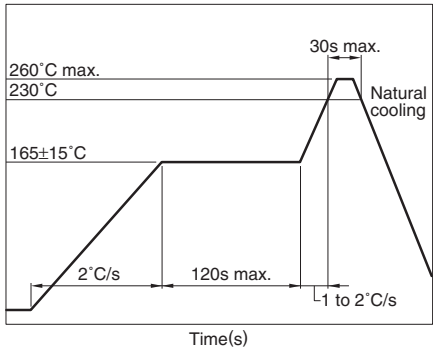

- Temperature is measured at the terminal portion of product (Using thermocoupler for measurement).
- This profile is reference data we recommend. Please check in your actual process.
- For reliable soldering, the thickness of solder paste screen should be over the terminal co-planality.
- The cutted end of terminal has no plating(out of subject of solder ability).

RECOMMENDED STORE CONDITION

The product is packaged by Anti-humid Al bag, in order to keep a good solder ability condition and resistance to soldering heat for products.

- Before aluminum bag opening
  Temperature range: +5 to +40°C
  Humidity: 90(%)RH max.
  Storage period: 1year
- After aluminum bag opening
  Temperature range: +5 to +30°C
  Humidity: 60(%)RH max.
  Storage period: 1week

• All specifications are subject to change without notice.

TLA-6T213LF(-T) ISO8802.3(IEEE802.3) 10/100/1000BASE-T

FEATURES

- Product conforming to RoHS directive.
- Can be mounted with lead-free solder (260°C max.).
- 12-pin SMD package(1.27mm=50mil pin pitch).
- Because it is low profile design of 2.2mm max., space saving is possible and is suitable for notebook PC.
- Excellent common mode noise suppression.
- Inductance is 350μH or greater (f=100kHz, DC bias=8mA).
- Using the high-quality and wide-band ferrite cores for LAN.
- Packaging specification is taping and bulk(TLA-6T213LF-T: Tape and reel, TLA-6T213LF: Bulk).

GENERAL SPECIFICATIONS

Pulse transformer		2
Common-mode choke		2
Port		1
Temperature ranges	Operating	0 to +70°C
	Storage	–40 to +85°C
Withstanding voltage		Erms:1500V[60s]

SHAPES AND DIMENSIONS

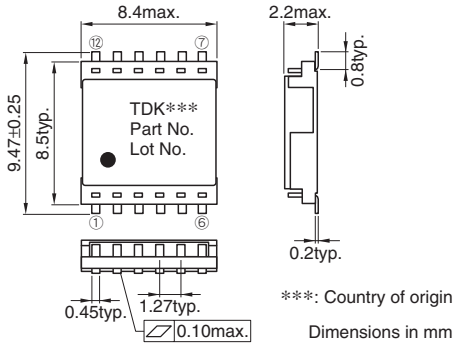

CIRCUIT DIAGRAM

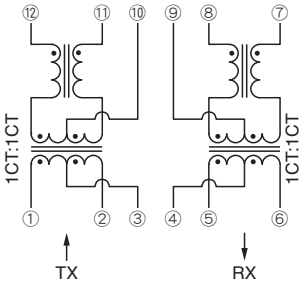

RECOMMENDED PC BOARD PATTERN

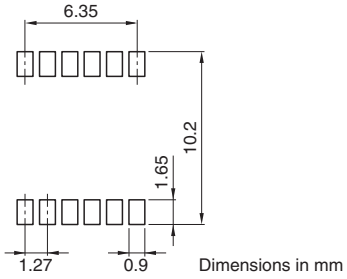

ELECTRICAL CHARACTERISTICS

Part No.	Turns ratio ①③②:⑫⑩⑪ ⑤④⑥:⑧⑨⑦	Inductance (μH)min. [DC bias 8mA, 100kHz] ⑫-⑪ ⑧-⑦	Insertion loss (dB)max. [0.1 to 100MHz] ①②-⑫⑪ ⑧⑦-⑤⑥	Inter-winding stray capacitance (pF)max.[100kHz] ①②-⑫⑪ ⑧⑦-⑤⑥
TLA-6T213LF(-T)	1CT:1CT	350	1	25

- Ta=25°C

- Conformity to RoHS Directive: This means that, in conformity with EU Directive 2002/95/EC, lead, cadmium, mercury, hexavalent chromium, and specific bromine-based flame retardants, PBB and PBDE, have not been used, except for exempted applications.

- All specifications are subject to change without notice.

PACKAGING STYLES

Quantity : 1500pieces/reel

TAPE DIMENSIONS

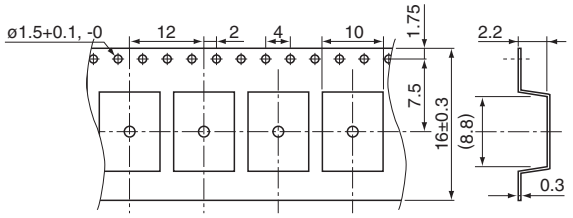

Dimensions in mm

REEL DIMENSIONS

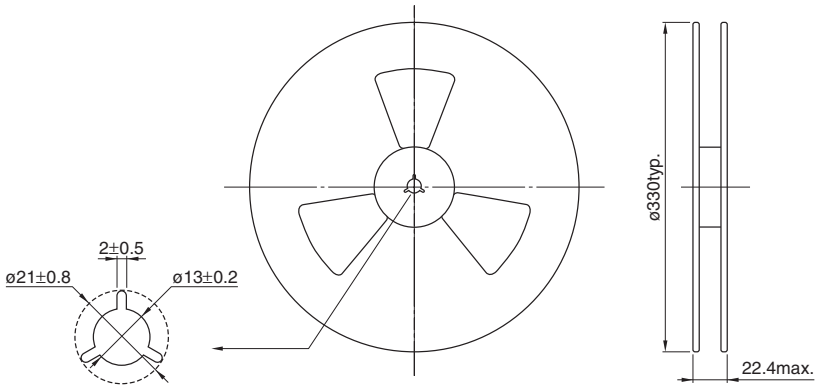

Dimensions in mm

RECOMMENDED SOLDERING CONDITION

REFLOW SOLDERING

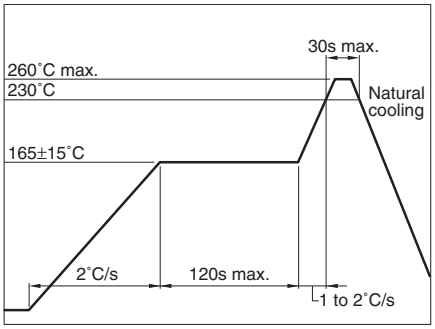

- Temperature is measured at the terminal portion of product (Using thermocoupler for measurement).
- This profile is reference data we recommend. Please check in your actual process.
- For reliable soldering, the thickness of solder paste screen should be over the terminal co-planality.
- The cutted end of terminal has no plating(out of subject of solder ability).

RECOMMENDED STORE CONDITION

The product is packaged by Anti-humid Al bag, in order to keep a good solder ability condition and resistance to soldering heat for products.

- Before aluminum bag opening
  Temperature range: +5 to +40°C
  Humidity: 90(%)RH max.
  Storage period: 1year
- After aluminum bag opening
  Temperature range: +5 to +30°C
  Humidity: 60(%)RH max.
  Storage period: 1week

• All specifications are subject to change without notice.

TLA-7T201LF(-T) ISO8802.3(IEEE802.3) 10/100/1000BASE-T

FEATURES

- Product conforming to RoHS directive.
- Can be mounted with lead-free solder (260°C max.).
- 24-pin SMD package(1.27mm=50mil pin pitch).
- Because it is low profile design of 2.2mm max., space saving is possible and is suitable for notebook PC.
- Excellent common mode noise suppression.
- Inductance is 350μH or greater (f=100kHz, DC bias=8mA).
- Using the high-quality and wide-band ferrite cores for LAN.
- Packaging specification is taping and bulk(TLA-7T201LF-T: Tape and reel, TLA-7T201LF: Bulk).

GENERAL SPECIFICATIONS

Pulse transformer		4
Common-mode choke		4
Port		1[1000BASE-T]
Temperature ranges	Operating	0 to +70°C
	Storage	–40 to +85°C
Withstanding voltage		Erms:1500V[60s]

SHAPES AND DIMENSIONS

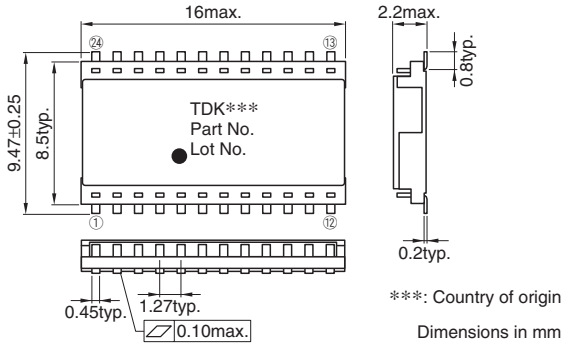

CIRCUIT DIAGRAM

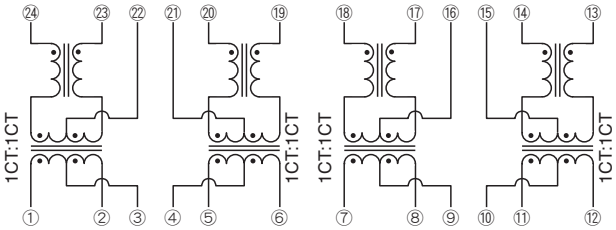

RECOMMENDED PC BOARD PATTERN

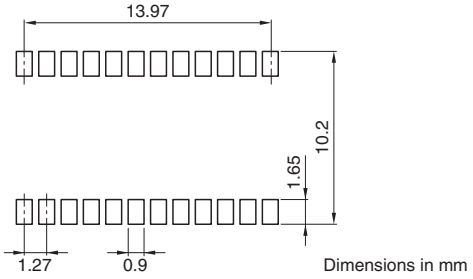

ELECTRICAL CHARACTERISTICS

Part No.	Turns ratio ①③②:㉔㉒㉓ ⑤④⑥:⑳㉑⑲ ⑦⑨⑧:⑱⑯⑰ ⑪⑩⑫:⑭⑮⑬	Inductance (μH)min. [DC bias 8mA, 100kHz] ㉔-㉓ ⑳-⑲ ⑱-⑰ ⑭-⑬	Insertion loss (dB)max. [0.1 to 100MHz] ①②-㉔㉓ ⑤⑥-⑳⑲ ⑦⑧-⑱⑰ ⑪⑫-⑭⑬	Inter-winding stray capacitance (pF)max.[100kHz] ①②-㉔㉓ ⑤⑥-⑳⑲ ⑦⑧-⑱⑰ ⑪⑫-⑭⑬
TLA-7T201LF(-T)	1CT:1CT	350	1	25

- Ta=25°C

- Conformity to RoHS Directive: This means that, in conformity with EU Directive 2002/95/EC, lead, cadmium, mercury, hexavalent chromium, and specific bromine-based flame retardants, PBB and PBDE, have not been used, except for exempted applications.

- All specifications are subject to change without notice.

PACKAGING STYLES

Quantity : 1500pieces/reel

TAPE DIMENSIONS

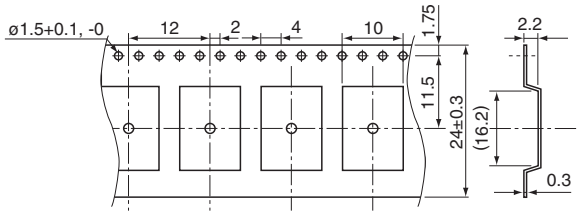

Dimensions in mm

REEL DIMENSIONS

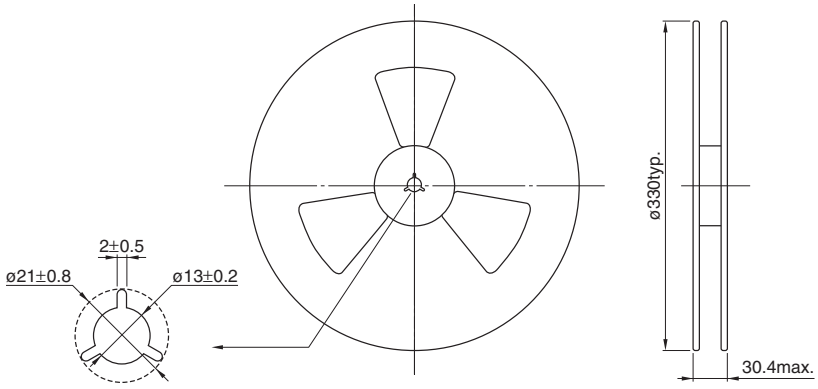

Dimensions in mm

RECOMMENDED SOLDERING CONDITION

REFLOW SOLDERING

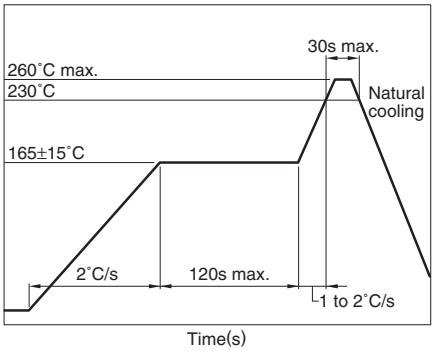

- Temperature is measured at the terminal portion of product (Using thermocoupler for measurement).
- This profile is reference data we recommend. Please check in your actual process.
- For reliable soldering, the thickness of solder paste screen should be over the terminal co-planality.
- The cutted end of terminal has no plating(out of subject of solder ability).

RECOMMENDED STORE CONDITION

The product is packaged by Anti-humid Al bag, in order to keep a good solder ability condition and resistance to soldering heat for products.

- Before aluminum bag opening
  Temperature range: +5 to +40°C
  Humidity: 90(%)RH max.
  Storage period: 1year
- After aluminum bag opening
  Temperature range: +5 to +30°C
  Humidity: 60(%)RH max.
  Storage period: 1week

• All specifications are subject to change without notice.

TLA-6T406(-T) ISO8802.3(IEEE802.3) 10/100BASE-TX

FEATURES

- Product conforming to RoHS directive.
- Can be mounted with lead-free solder (250°C max.).
- 40-pin SMD package(1.27mm=50mil pin pitch) for Quad port.
- Excellent common-mode noise suppression.
- Inductance is 350μH or greater (f=100kHz, DC bias=8mA).
- Using the high-quality and wide-band ferrite cores for LAN.
- Packaging specification is taping and bulk(TLA-6T406-T: Tape and reel, TLA-6T406: Bulk).

GENERAL SPECIFICATIONS

Pulse transformer		8
Common-mode choke		8
Port		4
Temperature ranges	Operating	0 to +70°C
	Storage	–40 to +85°C
Withstanding voltage		Erms:1500V[60s]

SHAPES AND DIMENSIONS

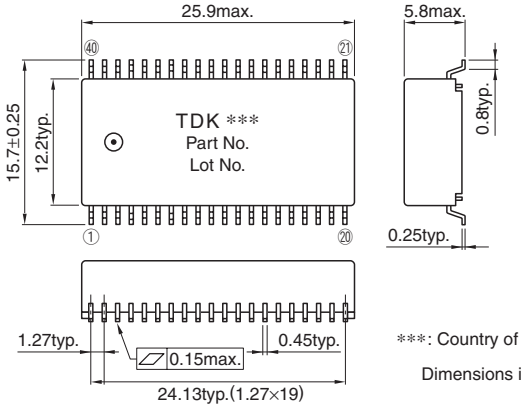

***: Country of origin

Dimensions in mm

CIRCUIT DIAGRAM

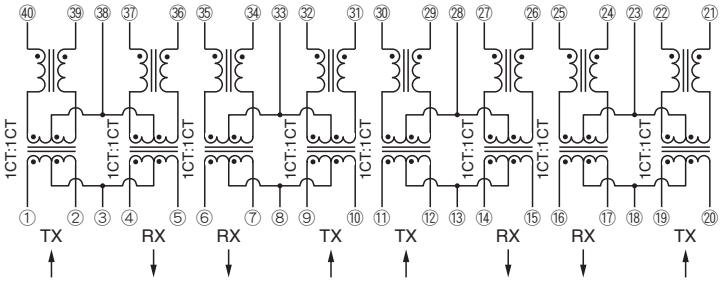

RECOMMENDED PC BOARD PATTERN

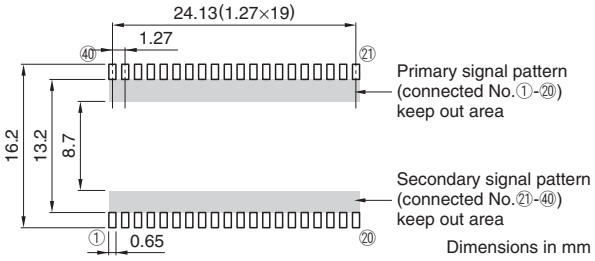

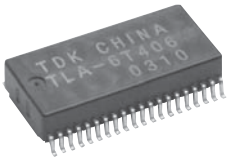

ELECTRICAL CHARACTERISTICS

Part No.	Turns ratio ①③②:㊵㊳㊴..... ④③⑤:㊲㊳㊱.....	Inductance (μH)min. [DC bias 8mA, 100kHz] ㊵-㊴..... ㊲-㊱.....	Insertion loss (dB)max. [0.1 to 100MHz] ①②-㊵㊴..... ④⑤-㊲㊱.....	Inter-winding stray capacitance (pF)max.[100kHz] ①②-㊵㊴..... ④⑤-㊲㊱.....
TLA-6T406(-T)	1CT:1CT	350	1	40
	1CT:1CT	350	1	40

- Ta=25°C

- Conformity to RoHS Directive: This means that, in conformity with EU Directive 2002/95/EC, lead, cadmium, mercury, hexavalent chromium, and specific bromine-based flame retardants, PBB and PBDE, have not been used, except for exempted applications.

- All specifications are subject to change without notice.

PACKAGING STYLES

Quantity : 500pieces/reel

TAPE DIMENSIONS

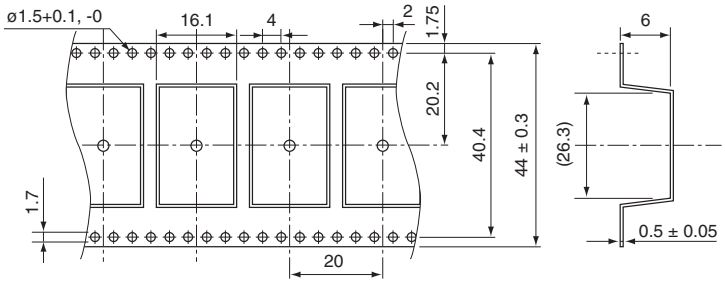

Dimensions in mm

REEL DIMENSIONS

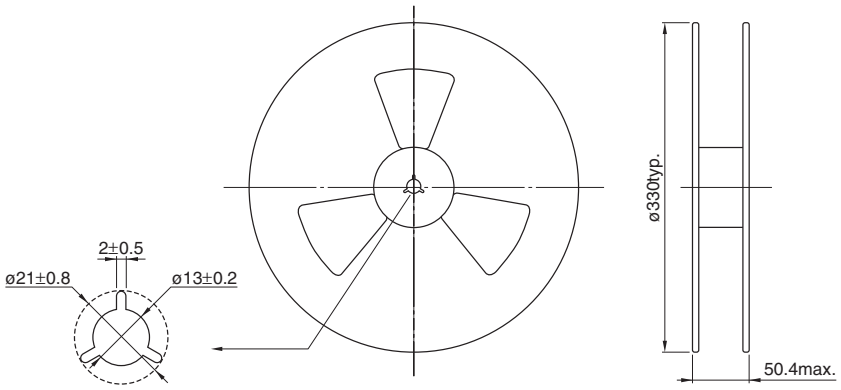

Dimensions in mm

RECOMMENDED SOLDERING CONDITION

REFLOW SOLDERING

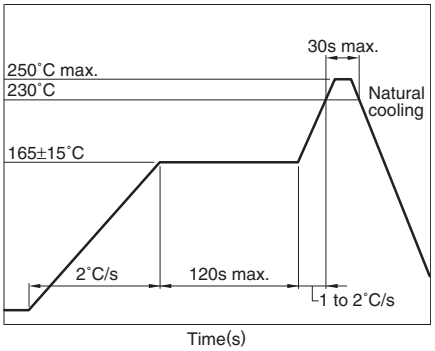

- Temperature is measured at the terminal portion of product (Using thermocoupler for measurement).
- This profile is reference data we recommend. Please check in your actual process.
- For reliable soldering, the thickness of solder paste screen should be over the terminal co-planality.
- The cutted end of terminal has no plating(out of subject of solder ability).

RECOMMENDED STORE CONDITION

The product is packaged by Anti-humid Al bag, in order to keep a good solder ability condition and resistance to soldering heat for products.

- Before aluminum bag opening
  Temperature range: +5 to +40°C
  Humidity: 90(%)RH max.
  Storage period: 1year
- After aluminum bag opening
  Temperature range: +5 to +30°C
  Humidity: 60(%)RH max.
  Storage period: 1week

• All specifications are subject to change without notice.

TLA-7T101LF(-T) ISO8802.3(IEEE802.3) 10/100/1000BASE-T

FEATURES

- Product conforming to RoHS directive.
- Can be mounted with lead-free solder (260°C max.).
- 24-pin SMD package(1.27mm=50mil pin pitch).
- Excellent common-mode noise suppression.
- Inductance is 350μH or greater (f=100kHz, DC bias=8mA).
- Using the high-quality and wide-band ferrite cores for LAN.
- Packaging specification is taping and bulk(TLA-7T101LF-T: Tape and reel, TLA-7T101LF: Bulk).

GENERAL SPECIFICATIONS

Pulse transformer		4
Common-mode choke		4
Port		1(1000BASE-T)
Temperature ranges	Operating	–40 to +85°C
	Storage	–40 to +85°C
Withstanding voltage		Erms:1500V[60s]

SHAPES AND DIMENSIONS

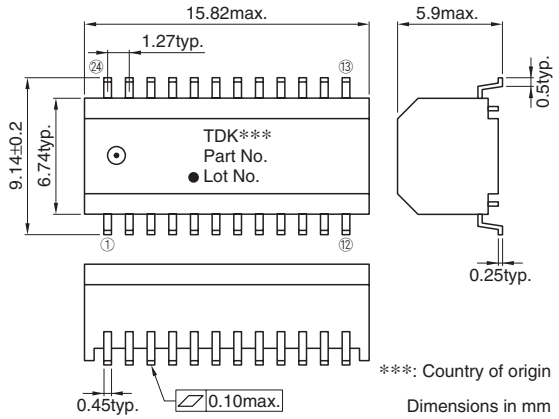

CIRCUIT DIAGRAM

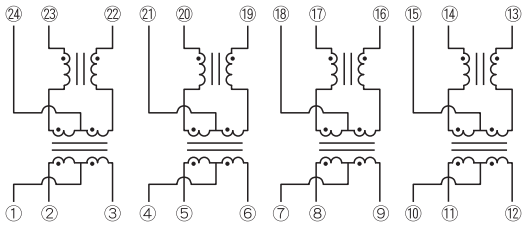

RECOMMENDED PC BOARD PATTERN

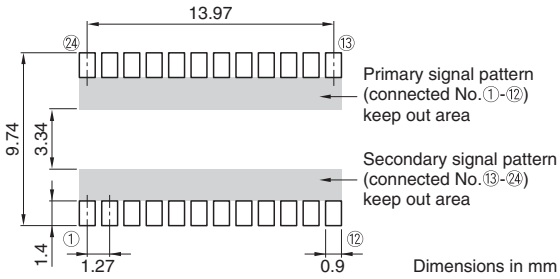

ELECTRICAL CHARACTERISTICS

Part No.	Turns ratio ②①③ : ㉓㉔㉒ ⑤④⑥ : ⑳㉑⑲ ⑧⑦⑨ : ⑰⑱⑯ ⑪⑩⑫ : ⑭⑮⑬	Inductance (μH)min. [DC bias 8mA, 100kHz] ㉓-㉒ ⑳-⑲ ⑰-⑯ ⑭-⑬	Insertion loss (dB)max. [0.1 to 100MHz] ②③-㉓㉒ ⑤⑥-⑳⑲ ⑧⑨-⑰⑯ ⑪⑫-⑭⑬	Inter-winding stray capacitance (pF)max.[100kHz] ②③-㉓㉒ ⑤⑥-⑳⑲ ⑧⑨-⑰⑯ ⑪⑫-⑭⑬
TLA-7T101LF(-T)	1CT:1CT	350	1	25

- Ta=25°C

- Conformity to RoHS Directive: This means that, in conformity with EU Directive 2002/95/EC, lead, cadmium, mercury, hexavalent chromium, and specific bromine-based flame retardants, PBB and PBDE, have not been used, except for exempted applications.

- All specifications are subject to change without notice.

PACKAGING STYLES

Quantity : 1000pieces/reel

TAPE DIMENSIONS

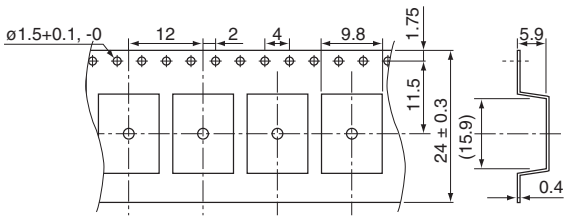

Dimensions in mm

REEL DIMENSIONS

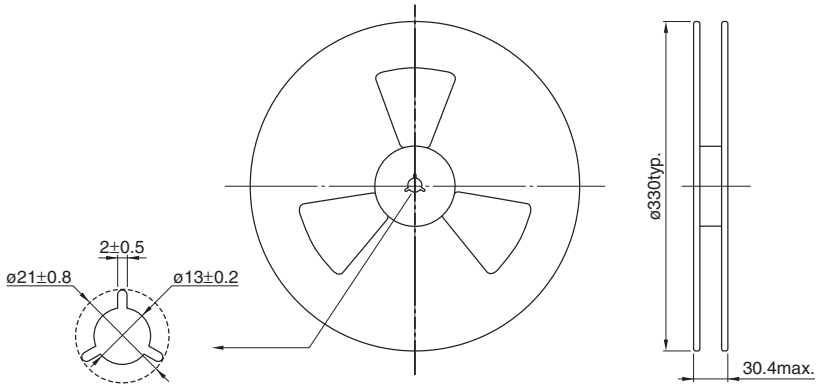

Dimensions in mm

RECOMMENDED SOLDERING CONDITION

REFLOW SOLDERING

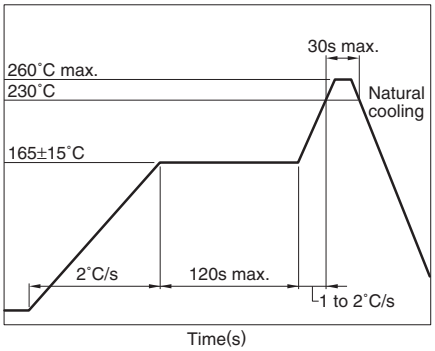

- Temperature is measured at the terminal portion of product (Using thermocoupler for measurement).
- This profile is reference data we recommend. Please check in your actual process.
- For reliable soldering, the thickness of solder paste screen should be over the terminal co-planality.
- The cutted end of terminal has no plating(out of subject of solder ability).

RECOMMENDED CONDITION FOR LONG TERM STORE

When it stores for a long term, please avoid place of high temperature and high humidity. Recommend that it uses after the delivery within 1year.

Temperature range: +5 to +30°C

Humidity: 60(%)RH max.

Pulse Transformers/Connector Type

TLA-6T776F ISO8802.3(IEEE802.3) 10/100BASE-TX

FEATURES

- Product conforming to RoHS directive.
- Pulse transformer, common mode choke, resistor and high with-standing voltage capacitor are integrated into RJ-45 modular jack.
- Excellent common mode noise suppression.
- Inductance is 200μH or greater (f=100kHz, DC bias=8mA).
- The product features high quality, containing a self-winding surface-mount pulse transformer and common mode choke.

GENERAL SPECIFICATIONS

Pulse transformer		2
Common-mode choke		2
Port		1
Temperature ranges	Operating	–40 to +85°C
	Storage	–40 to +85°C

SHAPES AND DIMENSIONS

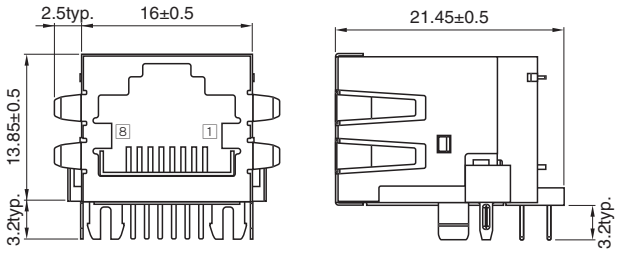

Dimensions in mm

CIRCUIT DIAGRAM

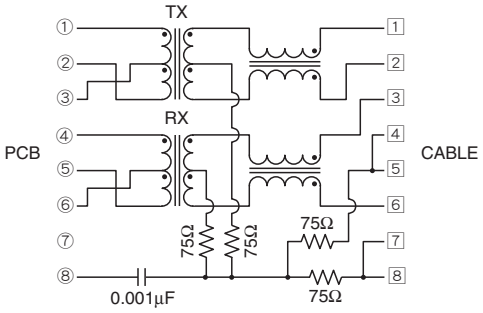

N.C. pin: ⑦

RECOMMENDED PC BOARD PATTERN

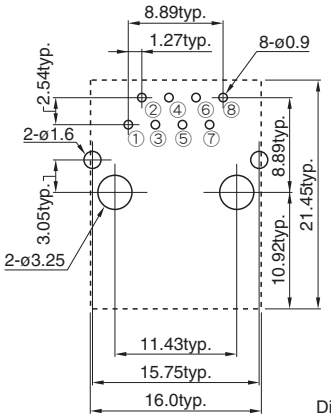

Dimensions in mm

ELECTRICAL CHARACTERISTICS

Part No.	Turns ratio ①③②:1 2 ④⑥⑤:3 6	Inductance (μH)min. [DC bias 8mA, 100kHz] 1-2 3-6	Insertion loss (dB)max. [0.1 to 100MHz] ①②-1 2 3 6-④⑤
TLA-6T776F	1CT:1	200	1.5
	1CT:1	200	1.5

- Ta=25°C

- Conformity to RoHS Directive: This means that, in conformity with EU Directive 2002/95/EC, lead, cadmium, mercury, hexavalent chromium, and specific bromine-based flame retardants, PBB and PBDE, have not been used, except for exempted applications.

- All specifications are subject to change without notice.

PACKAGING STYLES

Tray : 360pieces/box

RECOMMENDED SOLDERING CONDITION

FLOW SOLDERING

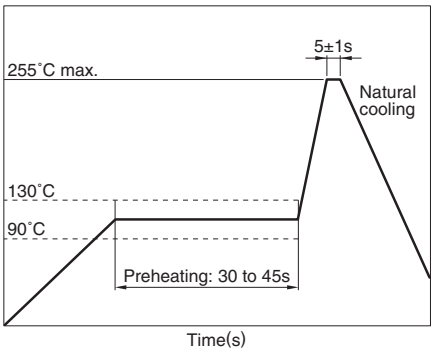

Preheating: 90 to 130°C for 30 to 45 seconds.

Soldering: 255°C max. 5±1 seconds

- Perform flow soldering from the underside of the board.
- The surface of plastic protrusions inserted into the board may melt, but this causes no problems with regard to electrical properties or mounting.
- The cutted end of terminal has no plating(out of subject of solder ability).

RECOMMENDED CONDITION FOR LONG TERM STORE

When it stores for a long term, please avoid place of high temperature and high humidity. Recommend that it uses after the delivery within 1year.

Temperature range: +5 to +40°C

Humidity: 10 to 75%RH max.

TLA-6T785 ISO8802.3(IEEE802.3) 10/100BASE-TX

FEATURES

- Product conforming to RoHS directive.
- Pulse transformer, common mode choke, resistor and high with-standing voltage capacitor are integrated into RJ-45 modular jack.
- Excellent common mode noise suppression.
- Inductance is 200μH or greater (f=100kHz, DC bias=8mA).
- The product features high quality, containing a self-winding surface-mount pulse transformer and common mode choke.

GENERAL SPECIFICATIONS

Pulse transformer		2
Common-mode choke		2
Port		1
Temperature ranges	Operating	–40 to +85°C
	Storage	–40 to +85°C

SHAPES AND DIMENSIONS

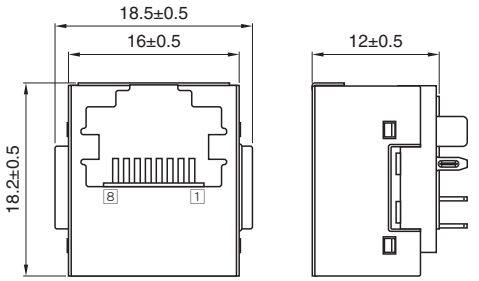

Dimensions in mm

CIRCUIT DIAGRAM

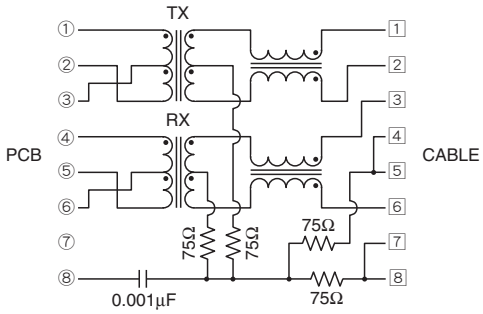

N.C. pin: ⑦

RECOMMENDED PC BOARD PATTERN

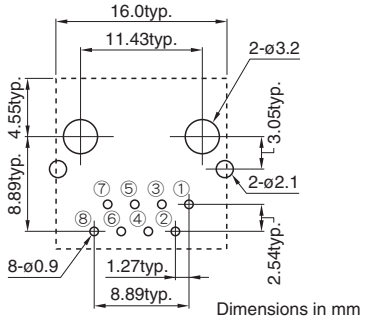

Dimensions in mm

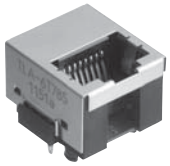

ELECTRICAL CHARACTERISTICS

Part No.	Turns ratio ①③②:1 2 ④⑥⑤:3 6	Inductance (μH)min. [DC bias 8mA, 100kHz] 1-2 3-6	Insertion loss (dB)max. [0.1 to 100MHz] ①②-1 2 3 6-④⑤
TLA-6T785	1CT:1	200	1.5
	1CT:1	200	1.5

- Ta=25°C

- Conformity to RoHS Directive: This means that, in conformity with EU Directive 2002/95/EC, lead, cadmium, mercury, hexavalent chromium, and specific bromine-based flame retardants, PBB and PBDE, have not been used, except for exempted applications.

- All specifications are subject to change without notice.

PACKAGING STYLES

Tray : 500pieces/box

RECOMMENDED SOLDERING CONDITION

FLOW SOLDERING

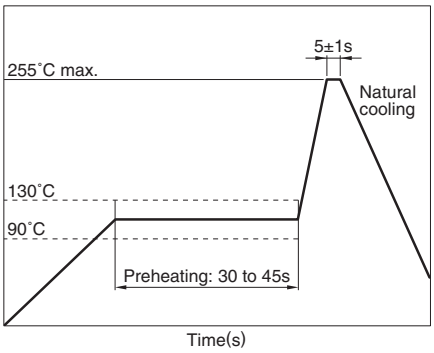

Preheating: 90 to 130°C for 30 to 45 seconds.

Soldering: 255°C max. 5±1 seconds

- Perform flow soldering from the underside of the board.
- The surface of plastic protrusions inserted into the board may melt, but this causes no problems with regard to electrical properties or mounting.
- The cutted end of terminal has no plating(out of subject of solder ability).

RECOMMENDED CONDITION FOR LONG TERM STORE

When it stores for a long term, please avoid place of high temperature and high humidity. Recommend that it uses after the delivery within 1year.

Temperature range: +5 to +40°C

Humidity: 10 to 75%RH max.

LC Modules

TLA-3M103LF(-T) ISO8802.3(IEEE802.3) 10BASE-T

FEATURES

- Product conforming to RoHS directive.
- Can be mounted with lead-free solder (260°C max.).
- 16-pin SMD package (2.54mm=100mil pin pitch).
- Pulse transformer, common-mode choke and low pass filter are integrated into 16-pin SMD package.
- Using the high-quality and wide-band ferrite cores for LAN.
- Packaging specification is taping and bulk(TLA-3M103LF-T: Tape and reel, TLA-3M103LF: Bulk).

GENERAL SPECIFICATIONS

Low pass filter		2
Pulse transformer		2
Common-mode choke		2
Port		1
Temperature ranges	Operating	0 to +70°C
	Storage	–40 to +85°C
Withstanding voltage		Erms:1500V[60s]

SHAPES AND DIMENSIONS

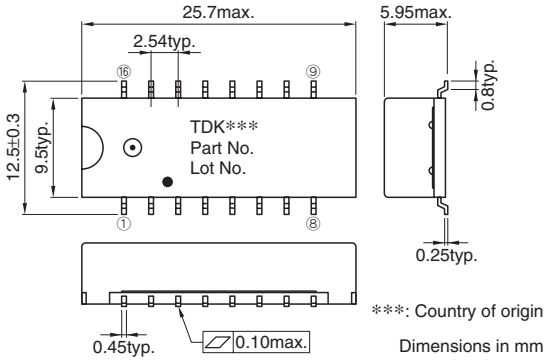

CIRCUIT DIAGRAM

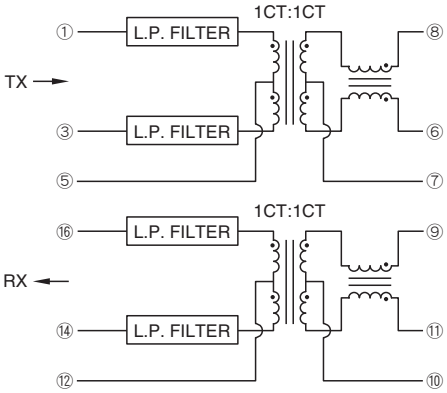

RECOMMENDED PC BOARD PATTERN

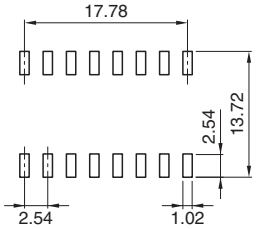

ELECTRICAL CHARACTERISTICS

Part No.	Insertion loss (dB)max.[5 to 10MHz] ①③-⑧⑥ ⑨⑪-⑯⑭	Attenuation (dB)min.[30 to 100MHz] ①③-⑧⑥ ⑨⑪-⑯⑭	Impedance (Ω)typ.[5 to 10MHz] ①-③, ⑧-⑥ ⑯-⑭, ⑨-⑪	C.M.R.R. (dB)min.[1 to 100MHz] ①③-⑧⑥ ⑯⑭-⑨⑪
TLA-3M103LF(-T)	1	25	100, 100	25
	1	25	100, 100	25

- Ta=25°C

- Conformity to RoHS Directive: This means that, in conformity with EU Directive 2002/95/EC, lead, cadmium, mercury, hexavalent chromium, and specific bromine-based flame retardants, PBB and PBDE, have not been used, except for exempted applications.

- All specifications are subject to change without notice.

PACKAGING STYLES

Quantity : 600pieces/reel

TAPE DIMENSIONS

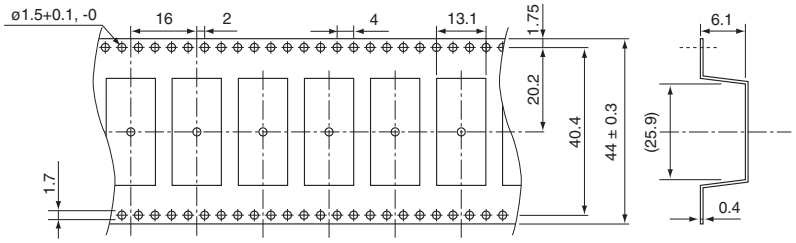

Dimensions in mm

REEL DIMENSIONS

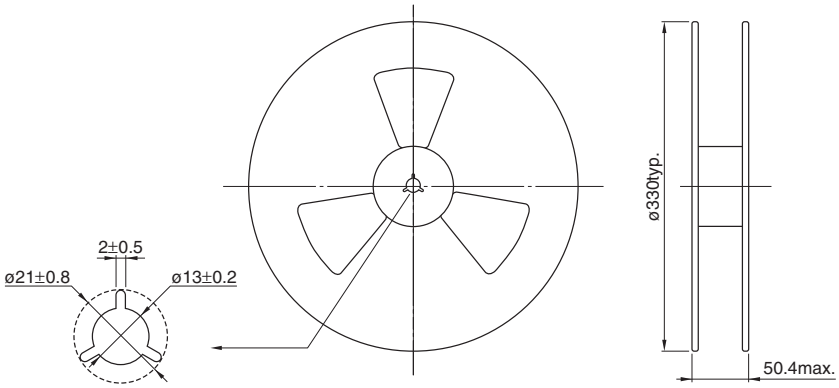

Dimensions in mm

RECOMMENDED SOLDERING CONDITION

REFLOW SOLDERING

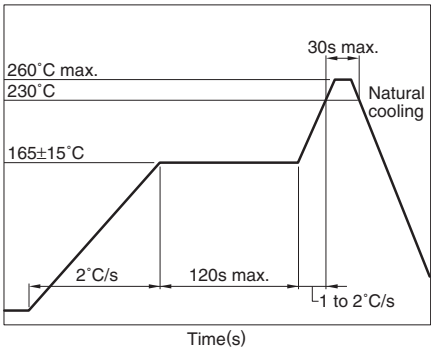

- Temperature is measured at the terminal portion of product (Using thermocoupler for measurement).
- This profile is reference data we recommend. Please check in your actual process.
- For reliable soldering, the thickness of solder paste screen should be over the terminal co-planality.
- The cutted end of terminal has no plating(out of subject of solder ability).

RECOMMENDED CONDITION FOR LONG TERM STORE

When it stores for a long term, please avoid place of high temperature and high humidity. Recommend that it uses after the delivery within 1year.

Temperature range: +5 to +30°C

Humidity: 60(%)RH max.

• All specifications are subject to change without notice.

Pulse Transformers/SMD Type

ALT4532

FEATURES

- The ALT4532 Series is a wound chip type pulse transformer developed for LANs.
- Compatible with 10BASE-T, 100BASE-TX, and 1000BASE-T.
- High-quality product with automatic winding.
- Product conforming to RoHS directive.

APPLICATIONS

LAN interface portion of various devices such as network devices, communication devices, and digital home appliances

PRODUCT IDENTIFICATION

ALT	4532	- 201	- T	001
(1)	(2)	(3)	(4)	(5)

(1) Series name
(2) Dimensions L×W
(3) Inductance[at 100kHz/DC bias=8mA]
201 : 200μH min.
(4) Packaging style
T: ø330mm reel taping
(5) TDK internal code

SPECIFICATIONS

Temperature range	Operating	–40 to +85°C
	Storage(After mount)	–40 to +85°C

PACKAGING STYLE AND QUANTITIES

Packaging style	Reel	Quantity
Taping	ø180mm	2000 pieces/reel

SHAPES AND DIMENSIONS

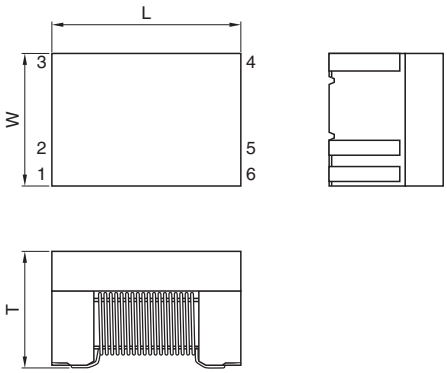

Dimensions in mm

Type	L	W	T
ALT4532-171-T001	4.5±0.2	3.2±0.2	2.2max.
ALT4532-201-T001	4.5±0.2	3.2±0.2	2.9max.

RECOMMENDED PC BORARD PATTERN

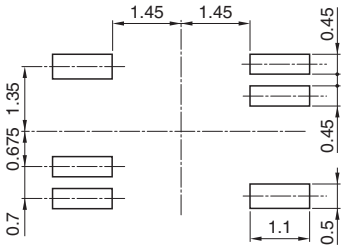

Dimensions in mm

MEASURING CIRCUIT

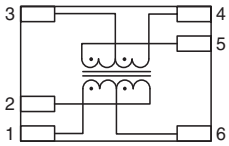

ELECTRICAL CHARACTERISTICS

Part No.	Turns ratio ①⑥② : ⑤③④	Inductance (μH)min. [DC bias 8mA, 100kHz] ①-② ⑤-④	Insertion loss (dB)max. [0.1 to 100MHz] ①②-⑤④	Inter-winding stray capacitance (pF)max. [100kHz]
ALT4532-171-T001	1CT : 1CT	170	2.5	35
ALT4532-201-T001	1CT : 1CT	200	1.5	35

- Conformity to RoHS Directive: This means that, in conformity with EU Directive 2002/95/EC, lead, cadmium, mercury, hexavalent chromium, and specific bromine-based flame retardants, PBB and PBDE, have not been used, except for exempted applications.

- All specifications are subject to change without notice.

TYPICAL ELECTRICAL CHARACTERISTICS

INSERTION LOSS vs. FREQUENCY CHARACTERISTICS

ALT4532-171-T001

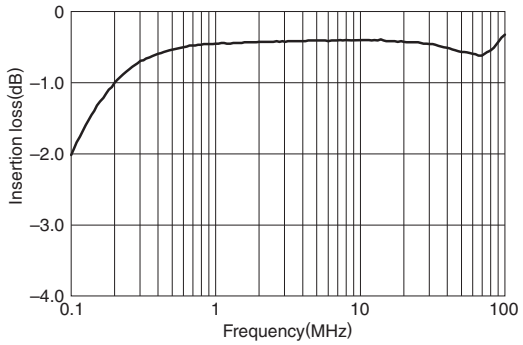

ALT4532-201-T001

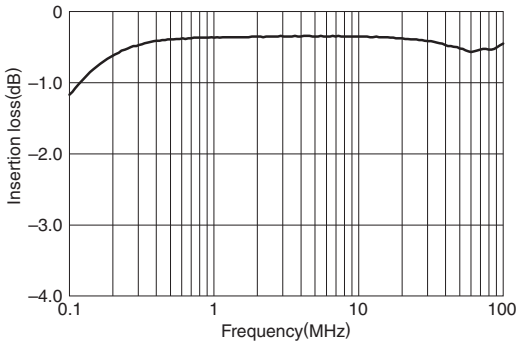

TYPICAL APPLICATIONS (100BASE-TX)

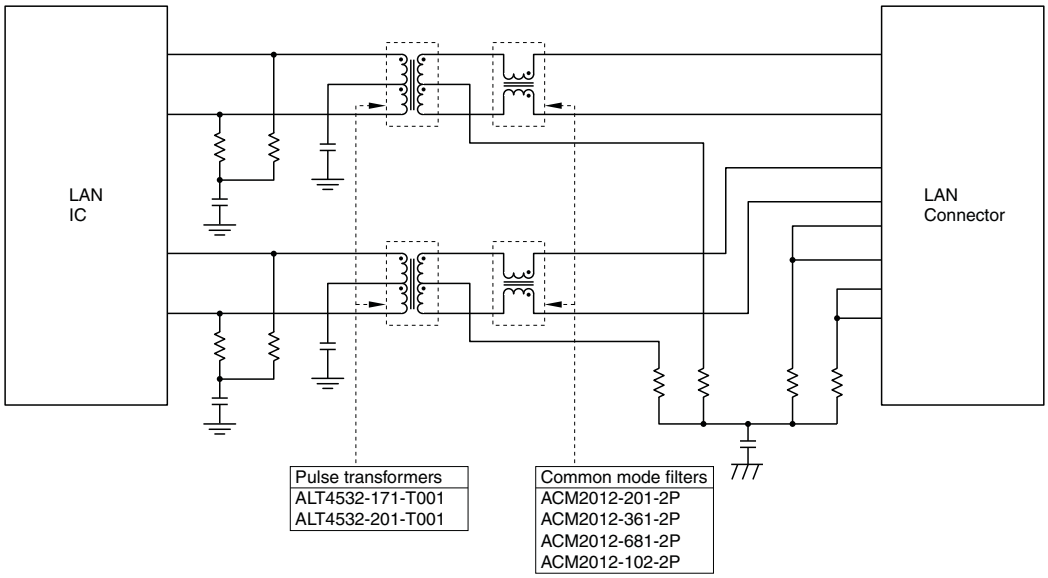

Note) Peripheral circuits differ depending on the IC used; check the circuits with the application note of the IC, etc.

Looking for pricing, stock, or lifecycle information?

Click below to explore more details on WIN SOURCE:

- View TLA-3T105LF on WIN SOURCE
- TDK Corporation Information

Optimize Your Supply Chain with WIN SOURCE Solutions

- Global Sourcing Solution
- Obsolete Management
- Cost Control Management
- Shortage Management
- Alternative Solution
- Excess Inventory Management