THE DATASHEET OF

TPS65086470RSKT

www.win-source.net 0086-755-83957316

TPS650864 Configurable Multirail PMU for Xilinx® MPSoCs and FPGAs

1 Features

- Wide V_{IN} Range from 5.6 V to 21 V
- Three Variable-Output Voltage Synchronous Step-Down Controllers with D-CAP2™ Topology
  - Scalable Output Current Using External FETs With Selectable Current Limit
  - I^2C DVS Control From 0.41 V to 1.67 V in 10-mV Steps or 1 V to 3.575 V in 25-mV Steps
- Three Variable-Output Voltage Synchronous Step-Down Converters With DCS-Control Topology
  - V_{IN} Range From 3 V to 5.5 V
  - Up to 3 A of Output Current
  - I^2C DVS Control From 0.41 V to 1.67 V in 10-mV Steps or 0.425 V to 3.575 V in 25-mV Steps
- Three LDO Regulators With Adjustable Output Voltage
  - LDOA1: I^2C-Selectable Voltage From 1.35 V to 3.3 V for up to 200 mA of Output Current
  - LDOA2 and LDOA3: I^2C-Selectable Voltage From 0.7 V to 1.5 V for up to 600 mA of Output Current Each
- VTT LDO for DDR Memory Termination
- Three Load Switches With Slew Rate Control
  - Up to 300 mA of Output Current With Voltage Drop Less Than 1.5% of Nominal Input Voltage
  - R_{DSON} < 96 mΩ at Input Voltage of 1.8 V
- 5-V Fixed-Output Voltage LDO (LDO5)
  - Power Supply for Gate Drivers of SMPS and for LDOA1
  - Automatic Switch to External 5-V Buck for Higher Efficiency
- Built-in Flexibility and Configurability by Factory OTP Programming
  - Six GPI Pins Configurable to Enable (CTL1 to CTL6) or Sleep Mode Entry (CTL3 and CTL6) of Any Selected Rails
  - Four GPO Pins Configurable to Power Good of Any Selected Rails
  - Open-Drain Interrupt Output Pin
- I^2C Interface Supports Standard Mode (100 kHz), Fast Mode (400 kHz), and Fast Mode Plus (1 MHz)

2 Applications

- Programmable Logic Controller
- Machine Vision Camera
- Video Surveillance
- Test and Measurement
- Embedded PCs
- Motion Control
- Portable Ultrasound

3 Description

The TPS650864 device family is a single-chip power-management IC (PMIC) designed for Xilinx Zynq® multiprocessor system-on-chip (MPSoCs) and field programmable gate array (FPGA) families. The TPS650864 offers an input range of 5.6 V to 21 V, enabling a wide range of applications (see the *Device Comparison Table*). The device is targeted for wall-powered applications or 2S, 3S, or 4S Li-Ion battery packs (NVDC or non-NVDC power architectures). See the *Typical Application* section for 5-V input supplies. The D-CAP2 and DCS-Control high-frequency voltage regulators use small passives to achieve a small solution size. The D-CAP2 and DCS-Control topologies have excellent transient response performance, ideal for processor core and system memory rails that have fast load switching. An I^2C interface allows simple control either by an embedded controller (EC) or by an SoC. The PMIC comes in an 8-mm × 8-mm, single-row VQFN package with thermal pad for good thermal dissipation.

Device Information(1)

PART NUMBER	PACKAGE	BODY SIZE (NOM)
TPS650864 (2)	VQFN (64)	8.00 mm × 8.00 mm

(1) For more information, see the *Mechanical, Packaging, and Orderable Information* section.
(2) For device options, see the *Device Comparison Table*.

An IMPORTANT NOTICE at the end of this data sheet addresses availability, warranty, changes, use in safety-critical applications, intellectual property matters and other important disclaimers. PRODUCTION DATA.

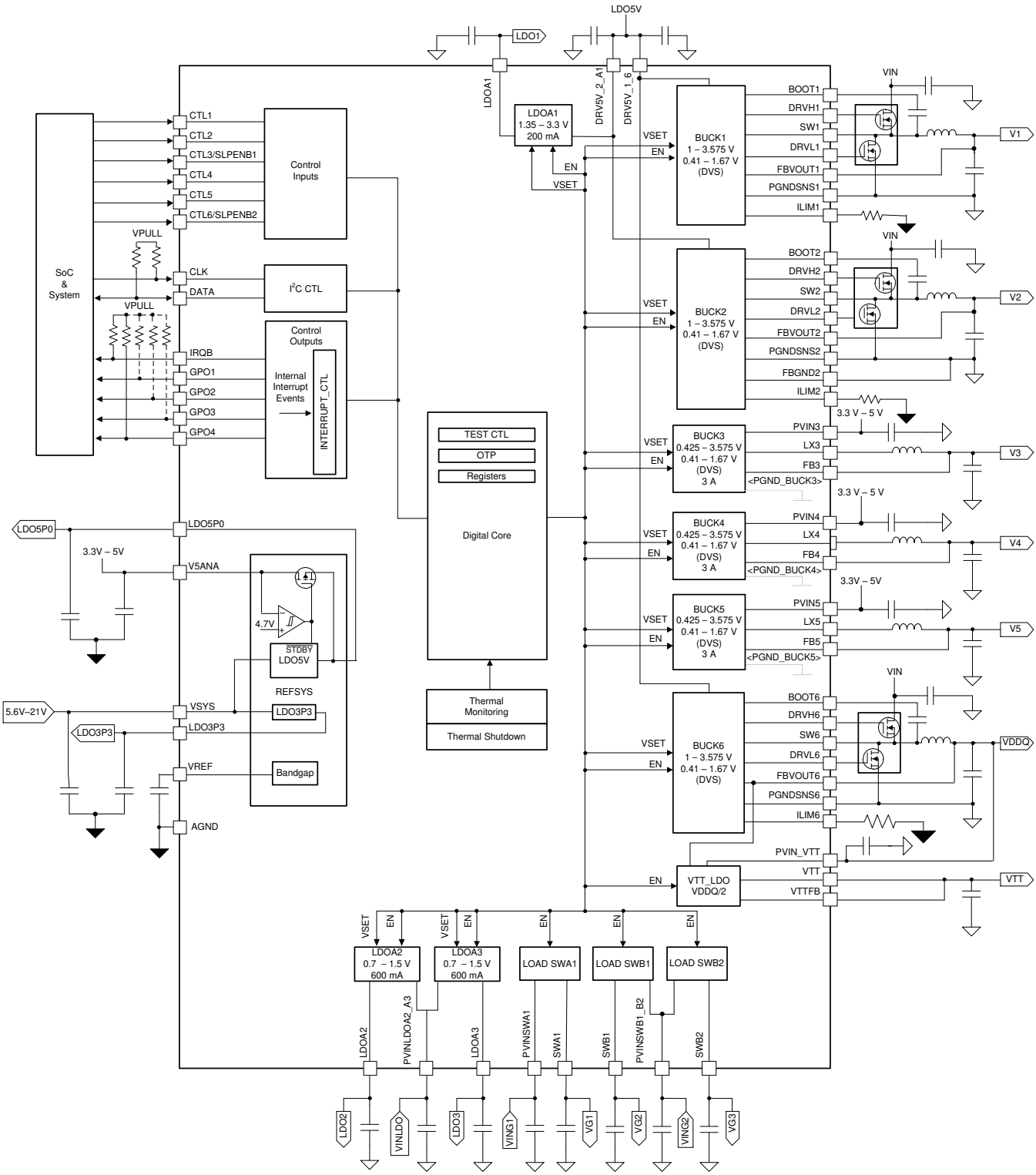

Figure 3-1. PMIC Functional Block Diagram

Copyright © 2022 Texas Instruments Incorporated

Table of Contents

1 Features....1
2 Applications....1
3 Description....1
4 Revision History....3
5 Device Comparison Table....5
6 Pin Configuration and Functions....6
7 Specifications....9
7.1 Absolute Maximum Ratings....9
7.2 ESD Ratings....9
7.3 Recommended Operating Conditions....10
7.4 Thermal Information....10
7.5 Electrical Characteristics: Total Current Consumption....10
7.6 Electrical Characteristics: Reference and Monitoring System....11
7.7 Electrical Characteristics: Buck Controllers....12
7.8 Electrical Characteristics: Synchronous Buck Converters....13
7.9 Electrical Characteristics: LDOs....14
7.10 Electrical Characteristics: Load Switches....16
7.11 Digital Signals: I^{2}C Interface....17
7.12 Digital Input Signals (CTLx)....17
7.13 Digital Output Signals (IRQB, GPOx)....17
7.14 Timing Requirements....17
7.15 Switching Characteristics....17
7.16 Typical Characteristics....19
8 Detailed Description....21
8.1 Overview....21
8.2 Functional Block Diagram....22
8.3 TPS6508640 Design and Settings....24
8.4 TPS65086401 Design and Settings....29
8.5 TPS6508641 Design and Settings....33
8.6 TPS65086470 Design and Settings....39
8.7 SMPS Voltage Regulators....43
8.8 LDOs and Load Switches....51
8.9 Power Goods (PGOOD or PG) and GPOs....51
8.10 Power Sequencing and VR Control....53
8.11 Device Functional Modes....58
8.12 I^{2}C Interface....58
8.13 Register Maps....62
9 Applications, Implementation, and Layout....107
9.1 Application Information....107
9.2 Typical Application....107
9.3 Power Supply Coupling and Bulk Capacitors....118
9.4 Do's and Don'ts....118
10 Device and Documentation Support....119
10.1 Device Support....119
10.2 Documentation Support....119
10.3 Receiving Notification of Documentation Updates 119
10.4 Support Resources....119
10.5 Trademarks....119
10.6 Electrostatic Discharge Caution....119
10.7 Glossary....120
11 Mechanical, Packaging, and Orderable Information....120

4 Revision History

NOTE: Page numbers for previous revisions may differ from page numbers in the current version.

Changes from Revision D (November 2020) to Revision E (December 2022) **Page**

- Changed the power-up sequence for TPS6508640 in the *TPS6508640 Power-Up Sequence* diagram.... 24
- Changed the power-down sequence for TPS6508640 in the *TPS6508640 Power-Down Sequence* diagram.... 24
- Changed the OTP_VERSION[1:0] bits from 01 to 10 for the TPS6508640 device in the *DEVICEID2 Register* table....64
- Changed the OTP_VERSION[1:0] bits from 00 to 01 for the TPS65086401 and TPS6506470 devices in the *DEVICEID2 Register* table....64

Changes from Revision C (June 2018) to Revision D (November 2020) **Page**

- Updated the numbering format for tables, figures, and cross-references throughout the document....1
- Changed the incorrect LX3 pin description from *connect to ground when not in use* to *leave floating when not in use* in the *Pin Functions* table....6
- Removed the line above the LDOA1 block in the *PMIC Functional Block Diagram* 22
- Removed incorrect VREF notes from the middle and right DDR blocks in the *Power Map Example* figure.... 22
- Added *when configured as push-pull, LDO3P3 is used for logic-level high* to the *Power Good Tree* figure description 51
- Changed the bit values for BUCK4_MODE bits in the *BUCK4CTRL Register* table from 0 to 1 for the TPS65086401 and TPS65086470 devices 69
- Changed the bit values for BUCK5_MODE bits in the *BUCK5CTRL Register* table from 0 to 1 for the TPS65086401 and TPS65086470 devices 70
- Added links and step ranges to *BUCK2SLPCTRL Register Descriptions* table.... 78

- Changed the bit values for BUCK3_MODE bits in the *BUCK123CTRL Register* table from 0 to 1 for the TPS65086401 and TPS65086470 devices....82
- Removed the incorrect VREF notes from the middle and right DDR blocks in the *VIN 5-V Application* diagram 107

Changes from Revision B (December 2017) to Revision C (June 2018) **Page**

- Added TPS6508640 and TPS6508641 to data manual 1
- Added typical MPSoC variants to *Device Comparison Table* 5
- Added BUCKx_MODE test condition for quiescent current 13
- Added BUCKx_MODE information to relevant graphs 19
- Changed the *TPS65086401 Power Map Example* in the *TPS65086401 Design and Settings* section....29
- Changed the *TPS65086470 Power Map Example* in the *TPS65086470 Design and Settings* section 39
- Added information regarding ILIM resistor minimum value for Force PWM condition 50

Changes from Revision A (November 2017) to Revision B (December 2017) **Page**

- Changed TPS65086401 from preview to production data....5

Changes from Revision * (February 2017) to Revision A (November 2017) **Page**

- Changed device status from: PRODUCT PREVIEW to: PRODUCTION DATA 1
- Added pin connection when unused....6
- Changed the *TPS65086401 Power Map Example* in the *TPS65086401 Design and Settings* section....29
- Fixed SWB1 and SWB2 current to 0.4A from 0.3A 39
- Changed typo from TPS6508470 to TPS65086470.... 42
- Changed description to *Sleep State* from *Connected Standby* for consistency in the *Sleep State Entry and Exit* section.... 57
- Changed the description of all PGOODs in the note in the *Sleep State Entry and Exit* section from *stay* to *can stay* because the behavior can vary based on the part-number specific settings.... 57
- Added failure to reach power good within 10 ms as emergency shutdown condition to the *Emergency Shutdown* section.... 57
- Changed bit 0 in the *BUCK3VID Register* register to Read only (R) 68
- Changed the *PG_DELAY2: 2nd Power Good Delay Register* description from *GPO3* to *GPO1, GPO2, and GPO4* 83
- Fixed a typo which showed the '000' option resulting in 2.5 ms instead of 0 ms in the *PG_DELAY2 Register Descriptions* table.... 83

Copyright © 2022 Texas Instruments Incorporated

5 Device Comparison Table

Table 5-1 lists a brief summary of the default values for each part number stored in one-time programmable (OTP) memory. A full summary of each part number can be found in the applications section linked in the *SECTION* column. The step size is indicated by the values in parenthesis. If alternate voltages are available through pin-strapping, they are separated with a comma.

Table 5-1. Default Values

PART NUMBER	APPLICATION	BUCK1	BUCK2	BUCK3	BUCK4	BUCK5	BUCK6	LDOA1	LDOA2	LDOA3	SECTION
TPS6508640	Xilinx Zynq Ultrascale+ ZU7 - ZU15(1)	3.3 V (25 mV)	0.85 V, 0.9 V (10 mV)	1.2 V (25 mV)	0.9 V (25 mV)	1.8 V (25 mV)	1.2 V, 1.35 V (10 mV)	2.5 V	1.5 V	1.2 V	Section 8.3
TPS65086401	Xilinx Zynq Ultrascale+ ZU2 - ZU5(1)	1.8 V (25 mV)	0.85 V (10 mV)	0.85 V (25 mV)	3.3 V (25 mV)	3.3 V (25 mV)	1.5 V, 1.2 V, 1.1 V (10 mV)	1.8 V	1.2 V	1.2 V	Section 8.4
TPS6508641	Xilinx Zynq Ultrascale+ ZU2 - ZU5(1)	Ext FB	0.85 V (10 mV)	1.1 V, 1.2 V (25 mV)	3.3 V (25 mV)	1.2 V (25 mV)	1.8 V (25 mV)	1.8 V	1.2 V	1.2 V	Section 8.5
TPS65086470	Xilinx Artix 7(1)	1 V (10 mV)	1.8 V (25 mV)	1.2 V (25 mV)	2.5 V (25 mV)	3.3 V (25 mV)	1.35 V, 1.5 V (25 mV)	1.8 V	0.7 V	0.7 V	Section 8.6

(1) Indicates the original intent of the part number. Parts can be used for alternate applications.

6 Pin Configuration and Functions

Figure 6-1 shows the 64-pin RSK Plastic Quad Flatpack No-Lead package.

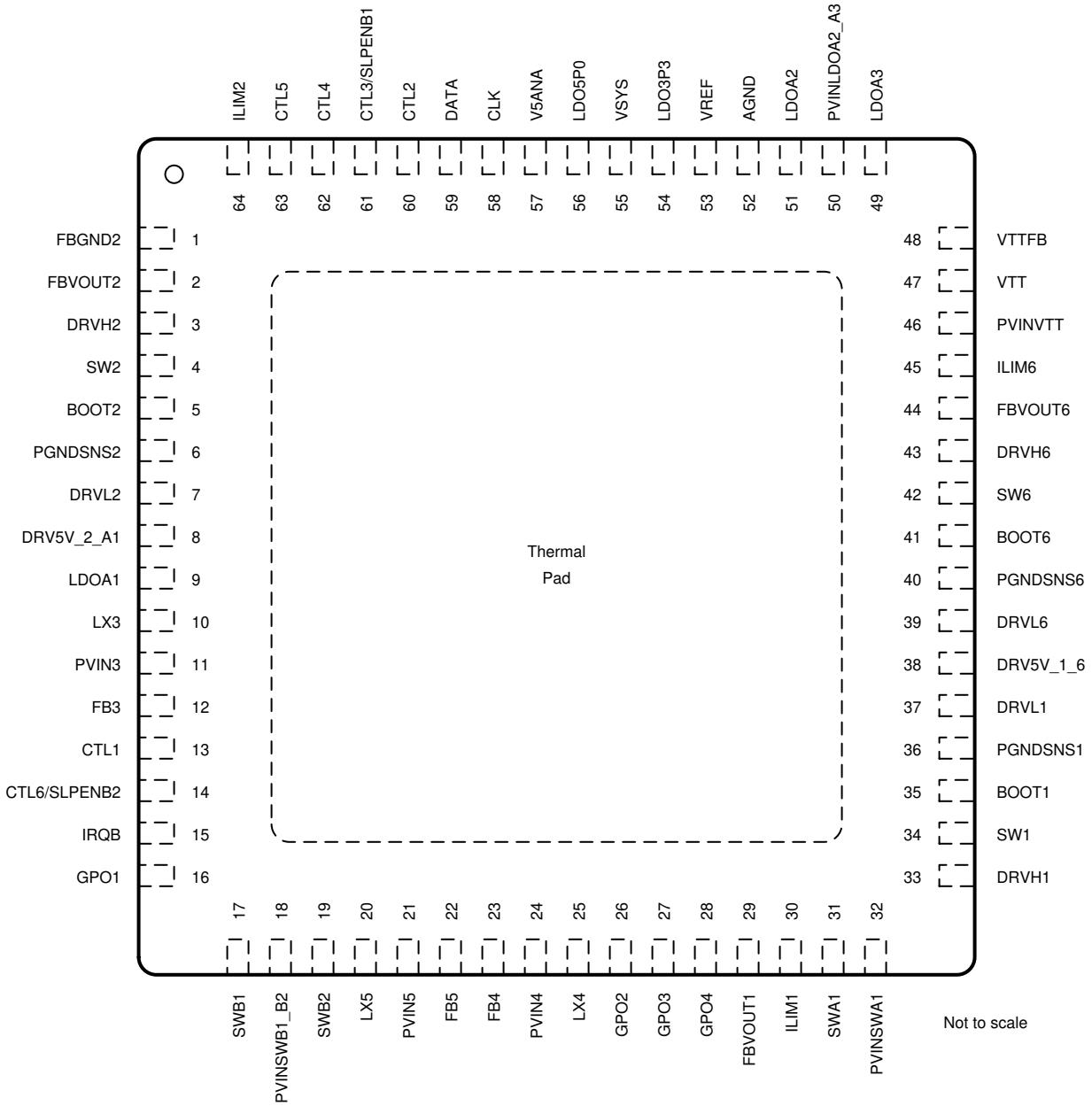

The thermal pad must be connected to the system power ground plane.

Figure 6-1. 64-Pin RSK VQFN With Exposed Thermal Pad (Top View)

Table 6-1. Pin Functions

PIN		I/O	DESCRIPTION
NO.	NAME		
SMPS REGULATORS			
1	FBGND2	I	Remote negative feedback sense for BUCK2 controller. Connect to negative terminal of output capacitor. Connect to ground when not in use.
2	FBVOUT2	I	Remote positive feedback sense for BUCK2 controller. Connect to positive terminal of output capacitor. Connect to ground when not in use.
3	DRVH2	O	High-side gate driver output for BUCK2 controller. Leave floating when not in use.

Copyright © 2022 Texas Instruments Incorporated

Table 6-1. Pin Functions (continued)

PIN		I/O	DESCRIPTION
NO.	NAME		
4	SW2	I	Switch node connection for BUCK2 controller. Connect to ground when not in use.
5	BOOT2	I	Bootstrap pin for BUCK2 controller. Connect a 100-nF ceramic capacitor between this pin and SW2 pin. Leave floating when not in use.
6	PGNDSNS2	I	Power GND connection for BUCK2. Connect to ground terminal of external low-side FET. Connect to ground when not in use.
7	DRVL2	O	Low-side gate driver output for BUCK2 controller. Leave floating when not in use.
8	DRV5V_2_A1	I	5-V supply to BUCK2 gate driver and LDOA1. Bypass to ground with a 2.2-µF (typical) ceramic capacitor. Shorted on board to LDO5P0 pin typically. Bypass not required if BUCK2 and LDOA1 are not in use.
10	LX3	O	Switch node connection for BUCK3 converter. Leave floating when not in use.
11	PVIN3	I	Power input to BUCK3 converter. Bypass to ground with a 10-µF (typical) ceramic capacitor. Bypass not required if BUCK3 is not in use.
12	FB3	I	Remote feedback sense for BUCK3 converter. Connect to positive terminal of output capacitor. Connect to ground when not in use.
20	LX5	O	Switch node connection for BUCK5 converter. Leave floating when not in use.
21	PVIN5	I	Power input to BUCK5 converter. Bypass to ground with a 10-µF (typical) ceramic capacitor. Bypass not required if BUCK5 is not in use.
22	FB5	I	Remote feedback sense for BUCK5 converter. Connect to positive terminal of output capacitor. Connect to ground when not in use.
23	FB4	I	Remote feedback sense for BUCK4 converter. Connect to positive terminal of output capacitor. Connect to ground when not in use.
24	PVIN4	I	Power input to BUCK4 converter. Bypass to ground with a 10-µF (typical) ceramic capacitor. Bypass not required if BUCK4 is not in use.
25	LX4	O	Switch node connection for BUCK4 converter. Leave floating when not in use.
29	FBVOUT1	I	Remote feedback sense for BUCK1 controller. Connect to positive terminal of output capacitor. Connect to ground when not in use.
30	ILIM1	I	Current limit set pin for BUCK1 controller. Fit a resistor from this pin to ground to set current limit of external low-side FET. Connect to ground when BUCK1 not in use.
33	DRVH1	O	High-side gate driver output for BUCK1 controller. Leave floating when not in use.
34	SW1	I	Switch node connection for BUCK1 controller. Connect to ground when not in use.
35	BOOT1	I	Bootstrap pin for BUCK1 controller. Connect a 100-nF ceramic capacitor between this pin and SW1 pin. Leave floating when not in use.
36	PGNDSNS1	I	Power GND connection for BUCK1. Connect to ground terminal of external low-side FET. Connect to ground when not in use.
37	DRVL1	O	Low-side gate driver output for BUCK1 controller. Leave floating when not in use.
38	DRV5V_1_6	I	5-V supply to BUCK1 and BUCK6 gate drivers. Bypass to ground with a 2.2-µF (typical) ceramic capacitor. Shorted on board to LDO5P0 pin typically. Bypass not required if BUCK1 and BUCK6 are not in use.
39	DRVL6	O	Low-side gate driver output for BUCK6 controller. Leave floating when not in use.
40	PGNDSNS6	I	Power GND connection for BUCK6. Connect to ground terminal of external low-side FET. Connect to ground when not in use.
41	BOOT6	I	Bootstrap pin for BUCK6 controller. Connect a 100-nF ceramic capacitor between this pin and SW6 pin. Leave floating when not in use.
42	SW6	I	Switch node connection for BUCK6 controller. Connect to ground when not in use.
43	DRVH6	O	High-side gate driver output for BUCK6 controller. Leave floating when not in use.
44	FBVOUT6	I	Remote feedback sense for BUCK6 controller and reference voltage for VTT LDO regulation. Connect to positive terminal of output capacitor. Connect to ground when not in use.
45	ILIM6	I	Current limit set pin for BUCK6 controller. Fit a resistor from this pin to ground to set current limit of external low-side FET. Connect to ground when BUCK6 not in use.
64	ILIM2	I	Current limit set pin for BUCK2 controller. Fit a resistor from this pin to ground to set current limit of external low-side FET. Connect to ground when BUCK2 not in use.
LDO AND LOAD SWITCHES			
9	LDOA1	O	LDOA1 output. Bypass to ground with a 4.7-µF (typical) ceramic capacitor. Leave floating when not in use.
17	SWB1	O	Output of load switch B1. Bypass to ground with a 0.1-µF (typical) ceramic capacitor. Leave floating when not in use.
18	PVINSWB1_B2	I	Power supply to load switch B1 and B2. Bypass to ground with a 1-µF (typical) ceramic capacitor to improve transient performance. Connect to ground when not in use.
19	SWB2	O	Output of load switch B2. Bypass to ground with a 0.1-µF (typical) ceramic capacitor. Leave floating when not in use.
31	SWA1	O	Output of load switch A1. Bypass to ground with a 0.1-µF (typical) ceramic capacitor. Leave floating when not in use.

Copyright © 2022 Texas Instruments Incorporated

Table 6-1. Pin Functions (continued)

PIN		I/O	DESCRIPTION
NO.	NAME		
32	PVINSWA1	I	Power supply to load switch A1. Bypass to ground with a 1-µF (typical) ceramic capacitor to improve transient performance. Connect to ground when not in use.
46	PVINVTT	I	Power supply to VTT LDO. Bypass to ground with a 10-µF (minimum) ceramic capacitor. Bypass not required if VTT LDO is not in use.
47	VTT	O	Output of load VTT LDO. Bypass to ground with 2× 22-µF (minimum) ceramic capacitors. Leave floating when not in use.
48	VTTFB	I	Remote feedback sense for VTT LDO. Connect to positive terminal of output capacitor. Connect to ground when not in use.
49	LDOA3	O	Output of LDOA3. Bypass to ground with a 4.7-µF (typical) ceramic capacitor. Leave floating when not in use.
50	PVINLDOA2_A3	I	Power supply to LDOA2 and LDOA3. Bypass to ground with a 4.7-µF (typical) ceramic capacitor. Connect to ground when not in use.
51	LDOA2	O	Output of LDOA2. Bypass to ground with a 4.7-µF (typical) ceramic capacitor. Leave floating when not in use.
54	LDO3P3	O	Output of 3.3-V internal LDO. Bypass to ground with a 4.7-µF (typical) ceramic capacitor.
56	LDO5P0	O	Output of 5-V internal LDO or an internal switch that connects this pin to V5ANA. Bypass to ground with a 4.7-µF (typical) ceramic capacitor.
57	V5ANA	I	Bias used by converters (BUCK3, BUCK4, and BUCK5) for regulation. Must be same supply as PVINx. Also has an internal load switch that connects this pin to LDO5P0 pin if 5-V is used. Bypass this pin with an optional ceramic capacitor to improve transient performance.
INTERFACE			
13	CTL1	I	Active-high VR enable pin. A group of VRs can be assigned to be enabled at assertion or disabled at deassertion of this pin.
14	CTL6/SLPENB2	I	Active-high VR enable pin. A group of VRs can be assigned to be enabled at assertion or disabled at deassertion of this pin. Alternatively, when configured to active-low sleep enable, a group of VRs chosen can be entered into (L) or out of (H) sleep state where their output voltages may be different from those in normal state.
15	IRQB	O	Open-drain output interrupt pin. Refer to Section 8.13.4, *IRQ: PMIC Interrupt Register*, for definitions.
16	GPO1	O	General purpose output that can be configured to either open-drain or push-pull arrangement. Regardless of the configuration, the pin can be programmed either to reflect Power Good status of VRs of any choice or to be controlled by an I^2C register bit by the user, which then can be used as an enable signal to an external VR.
26	GPO2	O	General purpose output that can be configured to either open-drain or push-pull arrangement. Regardless of the configuration, the pin can be programmed either to reflect Power Good status of VRs of any choice or to be controlled by an I^2C register bit by the user, which then can be used as an enable signal to an external VR.
27	GPO3	O	General purpose output that can be configured to either open-drain or push-pull arrangement. Regardless of the configuration, the pin can be programmed either to reflect Power Good status of VRs of any choice or to be controlled by an I^2C register bit by the user, which then can be used as an enable signal to an external VR.
28	GPO4	O	Open-drain output that can be configured to reflect Power Good status of VRs of any choice or to be controlled by an I^2C register bit by the user, which then can be used as an enable signal to an external VR.
58	CLK	I	I^2C clock
59	DATA	I/O	I^2C data
60	CTL2	I	Active-high VR enable pin. A group of VRs can be assigned to be enabled at assertion or disabled at deassertion of this pin.
61	CTL3/SLPENB1	I	Active-high VR enable pin. A group of VRs can be assigned to be enabled at assertion or disabled at deassertion of this pin. Alternatively, when configured to active-low sleep enable, a group of VRs chosen can be entered into (L) or out of (H) sleep state where their output voltages may be different from those in normal state.
62	CTL4	I	Active-high VR enable pin. A group of VRs can be assigned to be enabled at assertion or disabled at deassertion of this pin.
63	CTL5	I	Active-high VR enable pin. A group of VRs can be assigned to be enabled at assertion or disabled at deassertion of this pin.
REFERENCE			
52	AGND	—	Analog ground. Do not connect to the thermal pad ground on top layer. Connect to ground of VREF capacitor.
53	VREF	O	Band-gap reference output. Stabilize it by connecting a 100-nF (typical) ceramic capacitor between this pin and quiet ground.
55	VSYS	I	System voltage detection and input to internal LDOs (3.3 V and 5 V). Bypass to ground with a 1-µF (typical) ceramic capacitor.
THERMAL PAD			
—	Thermal pad (PGND)	—	Connect to PCB ground plane using multiple vias for good thermal and electrical performance.

Copyright © 2022 Texas Instruments Incorporated

7 Specifications

7.1 Absolute Maximum Ratings

over operating free-air temperature range (unless otherwise noted)[1]

	MIN	MAX	UNIT
ANALOG			
Input voltage from battery, VSYS	–0.3	28	V
PVIN3, PVIN4, PVIN5, LDO5P0, DRV5V_1_6, DRV5V_2_A1, DRVL1, DRVL2, DRVL6	–0.3	7	V
V5ANA	–0.3	6	V
PGNDSNS1, PGNDSNS2, PGNDSNS6, AGND, FBGND2	–0.3	0.3	V
DRVH1, DRVH2, DRVH6, BOOT1, BOOT2, BOOT6	–0.3	34	V
SW1, SW2, SW6	–5[2]	28	V
LX3, LX4, LX5	–2[3]	8	V
Differential voltage, BOOTx to SWx	–0.3	5.5	V
VREF, LDO3P3, FBVOUT1, FBVOUT2, FBVOUT6, FB3, FB4, FB5, ILIM1, ILIM2, ILIM6, PVINVTT, VTT, VTTFB, PVINSWA1, SWA1, PVINSWB1_B2, SWB1, SWB2, LDOA1	–0.3	3.6	V
PVINLDOA2_A3, LDOA2, LDOA3	–0.3	3.3	V
DIGITAL IO			
DATA, CLK, GPO1-GPO3	–0.3	3.6	V
CTL1-CTL6, GPO4, IRQB	–0.3	7	V
Storage temperature, T_{stg}	–40	150	°C

(1) Stresses beyond those listed under *Absolute Maximum Ratings* may cause permanent damage to the device. These are stress ratings only, and functional operation of the device at these or any other conditions beyond those indicated under *Recommended Operating Conditions* is not implied. Exposure to absolute-maximum-rated conditions for extended periods may affect device reliability.
(2) Transient for less than 5 ns
(3) Transient for less than 20 ns

7.2 ESD Ratings

			VALUE	UNIT
V_{ESD}	Electrostatic discharge	Human Body Model (HBM), per ANSI/ESDA/JEDEC JS001[1]	±1000	V
		Charged Device Model (CDM), per JESD22-C101[2]	±250	

(1) JEDEC document JEP155 states that 500-V HBM allows safe manufacturing with a standard ESD control process.
(2) JEDEC document JEP157 states that 250-V CDM allows safe manufacturing with a standard ESD control process.

7.3 Recommended Operating Conditions

over operating free-air temperature range (unless otherwise noted)

	MIN	NOM	MAX	UNIT
ANALOG				
VSYS	5.6	13	21	V
VREF	–0.3		1.3	V
PVIN3, PVIN4, PVIN5, LDO5P0, V5ANA, DRV5V_1_6, DRV5V_2_A1	–0.3		5.5	V
PGNDSNS1, PGNDSNS2, PGNDSNS6, AGND, FBGND2	–0.3		0.3	V
DRVH1, DRVH2, DRVH6, BOOT1, BOOT2, BOOT6	–0.3		26.5	v
DRVL1, DRVL2, DRVL6	–0.3		5.5	V
SW1, SW2, SW6	–1		21	V
LX3, LX4, LX5	–1		5.5	V
FBVOUT1, FBVOUT2, FBVOUT6, FB3, FB4, FB5	–0.3		3.6	V
LDO3P3, ILIM1, ILIM2, ILIM6, LDOA1	–0.3		3.3	V
PVINVTT	–0.3	BUCK6	FBVOUT6	V
VTT, VTTFB	–0.3		0.5 × FBVOUT6	V
PVINSWA1, SWA1, PVINSWB1_B2, SWB1, SWB2	–0.3		3.6	V
PVINLDOA2_A3	–0.3		1.8	V
LDOA2, LDOA3	–0.3		1.5	V
DIGITAL IO				
DATA, CLK, CTL1–CTL6, GPO1–GPO4, IRQB	–0.3		3.3	V
CHIP				
Operating ambient temperature, T_A	–40	27	85	°C
Operating junction temperature, T_J	–40	27	125	°C

7.4 Thermal Information

THERMAL METRIC[1]		TPS650864 RSK (VQFN) 64 PINS	UNIT
$R_{\theta JA}$	Junction-to-ambient thermal resistance	25.8	°C/W
$R_{\theta JC(top)}$	Junction-to-case (top) thermal resistance	11.3	°C/W
$R_{\theta JB}$	Junction-to-board thermal resistance	4.4	°C/W
ψ_{JT}	Junction-to-top characterization parameter	0.2	°C/W
ψ_{JB}	Junction-to-board characterization parameter	4.4	°C/W
$R_{\theta JC(bot)}$	Junction-to-case (bottom) thermal resistance	0.7	°C/W

(1) For more information about traditional and new thermal metrics, see *Semiconductor and IC Package Thermal Metrics* application report.

7.5 Electrical Characteristics: Total Current Consumption

over recommended free-air temperature range and over recommended input voltage range (typical values are at T_A = 25°C) (unless otherwise noted)

PARAMETER		TEST CONDITIONS	MIN	TYP	MAX	UNIT
I_{SD}	PMIC shutdown current that includes I_Q for references, LDO5, LDO3P3, and digital core	V_{SYS} = 13 V, all functional output rails are disabled		65		µA

Copyright © 2022 Texas Instruments Incorporated

7.6 Electrical Characteristics: Reference and Monitoring System

over recommended free-air temperature range and over recommended input voltage range (typical values are at T_A = 25°C) (unless otherwise noted)

PARAMETER		TEST CONDITIONS	MIN	TYP	MAX	UNIT
REFERENCE						
V_{REF}	Band-gap reference voltage			1.25		V
	Accuracy		–0.5%		0.5%	
C_{VREF}	Band-gap output capacitor		0.047	0.1	0.22	µF
$V_{SYS_UVLO_5V}$	VSYS UVLO threshold for LDO5	V_{SYS} falling	5.24	5.4	5.56	V
$V_{SYS_UVLO_5V_HYS}$	VSYS UVLO threshold hysteresis for LDO5	V_{SYS} rising above $V_{SYS_UVLO_5V}$		200		mV
$V_{SYS_UVLO_3V}$	VSYS UVLO threshold for LDO3P3	V_{SYS} falling	3.45	3.6	3.75	V
$V_{SYS_UVLO_3V_HYS}$	VSYS UVLO threshold hysteresis for LDO3P3	V_{SYS} rising above $V_{SYS_UVLO_3V}$		150		mV
T_{CRIT}	Critical threshold of die temperature	T_J rising	130	145	160	°C
T_{CRIT_HYS}	Hysteresis of T_{CRIT}	T_J falling		10		°C
T_{HOT}	Hot threshold of die temperature	T_J rising	110	115	120	°C
T_{HOT_HYS}	Hysteresis of T_{HOT}	T_J falling		10		°C
LDO5						
V_{IN}	Input voltage at V_{SYS} pin		5.6	13	21	V
V_{OUT}	DC output voltage	I_{OUT} = 10 mA	4.9	5	5.1	V
I_{OUT}	DC output current			100	180	mA
I_{OCP}	Overcurrent protection	Measured with output shorted to ground	200			mA
V_{TH_PG}	Power Good assertion threshold in percentage of target V_{OUT}	V_{OUT} rising		94%		
$V_{TH_PG_HYS}$	Power Good deassertion hysteresis	V_{OUT} rising or falling		4%		
I_Q	Quiescent current	V_{IN} = 13 V, I_{OUT} = 0 A		20		µA
C_{OUT}	External output capacitance		2.7	4.7	10	µF
V5ANA-to-LDO5P0 LOAD SWITCH						
R_{DSON}	On resistance	V_{IN} = 5 V, measured from V5ANA pin to LDO5P0 pin at I_{OUT} = 200 mA			1	Ω
V_{TH_PG}	Power Good threshold for external 5-V supply	V_{V5ANA} rising		4.7		V
$V_{TH_HYS_PG}$	Power Good threshold hysteresis for external 5-V supply	V_{V5ANA} falling		100		mV
I_{LKG}	Leakage current	Switch disabled, V_{V5ANA} = 5 V, V_{LDO5} = 0 V			10	µA
LDO3P3						
V_{IN}	Input voltage at V_{SYS} pin		5.6	13	21	V
V_{OUT}	DC output voltage	I_{OUT} = 10 mA		3.3		V
	Accuracy	V_{IN} = 13 V, I_{OUT} = 10 mA	–3%		3%	
I_{OUT}	DC output current				40	mA
I_{OCP}	Overcurrent protection	Measured with output shorted to ground	70			mA
V_{TH_PG}	Power Good assertion threshold in percentage of target V_{OUT}	V_{OUT} rising		92%		
$V_{TH_PG_HYS}$	Power Good deassertion hysteresis	V_{OUT} falling		3%		

Copyright © 2022 Texas Instruments Incorporated

7.6 Electrical Characteristics: Reference and Monitoring System (continued)

over recommended free-air temperature range and over recommended input voltage range (typical values are at T_A = 25°C) (unless otherwise noted)

PARAMETER		TEST CONDITIONS	MIN	TYP	MAX	UNIT
I_Q	Quiescent current	V_{IN} = 13 V, I_{OUT} = 0 A		20		µA
C_{OUT}	External output capacitance		2.2	4.7	10	µF

7.7 Electrical Characteristics: Buck Controllers

over recommended input voltage range, T_A = –40°C to +85°C and T_A = 25°C for typical values (unless otherwise noted)

PARAMETER		TEST CONDITIONS	MIN	TYP	MAX	UNIT
BUCK1, BUCK2, BUCK6						
V_{IN}	Power input voltage for external HSD FET		5.6	13	21	V
V_{OUT}	DC output voltage VID range and options	VID step size = 10 mV, BUCKx_VID[6:0] progresses from 0000001 to 1111111	0.41	See Section 5	1.67	V
		VID step size = 25 mV, BUCKx_VID[6:0] progresses from 0000001 to 1111111	1[(1)]	See Section 5	3.575	V
	DC output voltage accuracy	V_{OUT} = 1, 1.2, 1.35, 1.5, 1.8, 2.5, 3.3 V, I_{OUT} = 100 mA to 7 A	–2%		2%	
	Total output voltage accuracy (DC + ripple) in DCM	I_{OUT} = 10 mA, V_{OUT} ≤ 1 V	–30		40	mV
$V_{FB_EXT_BUCK1}$	Feedback regulation voltage	Applies only to the Buck1 Controller if programmed for external feedback voltage adjustability	384	400	416	mV
$I_{FB_LKG_BUCK1}$	Feedback pin leakage current	Applies only to the Buck1 Controller if programmed for external feedback voltage adjustability			65	nA
SR(V_{OUT})	Output DVS slew rate	VID step size = 10 mV	2.5	3.125		mV/µs
		VID step size = 25 mV	3.125	4		
I_{LIM_LSD}	Low-side output valley current limit accuracy (programmed by external resistor R_{LIM})		–15%		15%	
I_{LIMREF}	Source current out of ILIM1 pin	T = 25°C	45	50	55	µA
V_{LIM}	Voltage at ILIM1 pin	$V_{LIM} = R_{LIM} \times I_{LIMREF}$	0.2		2.25	V
$\Delta V_{OUT}/\Delta V_{IN}$	Line regulation	V_{OUT} = 1, 1.2, 1.35, 1.5, 1.8, 2.5, 3.3 V, I_{OUT} = 7 A	–0.5%		0.5%	
$\Delta V_{OUT}/\Delta I_{OUT}$	Load regulation	V_{IN} = 13 V, V_{OUT} = 1, 1.2, 1.35, 1.5, 1.8, 2.5, 3.3 V, I_{OUT} = 0 A to 7 A, referenced to V_{OUT} at $I_{OUT} = I_{OUT_MAX}$	0%		1%	
V_{TH_PG}	Power Good deassertion threshold in percentage of target V_{OUT}	V_{OUT} rising	105.5%	108%	110.5%	
		V_{OUT} falling	89.5%	92%	94.5%	
R_{DSON_DRVH}	Driver DRVH resistance	Source, IDRVH = –50 mA		3		Ω
		Sink, IDRVH = 50 mA		2		Ω
R_{DSON_DRVL}	Driver DRVL resistance	Source, IDRVL = –50 mA		3		Ω
		Sink, IDRVL = 50 mA		0.4		Ω
R_{DIS}	Output auto-discharge resistance	BUCKx_DISCHG[1:0] = 01		100		Ω
		BUCKx_DISCHG[1:0] = 10		200		Ω
		BUCKx_DISCHG[1:0] = 11		500		Ω

Copyright © 2022 Texas Instruments Incorporated

7.7 Electrical Characteristics: Buck Controllers (continued)

over recommended input voltage range, T_A = –40°C to +85°C and T_A = 25°C for typical values (unless otherwise noted)

PARAMETER		TEST CONDITIONS	MIN	TYP	MAX	UNIT
C_{BOOT}	Bootstrap capacitance			100		nF
R_{ON_BOOT}	Bootstrap switch ON resistance				20	Ω

(1) BUCKx_VID[6:0] = 0000001 – 0011000

7.8 Electrical Characteristics: Synchronous Buck Converters

over recommended input voltage range, T_A = –40°C to +85°C and T_A = 25°C for typical values (unless otherwise noted)

PARAMETER		TEST CONDITIONS	MIN	TYP	MAX	UNIT
BUCK3, BUCK4, BUCK5						
V_{IN}	Power input voltage		3.0		5.5	V
V_{OUT}	DC output voltage VID range and options	VID step size = 10 mV, BUCKx_VID[6:0] progresses from 0000001 to 1111111	0.41	See *Section 5*	1.67	V
		VID step size = 25 mV, BUCKx_VID[6:0] progresses from 0000001 to 1111111	0.425	See *Section 5*	3.575	
	DC output voltage accuracy	V_{IN} = 5.0 V, V_{OUT} = 1, 1.2, 1.35, 1.5, 1.8, 2.5, 3.3 V, I_{OUT} = 1.5 A	–2%		2%	
		V_{IN} = 3.3 V, V_{OUT} = 1, 1.2, 1.35, 1.5, 1.8 V, I_{OUT} = 1.5 A	–2%		2%	
		V_{IN} = 5.0 V, V_{OUT} = 1, 1.2, 1.35, 1.5, 1.8 V, 2.5, 3.3 V, I_{OUT} = 100 mA	–2.5%		2.5%	
		V_{IN} = 3.3 V, V_{OUT} = 1, 1.2, 1.35, 1.5, 1.8 V, I_{OUT} = 100 mA	–2.5%		2.5%	
V_{DCM}	Total output voltage accuracy (DC + ripple) in DCM	V_{IN} = 5.0 V, I_{OUT} = 10 mA, V_{OUT} ≤ 1 V	–30		40	mV
$SR(V_{OUT})$	Output DVS slew rate	VID step size = 10 mV	2.5	3.125		mV/µs
		VID step size = 25 mV	3.125	4		
I_{OUT}	Continuous DC output current				3	A
I_{IND_LIM}	HSD FET current limit		4.3		7	A
I_Q	Quiescent current	V_{IN} = 5 V, V_{OUT} = 1 V, BUCKx_MODE = 0b		35		µA
$\Delta V_{OUT}/\Delta V_{IN}$	Line regulation	V_{OUT} = 1, 1.2, 1.35, 1.5, 1.8, 2.5, 3.3 V, I_{OUT} = 1.5 A	–0.5%		0.5%	
$\Delta V_{OUT}/\Delta I_{OUT}$	Load regulation	V_{IN} = 5 V, V_{OUT} = 1, 1.2, 1.35, 1.5, 1.8, 2.5, 3.3 V, I_{OUT} = 0 A to 3 A, referenced to V_{OUT} at I_{OUT} = 1.5 A	–0.2%		2%	
V_{TH_PG}	Power Good deassertion threshold in percentage of target V_{OUT}	V_{OUT} rising		108%		
		V_{OUT} falling		92%		
$V_{TH_HYS_PG}$	Power Good reassertion hysteresis entering back into V_{TH_PG}	V_{OUT} rising or falling		3%		
R_{DIS}	Output auto-discharge resistance	BUCKx_DISCHG[1:0] = 01		100		Ω
		BUCKx_DISCHG[1:0] = 10		200		
		BUCKx_DISCHG[1:0] = 11		500		

7.9 Electrical Characteristics: LDOs

over recommended input voltage range, T_A = –40°C to +85°C and T_A = 25°C for typical values (unless otherwise noted)

PARAMETER		TEST CONDITIONS	MIN	TYP	MAX	UNIT
LDOA1						
V_{IN}	Input voltage		4.5	5	5.5	V
V_{OUT}	DC output voltage	Set by LDOA1_VID[3:0]	1.35	See Section 5	3.3	V
	Accuracy	I_{OUT} = 0 to 200 mA	–2%		2%	V
I_{OUT}	DC output current				200	mA
$\Delta V_{OUT}/\Delta V_{IN}$	Line regulation	I_{OUT} = 40 mA	–0.5%		0.5%	
$\Delta V_{OUT}/\Delta I_{OUT}$	Load regulation	I_{OUT} = 10 mA to 200 mA	–2%		2%	
I_{OCP}	Overcurrent protection	V_{IN} = 5 V, Measured with output shorted to ground	500			mA
V_{TH_PG}	Power Good deassertion threshold in percentage of target V_{OUT}	V_{OUT} rising		108%		
		V_{OUT} falling		92%		
$t_{STARTUP}$	Start-up time	Measured from EN = H to reach 95% of final value, C_{OUT} = 4.7 µF			500	µs
I_Q	Quiescent current	I_{OUT} = 0 A		23		µA
C_{OUT}	External output capacitance		2.7	4.7	10	µF
	ESR				100	mΩ
R_{DIS}	Output auto-discharge resistance	LDOA1_DISCHG[1:0] = 01		100		Ω
		LDOA1_DISCHG[1:0] = 10		190		Ω
		LDOA1_DISCHG[1:0] = 11		450		Ω
LDOA2 and LDOA3						
V_{IN}	Power input voltage		V_{OUT} + V_{DROP} (1)	1.8	1.98	V
V_{OUT}	LDOA2 DC output voltage	Set by LDOA2_VID[3:0]	0.7	See Section 5	1.5	V
	LDOA3 DC output voltage	Set by LDOA3_VID[3:0]	0.7	See Section 5	1.5	V
	DC output voltage accuracy	I_{OUT} = 0 to 600 mA	–2%		3%	
I_{OUT}	DC output current				600	mA
V_{DROP}	Dropout voltage	V_{OUT} = 0.99 × V_{OUT_NOM}, I_{OUT} = 600 mA			350	mV
$\Delta V_{OUT}/\Delta V_{IN}$	Line regulation	I_{OUT} = 300 mA	–0.5%		0.5%	
$\Delta V_{OUT}/\Delta I_{OUT}$	Load regulation	I_{OUT} = 10 mA to 600 mA	–2%		2%	
I_{OCP}	Overcurrent protection	Measured with output shorted to ground	0.65	1.25		A
V_{TH_PG}	Power Good assertion threshold in percentage of target V_{OUT}	V_{OUT} rising		108%		
		V_{OUT} falling		92%		
$t_{STARTUP}$	Start-up time	Measured from EN = H to reach 95% of final value, C_{OUT} = 4.7 µF			500	µs
I_Q	Quiescent current	I_{OUT} = 0 A		20		µA
PSRR	Power supply rejection ratio	f = 1 kHz, V_{IN} = 1.8 V, V_{OUT} = 1.2 V, I_{OUT} = 300 mA, C_{OUT} = 2.2 µF – 4.7 µF		48		dB
		f = 10 kHz, V_{IN} = 1.8 V, V_{OUT} = 1.2 V, I_{OUT} = 300 mA, C_{OUT} = 2.2 µF – 4.7 µF		30		dB

Copyright © 2022 Texas Instruments Incorporated

7.9 Electrical Characteristics: LDOs (continued)

over recommended input voltage range, T_A = –40°C to +85°C and T_A = 25°C for typical values (unless otherwise noted)

PARAMETER		TEST CONDITIONS	MIN	TYP	MAX	UNIT
C_{OUT}	External output capacitance		2.2	4.7	10	µF
	ESR				100	mΩ
R_{DIS}	Output auto-discharge resistance	LDOA[2,3]_DISCHG[1:0] = 01		80		Ω
		LDOA[2,3]_DISCHG[1:0] = 10		180		
		LDOA[2,3]_DISCHG[1:0] = 11		475		
VTT LDO						
V_{IN}	Power input voltage			1.2	3.3	V
V_{OUT}	DC output voltage	V_{IN} = 1.2 V, Measured at VTTFB pin		V_{IN} / 2		V
	DC output voltage accuracy	Relative to V_{IN} / 2, I_{OUT} ≤ 10 mA, 1.1 V ≤ V_{IN} ≤ 1.35 V	–10		10	mV
		Relative to V_{IN} / 2, I_{OUT} ≤ 500 mA, 1.1 V ≤ V_{IN} ≤ 1.35 V	–25		25	
I_{OUT}	DC Output Current (Rms Value Over Operation)	1.1 V ≤ V_{IN} ≤ 1.5 V	–500	0	500	mA
	Pulsed Current (Duty Cycle Limited to Remain Below DC Rms Specification)	source(+) and sink(–): I_{OCP} = 0.95 A, 1.1 V ≤ V_{IN} ≤ 1.5 V	–500		500	mA
		source(+) and sink(–): I_{OCP} = 1.8 A, 1.1 V ≤ V_{IN} ≤ 1.5 V	–1800		1800	
$\Delta V_{OUT}/\Delta I_{OUT}$	Load regulation	Relative to V_{IN} / 2, I_{OUT} ≤ 10 mA, 1.1 V ≤ V_{IN} ≤ 1.5 V	–10		10	mV
		Relative to V_{IN} / 2, I_{OUT} ≤ 500 mA, 1.1 V ≤ V_{IN} ≤ 1.5 V	–20		20	
		Relative to V_{IN} / 2, I_{OUT} ≤ 1200 mA, 1.1 V ≤ V_{IN} ≤ 1.5 V	–30		30	
		Relative to V_{IN} / 2, I_{OUT} ≤ 1800 mA, 1.1 V ≤ V_{IN} ≤ 1.5 V	–40		40	
ΔV_{OUT_TR}	Load transient regulation	DC + AC at sense point, 1.1 V ≤ V_{IN} ≤ 1.5 V, (I_{OUT} = 0 to 350 mA and 350 mA to 0) AND (0 to –350 mA and –350 mA to 0) with 1 µs of rise and fall time C_{OUT} = 40 µF	–5%		5%	
I_{OCP}	Overcurrent protection	Measured with output shorted to ground: OTPs with VTT I_{LIM} = 0.95 A	0.95			A
		Measured with output shorted to ground: OTPs with VTT I_{LIM} = 1.8 A	1.8			
V_{TH_PG}	Power Good deassertion threshold in percentage of target V_{OUT}	V_{OUT} rising		110%		
		V_{OUT} falling		95%		
$V_{TH_HYS_PG}$	Power Good reassertion hysteresis entering back into V_{TH_PG}			5%		
I_Q	Total ground current	V_{IN} = 1.2 V, I_{OUT} = 0 A			240	µA
I_{LKG}	OFF leakage current	V_{IN} = 1.2 V, disabled			1	µA
C_{IN}	External input capacitance		10			µF
C_{OUT}	External output capacitance		35			µF
R_{DIS}	Output auto-discharge resistance	VTT_DISCHG = 0	1000			kΩ
		VTT_DISCHG = 1	60	80	100	Ω

(1) The minimum value must be equal to or greater than 1.62 V.

7.10 Electrical Characteristics: Load Switches

over operating free-air temperature range (unless otherwise noted)

PARAMETER		TEST CONDITIONS	MIN	TYP	MAX	UNIT
SWA1						
V_{IN}	Input voltage range		0.5		3.3	V
I_{OUT}	DC output current				300	mA
R_{DSON}	ON resistance	V_{IN} = 1.8 V, measured from PVINSWA1 pin to SWA1 pin at I_{OUT} = $I_{OUT(MAX)}$		60	93	mΩ
		V_{IN} = 3.3 V, measured from PVINSWA1 pin to SWA1 pin at I_{OUT} = $I_{OUT(MAX)}$		100	165	
V_{TH_PG}	Power Good deassertion threshold in percentage of target V_{OUT}	V_{OUT} rising		108%		
		V_{OUT} falling		92%		
$V_{TH_HYS_PG}$	Power Good reassertion hysteresis entering back into V_{TH_PG}	V_{OUT} rising or falling		2%		
I_{INRUSH}	Inrush current upon turnon	V_{IN} = 3.3 V, C_{OUT} = 0.1 µF			10	mA
I_Q	Quiescent current	V_{IN} = 3.3 V, I_{OUT} = 0 A		10.5		µA
		V_{IN} = 1.8 V, I_{OUT} = 0 A		9		
I_{LKG}	Leakage current	Switch disabled, V_{IN} = 1.8 V		7	370	nA
		Switch disabled, V_{IN} = 3.3 V		10	900	
C_{OUT}	External output capacitance			0.1		µF
R_{DIS}	Output auto-discharge resistance	SWA1_DISCHG[1:0] = 01		100		Ω
		SWA1_DISCHG[1:0] = 10		200		
		SWA1_DISCHG[1:0] = 11		500		
SWB1, SWB2, SWB1_2						
V_{IN}	Input voltage range		0.5		3.3	V
I_{OUT}	DC current per output				400	mA
R_{DSON}	ON resistance per output	V_{IN} = 1.8 V, measured from PVINSWB1_B2 pin to SWBx pin at I_{OUT} = $I_{OUT(MAX)}$, per output switch		68	92	mΩ
		V_{IN} = 3.3 V, measured from PVINSWB1_B2 pin to SWBx pin at I_{OUT} = $I_{OUT(MAX)}$, per output switch		75	125	mΩ
V_{TH_PG}	Power Good deassertion threshold in percentage of target V_{OUT}	V_{OUT} rising		108%		
		V_{OUT} falling		92%		
$V_{TH_HYS_PG}$	Power Good reassertion hysteresis entering back into V_{TH_PG}	V_{OUT} rising or falling		2%		
I_{INRUSH}	Inrush current upon turning on	V_{IN} = 3.3 V, C_{OUT} = 0.1 µF			10	mA
I_Q	Quiescent current	V_{IN} = 3.3 V, I_{OUT} = 0 A		10.5		µA
		V_{IN} = 1.8 V, I_{OUT} = 0 A		9		
I_{LKG}	Leakage current	Switch disabled, V_{IN} = 1.8 V		7	460	nA
		Switch disabled, V_{IN} = 3.3 V		10	1150	
C_{OUT}	External output capacitance			0.1		µF
R_{DIS}	Output auto-discharge resistance	SWBx_DISCHG[1:0] = 01		100		Ω
		SWBx_DISCHG[1:0] = 10		200		
		SWBx_DISCHG[1:0] = 11		500		

Copyright © 2022 Texas Instruments Incorporated

7.11 Digital Signals: I²C Interface

over recommended free-air temperature range and over recommended input voltage range (typical values are at T_A = 25°C) (unless otherwise noted)

PARAMETER		TEST CONDITIONS	MIN	TYP	MAX	UNIT
V_{OL}	Low-level output voltage	V_{PULL_UP} = 1.8 V			0.4	V
V_{IH}	High-level input voltage		1.2			V
V_{IL}	Low-level input voltage				0.4	V
I_{LKG}	Leakage current	V_{PULL_UP} = 1.8 V		0.01	0.3	µA
$R_{PULL-UP}$	Pullup resistance	Standard mode			8.5	kΩ
		Fast mode			2.5	
		Fast mode plus			1	
C_{OUT}	Total load capacitance per pin				50	pF

7.12 Digital Input Signals (CTLx)

over recommended free-air temperature range and over recommended input voltage range (typical values are at T_A = 25°C) (unless otherwise noted)

PARAMETER		TEST CONDITIONS	MIN	TYP	MAX	UNIT
V_{IH}	High-level input voltage		0.85			V
V_{IL}	Low-level input voltage				0.4	V

7.13 Digital Output Signals (IRQB, GPOx)

Over recommended free-air temperature range and over recommended input voltage range (typical values are at T_A = 25°C) (unless otherwise noted)

PARAMETER		TEST CONDITIONS	MIN	TYP	MAX	UNIT
V_{OL}	Low-level output voltage	I_{OL} < 2 mA			0.4	V
I_{LKG}	Leakage current	V_{PULL_UP} = 1.8 V			0.35	µA

7.14 Timing Requirements

over recommended free-air temperature range and over recommended input voltage range (typical values are at T_A = 25°C) (unless otherwise noted)

		MIN	NOM	MAX	UNIT
I²C INTERFACE					
f_{CLK}	Clock frequency (standard mode)			100	kHz
	Clock frequency (fast mode)			400	kHz
	Clock frequency (fast mode plus)			1000	kHz
t_r	Rise time (standard mode)			1000	ns
	Rise time (fast mode)			300	ns
	Rise time (fast mode plus)			120	ns
t_f	Rise time (standard mode)			300	ns
	Rise time (fast mode)			300	ns
	Rise time (fast mode plus)			120	ns

7.15 Switching Characteristics

over operating free-air temperature range and over recommended input voltage range (typical values are at T_A = 25°C) (unless otherwise noted)

PARAMETER	TEST CONDITIONS	MIN	TYP	MAX	UNIT
BUCK CONTROLLERS					

7.15 Switching Characteristics (continued)

over operating free-air temperature range and over recommended input voltage range (typical values are at T_A = 25°C) (unless otherwise noted)

PARAMETER		TEST CONDITIONS	MIN	TYP	MAX	UNIT
t_{PG}	Total turnon time	Measured from enable going high to when output reaches 90% of target value.		550	850	µs
$T_{ON,MIN}$	Minimum on-time of DRVH			50		ns
T_{DEAD}	Driver dead-time	DRVH off to DRVL on		15		ns
		DRVL off to DRVH on		30		ns
f_{SW}	Switching frequency	Continuous-conduction mode, V_{IN} = 13 V, V_{OUT} ≥ 1 V		1000		kHz
BUCK CONVERTERS						
t_{PG}	Total turnon time	Measured from enable going high to when output reaches 90% of target value.		250	1000	µs
f_{SW}	Switching frequency	Continuous-conduction mode		See Figure 7-10		MHz
LDOAx						
$t_{STARTUP}$	Start-up time	Measured from enable going high to when output reaches 95% of final value, V_{OUT} = 1.2 V, C_{OUT} = 4.7 µF		180		µs
VTT LDO						
$t_{STARTUP}$	Start-up time	Measured from enable going high to PG assertion, V_{OUT} = 0.675 V, C_{OUT} = 40 µF		22		µs
SWA1						
$t_{TURN-ON}$	Turnon time	Measured from enable going high to reach 95% of final value, V_{IN} = 3.3 V, C_{OUT} = 0.1 µF		0.85		ms
		Measured from enable going high to reach 95% of final value, V_{IN} = 1.8 V, C_{OUT} = 0.1 µF		0.63		ms
SWB1_2						
$t_{TURN-ON}$	Turnon time	Measured from enable going high to reach 95% of final value, V_{IN} = 3.3 V, C_{OUT} = 0.1 µF		1.1		ms
		Measured from enable going high to reach 95% of final value, V_{IN} = 1.8 V, C_{OUT} = 0.1 µF		0.82		ms

Copyright © 2022 Texas Instruments Incorporated

7.16 Typical Characteristics

Measurements are taken at 25°C.

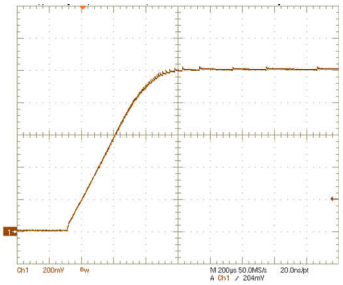

FET = CSD87588N L = PIMB061H-R22ms
BUCK2_MODE = 0b C_{OUT} = 2 × 150 µF + 1 × 22 µF

Figure 7-1. Example BUCK2 Controller Start-Up

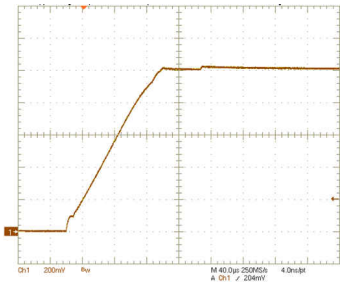

BUCK3_MODE = 0b L = PIFE32251B-R47ms
C_{OUT} = 4 × 22 µF

Figure 7-2. Example BUCK3 Converter Start-Up

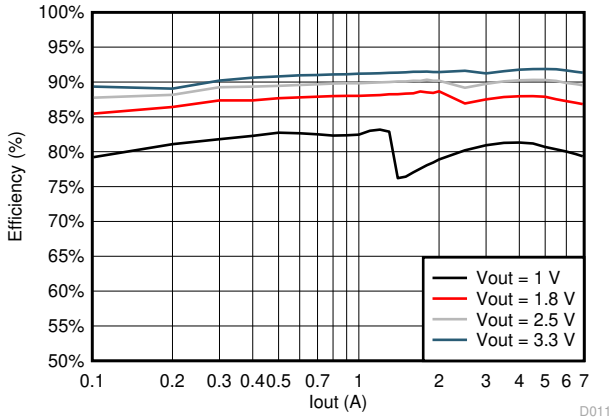

FET = CSD87381P L = PIMB061H-R47ms
BUCK1_MODE = 0b

Figure 7-3. Example BUCK1 Efficiency at V_{IN} = 13 V

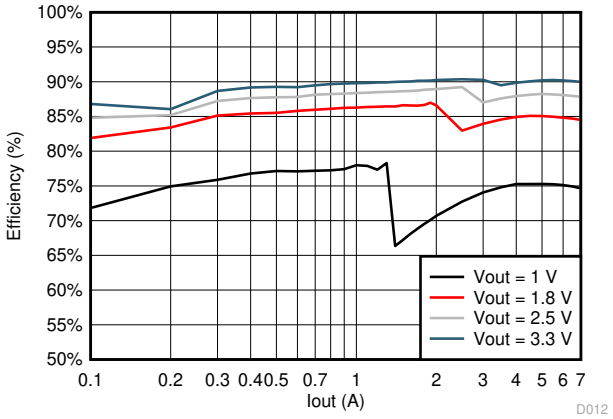

FET = CSD87381P L = PIMB061H-R47ms
BUCK1_MODE = 0b

Figure 7-4. Example BUCK1 Efficiency at V_{IN} = 18 V

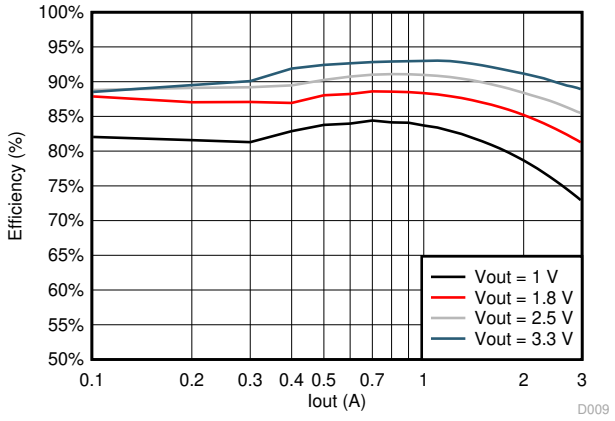

BUCK3_MODE = 0b L = PIFE32251B-R47ms

Figure 7-5. Example BUCK3 Efficiency at V_{IN} = 5 V

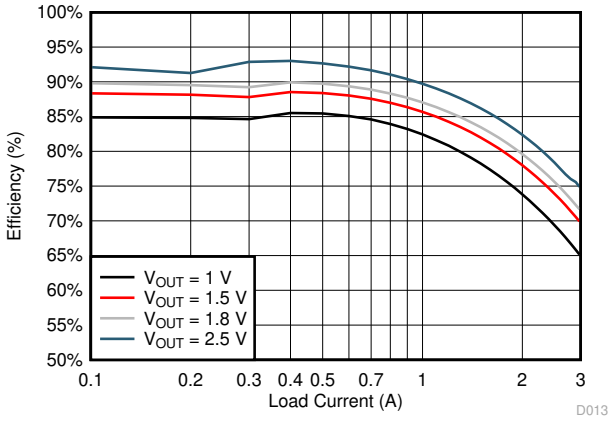

BUCK3_MODE = 0b L = PIFE32251B-R47ms

Figure 7-6. Example BUCK3 Efficiency at V_{IN} = 3.3 V

7.16 Typical Characteristics (continued)

Measurements are taken at 25°C.

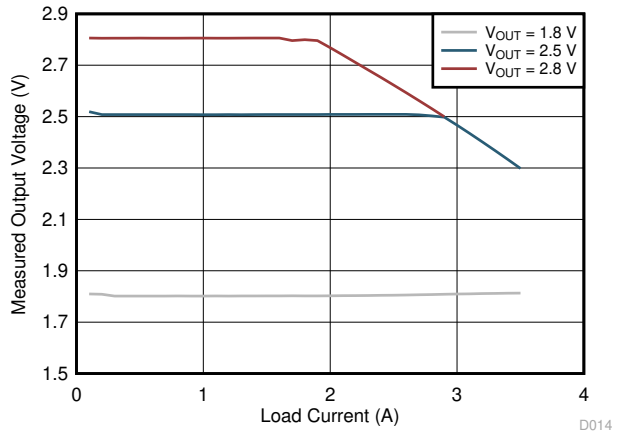

L = PIFE32251B-R47ms

Figure 7-7. Converter Load Current Limitations with V_{IN} = 3.3 V

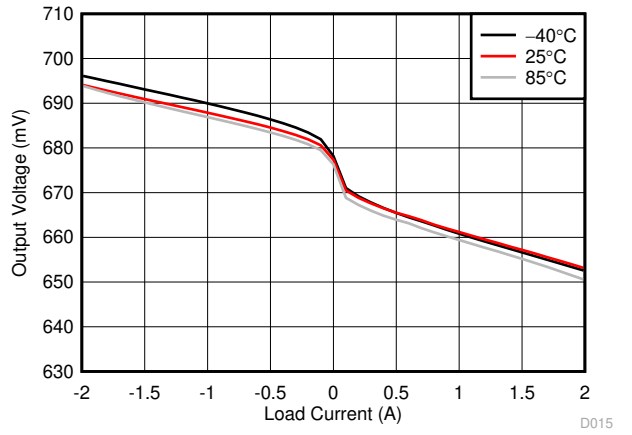

FBVOUT6 = PVINVTT = 1.35 V

Figure 7-8. VTT LDO Regulation

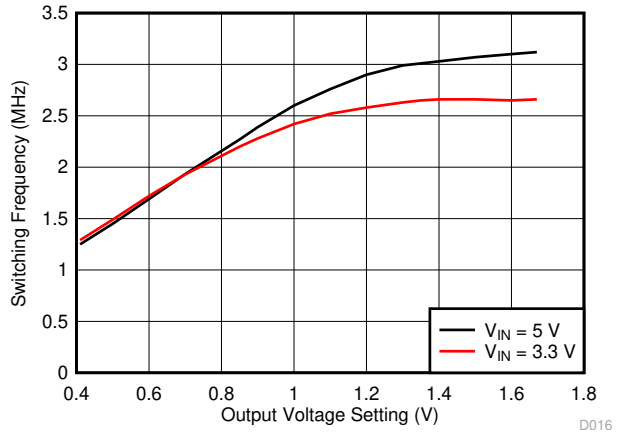

L = PIFE32251B-R47ms

Figure 7-9. Converter Switching Frequency (10-mV Step Size)

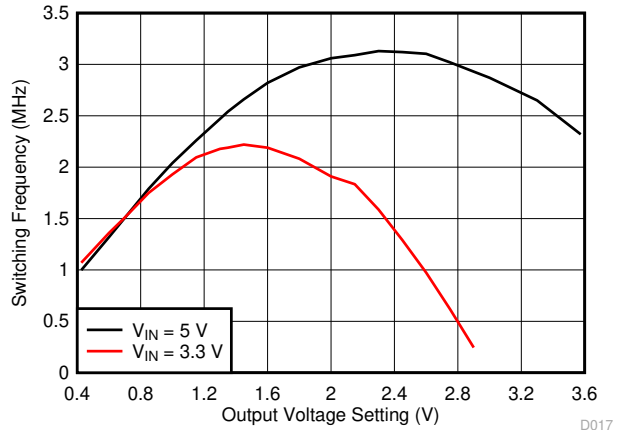

L = PIFE32251B-R47ms

Figure 7-10. Converter Switching Frequency (25-mV Step Size)

Copyright © 2022 Texas Instruments Incorporated

8 Detailed Description

8.1 Overview

The TPS650864 power-management integrated circuit (PMIC) provides a highly flexible and configurable power solution that can power a wide array of processors along with DDR3/DDR4 memory and other peripherals. Integrated in the PMIC are three step-down controllers (BUCK1, BUCK2, and BUCK6), three step-down converters (BUCK3, BUCK4, and BUCK5), a sink or source LDO (VTT LDO), three low-voltage V_{IN} LDOs (LDOA1–LDOA3), and three load switches (SWA1, SWB1, and SWB2). With on-chip one-time programmable (OTP) memory, configuration of each rail for default output value, power-up sequence, fault handling, and Power Good mapping into a GPO pin are all conveniently flexible. All VRs have a built-in discharge resistor, and the value can be changed using the DISCHCNT1–DISCHCNT3 and LDOA1_SWB2_CTRL registers. When enabling a VR, the PMIC automatically disconnects the discharge resistor for that rail without any I^2C command. Table 8-1 lists the key characteristics of the voltage rails.

Table 8-1. Summary of Voltage Regulators

RAIL	TYPE	INPUT VOLTAGE (V)		OUTPUT VOLTAGE RANGE (V)			CURRENT (mA)
		MIN	MAX	MIN	TYP	MAX	
BUCK1	Step-down controller	4.5	21	0.41	See *Section 5*	3.575	scalable
BUCK2	Step-down controller	4.5	21	0.41	See *Section 5*	3.575	scalable
BUCK3	Step-down converter	3	5.5	0.41	See *Section 5*	3.575	3000
BUCK4	Step-down Converter	3	5.5	0.41	See *Section 5*	3.575	3000
BUCK5	Step-down converter	3	5.5	0.41	See *Section 5*	3.575	3000
BUCK6	Step-down controller	4.5	21	0.41	See *Section 5*	3.575	scalable
LDOA1	LDO	4.5	5.5	1.35	See *Section 5*	3.3	200[(1)]
LDOA2	LDO	1.62	1.98	0.7	See *Section 5*	1.5	600
LDOA3	LDO	1.62	1.98	0.7	See *Section 5*	1.5	600
SWA1	Load switch	0.5	3.3				300
SWB1/SWB2	Load switch	0.5	3.3				400
VTT	Sink and source LDO	1.1	1.8		FBVOUT6 / 2		See *Section 5*

(1) When powered from a 5-V supply through the DRV5V_2_A1 pin. Otherwise, max current is limited by max I_{OUT} of LDO5.

8.2 Functional Block Diagram

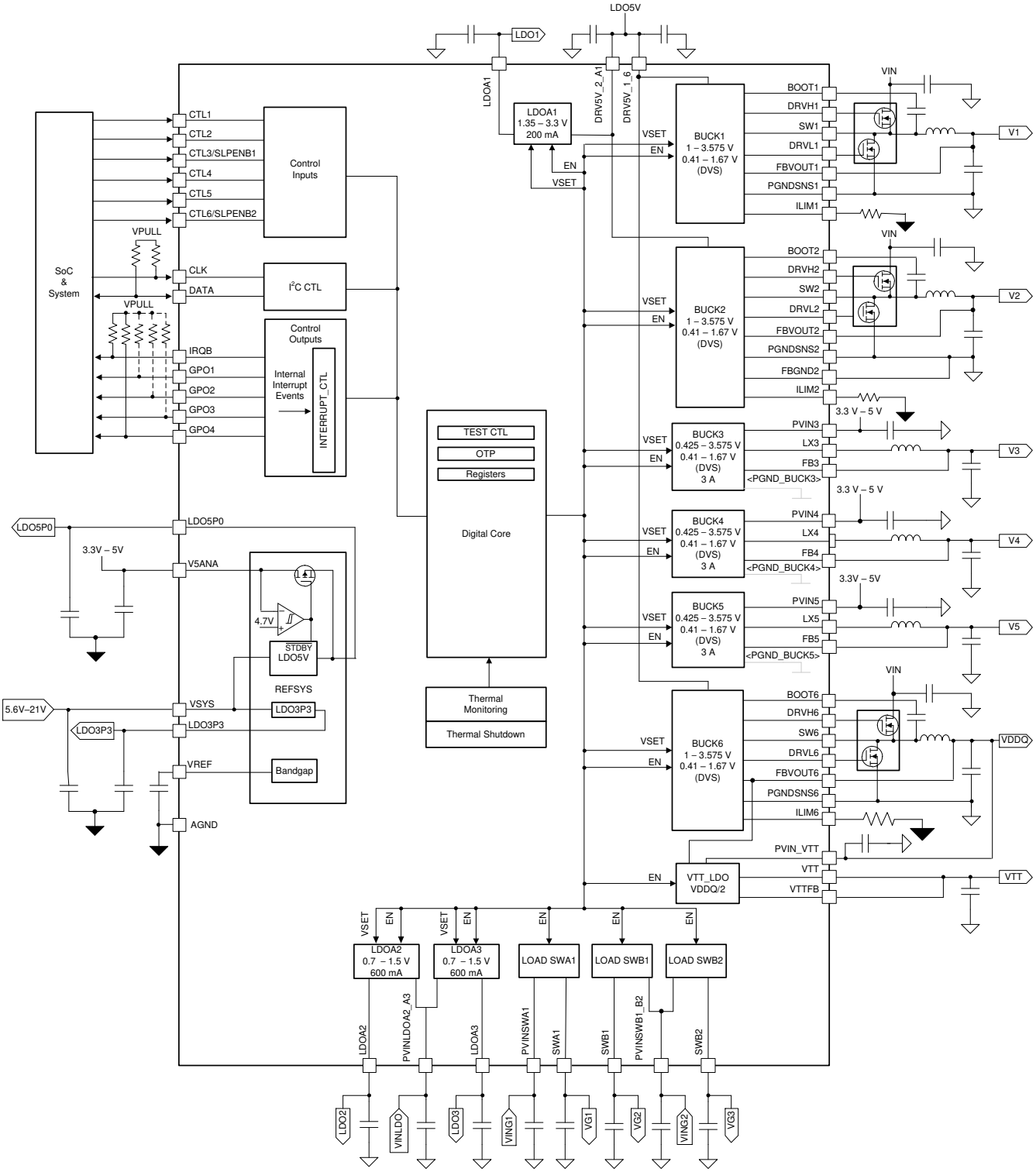

Figure 8-1. PMIC Functional Block Diagram

Copyright © 2022 Texas Instruments Incorporated

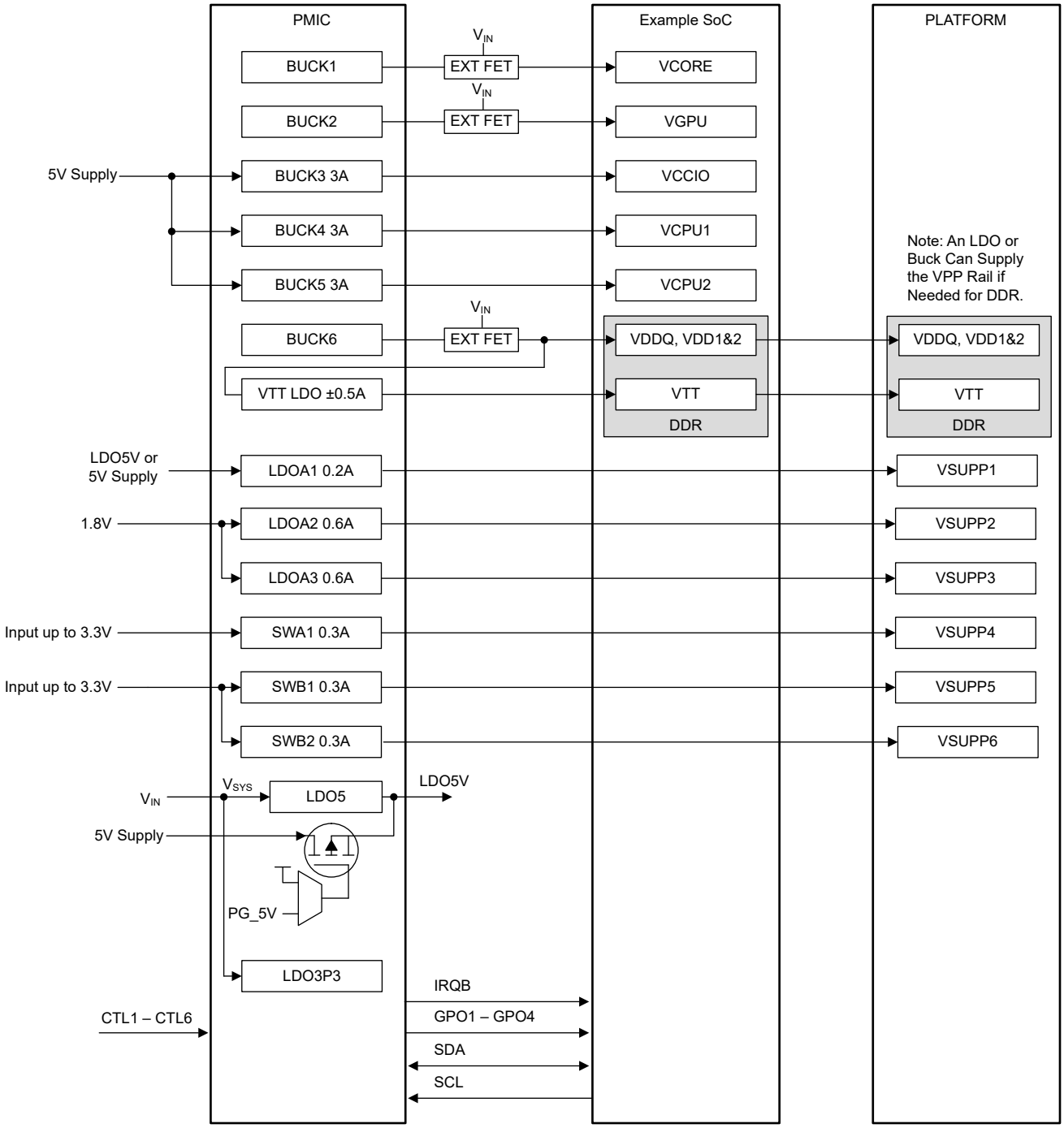

Copyright © 2017, Texas Instruments Incorporated

Figure 8-2. Power Map Example

8.3 TPS6508640 Design and Settings

The TPS6508640 device is optimized to power the higher range of the Xilinx Zynq Ultrascale+ MPSoC, but is compatible with the lower range as well. See Figure 8-3 for an example block diagram. Dashed lines show the option to short VCCINT with VCCBRAM for cases where their voltages are the same and current < 25 A. In this case, the TPS544C25 device is not needed and GPO1 should be shorted to CTL4.

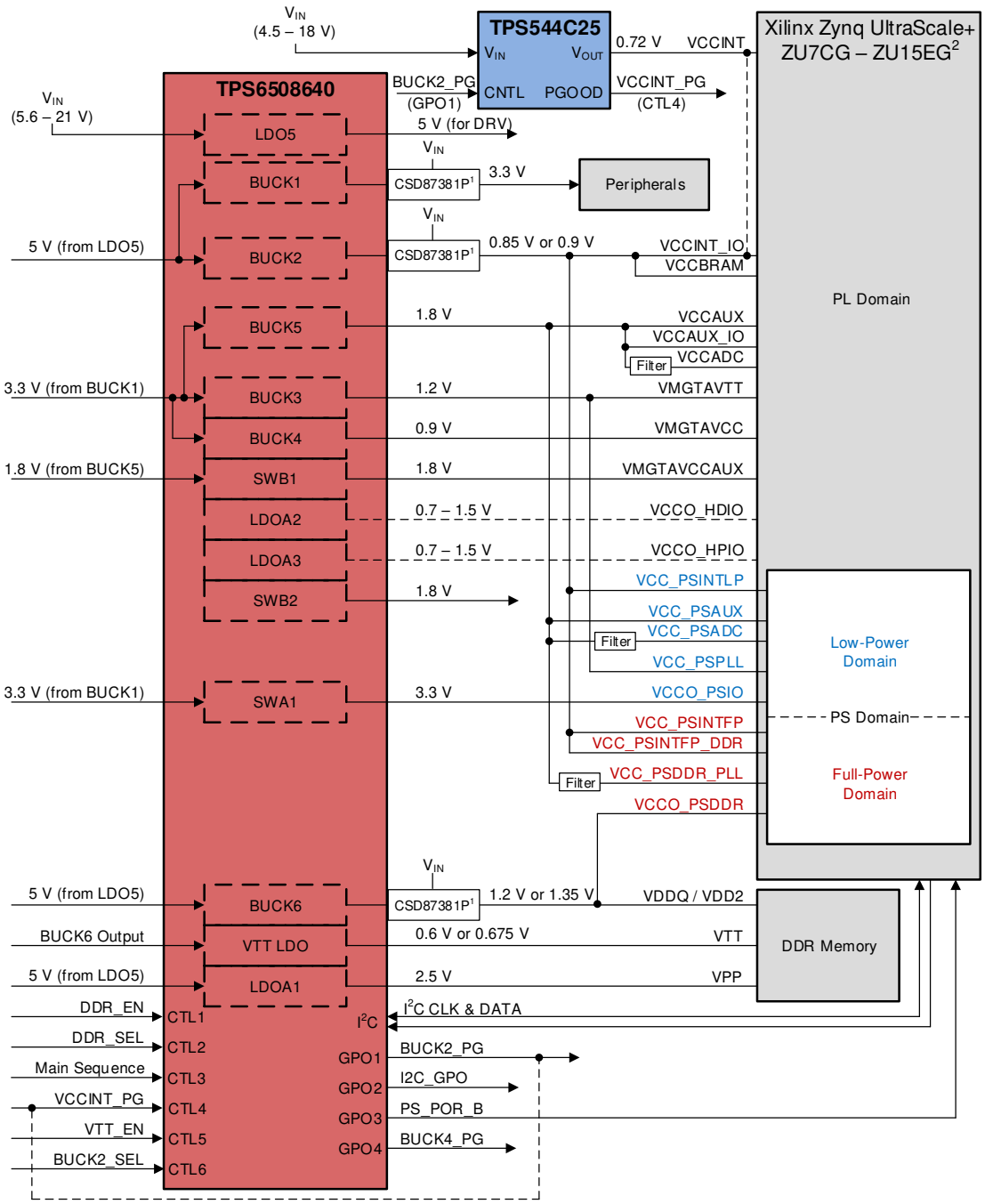

(1) External FETs can be scaled to meet the current requirements of each design; CSD87381P is suitable up to approximately 15 A.
(2) The TPS6508640 is not limited to the ZU7CG - ZU15EG. It can support other Ultrascale+ devices as long as the use case does not exceed the maximum specifications of the TPS6508640.

Figure 8-3. TPS6508640 Power Map Example

Copyright © 2022 Texas Instruments Incorporated

The power up and power down sequences can be seen in Figure 8-4 and Figure 8-5. Regulators and GPOs are enabled by combination of CTL pins and regulator power good signals.

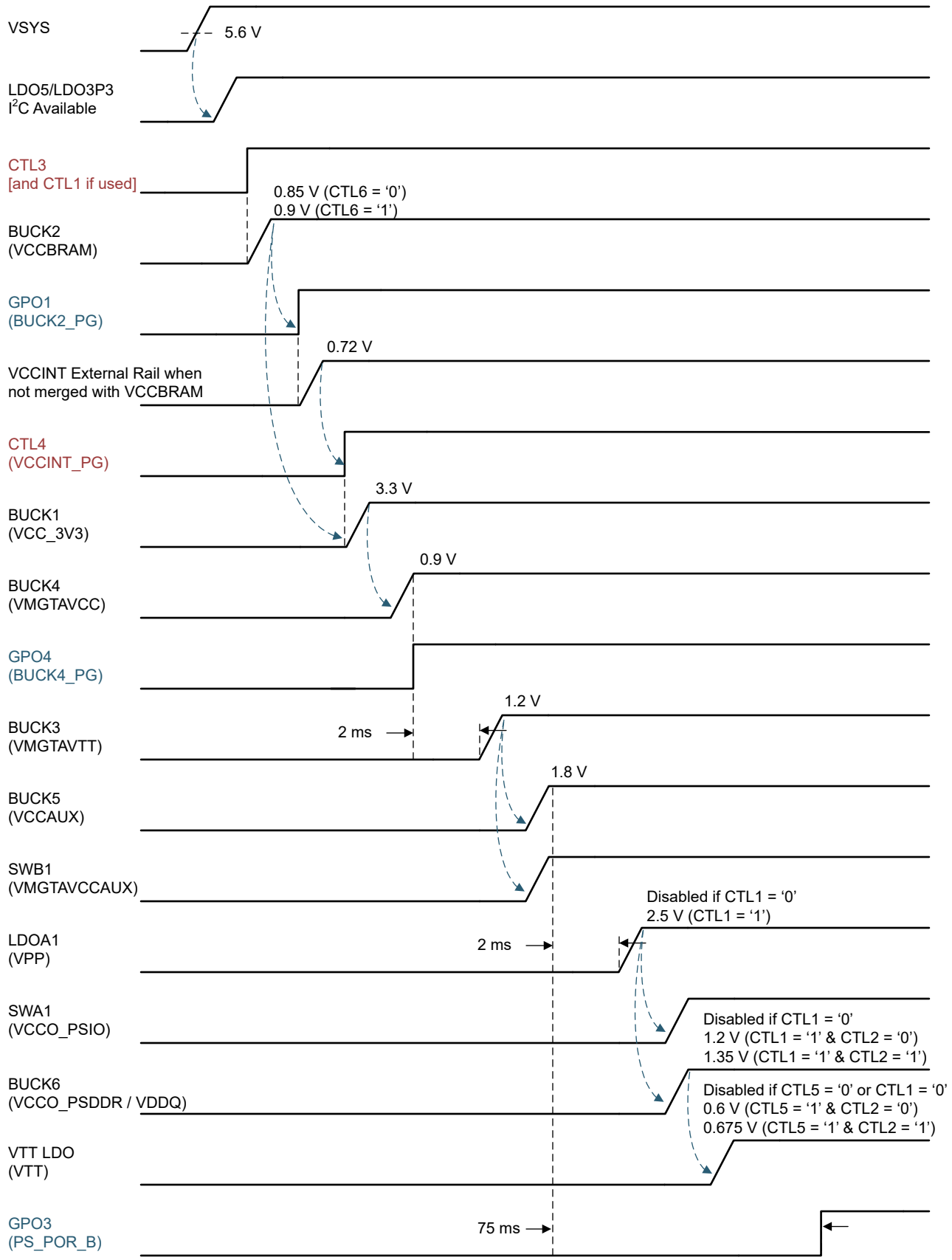

Figure 8-4. TPS6508640 Power-Up Sequence

Copyright © 2022 Texas Instruments Incorporated

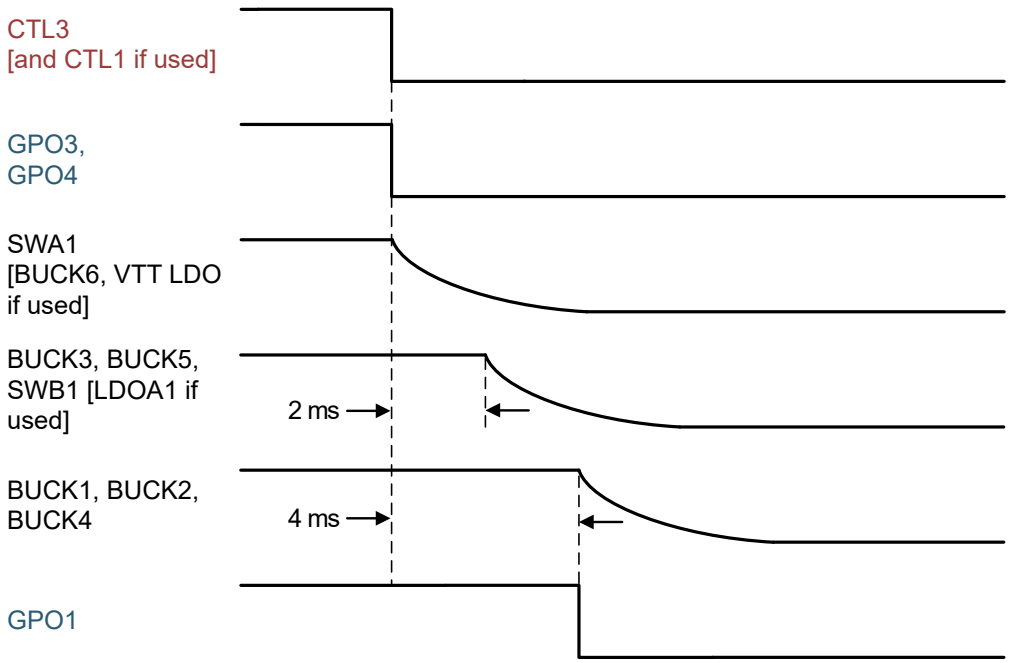

Figure 8-5. TPS6508640 Power-Down Sequence

TPS6508640 sequence includes an optional slot for an external rail to power VCCINT. When using an external rail, GPO1 should be connected to the enable of the external rail and the power good of the external rail should be connected to CTL4. When merging VCCINT and VCCBRAM, GPO1 can be connected directly to CTL4.

CTL1 and CTL5 are used to enable the portion of the sequencing related to DDR memory. This includes BUCK6, LDOA1, and VTT LDO. Connecting the CTL1 pin to the same input as CTL3 will result in BUCK6 being enabled 2 ms after BUCK5 and LDOA1 being enabled after BUCK6 PG. If CTL5 is connected to the same input as well, VTT LDO will turn on after BUCK6 PG as well.

CTL2 is used to select DDR voltage between 1.2 V (logic level low) and 1.35 V (logic level high).

CTL6 is used to select BUCK2 (VCCBRAM) voltage between 0.85 V (logic level low) and 0.9 V (logic level high). BUCK3 also has SLP_EN = 1b by default, so if using 0.85 V for VCCBRAM (CTL6 logic level low), then to modify BUCK3 VID during operation, BUCK3_SLP_VID register bits should be used.

LDOA2 and LDOA3 are controlled only by I^2C.

A summary of the part number specific settings can be seen in Section 8.3.1.

8.3.1 TPS6508640 OTP Summary

The following tables list the TPS6508640 device settings for the buck regulators, general purpose LDOs, VTT LDO, load switches, and GPOs. LDOA1 is used in sequence so all registers with SWB2_LDOA1 will function as LDOA1. Additionally, SWB1 and SWB2 are not merged so all registers with LDOA1_SWB2 will function as SWB2. All values which can be modified by I^2C after power on are shown in italics. Additional details (such as GPO power good inputs) can be found in the register map.

Table 8-2. TPS6508640 Settings Summary—Buck Regulators

REGULATOR	DEFAULT VOLTAGE	SLEEP VOLTAGE	STEP SIZE	SLP PIN	SLP_EN	POWER FAULT MASKED	FORCE PWM
BUCK1	*3.3 V*	*3.3 V*	25 mV	CTL6	*No*	*No*	*Yes*
BUCK2	*0.9 V*	*0.85 V*	10 mV	CTL6	*Yes*	*No*	*Yes*
BUCK3	*1.2 V*	*1.2 V*	25 mV	CTL6	*Yes*	*No*	*Yes*
BUCK4	*0.9 V*	*0.9 V*	25 mV	CTL6	*No*	*No*	*Yes*
BUCK5	*1.8 V*	*1.8 V*	25 mV	CTL6	*No*	*No*	*Yes*
BUCK6	*1.35 V* / 1.2 V	*1.35*	10 mV	CTL2 & CTL6	*No*	*No*	*Yes*

Table 8-3. TPS6508640 Settings Summary—General Purpose LDOs

REGULATOR	DEFAULT VOLTAGE	SLEEP VOLTAGE	ALWAYS ON	SLP PIN	SLP_EN	POWER FAULT MASKED
LDOA1	*2.5 V*	—	No	—	—	*No*
LDOA2	*1.5 V*	*1.5 V*	No	CTL6	*No*	*Yes*
LDOA3	*1.2 V*	*1.2 V*	No	CTL6	*No*	*Yes*

Table 8-4. TPS6508640 Settings Summary—VTT LDO

REGULATOR	ILIM SETTING	ENABLE PIN	POWER FAULT MASKED
VTT LDO	1.8 A	CTL3	*No*

Table 8-5. TPS6508640 Settings Summary—Load Switches

REGULATOR	POWER GOOD VOLTAGE	SWB1_2 MERGED	POWER FAULT MASKED
SWA1	3.3 V	—	*Yes*
SWB1	1.8 V	No	*Yes*
SWB2	1.8 V	No	*Yes*

Table 8-6. TPS6508640 Settings Summary—GPOs

GPO	POWER GOOD (PG) or I^2C	STATE	OUTPUT TYPE
GPO1	PG	—	Push Pull
GPO2	I^2C	*Low*	Open Drain
GPO3	PG	—	Open Drain
GPO4	PG	—	Open Drain

Copyright © 2022 Texas Instruments Incorporated

8.4 TPS65086401 Design and Settings

The TPS65086401 device is intended to power the lower range of the Xilinx Zynq Ultrascale+ platform. An example block diagram for this system can be seen in Figure 8-6.

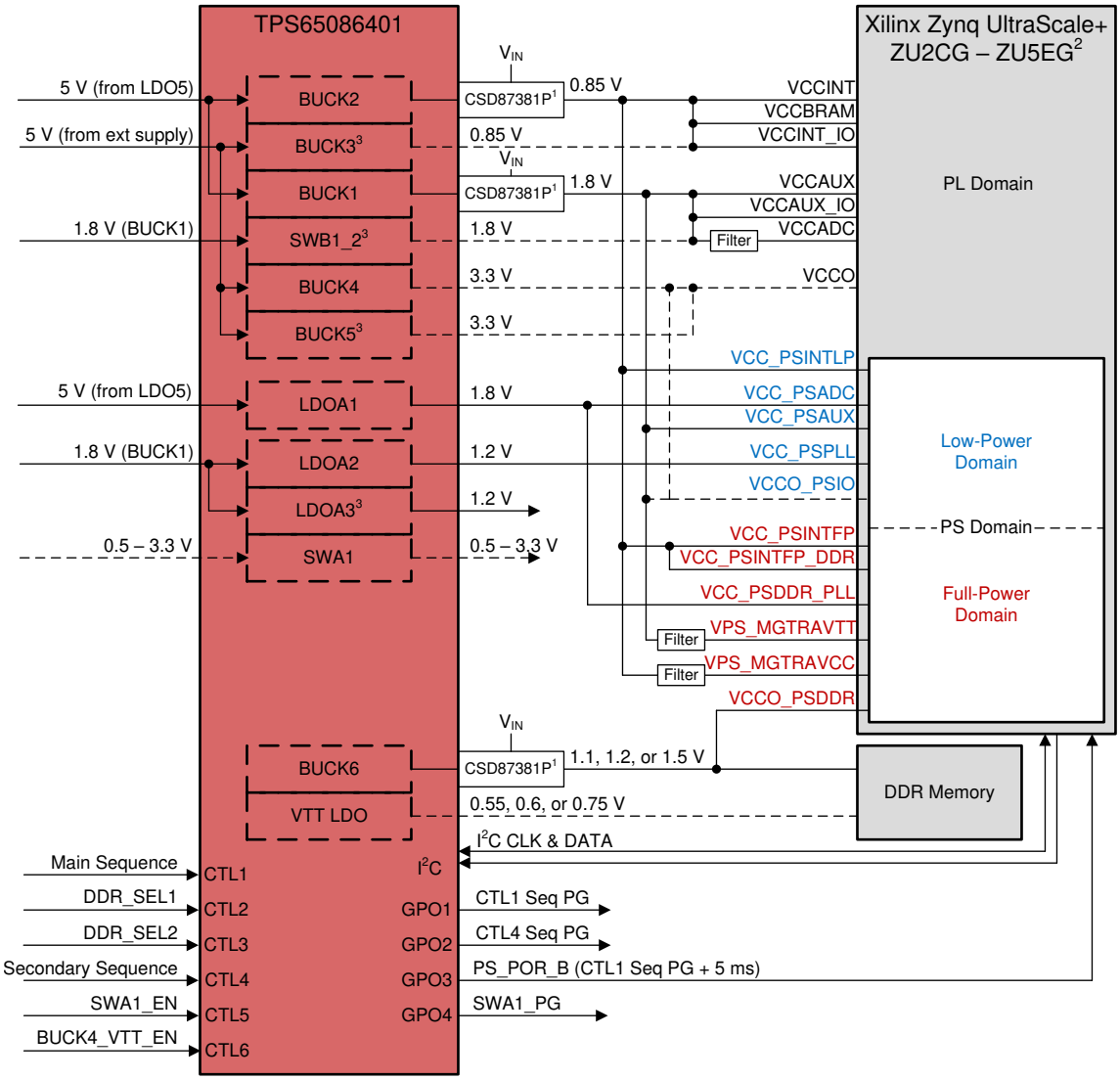

(1) External FETs can be scaled to meet the current requirements of each design; CSD87381P is suitable up to approximately 15 A.
(2) The TPS65086401 is not limited to the ZU2CG - ZU5EG. It can support other Ultrascale+ devices as long as the use case does not exceed the maximum specifications of the TPS65086401.
(3) PL Domain can be optionally powered by BUCK3, SWB1_2, BUCK5, and LDOA3 to allow it to be enabled and disabled by CTL4. This applies only to use cases where VCCINT current is less than 3 A.

Figure 8-6. TPS65086401 Power Map Example

The power up and power down sequences can be seen in Figure 8-7 and Figure 8-8. Regulators and GPOs are enabled by combination of CTL pins and regulator power good signals.

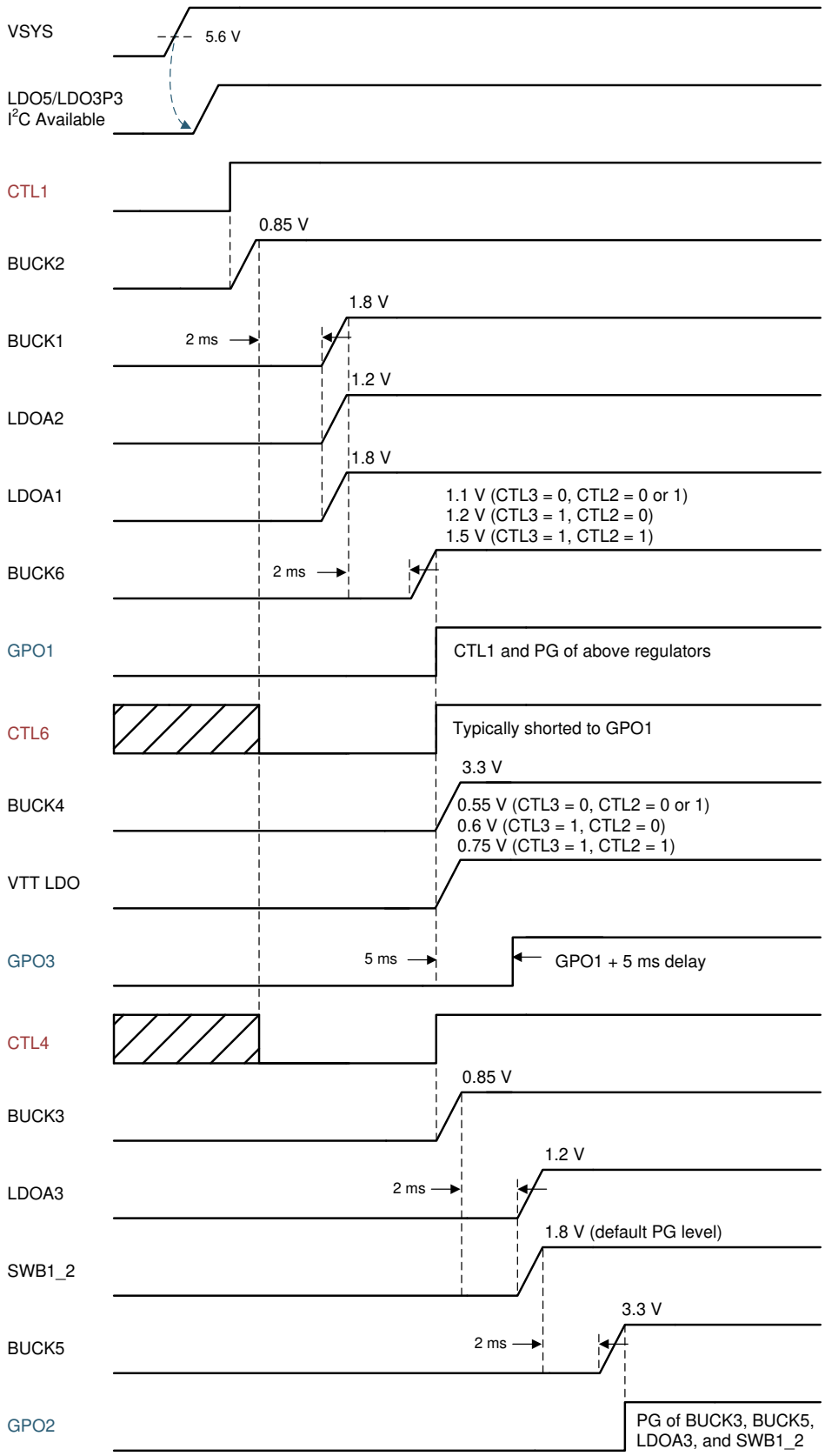

Figure 8-7. TPS65086401 Power-Up Sequence

Copyright © 2022 Texas Instruments Incorporated

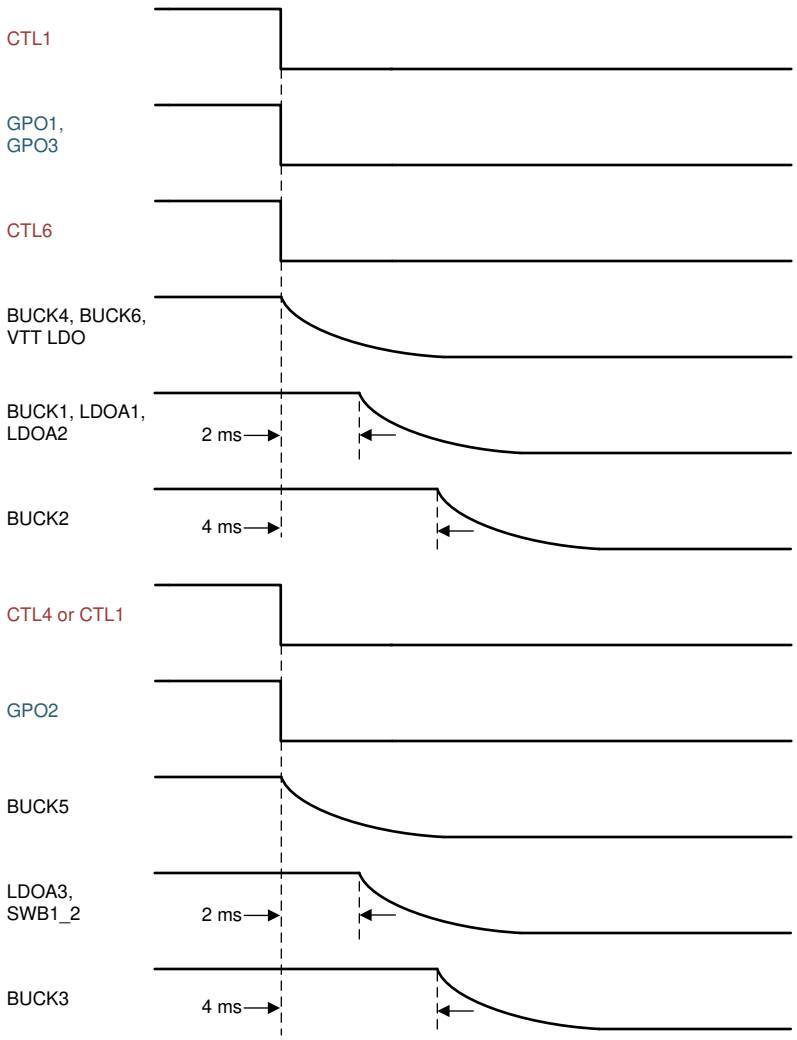

Figure 8-8. TPS65086401 Power-Down Sequence

CTL1 is used to enable the general system, CTL6 is typically connected to GPO1, and CTL4 can be used or not used depending on the application. CTL5 enables SWA1 independently of the rest of the sequence. CTL2 and CTL3 are used for BUCK6 voltage selection.

A summary of the part number specific settings can be seen in Section 8.4.1.

8.4.1 TPS65086401 OTP Summary

The following tables list the TPS65086401 device settings for the buck regulators, general purpose LDOs, VTT LDO, load switches, and GPOs. LDOA1 is used in sequence so all registers with SWB2_LDOA1 will function as LDOA1. Additionally, SWB1 and SWB2 are merged so all registers with LDOA1_SWB2 will be unused. All values which can be modified by I^2C after power on are shown in italics. Additional details (such as GPO power good inputs) can be found in the register map.

Table 8-7. TPS65086401 Settings Summary—Buck Regulators

REGULATOR	DEFAULT VOLTAGE	SLEEP VOLTAGE	STEP SIZE	SLP PIN	SLP_EN	POWER FAULT MASKED	FORCE PWM
BUCK1	*1.8 V*	*1.8 V*	25 mV	CTL3	*No*	*No*	*No*
BUCK2	*0.85 V*	*0.85 V*	10 mV	CTL3	*No*	*No*	*No*
BUCK3	*0.85 V*	*0.85 V*	25 mV	CTL3	*No*	*No*	*No*
BUCK4	*3.3 V*	*0 V*	25 mV	CTL6	*Yes*	*No*	*No*
BUCK5	*3.3 V*	*3.3 V*	25 mV	CTL3	*No*	*No*	*No*
BUCK6	*1.5 V* / 1.2 V	*1.1 V*	10 mV	CTL2 & CTL3	*Yes*	*No*	*No*

Table 8-8. TPS65086401 Settings Summary—General Purpose LDOs

REGULATOR	DEFAULT VOLTAGE	SLEEP VOLTAGE	ALWAYS ON	SLP PIN	SLP_EN	POWER FAULT MASKED
LDOA1	*1.8 V*	—	No	—	—	*No*
LDOA2	*1.2 V*	*1.2 V*	—	CTL3	*No*	*No*
LDOA3	*1.2 V*	*1.2 V*	—	CTL3	*No*	*No*

Table 8-9. TPS65086401 Settings Summary—VTT LDO

REGULATOR	ILIM SETTING	ENABLE PIN	POWER FAULT MASKED
VTT LDO	0.95 A	CTL6	*Yes*

Table 8-10. TPS65086401 Settings Summary—Load Switches

REGULATOR	POWER GOOD VOLTAGE	SWB1_2 MERGED	POWER FAULT MASKED
SWA1	3.3 V	—	*No*
SWB1	1.8 V	Yes	*No*
SWB2	1.8 V	Yes	*No*

Table 8-11. TPS65086401 Settings Summary—GPOs

GPO	POWER GOOD (PG) or I^2C	STATE	OUTPUT TYPE
GPO1	PG	—	Open Drain
GPO2	PG	—	Open Drain
GPO3	PG	—	Open Drain
GPO4	PG	—	Open Drain

Copyright © 2022 Texas Instruments Incorporated

8.5 TPS6508641 Design and Settings

The TPS6508641 device is intended to power the lower range of the Xilinx Zynq Ultrascale+ platform. It removes the need for an external 5 V regulator when compared with the TPS65086401 device and also supports a wider variety of Zynq Ultrascale+ power states. Figure 8-9 shows a simple example block diagram for an always-on system, while Figure 8-10 shows a block diagram for full power domain flexibility. See Xilinx's Ultrascale Architecture PCB Design for explanation of the power supply configurations.

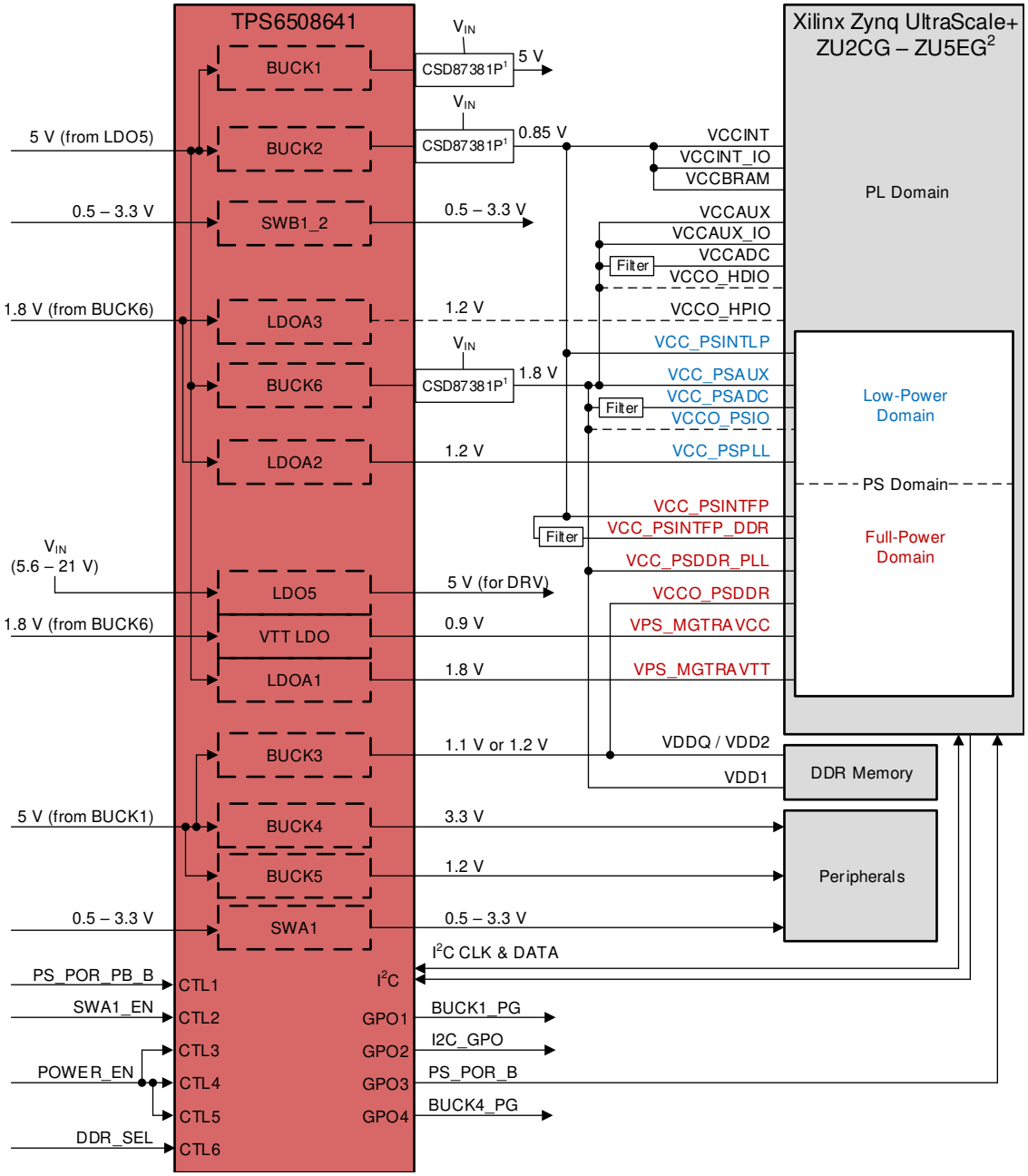

(1) External FETs can be scaled to meet the current requirements of each design; CSD87381P is suitable up to approximately 15 A.
(2) The TPS6508641 is not limited to the ZU2CG - ZU5EG. It can support other Ultrascale+ devices as long as the use case does not exceed the maximum specifications of the TPS6508641.

Figure 8-9. TPS6508641 Always-On Power Map Example

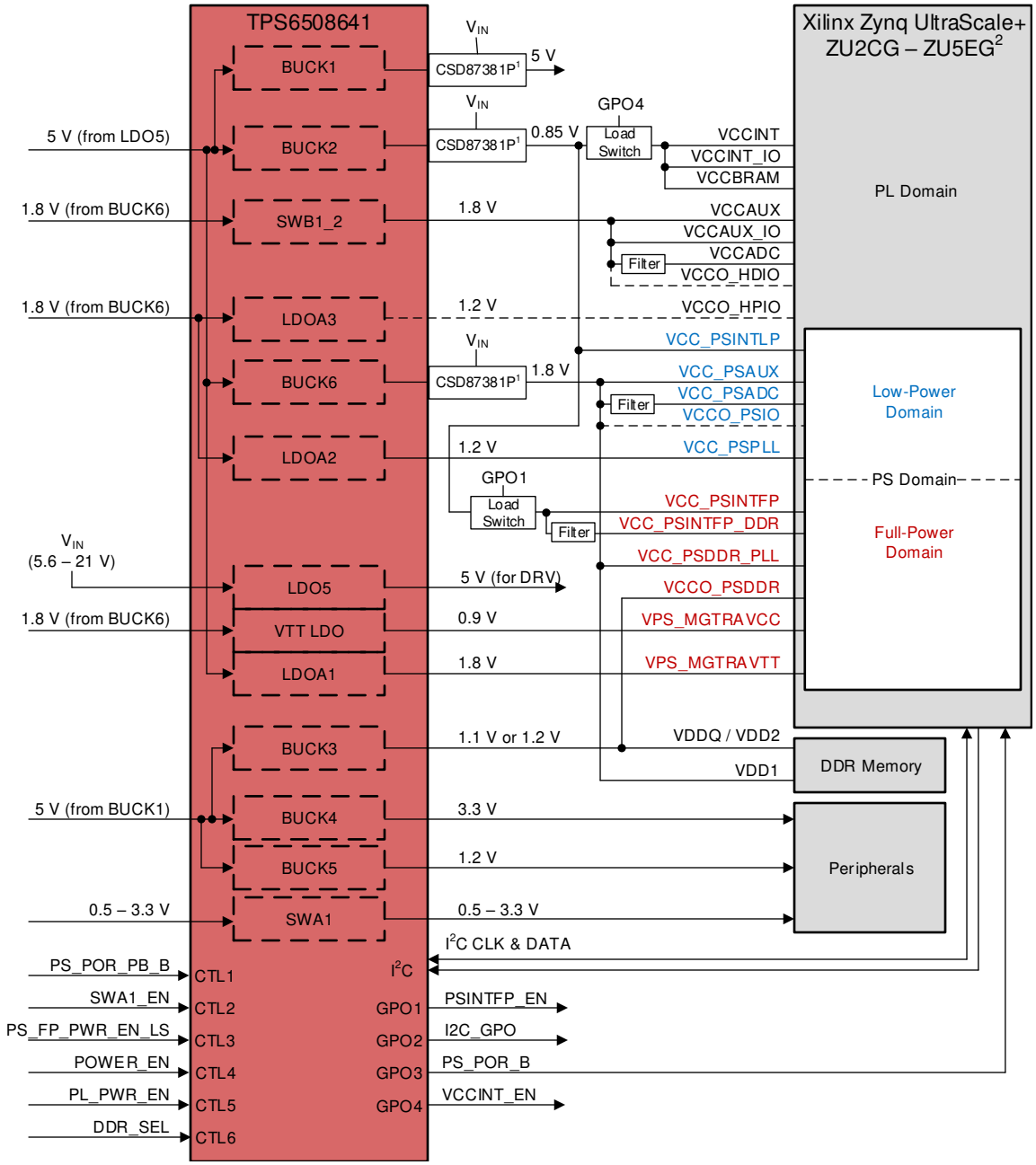

(1) External FETs can be scaled to meet the current requirements of each design; CSD87381P is suitable up to approximately 15 A.
(2) The TPS6508641 is not limited to the ZU2CG - ZU5EG. It can support other Ultrascale+ devices as long as the use case does not exceed the maximum specifications of the TPS6508641.

Figure 8-10. TPS6508641 Full Power Domain Flexibility Power Map Example

The power up and power down sequences can be seen in Figure 8-11 and Figure 8-12. Regulators and GPOs are enabled by combination of CTL pins and regulator power good signals.

Copyright © 2022 Texas Instruments Incorporated

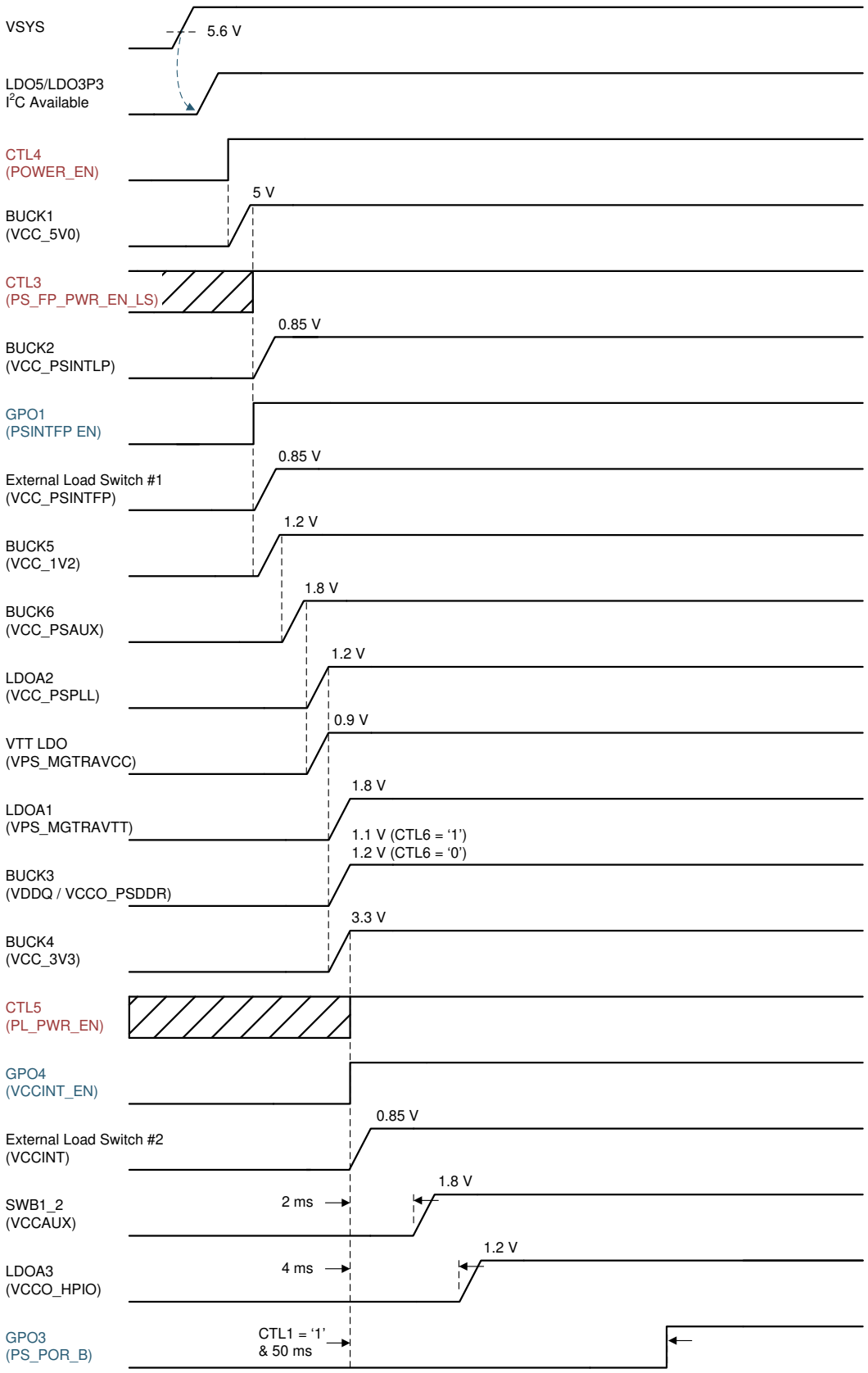

Figure 8-11. TPS6508641 Power-Up Sequence

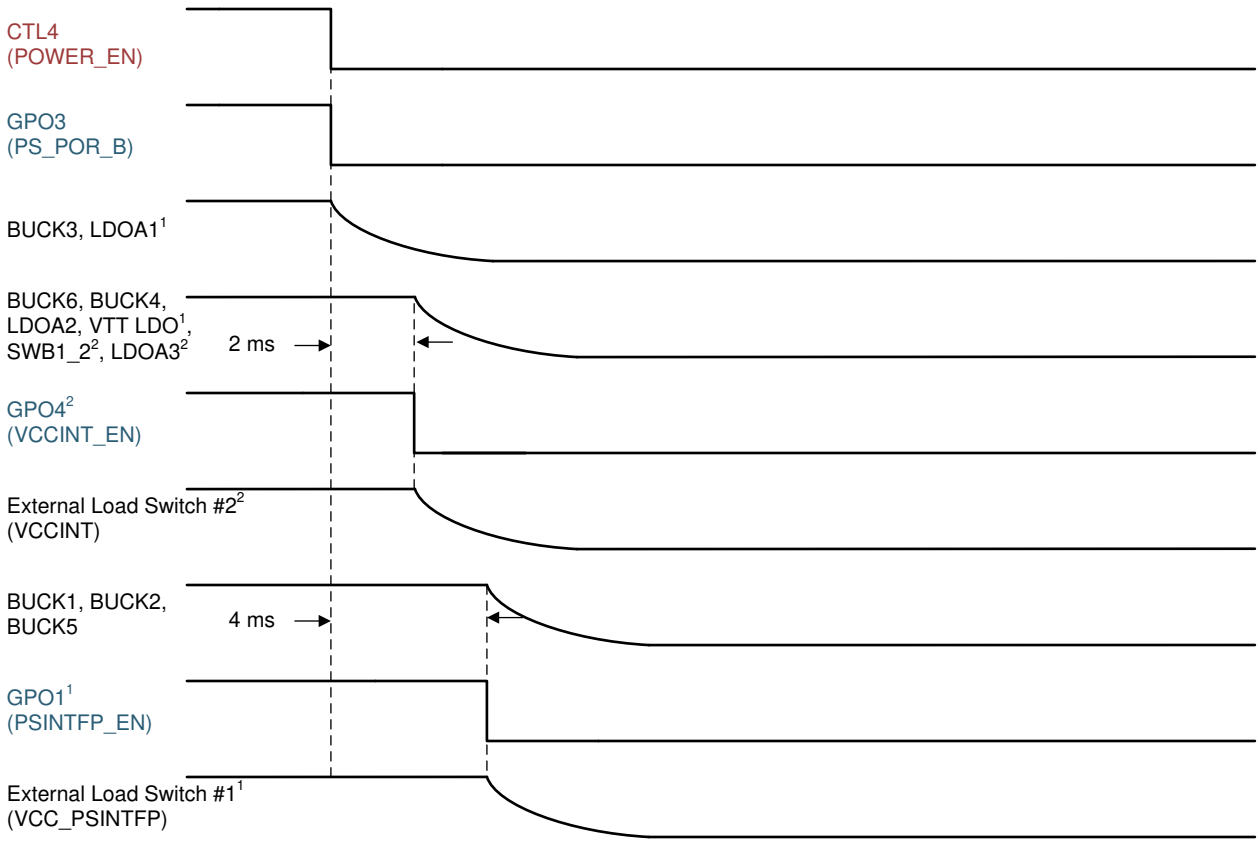

(1) Sequence shown assumes CTL3 is high. If CTL3 is set low before this point, these voltage regulators will already be disabled.
(2) Sequence shown assumes CTL5 is high. If CTL5 is set low before this point, these voltage regulators will already be disabled.

Figure 8-12. TPS6508641 Power-Down Sequence

Copyright © 2022 Texas Instruments Incorporated

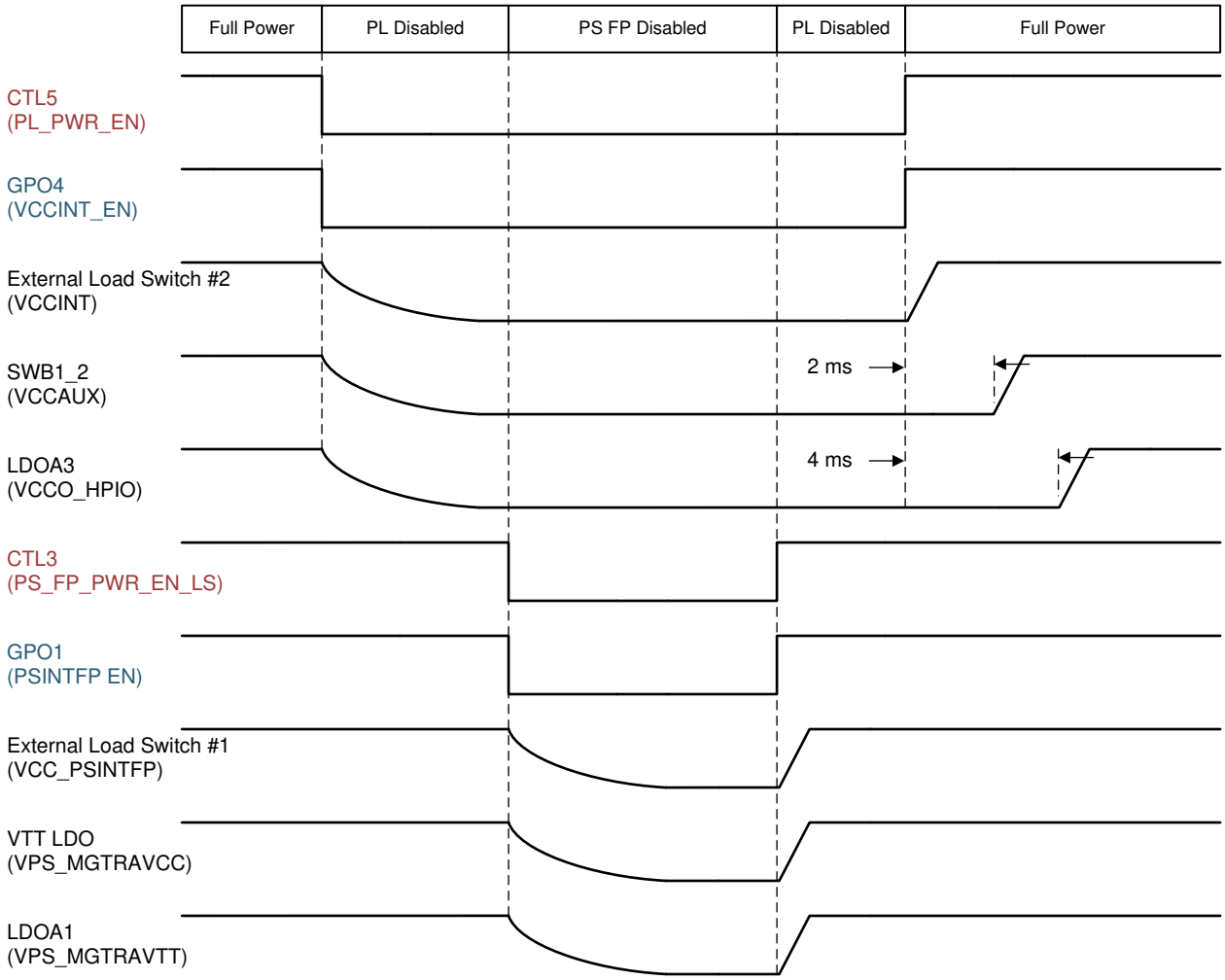

Figure 8-13. TPS6508641 Low Power States

The TPS6508641 device is designed to be able to support always on and full power domain flexibility power modes. The low power states can be omitted if not required.

CTL4 is used to start the primary power sequence and CTL1, CTL3, and CTL5 should all be high initially to complete the power up sequence. For always-on case, CTL3 and CTL5 can be shorted with CTL4.

CTL6 is used to select BUCK3 voltage between BUCK3_VID and BUCK3_SLP_VID register bits. Logic level low will result in 1.2 V while logic level high will result in 1.1 V.

CTL2 is used to enable and disable SWA1 and is independent of the rest of the sequence.

When CTL1 is set low, GPO3 (PS_POR_B) is set low regardless of the power state and has 50 ms delay before going high after CTL1 goes high. It is used as a reset for the Zynq Ultrascale+ device. It can be pulled up to LDO3P3 (3.3 V) or BUCK6 (1.8 V) as preferred with a 10 kΩ resistor and a pushbutton can short this CTL pin to GND when MPSoC reset is desired.

GPO1 and GPO4 are used to control load switches when utilizing the low power modes. The load switches can be omitted for cases where low power modes are not necessary.

VTT LDO voltage used to power VPS_MGTRAVCC is configured to 0.9 V in order to support all variant speeds, including -3E designs. It is within the absolute voltage range and is not expected to impact performance for non-3E designs based on testing with the Ultra96 board. For more information on VPS_MGTRAVCC voltage, see Xilinx's Ultrascale Architecture PCB Design, *Table 7-2 MPSoC PS Voltage Matrix by Speed/Temperature Grade*.

A summary of the part number specific settings can be seen in Section 8.5.1.

8.5.1 TPS6508641 OTP Summary

The following tables list the TPS6508641 device settings for the buck regulators, general purpose LDOs, VTT LDO, load switches, and GPOs. LDOA1 is used in sequence so all registers with SWB2_LDOA1 will function as LDOA1. Additionally, SWB1 and SWB2 are merged so all registers with LDOA1_SWB2 are unused. All values which can be modified by I^2C after power on are shown in italics. Additional details (such as GPO power good inputs) can be found in the register map.

Table 8-12. TPS6508641 Settings Summary—Buck Regulators

REGULATOR	DEFAULT VOLTAGE	SLEEP VOLTAGE	STEP SIZE	SLP PIN	SLP_EN	POWER FAULT MASKED	FORCE PWM
BUCK1	Ext FB	Ext FB	—	CTL6	*No*	*No*	*Yes*
BUCK2	*0.85 V*	*0.85 V*	10 mV	CTL6	*No*	*No*	*Yes*
BUCK3	*1.1 V*	*1.2 V*	25 mV	CTL6	*Yes*	*No*	*Yes*
BUCK4	*3.3 V*	*3.3 V*	25 mV	CTL6	*No*	*No*	*Yes*
BUCK5	*1.2 V*	*1.2 V*	25 mV	CTL6	*No*	*No*	*Yes*
BUCK6	*1.8 V*	*1.8 V*	25 mV	CTL6	*No*	*No*	*Yes*

Table 8-13. TPS6508641 Settings Summary—General Purpose LDOs

REGULATOR	DEFAULT VOLTAGE	SLEEP VOLTAGE	ALWAYS ON	SLP PIN	SLP_EN	POWER FAULT MASKED
LDOA1	*1.8 V*	—	No	—	—	*No*
LDOA2	*1.2 V*	*1.2 V*	No	CTL6	*Yes*	*No*
LDOA3	*1.2 V*	*1.2 V*	No	CTL6	*Yes*	*No*

Table 8-14. TPS6508641 Settings Summary—VTT LDO

REGULATOR	ILIM SETTING	ENABLE PIN	POWER FAULT MASKED
VTT LDO	1.8 A	CTL3	*No*

Table 8-15. TPS6508641 Settings Summary—Load Switches

REGULATOR	POWER GOOD VOLTAGE	SWB1_2 MERGED	POWER FAULT MASKED
SWA1	3.3 V	—	*Yes*
SWB1	1.8 V	Yes	*No*
SWB2	1.8 V	Yes	*No*

Table 8-16. TPS6508641 Settings Summary—GPOs

GPO	POWER GOOD (PG) or I^2C	STATE	OUTPUT TYPE
GPO1	PG	—	Open Drain
GPO2	I^2C		Open Drain
GPO3	PG	—	Open Drain
GPO4	PG	—	Open Drain

Copyright © 2022 Texas Instruments Incorporated

8.6 TPS65086470 Design and Settings

The TPS65086470 device is originally intended to power a Xilinx Artix 7 platform. Figure 8-14 shows an example block diagram for this system.

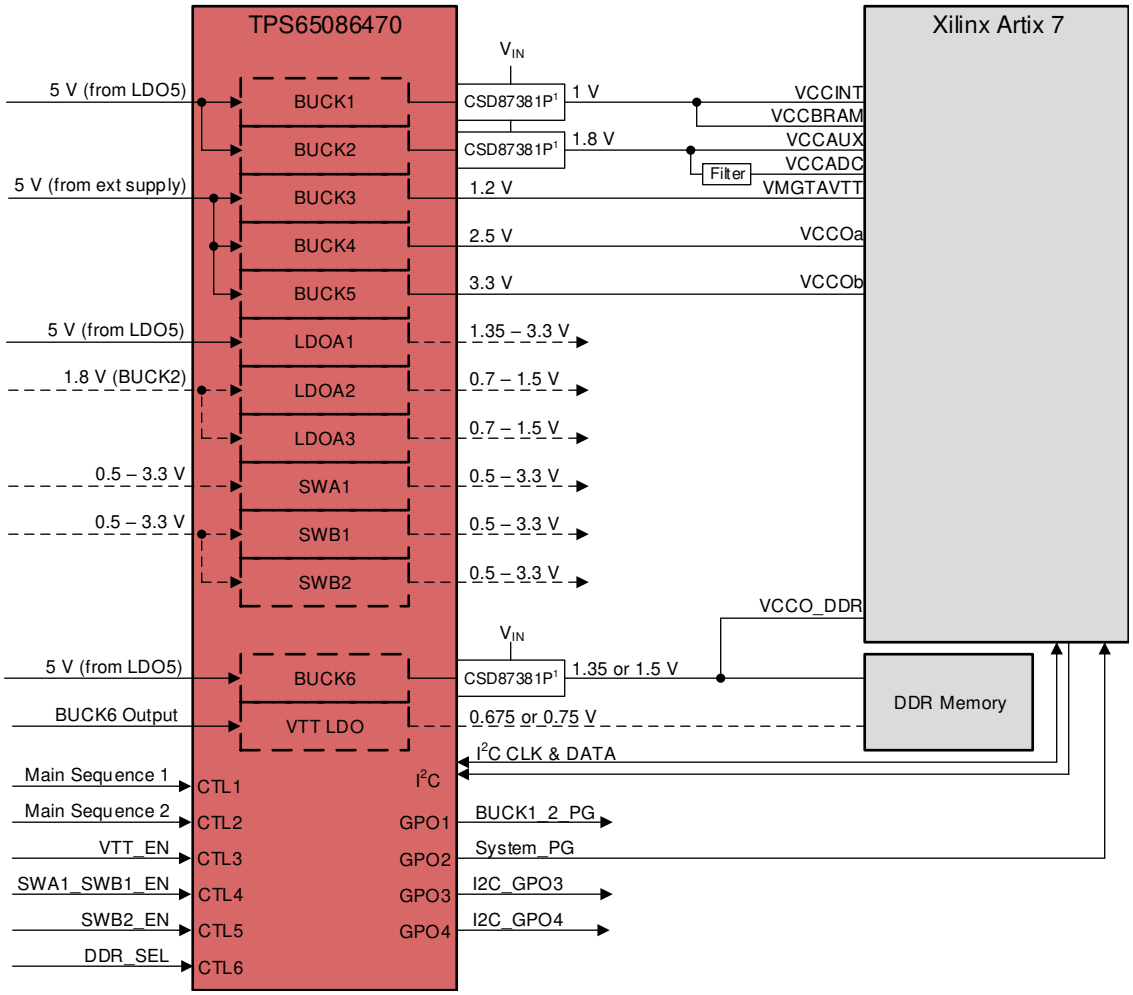

(1) External FETs can be scaled to meet the current requirements of each design; CSD87381P is suitable up to approximately 15 A.

Figure 8-14. TPS65086470 Power Map Example

Figure 8-15 and Figure 8-16 show the power-up and power-down sequences. Regulators and GPOs are enabled by combination of CTL pins and regulator power good signals.

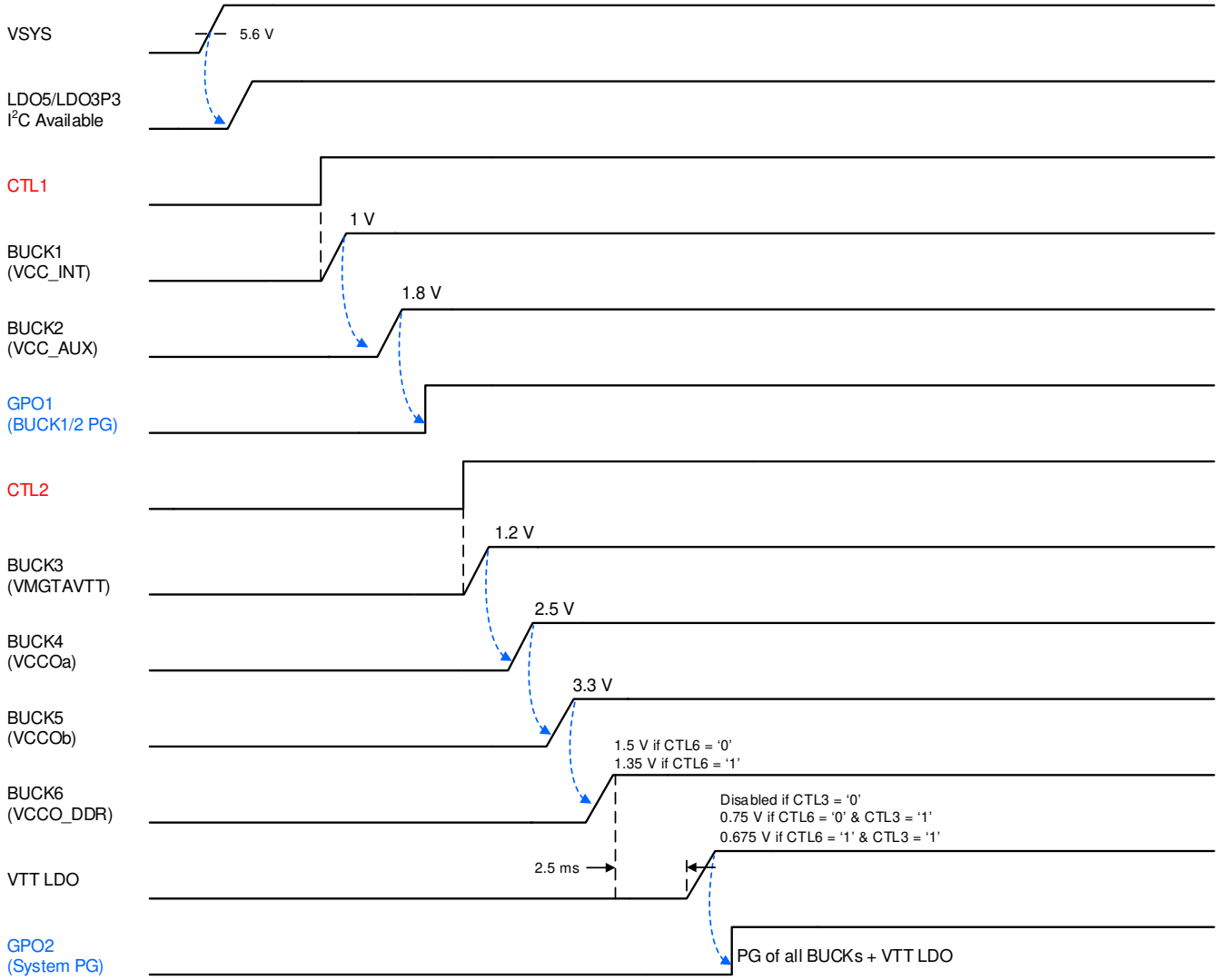

Figure 8-15. TPS65086470 Power-Up Sequence

Copyright © 2022 Texas Instruments Incorporated

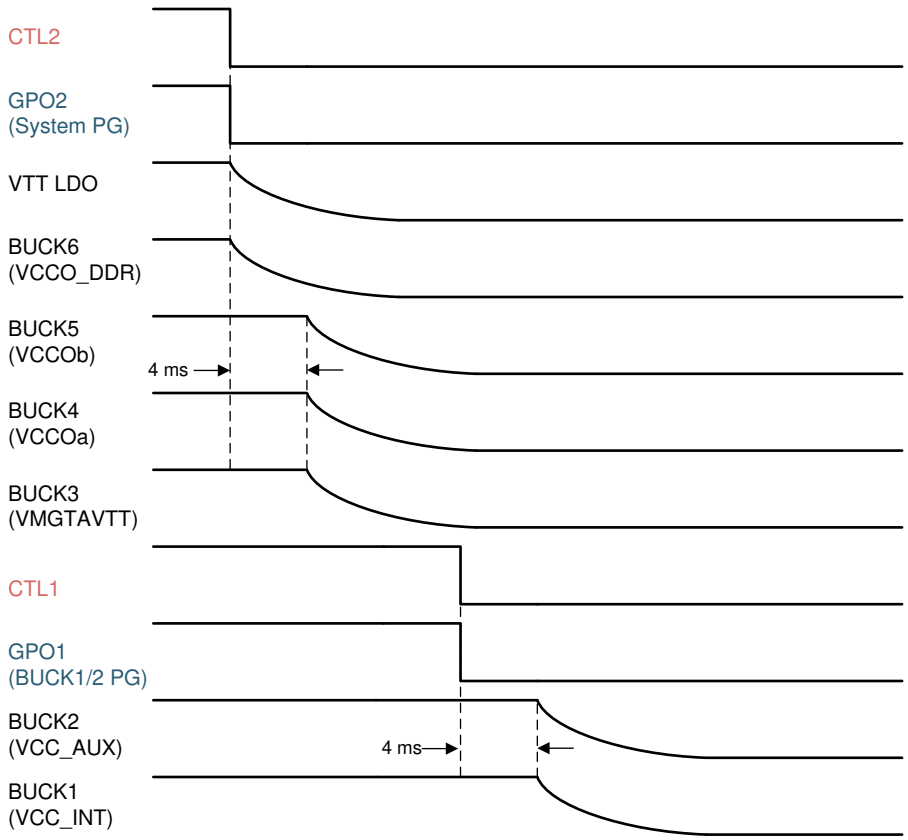

Figure 8-16. TPS65086470 Power-Down Sequence

If CTL1 and CTL2 are set low at the same time, both sequences will occur simultaneously. If CTL1 is set low before CTL2, GPO1 and GPO2 will go low and remaining bucks will be disabled as their PG enable is lost. For example, as BUCK2 is disabled after 4 ms, BUCK3 will start it's 4 ms delay. As such it is recommended to not set CTL1 low before CTL2.

Additionally, CTL4 can be used to enable SWA1 and SWB1. CTL5 can be used to enable SWB2. LDOA2 and LDOA3 are controlled only by I^2C.

A summary of the part number specific settings can be seen in Section 8.6.1.

8.6.1 TPS65086470 OTP Summary

The following tables list the TPS65086470 device settings for the buck regulators (Table 8-17), general purpose LDOs (Table 8-18), VTT LDO (Table 8-19), load switches (Table 8-20), and GPOs (Table 8-21). LDOA1 is not used in sequence so all registers with LDOA1_SWB2 will function as LDOA1. Additionally, SWB1 and SWB2 are not merged so all registers with SWB2_LDOA1 will function as SWB2. All values which can be modified by I^2C after power on are shown in italics. Additional details (such as GPO power good inputs) can be found in the register map.

Table 8-17. TPS65086470 Settings Summary—Buck Regulators

REGULATOR	DEFAULT VOLTAGE	SLEEP VOLTAGE	STEP SIZE	SLP PIN	SLP_EN	POWER FAULT MASKED	FORCE PWM
BUCK1	*1 V*	*1 V*	10 mV	CTL6	*No*	*No*	*No*
BUCK2	*1.8 V*	*1.8 V*	25 mV	CTL6	*No*	*No*	*No*
BUCK3	*1.2 V*	*1.2 V*	25 mV	CTL6	*No*	*No*	*No*
BUCK4	*2.5 V*	*2.5 V*	25 mV	CTL6	*No*	*No*	*No*
BUCK5	*3.3 V*	*3.3 V*	25 mV	CTL6	*No*	*No*	*No*
BUCK6	*1.5 V*	*1.35 V*	25 mV	CTL6	*Yes*	*No*	*No*

Table 8-18. TPS65086470 Settings Summary—General Purpose LDOs

REGULATOR	DEFAULT VOLTAGE	SLEEP VOLTAGE	ALWAYS ON	SLP PIN	SLP_EN	POWER FAULT MASKED
LDOA1	*1.8 V*	—	No	—	—	*Yes*
LDOA2	*0.7 V*	*0.7 V*	—	CTL6	*No*	*Yes*
LDOA3	*0.7 V*	*0.7 V*	—	CTL6	*No*	*Yes*

Table 8-19. TPS65086470 Settings Summary—VTT LDO

REGULATOR	ILIM SETTING	ENABLE PIN	POWER FAULT MASKED
VTT LDO	0.95 A	CTL3	*No*

Table 8-20. TPS65086470 Settings Summary—Load Switches

REGULATOR	POWER GOOD VOLTAGE	SWB1_2 MERGED	POWER FAULT MASKED
SWA1	3.3 V	—	*Yes*
SWB1	1.8 V	No	*Yes*
SWB2	1.8 V	No	*Yes*

Table 8-21. TPS65086470 Settings Summary—GPOs

GPO	POWER GOOD (PG) OR I^2C	STATE	OUTPUT TYPE
GPO1	PG	—	Open drain
GPO2	PG	—	Open drain
GPO3	I^2C	*Low*	Open drain
GPO4	I^2C	*Low*	Open drain

Copyright © 2022 Texas Instruments Incorporated

8.7 SMPS Voltage Regulators

The buck controllers integrate gate drivers for external power stages with programmable current limit (set by an external resistor at ILIMx pin), which allows for optimal selection of external passive components based on the desired system load. The buck converters include integrated power stage and require a minimum number of pins for power input, inductor, and output voltage feedback input. Combined with high-frequency switching, all these features allow use of inductors in small form factor, thus reducing total-system cost and size.

BUCK1–BUCK6 have selectable auto- and forced-pulse width modulation (PWM) mode through the BUCKx_MODE bit in the BUCKxCTRL register. In default auto mode, the VR automatically switches between PWM and pulsed frequency modulation (PFM) depending on the output load to maximize efficiency.

All controllers and converters can be used with the default V_{OUT} or can have their voltage dynamically changed at any time. This means that the rails can be default programmed for any available V_{OUT} by OTP programming at the factory, so the device starts up with the default voltage, or during operation the rail can be configured by I^2C to another operating V_{OUT} while the rail is enable or disabled. There are two step sizes or ranges available for V_{OUT} selection : 10-mV and 25-mV steps. The step-size range must be selected prior to use and must be programmed in the OTP at the factory. It is not subject to change during operation.

For the 10-mV step-size range V_{OUT} options, see Table 8-22. For the 25-mV step-size range V_{OUT} options, see Table 8-23.

Table 8-22. 10-mV Step-Size V_{OUT} Range

VID BITS	V_{OUT}	VID BITS	V_{OUT}	VID BITS	V_{OUT}
0000000	0	0101011	0.83	1010110	1.26
0000001	0.41	0101100	0.84	1010111	1.27
0000010	0.42	0101101	0.85	1011000	1.28
0000011	0.43	0101110	0.86	1011001	1.29
0000100	0.44	0101111	0.87	1011010	1.30
0000101	0.45	0110000	0.88	1011011	1.31
0000110	0.46	0110001	0.89	1011100	1.32
0000111	0.47	0110010	0.90	1011101	1.33
0001000	0.48	0110011	0.91	1011110	1.34
0001001	0.49	0110100	0.92	1011111	1.35
0001010	0.50	0110101	0.93	1100000	1.36
0001011	0.51	0110110	0.94	1100001	1.37
0001100	0.52	0110111	0.95	1100010	1.38
0001101	0.53	0111000	0.96	1100011	1.39
0001110	0.54	0111001	0.97	1100100	1.40
0001111	0.55	0111010	0.98	1100101	1.41
0010000	0.56	0111011	0.99	1100110	1.42
0010001	0.57	0111100	1.00	1100111	1.43
0010010	0.58	0111101	1.01	1101000	1.44
0010011	0.59	0111110	1.02	1101001	1.45
0010100	0.60	0111111	1.03	1101010	1.46
0010101	0.61	1000000	1.04	1101011	1.47
0010110	0.62	1000001	1.05	1101100	1.48
0010111	0.63	1000010	1.06	1101101	1.49
0011000	0.64	1000011	1.07	1101110	1.50
0011001	0.65	1000100	1.08	1101111	1.51
0011010	0.66	1000101	1.09	1110000	1.52
0011011	0.67	1000110	1.10	1110001	1.53
0011100	0.68	1000111	1.11	1110010	1.54
0011101	0.69	1001000	1.12	1110011	1.55
0011110	0.70	1001001	1.13	1110100	1.56
0011111	0.71	1001010	1.14	1110101	1.57
0100000	0.72	1001011	1.15	1110110	1.58
0100001	0.73	1001100	1.16	1110111	1.59
0100010	0.74	1001101	1.17	1111000	1.60
0100011	0.75	1001110	1.18	1111001	1.61
0100100	0.76	1001111	1.19	1111010	1.62
0100101	0.77	1010000	1.20	1111011	1.63
0100110	0.78	1010001	1.21	1111100	1.64
0100111	0.79	1010010	1.22	1111101	1.65
0101000	0.80	1010011	1.23	1111110	1.66
0101001	0.81	1010100	1.24	1111111	1.67
0101010	0.82	1010101	1.25		

Copyright © 2022 Texas Instruments Incorporated

Table 8-23. 25-mV Step-Size V_{OUT} Range

VID BITS	V_{OUT} (Converters)	V_{OUT} (Controllers)	VID BITS	V_{OUT}	VID BITS	V_{OUT}
0000000	0	0	0101011	1.475	1010110	2.550
0000001	0.425	1.000	0101100	1.500	1010111	2.575
0000010	0.450	1.000	0101101	1.525	1011000	2.600
0000011	0.475	1.000	0101110	1.550	1011001	2.625
0000100	0.500	1.000	0101111	1.575	1011010	2.650
0000101	0.525	1.000	0110000	1.600	1011011	2.675
0000110	0.550	1.000	0110001	1.625	1011100	2.700
0000111	0.575	1.000	0110010	1.650	1011101	2.725
0001000	0.600	1.000	0110011	1.675	1011110	2.750
0001001	0.625	1.000	0110100	1.700	1011111	2.775
0001010	0.650	1.000	0110101	1.725	1100000	2.800
0001011	0.675	1.000	0110110	1.750	1100001	2.825
0001100	0.700	1.000	0110111	1.775	1100010	2.850
0001101	0.725	1.000	0111000	1.800	1100011	2.875
0001110	0.750	1.000	0111001	1.825	1100100	2.900
0001111	0.775	1.000	0111010	1.850	1100101	2.925
0010000	0.800	1.000	0111011	1.875	1100110	2.950
0010001	0.825	1.000	0111100	1.900	1100111	2.975
0010010	0.850	1.000	0111101	1.925	1101000	3.000
0010011	0.875	1.000	0111110	1.950	1101001	3.025
0010100	0.900	1.000	0111111	1.975	1101010	3.050
0010101	0.925	1.000	1000000	2.000	1101011	3.075
0010110	0.950	1.000	1000001	2.025	1101100	3.100
0010111	0.975	1.000	1000010	2.050	1101101	3.125
0011000	1.000	1.000	1000011	2.075	1101110	3.150
0011001	1.025	1.025	1000100	2.100	1101111	3.175
0011010	1.050	1.050	1000101	2.125	1110000	3.200
0011011	1.075	1.075	1000110	2.150	1110001	3.225
0011100	1.100	1.100	1000111	2.175	1110010	3.250
0011101	1.125	1.125	1001000	2.200	1110011	3.275
0011110	1.150	1.150	1001001	2.225	1110100	3.300
0011111	1.175	1.175	1001010	2.250	1110101	3.325
0100000	1.200	1.200	1001011	2.275	1110110	3.350
0100001	1.225	1.225	1001100	2.300	1110111	3.375
0100010	1.250	1.250	1001101	2.325	1111000	3.400
0100011	1.275	1.275	1001110	2.350	1111001	3.425
0100100	1.300	1.300	1001111	2.375	1111010	3.450
0100101	1.325	1.325	1010000	2.400	1111011	3.475
0100110	1.350	1.350	1010001	2.425	1111100	3.500
0100111	1.375	1.375	1010010	2.450	1111101	3.525
0101000	1.400	1.400	1010011	2.475	1111110	3.550
0101001	1.425	1.425	1010100	2.500	1111111	3.575
0101010	1.450	1.450	1010101	2.525		

Copyright © 2022 Texas Instruments Incorporated

8.7.1 Controller Overview

The controllers are fast-reacting, high-frequency, scalable output power controllers capable of driving two external N-MOSFETs. They are D-CAP2 controller scheme that optimizes transient responses at high load currents for such applications as CORE and DDR supplies. The output voltage is compared with internal reference voltage after divider resistors. The PWM comparator determines the timing to turn on the high-side MOSFET. The PWM comparator response maintains a very small PWM output ripple voltage. Because the device does not have a dedicated oscillator for control loop on board, switching cycle is controlled by the adaptive on-time circuit. The on-time is controlled to meet the target switching frequency by feed-forwarding the input and output voltage into the on-time one-shot timer.

The D-CAP2 control scheme has an injected ripple from the SW node that is added to the reference voltage to simulate output ripple, which eliminates the need for ESR-induced output ripple from D-CAP™ mode control. Thus, low-ESR output capacitors (such as low-cost ceramic MLCC capacitors) can be used with the controllers.

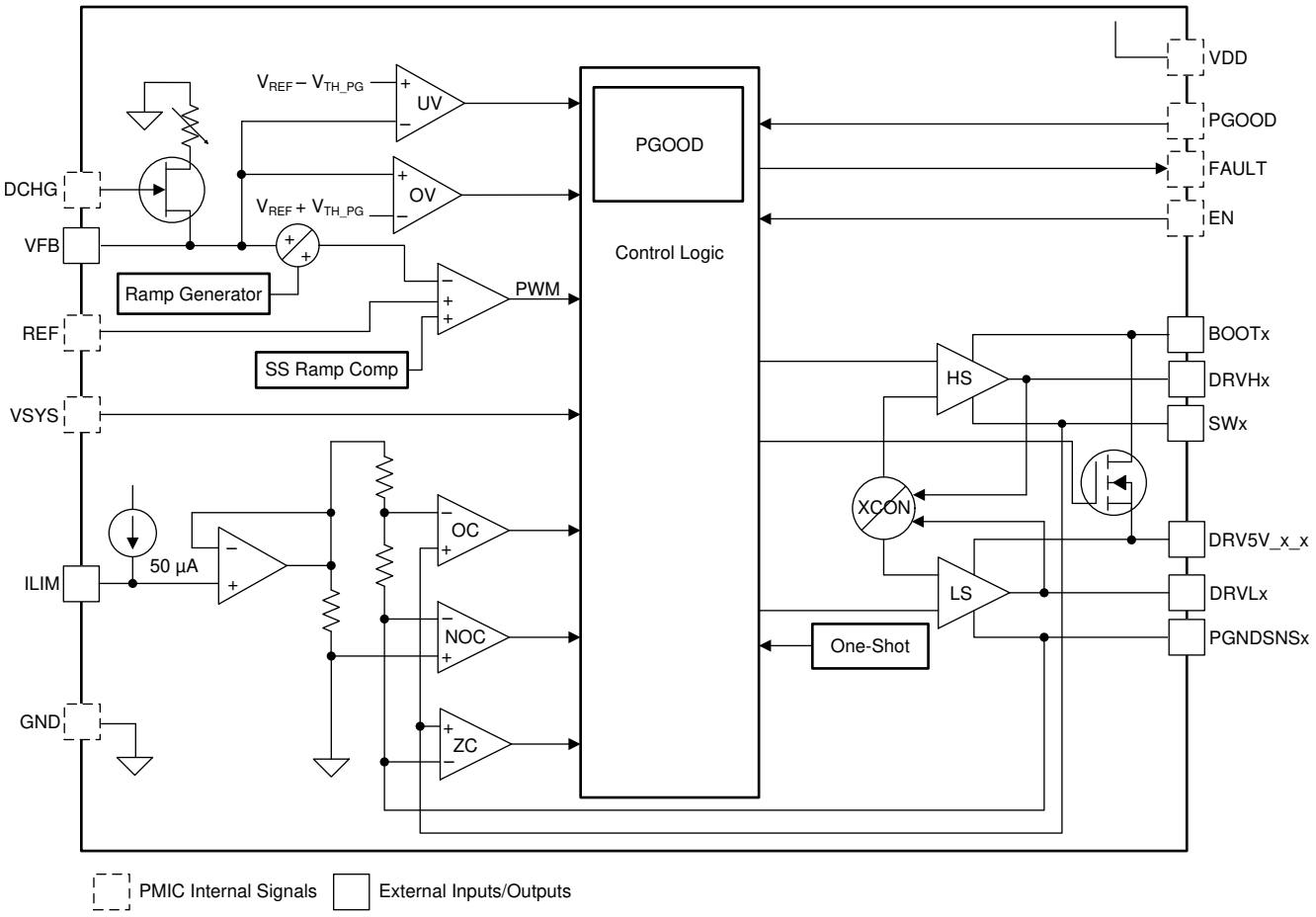

Copyright © 2017, Texas Instruments Incorporated

Figure 8-17. Controller Block Diagram

Copyright © 2022 Texas Instruments Incorporated

8.7.2 Converter Overview

The PMIC synchronous step-down DCDC converters include a unique hysteretic PWM controller scheme which enables a high switching frequency converter, excellent transient and AC load regulation as well as operation with cost-competitive external components. The converter topology supports forced PWM mode as well as power-save mode operation. Power-save mode operation, or PFM mode, reduces the quiescent current consumption and ensures high conversion efficiency at light loads by skipping switch pulses. In forced PWM mode, the device operates on a quasi-fixed frequency, avoids pulse skipping, and allows filtering of the switch noise by external filter components. The PMIC device offers fixed output voltage options featuring smallest solution size by using only three external components per converter.

A significant advantage of PMIC compared to other hysteretic PWM controller topologies is its excellent AC load transient regulation capability. When the output voltage falls below the threshold of the error comparator, a switch pulse is initiated, and the high-side switch is turned on. The high-side switch remains turned on until a minimum ON-time of t_{ONmin} expires and the output voltage trips the threshold of the error comparator or the inductor current reaches the high-side switch current limit. When the high-side switch turns off, the low-side switch rectifier is turned on and the inductor current ramps down until the high-side switch turns on again or the inductor current reaches zero. In forced PWM mode operation, negative inductor current is allowed to enable continuous conduction mode even at no load condition.

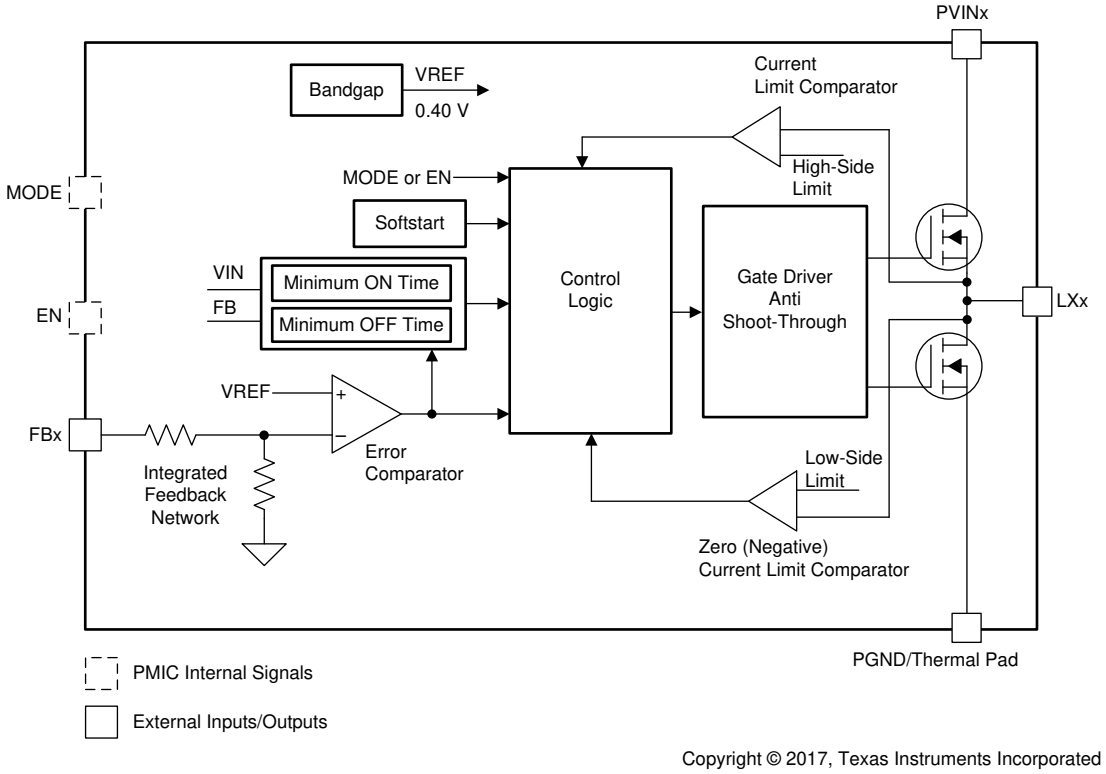

Copyright © 2017, Texas Instruments Incorporated

Figure 8-18. Converter Block Diagram

8.7.3 DVS

BUCK1–BUCK6 support dynamic voltage scaling (DVS) for maximum system efficiency. The VR outputs can slew up and down in 25-mV steps for the converters, and either 10-mV or 25-mV steps for the controllers, using the 7-bit voltage ID (VID) defined in Section 7.7 and Section 7.8. DVS slew rate is minimum 2.5 mV/µs. In order to meet the minimum slew rate, VID progresses to the next code at 3-µs (nom) interval per 10-mV or at 6-µs interval per 25-mV steps. When DVS is active, the VR is forced into PWM mode, unless BUCKx_DECAY = 1, to ensure the output keeps track of VID code with minimal delay. Additionally, PGOOD is masked when DVS is in progress. Figure 8-19 shows an example of slew down and up from one VID to another (step size of 10 mV).

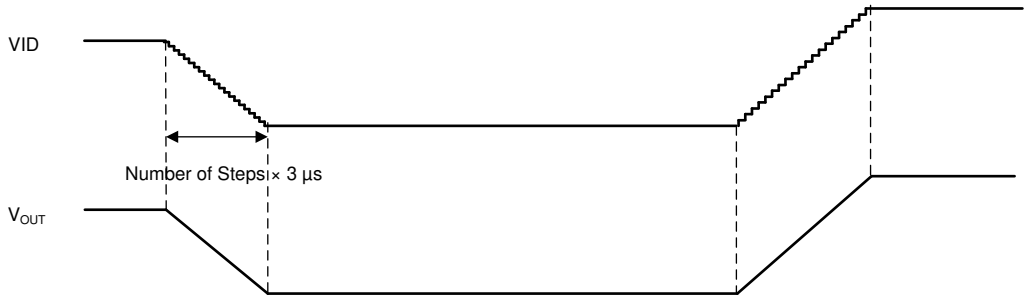

Figure 8-19. DVS Timing Diagram I (BUCKx_DECAY = 0)

As shown in Figure 8-20, if a BUCKx_VID[6:0] is set to 7b000 0000, its output voltage will slew down to 0.5 V first, and then will drift down to 0 V as the SMPS stops switching. Subsequently, if a BUCKx_VID[6:0] is set to a value (neither 7b000 0000 nor 7b000 0001) when its output voltage is less than 0.5 V, the VR will ramp up to 0.5 V first with soft-start kicking in, then will slew up to target voltage in the slew rate mentioned previously. It must be noted that a fixed 200 µs of soft-start time is reserved for V_{OUT} to reach 0.5 V. In this case, however, the SMPS is not forced into PWM mode as it otherwise could cause V_{OUT} to droop momentarily if V_{OUT} might have been drifting above 0.5 V for any reason.

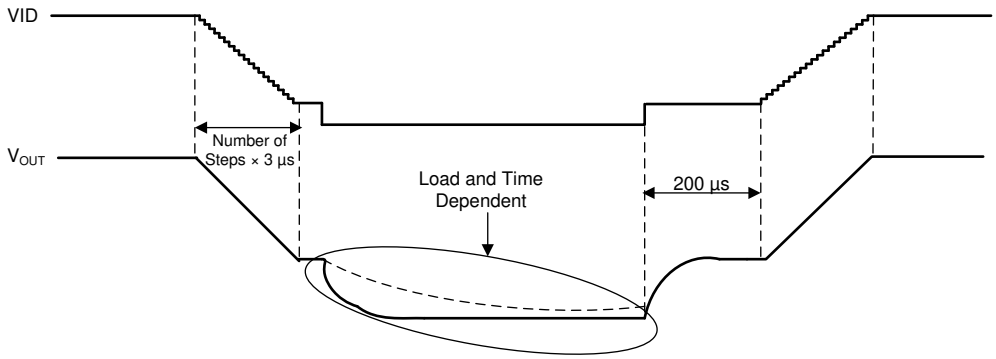

Figure 8-20. DVS Timing Diagram II (BUCKx_DECAY = 0)

Copyright © 2022 Texas Instruments Incorporated

8.7.4 Decay

In addition to DVS, BUCK1–BUCK6 can decay down to a lower voltage when BUCKx_DECAY bit in BUCKxCTRL register is set to 1. Decay mode is only used in a downward direction of VID. The VR does not control slew rate. As both high-side and low-side FETs stop switching, the output voltage ramps down naturally, dictated by current drawn from the load and output filtering capacitance. When the VR is in the middle of decay down its PGOOD is masked until V_{OUT} falls below the over-voltage (OV) threshold of the set VID value. Figure 8-21 shows two cases that differ from each other as to whether V_{OUT} has reached the target voltage corresponding to a new VID when the VR is commanded to slew back up to a higher voltage. In case that V_{OUT} has not decayed down below VID as denoted case 2, the VR will wait for VID to catch up, and then V_{OUT} will start ramping up to keep up with the VID ramp.

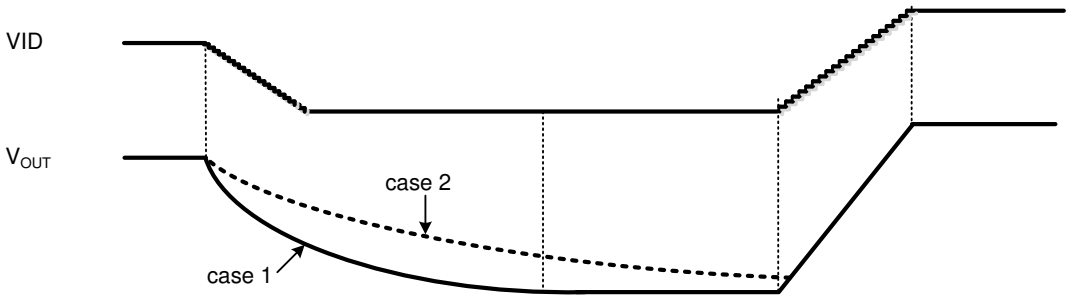

Figure 8-21. Decay Down to a Lower V_{OUT} and Slew Up

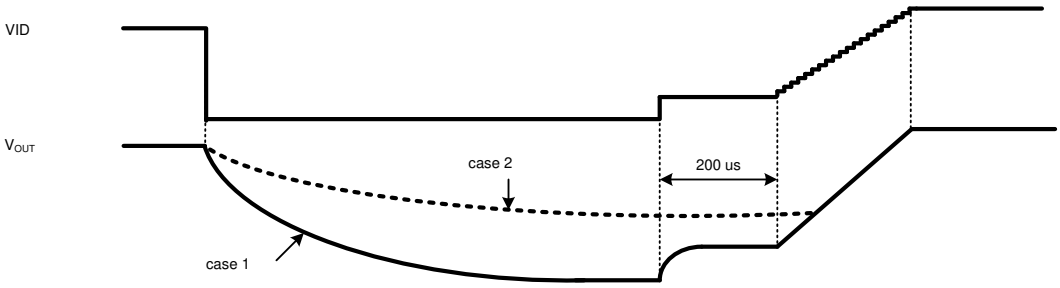

Figure 8-22. Decay Down to 0 V and Slew Up

8.7.5 Current Limit

The buck controllers (BUCK1, BUCK2, and BUCK6) have inductor-valley current-limit architecture and the current limit is programmable by an external resistor at the ILIMx pin. Equation 1 shows the calculation for a desired resistor value, depending on specific application conditions. I_{LIMREF} is the current source out of the ILIMx pin that is typically 50 µA, and R_{DSON} is the maximum channel resistance of the low-side FET. The scaling factor is 1.3 to take into account all errors and temperature variations of R_{DSON}, I_{LIMREF}, and R_{ILIM}. Finally, 8 is another scaling factor associated with I_{LIMREF}.

$$R_{ILIM} = \frac{R_{DSON} \times 8 \times 1.3 \times \left(I_{LIM} - \frac{I_{ripple(min)}}{2} \right)}{I_{LIMREF}} \tag{1}$$

where

- I_{LIM} is the target current limit. An appropriate margin must be allowed when determining I_{LIM} from maximum output DC load current.
- $I_{ripple(min)}$ is the minimum peak-to-peak inductor ripple current for a given V_{OUT}.

$$I_{ripple(min)} = \frac{V_{OUT}\ (V_{IN(MIN)} - V_{OUT})}{L_{max} \times V_{IN(MIN)} \times f_{sw(max)}} \tag{2}$$

where

- L_{max} is maximum inductance
- $f_{sw(max)}$ is maximum switching frequency
- $V_{IN(MIN)}$ minimum input voltage to the external power stage

The buck converter limit inductor peak current cycle-by-cycle to I_{IND_LIM} is specified in Section 7.8.

The current limit circuit also protects against reverse current going back into the low side FET from the load. When operating in Force PWM mode, the inductor current is expected to go negative so it is important to ensure that the R_{ILIM} value is sufficient to account for this. If operating in PFM, this can be neglected. The equation for Force PWM minimum R_{ILIM} value is:

$$R_{ILIM} \geq \frac{R_{DSON} \times 8 \times 1.3 \times \left(\frac{I_{ripple(max)}}{2} \right)}{I_{LIMREF}} \tag{3}$$

where

- $I_{ripple(max)}$ is the maximum peak-to-peak inductor ripple current for a given V_{OUT}.

$$I_{ripple(max)} = \frac{V_{OUT}\ (V_{IN(MAX)} - V_{OUT})}{L_{min} \times V_{IN(MAX)} \times f_{sw(min)}} \tag{4}$$

where

- L_{min} is minimum inductance
- $f_{sw(min)}$ is minimum switching frequency
- $V_{IN(MAX)}$ maximum input voltage to the external power stage

If R_{ILIM} is too low for the chosen inductor and voltage conditions, then the ripple current at no load will trigger the negative current limit, forcing the low side FET to turn off. This will eventually result in the output voltage increasing above target regulation point due to irregular duty cycle created by current limit being triggered.

Copyright © 2022 Texas Instruments Incorporated

8.8 LDOs and Load Switches

8.8.1 VTT LDO

Typically powered from the BUCK6 output, the VTT LDO tracks FBVOUT6 and regulates it's output to FBVOUT6 / 2. The LDO current limit is OTP dependent, and it is designed specifically to power DDR memory. The LDO core is a transconductance amplifier with large gain, and it drives a current output stage that either sources or sinks current depending on the deviation of the VTTFB pin voltage from the target regulation voltage.

8.8.2 LDOA1–LDOA3

The TPS650864 device integrates three general purpose LDOs. LDOA1 is powered from a 5-V supply through the DRV5V_2_A1 pin and it can be factory configured to be an Always-On rail (stay on even in case of emergency shutdown) as long as a valid power supply is available at VSYS. See Table 8-24 for LDOA1 output voltage options. LDOA2 and LDOA3 share a power input pin (PVINLDOA2_A3). The output regulation voltages are set by writing to LDOAx_VID[3:0] bits (Reg 0x9A, 0x9B, and 0xAE). See Table 8-25 for LDOA2 and LDOA3 output voltage options. LDOA1 is controlled by the LDOA1_SWB2_CTRL register.

Table 8-24. LDOA1 Output Voltage Options

VID BITS	V_{OUT}	VID BITS	V_{OUT}	VID BITS	V_{OUT}	VID BITS	V_{OUT}
0000	1.35	0100	1.8	1000	2.3	1100	2.85
0001	1.5	0101	1.9	1001	2.4	1101	3.0
0010	1.6	0110	2.0	1010	2.5	1110	3.3
0011	1.7	0111	2.1	1011	2.6	1111	Not Used

Table 8-25. LDOA2 and LDOA3 Output Voltage Options

VID BITS	V_{OUT}	VID BITS	V_{OUT}	VID BITS	V_{OUT}	VID BITS	V_{OUT}
0000	0.70	0100	0.90	1000	1.10	1100	1.30
0001	0.75	0101	0.95	1001	1.15	1101	1.35
0010	0.80	0110	1.00	1010	1.20	1110	1.40
0011	0.85	0111	1.05	1011	1.25	1111	1.50

8.8.3 Load Switches

The PMIC features three general-purpose load switches. SWA1 has its own power input pin (PVINSWA1), while SWB1 and SWB2 share one power input pin (PVINSWB1_B2). All switches have built-in slew rate control during start-up to limit the inrush current.

8.9 Power Goods (PGOOD or PG) and GPOs

The device provides information on status of VRs through four GPO pins along with Power Good Status registers defined in Section 8.13.50 and Section 8.13.51. Power Good information of any individual VR and load switch can be assigned to be part of the PGOOD tree as defined from Section 8.13.40 to Section 8.13.47. PGOOD assertion delays are programmable from 0 ms to 15 ms for GPO1, 5 ms to 100 ms for GPO3, and 0 ms to 100 ms for GPO2 and GPO4, respectively, as are defined in Section 8.13.21 and Section 8.13.34.

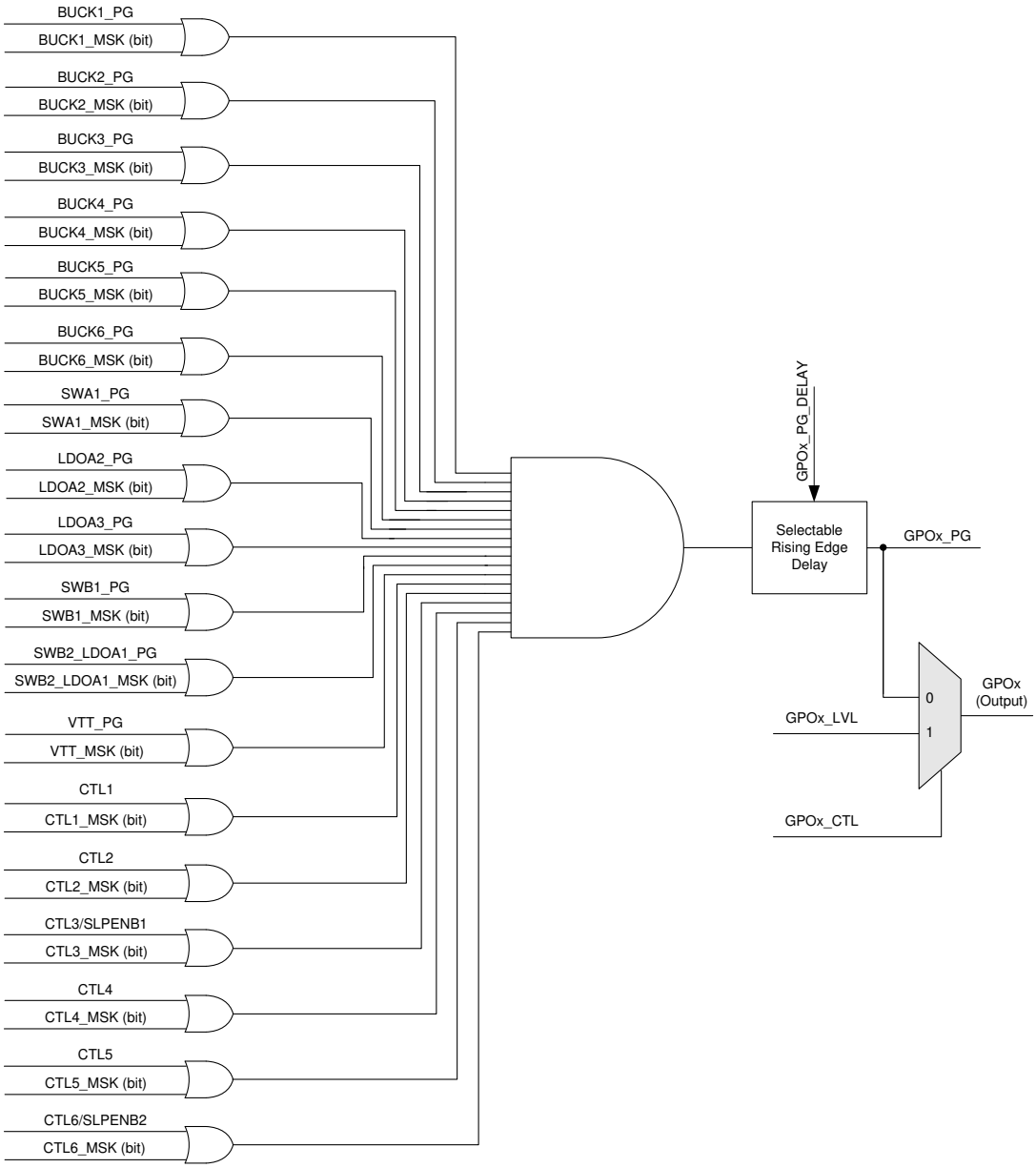

Figure 8-23. Power Good Tree

Alternatively, the GPOs can be used as general purpose outputs controlled by the user through I^{2}C. Refer to Section 8.13.37 for details on controlling the GPOs in I^{2}C control mode. When configured as push-pull, LDO3P3 is used for logic-level high.

Copyright © 2022 Texas Instruments Incorporated

8.10 Power Sequencing and VR Control

The device has three different ways of sequencing the rails during power up and power down:

- Rail enabled by CTLx pin
- Rail enabled by Power Good (PG) of previously enabled rail
- Rail enabled by I^2C software command

A delay can be added from any CTLx pin or PG to the enable of the subjected enabled rail. This creates a very flexible device capable of many sequence options. If a rail cannot be sequenced automatically, any rail can be enabled or disabled through an I^2C command.

8.10.1 CTLx Sequencing

The device has six control-input pins (CTL1–CTL6) to control six SMPS regulators, three LDO regulators, and three load switches. This allows the user to define up to six distinctive groups, to which each VR can be assigned for highly flexible power sequencing. Of the six CTLx pins, CTL3 and CTL6 can be configured alternatively to active-low sleep enable pins. For instance, if a system level SLEEP state is defined such that BUCK1 output regulation voltage is lower than in the normal mode, then BUCK1 SLEEP state can be assigned to CTL3 or CTL6. By being pulled low, either CTL3 or CTL6 can be used to put BUCK1 into SLEEP state, and BUCK1 will regulate its output at a voltage defined by BUCK1_SLP_VID[6:0] in Section 8.13.23. For a demonstration of this feature, Figure 8-24 shows how BUCK1 is enabled from the CTL1 pin.

8.10.2 PG Sequencing

Any rail can be sequenced by the Power Good of a prior rail. This can be combined with the CTLx method to allow for further sequence control and create more distinctive groups of enables than the six from CTLx. This also allows some of the CTLx pins to be freed up for other purposes such as logic input gates. For a demonstration of this feature, Figure 8-24 shows how the BUCK5 is enabled from the BUCK4 PG.

Copyright © 2022 Texas Instruments Incorporated

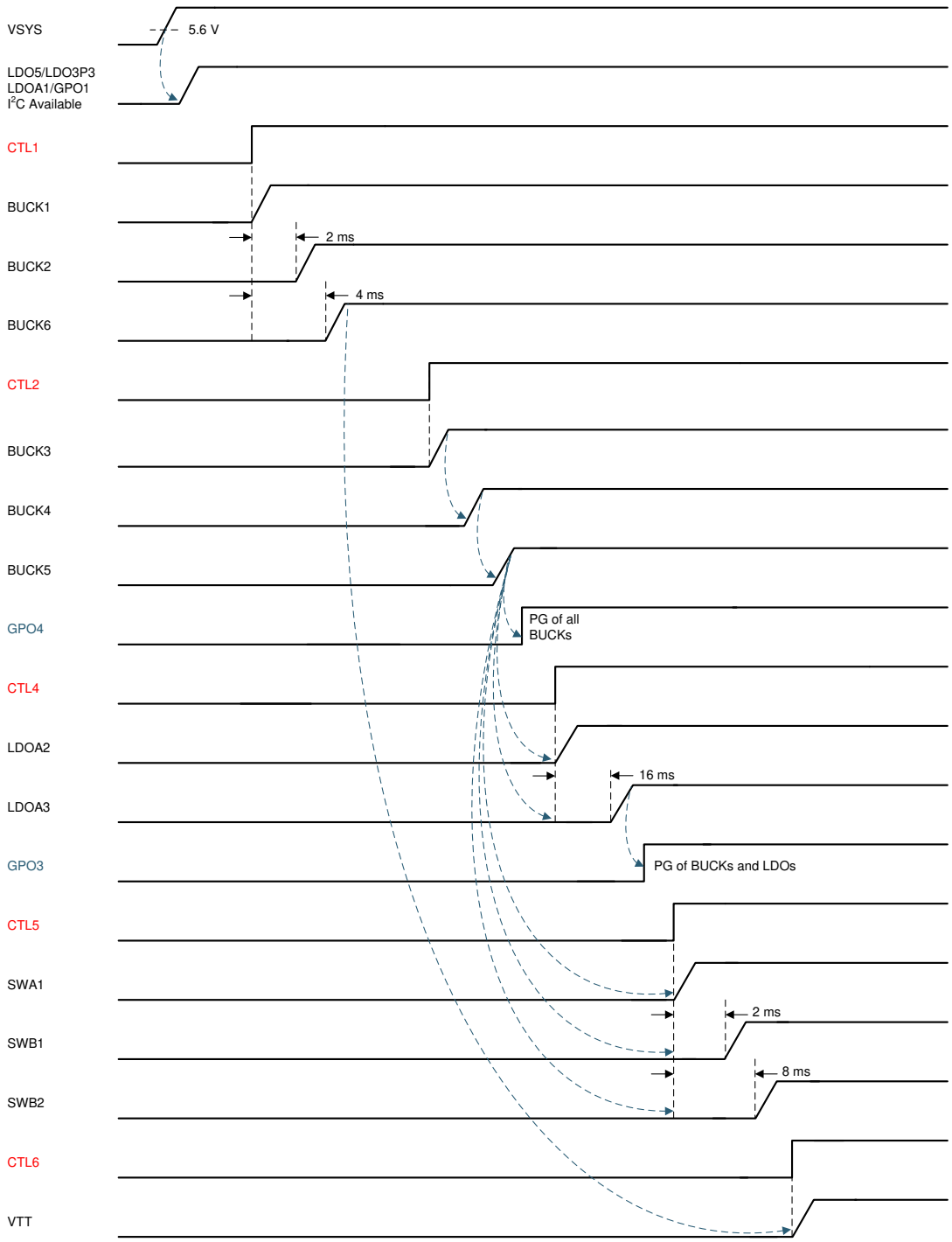

Figure 8-24. Generic Power-Up Sequence Example

Copyright © 2022 Texas Instruments Incorporated

8.10.3 Enable Delay

A delay can be added to the enable of any rail after the desired CTLx and PGs are met. This allows for the option to create additional timing groups from either CTLx pins or internal PGs. For a demonstration of this feature, Figure 8-24 shows how BUCK2 and BUCK6 are enabled after BUCK1 is enabled from CTL1 pin.

8.10.4 Power-Up Sequence

When a valid power supply is detected at the VSYS pin as V_{SYS} crosses above $V_{SYS_UVLO_5V}$ + $V_{SYS_UVLO+5V_HYS}$, the power-up sequence is initiated by driving one of the control input pins high, followed by the rest of pins in order. Figure 8-24 is an example where CTL1–CTL4 are defined to control four groups of VRs, while GPO3 and GPO4 are defined to provide a PGOOD status of two groups. The control input pins do not necessarily have to be pulled up in a staggered manner. For instance, if CTL2 is pulled up from the preceding group of VRs before PGOOD has been asserted at GPO1, the BUCK4 enable will be delayed until the PGOOD is asserted.

For the specific sequencing of a TPS650864 device, see Table 5-1.

8.10.5 Power-Down Sequence

The power-down sequence can follow the CTLx pins, or be controlled with the I^2C commands. If the internal PGs are used for sequencing or if some rails need to ramp down before others a delay can be added to the deassertion low of the internal enable of the subjected rail. This delay can be independent of the power-up delay option. Thus, power-up and power-down sequences can be different or similar to match the specific application sequences required.

Refer to Figure 8-25 for an example of a power-down sequence demonstrating the delay disable of BUCK1 and BUCK2.

For the specific sequencing of a TPS650864 device, see Table 5-1.

Copyright © 2022 Texas Instruments Incorporated

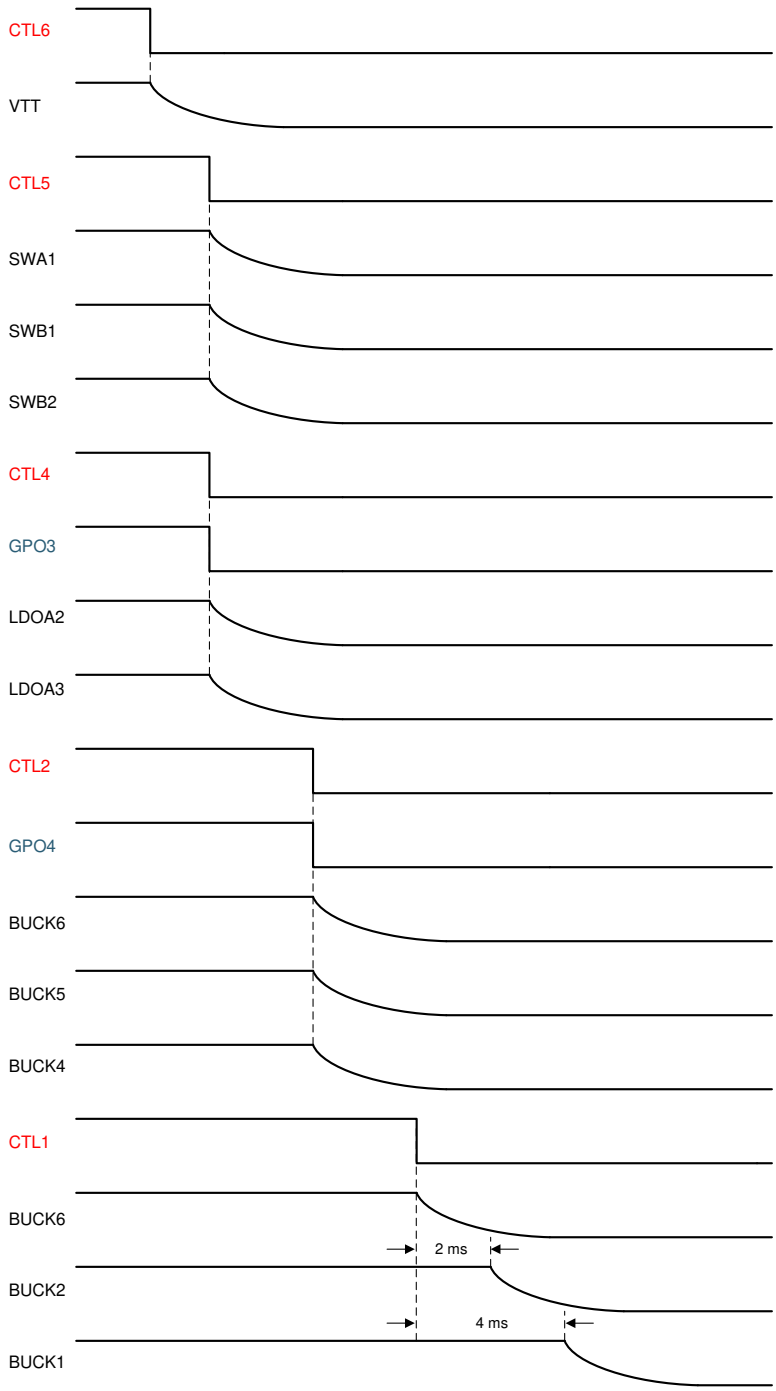

Figure 8-25. Generic Power-Down Sequence Example

Copyright © 2022 Texas Instruments Incorporated

8.10.6 Sleep State Entry and Exit

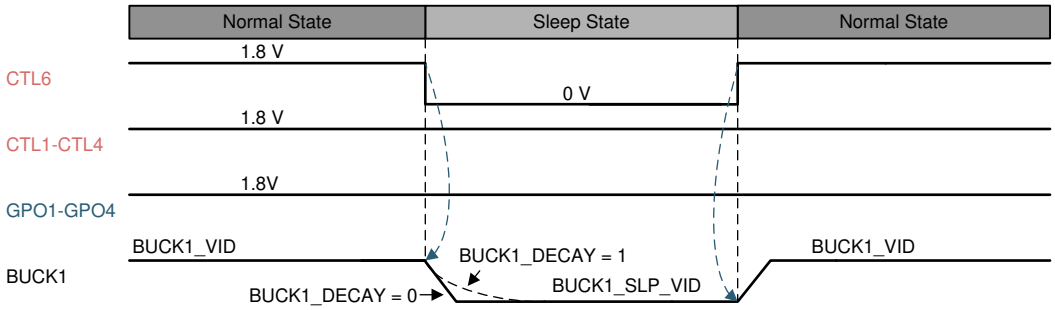

Figure 8-26. Sleep State Entry and Exit Sequence Example

Figure 8-26 shows an example where BUCK1 is defined to enter Sleep State in response to CTL6 going low.

Note

All PGOODs from GPO1–GPO4 can stay asserted during the entry and the exit. Depending on status of the BUCK1_DECAY bit defined in the BUCK1CTRL register, BUCK1 output will either decay or slew down to a new voltage defined in BUCK1_SLP_VID[6:0].

8.10.7 Emergency Shutdown

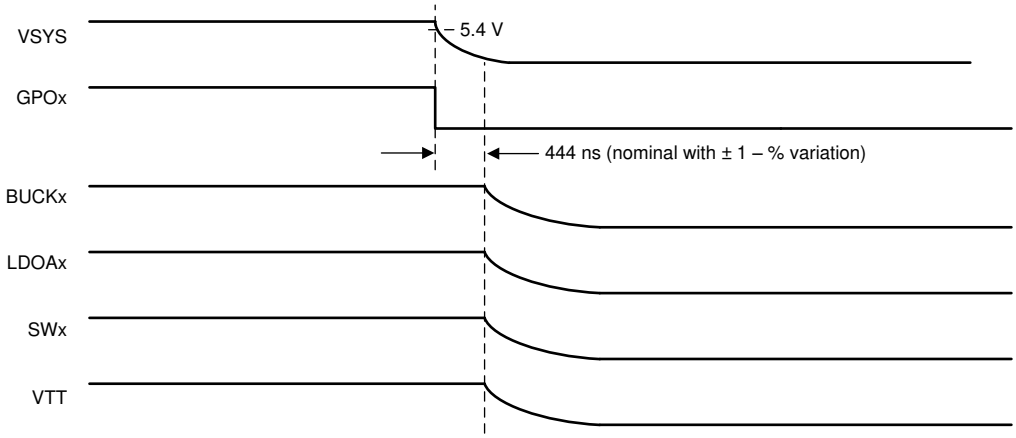

Figure 8-27. Emergency Shutdown Sequence

When V_{SYS} crosses below $V_{SYS_UVLO_5V}$, all Power Good pins will be deasserted, and after 444 ns (nominal) of delay all VRs will shut down. Upon shutdown, all internal discharge resistors are set to 100 Ω to ensure timely decay of all VR outputs. Other conditions that will cause emergency shutdown are the die temperature rising above the critical temperature threshold (T_{CRIT}), deassertion of Power Good of any rail (configurable), or failure of any rail to reach power good within 10 ms of being enabled (configurable). If PMIC was shutdown by UVLO, it will wait until VSYS rises above $V_{SYS_UVLO_5V}$ + $V_{SYS_UVLO_5V_HYS}$ before reloading the default OTP and checking the state of the CTLx pins. If PMIC was shutdown by temperature, it will wait until temperature drops below T_{CRIT} – T_{CRIT_HYS} before reloading OTP and checking the state of the CTLx pins. If the PMIC was shutdown by power fault, it will reload OTP after disabling all rails and check the state of the CTLx pins once OTP has finished reloading.

8.11 Device Functional Modes

8.11.1 Off Mode

When power supply at the VSYS pin is less than $V_{SYS_UVLO_5V}$ (5.4-V nominal) + $V_{SYS_UVLO_5V_HYS}$ (0.2-V nominal), the device is in off mode, where all output rails are disabled. If the supply voltage is greater than $V_{SYS_UVLO_3V}$ (3.6-V nominal) + $V_{SYS_UVLO_3V_HYS}$ (0.15-V nominal) while it is still less than $V_{SYS_UVLO_5V}$ + $V_{SYS_UVLO_5V_HYS}$, then the internal band-gap reference (VREF pin) along with LDO3P3 are enabled and regulated at target values.

8.11.2 Standby Mode

When power supply at the VSYS pin rises above $V_{SYS_UVLO_5V}$ + $V_{SYS_UVLO_5V_HYS}$, the device enters standby mode, where all internal reference and regulators (LDO3P3 and LDO5) are up and running, and I^2C interface and CTL pins are ready to respond. All default registers defined in Section 8.13 should have by now been loaded from one-time programmable (OTP) memory. Quiescent current consumption in standby mode is specified in Section 7.5.

8.11.3 Active Mode

The device proceeds to active mode when any output rail is enabled either through an input pin as discussed in Section 8.10 or by writing to EN bits through I^2C. Output regulation voltage can also be changed by writing to VID bits defined in Section 8.13.

8.12 I^2C Interface

The I^2C interface is a 2-wire serial interface developed by NXP™ (formerly Philips Semiconductor) (see I^2C-Bus Specification and user manual, Rev 4, 13 February 2012). The bus consists of a data line (SDA) and a clock line (SCL) with pullup structures. When the bus is idle, both SDA and SCL lines are pulled high. All the I^2C compatible devices connect to the I^2C bus through open drain I/O pins, DATA and CLK. A master device, usually a microcontroller or a digital signal processor, controls the bus. The master is responsible for generating the SCL signal and device addresses. The master also generates specific conditions that indicate the START and STOP of data transfer. A slave device receives and/or transmits data on the bus under control of the master device.

The PMIC works as a slave and supports the following data transfer modes, as defined in the I^2C-Bus Specification: standard mode (100 kbps), fast mode (400 kbps), and high-speed mode (1 Mbps). The interface adds flexibility to the power supply solution, enabling most functions to be programmed to new values depending on the instantaneous application requirements. Register contents are loaded when V_{SYS} higher than $V_{SYS_UVLO_5V}$ is applied to the PMIC. The I^2C interface is running from an internal oscillator that is automatically enabled when there is an access to the interface.

The data transfer protocol for standard and fast modes are exactly the same, therefore, they are referred to as F/S-mode in this document. The protocol for high-speed mode is different from the F/S-mode, and it is referred to as H/S-mode.

The PMIC device supports 7-bit addressing; however, 10-bit addressing and general call address are not supported. The default device address is 0x5E.

Copyright © 2022 Texas Instruments Incorporated

8.12.1 F/S-Mode Protocol

The master initiates data transfer by generating a start condition. The start condition is when a high-to-low transition occurs on the SDA line while SCL is high (see Figure 8-28). All I^{2}C-compatible devices should recognize a start condition.

The master then generates the SCL pulses, and transmits the 7-bit address and the read/write direction bit R/W on the SDA line. During all transmissions, the master ensures that data is valid. A valid data condition requires the SDA line to be stable during the entire high period of the clock pulse (see Figure 8-29). All devices recognize the address sent by the master and compare it to their internal fixed addresses. Only the slave device with a matching address generates an acknowledge (see Figure 8-30), by pulling the SDA line low during the entire high period of the ninth SCL cycle. Upon detecting this acknowledge, the master knows that the communication link with a slave has been established.

The master generates further SCL cycles to either transmit data to the slave (R/W bit = 0) or receive data from the slave (R/W bit = 1). In either case, the receiver needs to acknowledge the data sent by the transmitter. An acknowledge signal can either be generated by the master or by the slave, depending on which one is the receiver. 9-bit valid data sequences consisting of 8-bit data and 1-bit acknowledge can continue as long as necessary.

To signal the end of the data transfer, the master generates a stop condition by pulling the SDA line from low to high while the SCL line is high (see Figure 8-28). This releases the bus and stops the communication link with the addressed slave. All I^{2}C-compatible devices must recognize the stop condition. Upon the receipt of a stop condition, all devices know that the bus is released, and they wait for a start condition followed by a matching address.

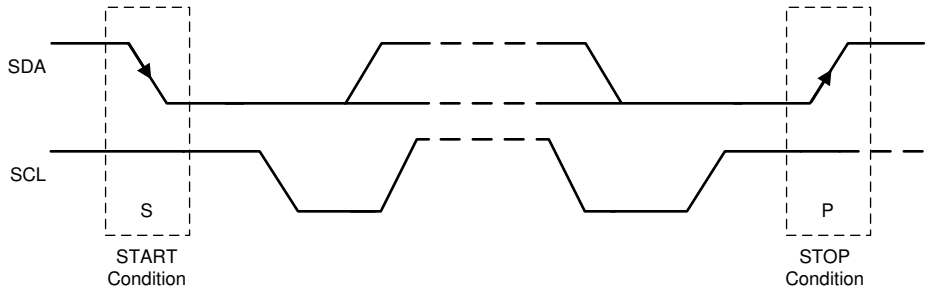

Figure 8-28. START and STOP Conditions

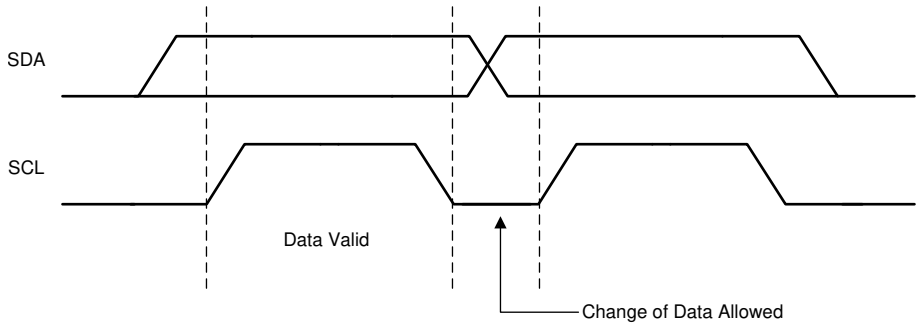

Figure 8-29. Bit Transfer on the I^{2}C Bus

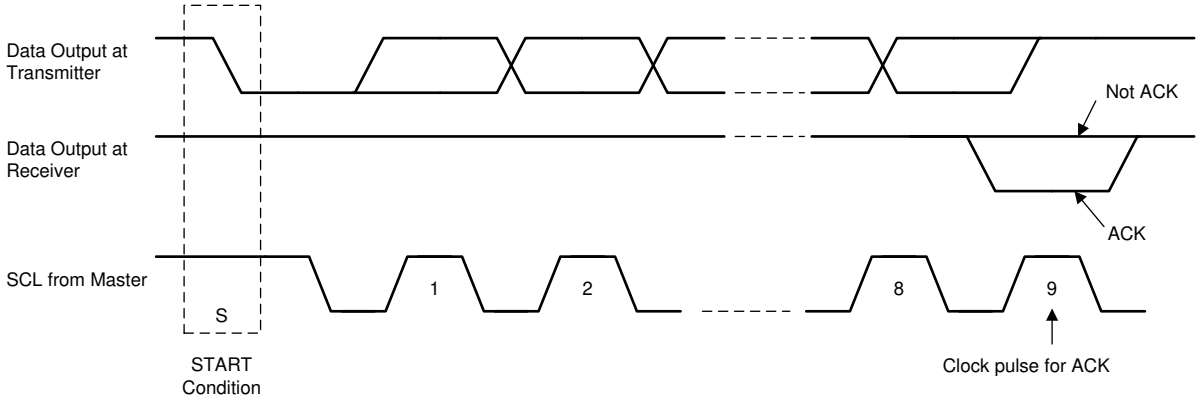

Figure 8-30. Acknowledge on the I²C Bus

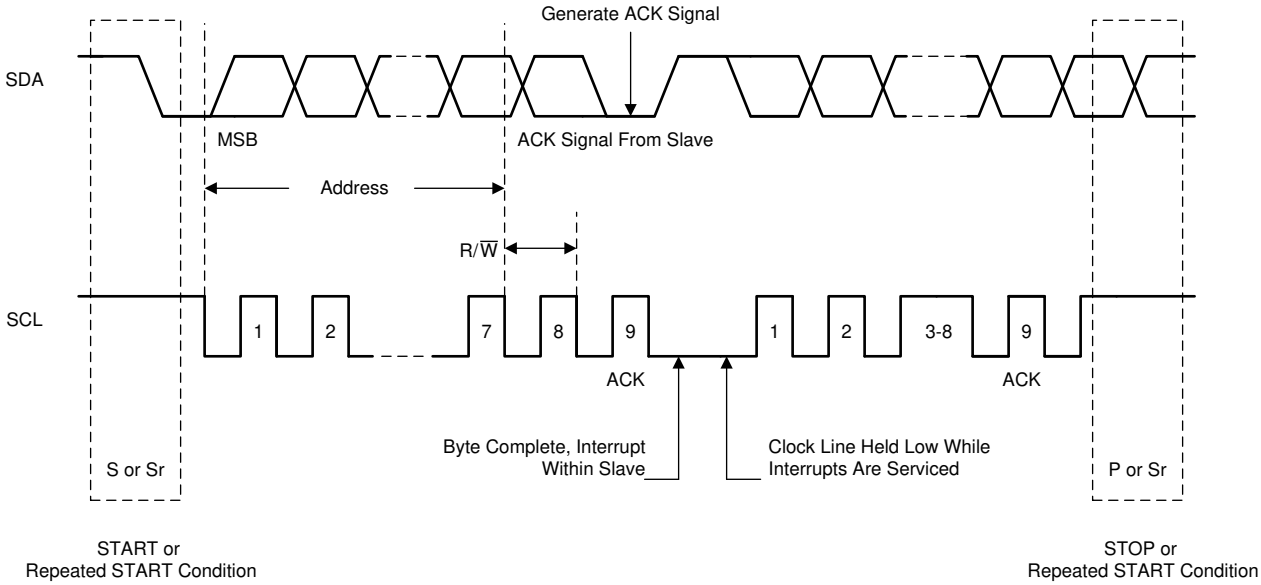

Figure 8-31. I²C Bus Protocol

Copyright © 2022 Texas Instruments Incorporated

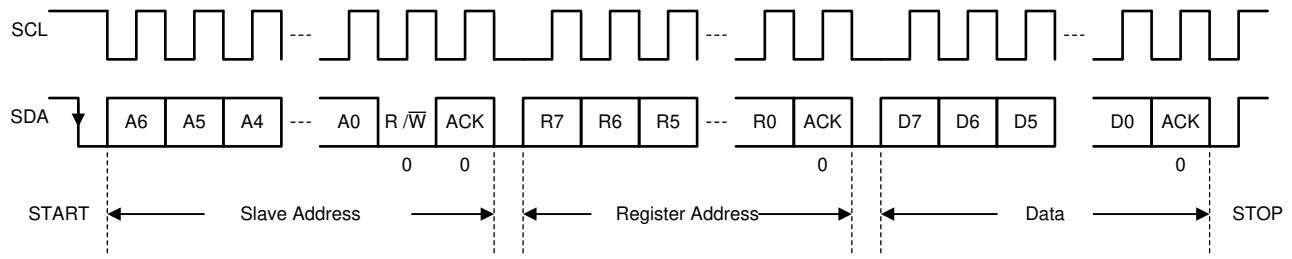

Figure 8-32. I²C Interface WRITE to TPS650864 in F/S Mode

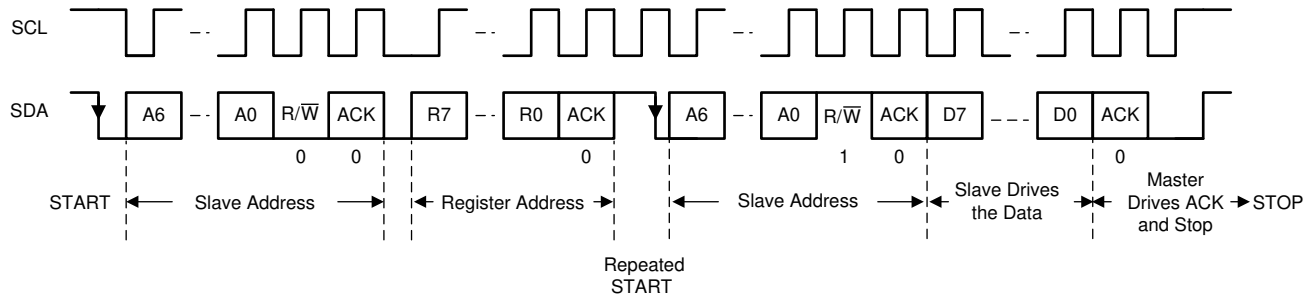

Figure 8-33. I²C Interface READ from TPS650864 in F/S Mode (Only Repeated START is Supported)

8.13 Register Maps

8.13.1 Register Map Summary

Do not attempt to write a RESERVED R/W bit to the opposite value. When the reset value of a bit register is 0bX, it means the bit value is coming from the OTP memory.

Table 8-26. Register Map Summary

Address	Name	Short Description
00h	DEVICEID1	Device ID code indicating revision
01h	DEVICEID2	Device ID code indicating revision
02h	IRQ	Interrupt statuses
03h	IRQ_MASK	Interrupt masking
04h	PMIC_STAT	PMIC temperature indicator
05h	SHUTDNSRC	Shutdown root cause indicator bits
20h	BUCK1CTRL	BUCK1 decay control and voltage select
21h	BUCK2CTRL	BUCK2 decay control and voltage select
22h	BUCK3DECAY	BUCK3 decay control
23h	BUCK3VID	BUCK3 voltage select
24h	BUCK3SLPCTRL	BUCK3 voltage select for sleep state
25h	BUCK4CTRL	BUCK4 control
26h	BUCK5CTRL	BUCK5 control
27h	BUCK6CTRL	BUCK6 control
28h	LDOA2CTRL	LDOA2 control
29h	LDOA3CTRL	LDOA3 control
40h	DISCHCTRL1	Discharge resistors for each rail control
41h	DISCHCTRL2	Discharge resistors for each rail control
42h	DISCHCTRL3	Discharge resistors for each rail control
43h	PG_DELAY1	System Power Good on GPO3 (*if GPO3 is programmed to be system PG*)
91h	FORCESHUTDN	Software force shutdown
92h	BUCK1SLPCTRL	BUCK1 voltage select for sleep state
93h	BUCK2SLPCTRL	BUCK2 voltage select for sleep state
94h	BUCK4VID	BUCK4 voltage select
95h	BUCK4SLPVID	BUCK4 voltage select for sleep state
96h	BUCK5VID	BUCK5 voltage select
97h	BUCK5SLPVID	BUCK5 voltage select for sleep state
98h	BUCK6VID	BUCK6 voltage select
99h	BUCK6SLPVID	BUCK6 voltage select for sleep state
9Ah	LDOA2VID	LDOA2 voltage select
9Bh	LDOA3VID	LDOA3 voltage select
9Ch	BUCK123CTRL	BUCK1, 2, and 3 disable and PFM/PWM mode control
9Dh	PG_DELAY2	System Power Good on GPO1, 2, and 4 (*if GPOs are programmed to be system PG*)
9Fh	SWVTT_DIS	SWs and VTT I^2C disable bits
A0h	I2C_RAIL_EN1	I^2C Enable control of individual rails
A1h	I2C_RAIL_EN2/GPOCTRL	I^2C Enable control of individual rails and I^2C controlled GPOs, high or low
A2h	PWR_FAULT_MASK1	Power fault masking for individual rails
A3h	PWR_FAULT_MASK2	Power fault masking for individual rails
A4h	GPO1PG_CTRL1	Power good tree control for GPO1
A5h	GPO1PG_CTRL2	Power good tree control for GPO1
A6h	GPO4PG_CTRL1	Power good tree control for GPO4

Copyright © 2022 Texas Instruments Incorporated

Table 8-26. Register Map Summary (continued)

Address	Name	Short Description
A7h	GPO4PG_CTRL2	Power good tree control for GPO4
A8h	GPO2PG_CTRL1	Power good tree control for GPO2
A9h	GPO2PG_CTRL2	Power good tree control for GPO2
AAh	GPO3PG_CTRL1	Power good tree control for GPO3
ABh	GPO3PG_CTRL2	Power good tree control for GPO3
ACh	MISCSYSPG	Power good tree control with CTL3 and CTL6 for GPO
ADh	VTT_DISCH_CTRL	Discharge resistor setting for VTT LDO
AEh	LDOA1_SWB2_CTRL	LDOA1 and SWB2 control for discharge, voltage selection, and enable
B0h	PG_STATUS1	Power good statuses for individual rails
B1h	PG_STATUS2	Power good statuses for individual rails
B2h	PWR_FAULT_STATUS1	Power fault statuses for individual rails
B3h	PWR_FAULT_STATUS2	Power fault statuses for individual rails
B4h	TEMPCRIT	Critical temperature indicators
B5h	TEMPHOT	Hot temperature indicators

Complex bit access types are encoded to fit into small table cells. Table 8-27 shows the codes that are used for access types in this section.

Table 8-27. Access Type Codes

Access Type	Code	Description
Read Type		
R	R	Read
Write Type		
W	W	Write

8.13.2 DEVICEID1: 1st PMIC Device and Revision ID Register (offset = 00h) [reset = X]

Figure 8-34. DEVICEID1 Register

Bit	7	6	5	4	3	2	1	0
Bit Name	PART_ NUMBER[7]	PART_ NUMBER[6]	PART_ NUMBER[5]	PART_ NUMBER[4]	PART_ NUMBER[3]	PART_ NUMBER[2]	PART_ NUMBER[1]	PART_ NUMBER[0]
TPS6508640	0	0	0	0	0	0	0	0
TPS65086401	0	0	0	0	0	0	0	1
TPS6508641	0	0	0	1	0	0	0	0
TPS65086470	0	1	1	1	0	0	0	0
Access	R	R	R	R	R	R	R	R

Table 8-28. DEVICEID1 Register Descriptions

Bit	Field	Type	Reset	Description
7:4	PART_NUMBER[7:4]	R	X	Device part number ID **0000**: TPS65086x**0**x **0001**: TPS65086x**1**x ... **1111**: TPS65086x**F**x
3:0	PART_NUMBER[3:0]	R	X	Device part number ID **0000**: TPS65086xx**0** **0001**: TPS65086xx**1** ... **1111**: TPS65086xx**F**

8.13.3 DEVICEID2: 2nd PMIC Device and Revision ID Register (offset = 01h) [reset = X]

Figure 8-35. DEVICEID2 Register

Bit	7	6	5	4	3	2	1	0
Bit Name	REVID[1]	REVID[0]	OTP_ VERSION[1]	OTP_ VERSION[0]	PART_ NUMBER[11]	PART_ NUMBER[10]	PART_ NUMBER[9]	PART_ NUMBER[8]
TPS6508640	0	0	1	0	0	1	0	0
TPS65086401	0	0	0	1	0	1	0	0
TPS6508641	0	0	1	0	0	1	0	0
TPS65086470	0	0	0	1	0	1	0	0
Access	R	R	R	R	R	R	R	R

Table 8-29. DEVICEID2 Register Descriptions

Bit	Field	Type	Reset	Description
7:6	REVID[1:0]	R	X	Silicon revision ID
5:4	OTP_VERSION[1:0]	R	X	OTP variation ID **00**: A **01**: B **10**: C **11**: D
3:0	PART_NUMBER[11:8]	R	X	Device part number ID **0100**: TPS650864xx

Copyright © 2022 Texas Instruments Incorporated

8.13.4 IRQ: PMIC Interrupt Register (offset = 02h) [reset = 0000 0000]

Figure 8-36. IRQ Register

Bit	7	6	5	4	3	2	1	0
Bit Name	FAULT	RESERVED	RESERVED	RESERVED	SHUTDN	RESERVED	RESERVED	DIETEMP
TPS650864	0	0	0	0	0	0	0	0
Access	R/W	R	R	R	R/W	R	R	R/W

Table 8-30. IRQ Register Descriptions

Bit	Field	Type	Reset	Description
7	FAULT	R/W	0	Fault interrupt. Asserted when either condition occurs: power fault of any rail, or die temperature crosses over the critical temperature threshold (T_{CRIT}). The user can read ***Reg. 0xB2–0xB6*** to determine what has caused the interrupt. **0**: Not asserted **1**: Asserted. Host to write 1b to clear.
3	SHUTDN	R/W	0	Asserted when PMIC shuts down. To clear indicator, SHUTDNSRC must be cleared first, see Section 8.13.7 **0**: Not asserted. **1**: Asserted. Host to write 1b to clear.
0	DIETEMP	R/W	0	Die temp interrupt. Asserted when PMIC die temperature crosses above the hot temperature threshold (T_{HOT}). **0**: Not asserted. **1**: Asserted. Host to write 1b to clear.

8.13.5 IRQ_MASK: PMIC Interrupt Mask Register (offset = 03h) [reset = 1111 1111]

Figure 8-37. IRQ_MASK Register

Bit	7	6	5	4	3	2	1	0
Bit Name	MFAULT	RESERVED	RESERVED	RESERVED	msHUTDN	RESERVED	RESERVED	MDIETEMP
TPS650864	1	1	1	1	1	1	1	1
Access	R/W	R	R	R	R/W	R	R	R/W

Table 8-31. IRQ_MASK Register Descriptions

Bit	Field	Type	Reset	Description
7	MFAULT	R/W	1	FAULT interrupt mask. **0**: Not masked. **1**: Masked.
3	msHUTDN	R/W	1	PMIC shutdown event interrupt mask **0**: Not masked. **1**: Masked.
0	MDIETEMP	R/W	1	Die temp interrupt mask. **0**: Not masked. **1**: Masked.

Copyright © 2022 Texas Instruments Incorporated

8.13.6 PMICSTAT: PMIC Status Register (offset = 04h) [reset = 0000 0000]

Figure 8-38. PMICSTAT Register

Bit	7	6	5	4	3	2	1	0
Bit Name	RESERVED	RESERVED	RESERVED	RESERVED	RESERVED	RESERVED	RESERVED	SDIETEMP
TPS650864	0	0	0	0	0	0	0	0
Access	R	R	R	R	R	R	R	R

Table 8-32. PMICSTAT Register Descriptions

Bit	Field	Type	Reset	Description
0	SDIETEMP	R	0	PMIC die temperature status. **0**: PMIC die temperature is below T_{HOT}. **1**: PMIC die temperature is above T_{HOT}.

8.13.7 SHUTDNSRC: PMIC Shut-Down Event Register (offset = 05h) [reset = 0000 0000]

Figure 8-39. SHUTDNSRC Register

Bit	7	6	5	4	3	2	1	0
Bit Name	RESERVED	RESERVED	RESERVED	RESERVED	COLDOFF	UVLO	PWR_FAULT	CRITTEMP
TPS650864	0	0	0	0	0	0	0	0
Access	R	R	R	R	R/W	R/W	R/W	R/W

Table 8-33. SHUTDNSRC Register Descriptions

Bit	Field	Type	Reset	Description
3	COLDOFF	R/W	0	Set by PMIC cleared by host. Host to write 1b to clear. **0**: Cleared **1**: N/A. Not enabled for existing OTPs.
2	UVLO	R/W	0	Set by PMIC cleared by host. Host to write 1b to clear. **0**: Cleared **1**: PMIC was shut down due to a UVLO event (V_{SYS} crosses below 5.4 V). Assertion of this bit sets the SHUTDN bit in Section 8.13.4.
1	PWR_FAULT	R/W	0	Set by PMIC cleared by host. Host to write 1b to clear. **0**: Cleared **1**: PMIC was shut down due to an unmasked power fault event. Assertion of this bit sets the SHUTDN bit in Section 8.13.4. The source of the power fault can be determined from the PWR_FAULT registers (0xB2 and 0xB3). Overcurrent protection will limit I_{OUT} and typically cause a power fault as V_{OUT} droops.
0	CRITTEMP	R/W	0	Set by PMIC cleared by host. Host to write 1b to clear. **0**: Cleared **1**: PMIC was shut down due to the rise of PMIC die temperature above critical temperature threshold (T_{CRIT}). Assertion of this bit sets the SHUTDN bit in Section 8.13.4.

Copyright © 2022 Texas Instruments Incorporated

8.13.8 BUCK1CTRL: BUCK1 Control Register (offset = 20h) [reset = X]

Figure 8-40. BUCK1CTRL Register

Bit	7	6	5	4	3	2	1	0
Bit Name	BUCK1_ VID[6]	BUCK1_ VID[5]	BUCK1_ VID[4]	BUCK1_ VID[3]	BUCK1_ VID[2]	BUCK1_ VID[1]	BUCK1_ VID[0]	BUCK1_ DECAY
TPS6508640	1	1	1	0	1	0	0	0
TPS65086401	0	1	1	1	0	0	0	0
TPS6508641	0	0	0	0	0	0	1	0
TPS65086470	0	1	1	1	1	0	0	0
Access	R/W	R/W	R/W	R/W	R/W	R/W	R/W	R/W

Table 8-34. BUCK1CTRL Register Descriptions

Bit	Field	Type	Reset	Description
7:1	BUCK1_VID[6:0]	R/W	X	This field sets the BUCK1 regulator output regulation voltage in normal mode. See Table 8-22 and Table 8-23 for 10-mV and 25-mV step ranges for V_{OUT} options.
0	BUCK1_DECAY	R/W	X	Decay Bit **0**: The output slews down to a lower voltage set by the VID bits. **1**: The output decays down to a lower voltage set by the VID bits. Decay rate depends on total capacitance and load present at the output.

8.13.9 BUCK2CTRL: BUCK2 Control Register (offset = 21h) [reset = X]

Figure 8-41. BUCK2CTRL Register

Bit	7	6	5	4	3	2	1	0
Bit Name	BUCK2_ VID[6]	BUCK2_ VID[5]	BUCK2_ VID[4]	BUCK2_ VID[3]	BUCK2_ VID[2]	BUCK2_ VID[1]	BUCK2_ VID[0]	BUCK2_ DECAY
TPS6508640	0	1	1	0	0	1	0	0
TPS65086401	0	1	0	1	1	0	1	0
TPS6508641	0	1	0	1	1	0	1	0
TPS65086470	0	1	1	1	0	0	0	0
Access	R/W	R/W	R/W	R/W	R/W	R/W	R/W	R/W

Table 8-35. BUCK2CTRL Register Descriptions

Bit	Field	Type	Reset	Description
7:1	BUCK2_VID[6:0]	R/W	X	This field sets the BUCK2 regulator output regulation voltage in normal mode. See Table 8-22 and Table 8-23 for 10-mV and 25-mV step ranges for V_{OUT} options.
0	BUCK2_DECAY	R/W	X	Decay Bit **0**: The output slews down to a lower voltage set by the VID bits. **1**: The output decays down to a lower voltage set by the VID bits. Decay rate depends on total capacitance and load present at the output.

Copyright © 2022 Texas Instruments Incorporated

8.13.10 BUCK3DECAY: BUCK3 Decay Control Register (offset = 22h) [reset = X]

Figure 8-42. BUCK3DECAY Register

Bit	7	6	5	4	3	2	1	0
Bit Name	SPARE	SPARE	SPARE	SPARE	SPARE	SPARE	SPARE	BUCK3_ DECAY
TPS6508640	0	1	0	0	0	0	0	0
TPS65086401	0	0	1	0	0	1	0	0
TPS6508641	0	0	1	1	1	0	0	0
TPS65086470	0	1	0	0	0	0	0	0
Access	R/W	R/W	R/W	R/W	R/W	R/W	R/W	R/W

Table 8-36. BUCK3DECAY Register Descriptions

Bit	Field	Type	Reset	Description
7:1	SPARE	R/W	X	Unused. Typically mirror BUCK3_VID by default in OTP.
0	BUCK3_DECAY	R/W	X	Decay Bit **0**: The output slews down to a lower voltage set by the VID bits. **1**: The output decays down to a lower voltage set by the VID bits. Decay rate depends on total capacitance and load present at the output.

8.13.11 BUCK3VID: BUCK3 VID Register (offset = 23h) [reset = X]

Figure 8-43. BUCK3VID Register

Bit	7	6	5	4	3	2	1	0
Bit Name	BUCK3_ VID[6]	BUCK3_ VID[5]	BUCK3_ VID[4]	BUCK3_ VID[3]	BUCK3_ VID[2]	BUCK3_ VID[1]	BUCK3_ VID[0]	RESERVED
TPS6508640	0	1	0	0	0	0	0	0
TPS65086401	0	0	1	0	0	1	0	0
TPS6508641	0	0	1	1	1	0	0	0
TPS65086470	0	1	0	0	0	0	0	0
Access	R/W	R/W	R/W	R/W	R/W	R/W	R/W	R

Table 8-37. BUCK3VID Register Descriptions

Bit	Field	Type	Reset	Description
7:1	BUCK3_VID[6:0]	R/W	X	This field sets the BUCK3 regulator output regulation voltage in normal mode. See Table 8-22 and Table 8-23 for 10-mV and 25-mV step ranges for V_{OUT} options.

Copyright © 2022 Texas Instruments Incorporated

8.13.12 BUCK3SLPCTRL: BUCK3 Sleep Control VID Register (offset = 24h) [reset = X]

Figure 8-44. BUCK3SLPCTRL Register

Bit	7	6	5	4	3	2	1	0
Bit Name	BUCK3_SLP _ VID[6]	BUCK3_SLP _ VID[5]	BUCK3_SLP _ VID[4]	BUCK3_SLP _ VID[3]	BUCK3_SLP _ VID[2]	BUCK3_SLP _ VID[1]	BUCK3_SLP _ VID[0]	BUCK3_SLP _ EN
TPS6508640	0	1	0	0	0	0	0	0
TPS65086401	0	0	1	0	0	1	0	0
TPS6508641	0	1	0	0	0	0	0	1
TPS65086470	0	1	0	0	0	0	0	0
Access	R/W	R/W	R/W	R/W	R/W	R/W	R/W	R/W

Table 8-38. BUCK3SLPCTRL Register Descriptions

Bit	Field	Type	Reset	Description
7:1	BUCK3_SLP_VID[6:0]	R/W	X	This field sets the BUCK3 regulator output regulation voltage in sleep mode if BUCK3_SLP_EN = 1b. See Table 8-22 and Table 8-23 for 10-mV and 25-mV step ranges for V_{OUT} options.
0	BUCK3_SLP_EN	R/W	X	BUCK3 sleep mode enable. BUCK3 is factory configured to switch to sleep mode voltage either by CTL3/SLPENB1 pin or by CTL6/SLPENB2 pin. **0**: Disable. Uses BUCK3_VID in all cases. **1**: Enabled. Uses BUCK3_SLP_VID when assigned sleep pin is low.

8.13.13 BUCK4CTRL: BUCK4 Control Register (offset = 25h) [reset = X]

Figure 8-45. BUCK4CTRL Register

Bit	7	6	5	4	3	2	1	0
Bit Name	RESERVED	RESERVED	BUCK4_SLP _ EN[1]	BUCK4_SLP _ EN[0]	RESERVED	RESERVED	BUCK4_ MODE	BUCK4_DIS
TPS6508640	0	0	0	0	1	1	1	1
TPS65086401	0	0	1	1	1	1	1	1
TPS6508641	0	0	0	0	1	1	1	1
TPS65086470	0	0	0	0	1	1	1	1
Access	R	R	R/W	R/W	R/W	R/W	R/W	R/W

Table 8-39. BUCK4CTRL Register Descriptions

Bit	Field	Type	Reset	Description
5:4	BUCK4_SLP_EN	R/W	X	BUCK4 sleep mode enable. BUCK4 is factory configured to switch to sleep mode voltage either by CTL3/SLPENB1 pin or by CTL6/SLPENB2 pin. **00**: Disable. Uses BUCK4_VID in all cases. **11**: Enabled. Uses BUCK4_SLP_VID when assigned sleep pin is low. **01,10**: Reserved. Do not write these values.
3:2	RESERVED	R/W	11	Reserved bits. Always write to 11.
1	BUCK4_MODE	R/W	X	This field sets the BUCK4 regulator operating mode. **0**: Automatic mode **1**: Forced PWM mode
0	BUCK4_DIS	R/W	X	BUCK4 Disable Bit. Writing 0 to this bit forces BUCK4 to turn off regardless of any control input pin (CTL1–CTL6) status. **0**: Disable **1**: Enable

Copyright © 2022 Texas Instruments Incorporated

8.13.14 BUCK5CTRL: BUCK5 Control Register (offset = 26h) [reset = X]

Figure 8-46. BUCK5CTRL Register

Bit	7	6	5	4	3	2	1	0
Bit Name	RESERVED	RESERVED	BUCK5_SLP _EN[1]	BUCK5_SLP _EN[0]	RESERVED	RESERVED	BUCK5_ MODE	BUCK5_DIS
TPS6508640	0	0	0	0	1	1	1	1
TPS65086401	0	0	0	0	1	1	1	1
TPS6508641	0	0	0	0	1	1	1	1
TPS65086470	0	0	0	0	1	1	1	1
Access	R	R	R/W	R/W	R/W	R/W	R/W	R/W

Table 8-40. BUCK5CTRL Register Descriptions

Bit	Field	Type	Reset	Description
5:4	BUCK5_SLP_EN	R/W	X	BUCK5 sleep mode enable. BUCK5 is factory configured to switch to sleep mode voltage either by CTL3/SLPENB1 pin or by CTL6/SLPENB2 pin. **00**: Disable. Uses BUCK5_VID in all cases. **11**: Enabled. Uses BUCK5_SLP_VID when assigned sleep pin is low. **01,10**: Reserved. Do not write these values.
3:2	RESERVED	R/W	11	Reserved bits. Always write to 11.
1	BUCK5_MODE	R/W	X	This field sets the BUCK5 regulator operating mode. **0**: Automatic mode **1**: Forced PWM mode
0	BUCK5_DIS	R/W	X	BUCK5 Disable Bit. Writing 0 to this bit forces BUCK5 to turn off regardless of any control input pin (CTL1–CTL6) status. **0**: Disable. **1**: Enable.

8.13.15 BUCK6CTRL: BUCK6 Control Register (offset = 27h) [reset = X]

Figure 8-47. BUCK6CTRL Register

Bit	7	6	5	4	3	2	1	0
Bit Name	RESERVED	RESERVED	BUCK6_SLP EN[1]	BUCK6_SLP EN[0]	RESERVED	RESERVED	BUCK6_ MODE	BUCK6_DIS
TPS6508640	0	0	0	0	1	1	0	1
TPS65086401	0	0	1	1	1	1	0	1
TPS6508641	0	0	0	0	1	1	1	1
TPS65086470	0	0	1	1	1	1	0	1
Access	R	R	R/W	R/W	R/W	R/W	R/W	R/W

Table 8-41. BUCK6CTRL Register Descriptions

Bit	Field	Type	Reset	Description
5:4	BUCK6_SLP_EN	R/W	X	BUCK6 sleep mode enable. BUCK6 is factory configured to switch to sleep mode voltage either by CTL3/SLPENB1 pin or by CTL6/SLPENB2 pin. **00**: Disable. Uses BUCK6_VID in all cases. **11**: Enabled. Uses BUCK6_SLP_VID when assigned sleep pin is low. **01,10**: Reserved. Do not write these values.
3:2	RESERVED	R/W	11	Reserved bits. Always write to 11.
1	BUCK6_MODE	R/W	X	This field sets the BUCK6 regulator operating mode. **0**: Automatic mode **1**: Forced PWM mode

Copyright © 2022 Texas Instruments Incorporated

Table 8-41. BUCK6CTRL Register Descriptions (continued)

Bit	Field	Type	Reset	Description
0	BUCK6_DIS	R/W	X	BUCK6 Disable Bit. Writing 0 to this bit forces BUCK6 to turn off regardless of any control input pin (CTL1–CTL6) status. **0**: Disable. **1**: Enable.

8.13.16 LDOA2CTRL: LDOA2 Control Register (offset = 28h) [reset = X]

Figure 8-48. LDOA2CTRL Register

Bit	7	6	5	4	3	2	1	0
Bit Name	RESERVED	RESERVED	LDOA2_SLP _EN[1]	LDOA2_SLP _EN[0]	RESERVED	RESERVED	RESERVED	LDOA2_DIS
TPS6508640	0	0	0	0	1	1	0	0
TPS65086401	0	0	0	0	1	1	0	1
TPS6508641	0	0	0	0	1	1	0	1
TPS65086470	0	0	0	0	1	1	0	0
Access	R	R	R/W	R/W	R/W	R/W	R/W	R/W

Table 8-42. LDOA2CTRL Register Descriptions

Bit	Field	Type	Reset	Description
5:4	LDOA2_SLP_EN	R/W	X	LDOA2 sleep mode enable. LDOA2 is factory configured to switch to sleep mode voltage either by CTL3/SLPENB1 pin or by CTL6/SLPENB2 pin. **00**: Disable. Uses LDOA2_VID in all cases. **11**: Enabled. Uses LDOA2_SLP_VID when assigned sleep pin is low. **01,10**: Reserved. Do not write these values.
3:1	RESERVED	R/W	110	Reserved bits. Always write to '110'.
0	LDOA2_DIS	R/W	X	LDOA2 Disable Bit. Writing 0 to this bit forces LDOA2 to turn off regardless of any control input pin (CTL1–CTL6) status. **0**: Disable. **1**: Enable.

8.13.17 LDOA3CTRL: LDOA3 Control Register (offset = 29h) [reset = X]

Figure 8-49. LDOA3CTRL Register

Bit	7	6	5	4	3	2	1	0
Bit Name	RESERVED	RESERVED	LDOA3_SLP _EN[1]	LDOA3_SLP _EN[0]	RESERVED	RESERVED	RESERVED	LDOA3_DIS
TPS6508640	0	0	0	0	1	1	0	0
TPS65086401	0	0	0	0	1	1	0	1
TPS6508641	0	0	0	0	1	1	0	1
TPS65086470	0	0	0	0	1	1	0	0
Access	R	R	R/W	R/W	R/W	R/W	R/W	R/W

Table 8-43. LDOA3CTRL Register Descriptions

Bit	Field	Type	Reset	Description
5:4	LDOA3_SLP_EN	R/W	X	LDOA3 sleep mode enable. LDOA3 is factory configured to switch to sleep mode voltage either by CTL3/SLPENB1 pin or by CTL6/SLPENB2 pin. **00**: Disable. Uses LDOA3_VID in all cases. **11**: Enabled. Uses LDOA3_SLP_VID when assigned sleep pin is low. **01,10**: Reserved. Do not write these values.
3:1	RESERVED	R/W	110	Reserved bits. Always write to '110'.

Table 8-43. LDOA3CTRL Register Descriptions (continued)

Bit	Field	Type	Reset	Description
0	LDOA3_DIS	R/W	X	LDOA3 Disable Bit. Writing 0 to this bit forces LDOA3 to turn off regardless of any control input pin (CTL1–CTL6) status. **0**: Disable **1**: Enable

Copyright © 2022 Texas Instruments Incorporated

8.13.18 DISCHCTRL1: 1st Discharge Control Register (offset = 40h) [reset = X]

All xx_DISCHG[1:0] bits internally set to 00 whenever the corresponding VR is enabled.

Figure 8-50. DISCHCTRL1 Register

Bit	7	6	5	4	3	2	1	0
Bit Name	BUCK4_ DISCHG[1]	BUCK4_ DISCHG[0]	BUCK3_ DISCHG[1]	BUCK3_ DISCHG[0]	BUCK2_ DISCHG[1]	BUCK2_ DISCHG[0]	BUCK1_ DISCHG[1]	BUCK1_ DISCHG[0]
TPS6508640	0	1	0	1	0	1	0	1
TPS65086401	0	1	0	1	0	1	0	1
TPS6508641	0	1	0	1	0	1	0	1
TPS65086470	0	1	0	1	0	1	0	1
Access	R/W	R/W	R/W	R/W	R/W	R/W	R/W	R/W

Table 8-44. DISCHCTRL1 Register Descriptions

Bit	Field	Type	Reset	Description
7:6	BUCK4_DISCHG[1:0]	R/W	X	BUCK4 discharge resistance **00**: no discharge **01**: 100 Ω **10**: 200 Ω **11**: 500 Ω
5:4	BUCK3_DISCHG[1:0]	R/W	X	BUCK3 discharge resistance **00**: no discharge **01**: 100 Ω **10**: 200 Ω **11**: 500 Ω
3:2	BUCK2_DISCHG[1:0]	R/W	X	BUCK2 discharge resistance **00**: no discharge **01**: 100 Ω **10**: 200 Ω **11**: 500 Ω
1:0	BUCK1_DISCHG[1:0]	R/W	X	BUCK1 discharge resistance **00**: no discharge **01**: 100 Ω **10**: 200 Ω **11**: 500 Ω

Copyright © 2022 Texas Instruments Incorporated

8.13.19 DISCHCTRL2: 2nd Discharge Control Register (offset = 41h) [reset = X]

All xx_DISCHG[1:0] bits internally set to 00 whenever the corresponding VR is enabled.

Figure 8-51. DISCHCTRL2 Register

Bit	7	6	5	4	3	2	1	0
Bit Name	LDOA2_ DISCHG[1]	LDOA2_ DISCHG[0]	SWA1_ DISCHG[1]	SWA1_ DISCHG[0]	BUCK6_ DISCHG[1]	BUCK6_ DISCHG[0]	BUCK5_ DISCHG[1]	BUCK5_ DISCHG[0]
TPS6508640	0	1	0	1	0	1	0	1
TPS65086401	0	1	0	1	0	1	0	1
TPS6508641	0	1	0	1	0	1	0	1
TPS65086470	0	1	0	0	0	1	0	1
Access	R/W	R/W	R/W	R/W	R/W	R/W	R/W	R/W

Table 8-45. DISCHCTRL2 Register Descriptions

Bit	Field	Type	Reset	Description
7:6	LDOA2_DISCHG[1:0]	R/W	X	LDOA2 discharge resistance **00**: no discharge **01**: 100 Ω **10**: 200 Ω **11**: 500 Ω
5:4	SWA1_DISCHG[1:0]	R/W	X	SWA1 discharge resistance **00**: no discharge **01**: 100 Ω **10**: 200 Ω **11**: 500 Ω
3:2	BUCK6_DISCHG[1:0]	R/W	X	BUCK6 discharge resistance **00**: no discharge **01**: 100 Ω **10**: 200 Ω **11**: 500 Ω
1:0	BUCK5_DISCHG[1:0]	R/W	X	BUCK5 discharge resistance **00**: no discharge **01**: 100 Ω **10**: 200 Ω **11**: 500 Ω

Copyright © 2022 Texas Instruments Incorporated

8.13.20 DISCHCTRL3: 3rd Discharge Control Register (offset = 42h) [reset = X]

All xx_DISCHG[1:0] bits internally set to 00 whenever the corresponding VR is enabled.

Figure 8-52. DISCHCTRL3 Register

Bit	7	6	5	4	3	2	1	0
Bit Name	RESERVED	RESERVED	SWB2_ DISCHG[1]	SWB2_ DISCHG[0]	SWB1_ DISCHG[1]	SWB1_ DISCHG[0]	LDOA3_ DISCHG[1]	LDOA3_ DISCHG[0]
TPS6508640	0	0	0	1	0	1	0	1
TPS65086401	0	0	0	1	0	1	0	1
TPS6508641	0	0	0	1	0	1	0	1
TPS65086470	0	0	0	0	0	0	0	1
Access	R	R	R/W	R/W	R/W	R/W	R/W	R/W

Table 8-46. DISCHCTRL3 Register Descriptions

Bit	Field	Type	Reset	Description
5:4	SWB2_DISCHG[1:0]	R/W	X	SWB2 discharge resistance **00**: no discharge **01**: 100 Ω **10**: 200 Ω **11**: 500 Ω
3:2	SWB1_DISCHG[1:0]	R/W	X	SWB1 discharge resistance **00**: no discharge **01**: 100 Ω **10**: 200 Ω **11**: 500 Ω
1:0	LDOA3_DISCHG[1:0]	R/W	X	LDOA3 discharge resistance **00**: no discharge **01**: 100 Ω **10**: 200 Ω **11**: 500 Ω

8.13.21 PG_DELAY1: 1st Power Good Delay Register (offset = 43h) [reset = X]

Programmable Power Good delay for GPO3 pin, measured from the moment when all VRs assigned to GPO3 pin reach their regulation range to Power Good assertion. This is an optional register as the PMIC can be programmed for system PG, level shifter or I^2C controller GPO.

Figure 8-53. PG_DELAY1 Register

Bit	7	6	5	4	3	2	1	0
Bit Name	RESERVED	RESERVED	RESERVED	RESERVED	RESERVED	GPO3_PG_ DELAY[2]	GPO3_PG_ DELAY[1]	GPO3_PG_ DELAY[0]
TPS6508640	0	0	0	0	0	1	1	0
TPS65086401	0	0	0	0	0	0	0	1
TPS6508641	0	0	0	0	0	1	0	1
TPS65086470	0	0	0	0	0	—	—	—
Access	R	R	R	R	R	R/W	R/W	R/W

Copyright © 2022 Texas Instruments Incorporated

Table 8-47. PG_DELAY1 Register Descriptions

Bit	Field	Type	Reset	Description
2:0	GPO3_PG_DELAY[2:0]	R/W	X	Programmable delay Power Good or level shifter for GPO3 pin. Measured from the moment when all rails grouped to this pin reach their regulation range. All values have ±10% variation. **000**: 2.5 ms **001**: 5.0 ms **010**: 10 ms **011**: 15 ms **100**: 20 ms **101**: 50 ms **110**: 75 ms **111**: 100 ms **—**: Bits not used. If GPO3 is controlled by I^2C rather than PG and is not used internally for VTT LDO enable, these bits have no impact. Default is set to 0b.

Copyright © 2022 Texas Instruments Incorporated

8.13.22 FORCESHUTDN: Force Emergency Shutdown Control Register (offset = 91h) [reset = 0000 0000]

Figure 8-54. FORCESHUTDN Register

Bit	7	6	5	4	3	2	1	0
Bit Name	RESERVED	RESERVED	RESERVED	RESERVED	RESERVED	RESERVED	RESERVED	SDWN
TPS650864	0	0	0	0	0	0	0	0
Access	R	R	R	R	R	R	R	R/W

Table 8-48. FORCESHUTDN Register Descriptions

Bit	Field	Type	Reset	Description
0	SDWN	R/W	0	Forces reset of the PMIC and reset of all registers. The bit is self-clearing. PMIC does not generate I^2C ACK for this command because it goes into emergency shutdown. **0**: No action. **1**: PMIC initiates emergency shutdown.

8.13.23 BUCK1SLPCTRL: BUCK1 Sleep Control Register (offset = 92h) [reset = X]

Figure 8-55. BUCK1SLPCTRL Register

Bit	7	6	5	4	3	2	1	0
Bit Name	BUCK1_ SLP_ VID[6]	BUCK1_ SLP_ VID[5]	BUCK1_ SLP_ VID[4]	BUCK1_ SLP_ VID[3]	BUCK1_ SLP_ VID[2]	BUCK1_ SLP_ VID[1]	BUCK1_ SLP_ VID[0]	BUCK1_ SLP_ EN
TPS6508640	1	1	1	0	1	0	0	0
TPS65086401	0	1	1	1	0	0	0	0
TPS6508641	0	0	0	0	0	0	1	0
TPS65086470	0	1	1	1	1	0	0	0
Access	R/W	R/W	R/W	R/W	R/W	R/W	R/W	R/W

Table 8-49. BUCK1SLPCTRL Register Descriptions

Bit	Field	Type	Reset	Description
7:1	BUCK1_SLP_VID[6:0]	R/W	X	This field sets the BUCK1 regulator output regulation voltage in sleep mode. See Table 8-22 and Table 8-23 for 10-mV and 25-mV step ranges for V_{OUT} options.
0	BUCK1_SLP_EN	R/W	X	BUCK1 sleep mode enable. BUCK1 is factory configured to switch to sleep mode voltage either by CTL3/SLPENB1 pin or by CTL6/SLPENB2 pin. **0**: Disable. Uses BUCK1_VID in all cases. **1**: Enabled. Uses BUCK1_SLP_VID when assigned sleep pin is low.

Copyright © 2022 Texas Instruments Incorporated

8.13.24 BUCK2SLPCTRL: BUCK2 Sleep Control Register (offset = 93h) [reset = X]

Figure 8-56. BUCK2SLPCTRL Register

Bit	7	6	5	4	3	2	1	0
Bit Name	BUCK2_SLP _ VID[6]	BUCK2_SLP _ VID[5]	BUCK2_SLP _ VID[4]	BUCK2_SLP _ VID[3]	BUCK2_SLP _ VID[2]	BUCK2_SLP _ VID[1]	BUCK2_SLP _ VID[0]	BUCK2_SLP _ EN
TPS6508640	0	1	0	1	1	0	1	1
TPS65086401	0	1	0	1	1	0	1	0
TPS6508641	0	1	0	1	1	0	1	0
TPS65086470	0	1	1	1	0	0	0	0
Access	R/W	R/W	R/W	R/W	R/W	R/W	R/W	R/W

Table 8-50. BUCK2SLPCTRL Register Descriptions

Bit	Field	Type	Reset	Description
7:1	BUCK2_SLP_VID[6:0]	R/W	X	This field sets the BUCK2 regulator output regulation voltage in sleep mode. See Table 8-22 and Table 8-23 for 10-mV and 25-mV step ranges for V_{OUT} options.
0	BUCK2_SLP_EN	R/W	X	BUCK2 sleep mode enable. BUCK2 is factory configured to switch to sleep mode voltage either by CTL3/SLPENB1 pin or by CTL6/SLPENB2 pin. **0**: Disable. Uses BUCK2_VID in all cases. **1**: Enabled. Uses BUCK2_SLP_VID when assigned sleep pin is low.

8.13.25 BUCK4VID: BUCK4 VID Register (offset = 94h) [reset = X]

Figure 8-57. BUCK4VID Register

Bit	7	6	5	4	3	2	1	0
Bit Name	BUCK4_ VID[6]	BUCK4_ VID[5]	BUCK4_ VID[4]	BUCK4_ VID[3]	BUCK4_ VID[2]	BUCK4_ VID[1]	BUCK4_ VID[0]	BUCK4_ DECAY
TPS6508640	0	0	1	0	1	0	0	0
TPS65086401	1	1	1	0	1	0	0	0
TPS6508641	1	1	1	0	1	0	0	0
TPS65086470	1	0	1	0	1	0	0	0
Access	R/W	R/W	R/W	R/W	R/W	R/W	R/W	R/W

Table 8-51. BUCK4VID Register Descriptions

Bit	Field	Type	Reset	Description
7:1	BUCK4_VID[6:0]	R/W	X	This field sets the BUCK4 regulator output regulation voltage in normal mode. See Table 8-22 and Table 8-23 for 10-mV and 25-mV step ranges for V_{OUT} options.
0	BUCK4_DECAY	R/W	X	Decay Bit **0**: The output slews down to a lower voltage set by the VID bits. **1**: The output decays down to a lower voltage set by the VID bits. Decay rate depends on total capacitance and load present at the output.

Copyright © 2022 Texas Instruments Incorporated

8.13.26 BUCK4SLPVID: BUCK4 Sleep VID Register (offset = 95h) [reset = X]

Figure 8-58. BUCK4SLPVID Register

Bit	7	6	5	4	3	2	1	0
Bit Name	BUCK4_SLP _ VID[6]	BUCK4_SLP _ VID[5]	BUCK4_SLP _ VID[4]	BUCK4_SLP _ VID[3]	BUCK4_SLP _ VID[2]	BUCK4_SLP _ VID[1]	BUCK4_SLP _ VID[0]	RESERVED
TPS6508640	0	0	1	0	1	0	0	0
TPS65086401	0	0	0	0	0	0	0	0
TPS6508641	1	1	1	0	1	0	0	0
TPS65086470	1	0	1	0	1	0	0	0
Access	R/W	R/W	R/W	R/W	R/W	R/W	R/W	R

Table 8-52. BUCK4SLPVID Register Descriptions

Bit	Field	Type	Reset	Description
7:1	BUCK4_SLP_VID[6:0]	R/W	X	This field sets the BUCK4 regulator output regulation voltage in sleep mode. See Table 8-22 and Table 8-23 for 10-mV and 25-mV step ranges for V_{OUT} options.

8.13.27 BUCK5VID: BUCK5 VID Register (offset = 96h) [reset = X]

Figure 8-59. BUCK5VID Register

Bit	7	6	5	4	3	2	1	0
Bit Name	BUCK5_ VID[6]	BUCK5_ VID[5]	BUCK5_ VID[4]	BUCK5_ VID[3]	BUCK5_ VID[2]	BUCK5_ VID[1]	BUCK5_ VID[0]	BUCK5_ DECAY
TPS6508640	0	1	1	1	0	0	0	0
TPS65086401	1	1	1	0	1	0	0	0
TPS6508641	0	1	0	0	0	0	0	0
TPS65086470	1	1	1	0	1	0	0	0
Access	R/W	R/W	R/W	R/W	R/W	R/W	R/W	R/W

Table 8-53. BUCK5VID Register Descriptions

Bit	Field	Type	Reset	Description
7:1	BUCK5_VID[6:0]	R/W	X	This field sets the BUCK5 regulator output regulation voltage in normal mode. See Table 8-22 and Table 8-23 for 10-mV and 25-mV step ranges for V_{OUT} options.
0	BUCK5_DECAY	R/W	X	Decay Bit **0**: The output slews down to a lower voltage set by the VID bits. **1**: The output decays down to a lower voltage set by the VID bits. Decay rate depends on total capacitance and load present at the output.

8.13.28 BUCK5SLPVID: BUCK5 Sleep VID Register (offset = 97h) [reset = X]

Figure 8-60. BUCK5SLPVID Register

Bit	7	6	5	4	3	2	1	0
Bit Name	BUCK5_SLP _ VID[6]	BUCK5_SLP _ VID[5]	BUCK5_SLP _ VID[4]	BUCK5_SLP _ VID[3]	BUCK5_SLP _ VID[2]	BUCK5_SLP _ VID[1]	BUCK5_SLP _ VID[0]	RESERVED
TPS6508640	0	1	1	1	0	0	0	0
TPS65086401	1	1	1	0	1	0	0	0
TPS6508641	0	1	0	0	0	0	0	0
TPS65086470	1	1	1	0	1	0	0	0
Access	R/W	R/W	R/W	R/W	R/W	R/W	R/W	R

Table 8-54. BUCK5SLPVID Register Descriptions

Bit	Field	Type	Reset	Description
7:1	BUCK5_SLP_VID[6:0]	R/W	X	This field sets the BUCK5 regulator output regulation voltage in sleep mode. See Table 8-22 and Table 8-23 for 10-mV and 25-mV step ranges for V_{OUT} options.

8.13.29 BUCK6VID: BUCK6 VID Register (offset = 98h) [reset = X]

Figure 8-61. BUCK6VID Register

Bit	7	6	5	4	3	2	1	0
Bit Name	BUCK6_ VID[6]	BUCK6_ VID[5]	BUCK6_ VID[4]	BUCK6_ VID[3]	BUCK6_ VID[2]	BUCK6_ VID[1]	BUCK6_ VID[0]	BUCK6_ DECAY
TPS6508640	1	0	1	1	1	1	1	0
TPS65086401	1	1	0	1	1	1	0	0
TPS6508641	0	1	1	1	0	0	0	0
TPS65086470	0	1	0	1	1	0	0	0
Access	R/W	R/W	R/W	R/W	R/W	R/W	R/W	R/W

Table 8-55. BUCK6VID Register Descriptions

Bit	Field	Type	Reset	Description
7:1	BUCK6_VID[6:0]	R/W	X	This field sets the BUCK6 regulator output regulation voltage in normal mode. See Table 8-22 and Table 8-23 for 10-mV and 25-mV step ranges for V_{OUT} options.
0	BUCK6_DECAY	R/W	X	Decay Bit **0**: The output slews down to a lower voltage set by the VID bits. **1**: The output decays down to a lower voltage set by the VID bits. Decay rate depends on total capacitance and load present at the output.

Copyright © 2022 Texas Instruments Incorporated

8.13.30 BUCK6SLPVID: BUCK6 Sleep VID Register (offset = 99h) [reset = X]

Figure 8-62. BUCK6SLPVID Register

Bit	7	6	5	4	3	2	1	0
Bit Name	BUCK6_SLP _ VID[6]	BUCK6_SLP _ VID[5]	BUCK6_SLP _ VID[4]	BUCK6_SLP _ VID[3]	BUCK6_SLP _ VID[2]	BUCK6_SLP _ VID[1]	BUCK6_SLP _ VID[0]	RESERVED
TPS6508640	1	0	1	1	1	1	1	0
TPS65086401	1	0	0	0	1	1	0	0
TPS6508641	0	1	1	1	0	0	0	0
TPS65086470	0	1	0	0	1	1	0	0
Access	R/W	R/W	R/W	R/W	R/W	R/W	R/W	R

Table 8-56. BUCK6SLPVID Register Descriptions

Bit	Field	Type	Reset	Description
7:1	BUCK6_SLP_VID[6:0]	R/W	X	This field sets the BUCK6 regulator output regulation voltage in sleep mode. See Table 8-22 and Table 8-23 for 10-mV and 25-mV step ranges for V_{OUT} options.

8.13.31 LDOA2VID: LDOA2 VID Register (offset = 9Ah) [reset = X]

Figure 8-63. LDOA2VID Register

Bit	7	6	5	4	3	2	1	0
Bit Name	LDOA2_SLP _VID[3]	LDOA2_SLP _VID[2]	LDOA2_SLP _VID[1]	LDOA2_SLP _VID[0]	LDOA2_ VID[3]	LDOA2_ VID[3]	LDOA2_ VID[1]	LDOA2_ VID[0]
TPS6508640	1	1	1	1	1	1	1	1
TPS65086401	1	0	1	0	1	0	1	0
TPS6508641	1	0	1	0	1	0	1	0
TPS65086470	0	0	0	0	0	0	0	0
Access	R/W	R/W	R/W	R/W	R/W	R/W	R/W	R/W

Table 8-57. LDOA2VID Register Descriptions

Bit	Field	Type	Reset	Description
7:4	LDOA2_SLP_VID[3:0]	R/W	X	This field sets the LDOA2 regulator output regulation voltage in sleep mode. See Table 8-25 for V_{out} options.
3:0	LDOA2_VID[3:0]	R/W	X	This field sets the LDOA2 regulator output regulation voltage in normal mode. See Table 8-25 for V_{out} options.

8.13.32 LDOA3VID: LDOA3 VID Register (offset = 9Bh) [reset = X]

Figure 8-64. LDOA3VID Register

Bit	7	6	5	4	3	2	1	0
Bit Name	LDOA3_SLP _ VID[3]	LDOA3_SLP _ VID[2]	LDOA3_SLP _ VID[1]	LDOA3_SLP _ VID[0]	LDOA3_ VID[3]	LDOA3_ VID[3]	LDOA3_ VID[1]	LDOA3_ VID[0]
TPS6508640	1	0	1	0	1	0	1	0
TPS65086401	1	0	1	0	1	0	1	0
TPS6508641	1	0	1	0	1	0	1	0
TPS65086470	0	0	0	0	0	0	0	0
Access	R/W	R/W	R/W	R/W	R/W	R/W	R/W	R/W

Table 8-58. LDOA3VID Register Descriptions

Bit	Field	Type	Reset	Description
7:4	LDOA3_SLP_VID[3:0]	R/W	X	This field sets the LDOA3 regulator output regulation voltage in sleep mode. See Table 8-25 for V_{out} options.
3:0	LDOA3_VID[3:0]	R/W	X	This field sets the LDOA3 regulator output regulation voltage in normal mode. See Table 8-25 for V_{out} options.

8.13.33 BUCK123CTRL: BUCK1-3 Control Register (offset = 9Ch) [reset = X]

Figure 8-65. BUCK123CTRL Register

Bit	7	6	5	4	3	2	1	0
Bit Name	RESERVED	RESERVED	BUCK3 _MODE	BUCK2 _MODE	BUCK1 _MODE	BUCK3 _DIS	BUCK2 _DIS	BUCK1 _DIS
TPS6508640	0	0	1	0	0	1	1	1
TPS65086401	0	0	1	0	0	1	1	1
TPS6508641	0	0	1	1	1	1	1	1
TPS65086470	0	0	1	0	0	1	1	1
Access	R	R	R/W	R/W	R/W	R/W	R/W	R/W

Table 8-59. BUCK123CTRL Register Descriptions

Bit	Field	Type	Reset	Description
5	BUCK3_MODE	R/W	X	This field sets the BUCK3 regulator operating mode. **0**: Automatic mode **1**: Forced PWM mode
4	BUCK2_MODE	R/W	X	This field sets the BUCK2 regulator operating mode. **0**: Automatic mode **1**: Forced PWM mode
3	BUCK1_MODE	R/W	X	This field sets the BUCK1 regulator operating mode. **0**: Automatic mode **1**: Forced PWM mode
2	BUCK3_DIS	R/W	X	BUCK3 Disable Bit. Writing 0 to this bit forces BUCK3 to turn off regardless of any control input pin (CTL1–CTL6) status. **0**: Disable **1**: Enable
1	BUCK2_DIS	R/W	X	BUCK2 Disable Bit. Writing 0 to this bit forces BUCK2 to turn off regardless of any control input pin (CTL1–CTL6) status. **0**: Disable **1**: Enable
0	BUCK1_DIS	R/W	X	BUCK1 Disable Bit. Writing 0 to this bit forces BUCK1 to turn off regardless of any control input pin (CTL1–CTL6) status. **0**: Disable **1**: Enable

Copyright © 2022 Texas Instruments Incorporated

8.13.34 PG_DELAY2: 2nd Power Good Delay Register (offset = 9Dh) [reset = X]

Programmable Power Good delay for GPO1, GPO2, and GPO4 pins, measured from the moment when all VRs assigned to respective GPO reach their regulation range to Power Good assertion. This is an optional register as the PMIC can be programmed for system PG, level shifter or I^{2}C controller GPO.

Figure 8-66. PG_DELAY2 Register

Bit	7	6	5	4	3	2	1	0
Bit Name	GPO2_PG_DELAY[2]	GPO2_PG_DELAY[1]	GPO2_PG_DELAY[0]	GPO4_PG_DELAY[2]	GPO4_PG_DELAY[1]	GPO4_PG_DELAY[0]	GPO1_PG_DELAY[1]	GPO1_PG_DELAY[0]
TPS6508640	—	—	—	0	0	0	0	0
TPS65086401	0	0	0	0	0	0	0	0
TPS6508641	—	—	—	0	0	0	0	0
TPS65086470	0	0	0	—	—	—	0	0
Access	R/W	R/W	R/W	R/W	R/W	R/W	R/W	R/W

Table 8-60. PG_DELAY2 Register Descriptions

Bit	Field	Type	Reset	Description
7:5	GPO2_PG_DELAY[2:0]	R/W	X	Programmable delay Power Good or level shifter for GPO2 pin. Measured from the moment when all rails grouped to this pin reach their regulation range. All values have ±10% variation. **000**: 0 ms **001**: 5.0 ms **010**: 10 ms **011**: 15 ms **100**: 20 ms **101**: 50 ms **110**: 75 ms **111**: 100 ms **—**: Bits not used. If GPO2 is controlled by I^{2}C rather than PG and is not used internally for VTT LDO enable, these bits have no impact. Default is set to 0b.
4:2	GPO4_PG_DELAY[2:0]	R/W	X	Programmable delay Power Good or level shifter for GPO4 pin. Measured from the moment when all rails grouped to this pin reach their regulation range. All values have ±10% variation. **000**: 0 ms **001**: 5.0 ms **010**: 10 ms **011**: 15 ms **100**: 20 ms **101**: 50 ms **110**: 75 ms **111**: 100 ms **—**: Bits not used. If GPO4 is controlled by I^{2}C rather than PG, these bits have no impact. Default is set to 0b.
1:0	GPO1_PG_DELAY[1:0]	R/W	X	Programmable delay Power Good or level shifter for GPO1 pin. Measured from the moment when all rails grouped to this pin reach their regulation range. All values have ±10% variation. **00**: 0 ms **01**: 5.0 ms **10**: 10 ms **11**: 15 ms **—**: Bits not used. If GPO1 is controlled by I^{2}C rather than PG, these bits have no impact. Default is set to 0b.

Copyright © 2022 Texas Instruments Incorporated

8.13.35 SWVTT_DIS: SWVTT Disable Register (offset = 9Fh) [reset = X]

Figure 8-67. SWVTT_DIS Register

Bit	7	6	5	4	3	2	1	0
Bit Name	SWB2_LDOA1_DIS	SWB1_DIS	SWA1_DIS	VTT_DIS	Reserved	Reserved	Reserved	Reserved
TPS6508640	1	1	1	1	0	0	0	0
TPS65086401	1	1	1	1	0	0	0	0
TPS6508641	1	1	1	1	0	0	0	0
TPS65086470	1	1	1	1	0	0	0	0
Access	R/W	R/W	R/W	R/W	R/W	R/W	R/W	R/W

Table 8-61. SWVTT_DIS Register Descriptions

Bit	Field	Type	Reset	Description
7	SWB2_LDOA1_DIS	R/W	X	SWB2 or LDOA1 Disable Bit. Writing 0 to this bit forces SWB2 or LDOA1 to turn off regardless of any control input pin (CTL1–CTL6) status. OTP setting selects either SWB2 or LDOA1. **0**: Disable. **1**: Enable. SWB2 for: TPS65086470 LDOA1 for: TPS6508640, TPS65086401, and TPS6508641
6	SWB1_DIS	R/W	X	SWB1 Disable Bit. Writing 0 to this bit forces SWB1 to turn off regardless of any control input pin (CTL1–CTL6) status. **0**: Disable. **1**: Enable.
5	SWA1_DIS	R/W	X	SWA1 Disable Bit. Writing 0 to this bit forces SWA1 to turn off regardless of any control input pin (CTL1–CTL6) status. **0**: Disable. **1**: Enable.
4	VTT_DIS	R/W	X	VTT Disable Bit. Writing 0 to this bit forces VTT to turn off regardless of any control input pin (CTL1–CTL6) status. **0**: Disable. **1**: Enable.
3:0	Reserved	R/W	0000	Reserved bits. Always write to 0000.

Copyright © 2022 Texas Instruments Incorporated

8.13.36 I2C_RAIL_EN1: 1st VR Pin Enable Override Register (offset = A0h) [reset = X]

Figure 8-68. I2C_RAIL_EN1 Register

Bit	7	6	5	4	3	2	1	0
Bit Name	LDOA2_EN	SWA1_EN	BUCK6_EN	BUCK5_EN	BUCK4_EN	BUCK3_EN	BUCK2_EN	BUCK1_EN
TPS6508640	1	0	0	0	0	0	0	0
TPS65086401	0	0	0	0	0	0	0	0
TPS6508641	0	0	0	0	0	0	0	0
TPS65086470	1	0	0	0	0	0	0	0
Access	R/W	R/W	R/W	R/W	R/W	R/W	R/W	R/W

Table 8-62. I2C_RAIL_EN1 Register Descriptions

Bit	Field	Type	Reset	Description
7	LDOA2_EN	R/W	X	LDOA2 I^{2}C Enable **0**: LDOA2 is enabled or disabled by one of the control input pins or internal PG signal. **1**: LDOA2 is forced on unless LDOA2_DIS = 0b.
6	SWA1_EN	R/W	X	SWA1 I^{2}C Enable **0**: SWA1 is enabled or disabled by one of the control input pins or internal PG signal. **1**: SWA1 is forced on unless SWA1_DIS = 0b.
5	BUCK6_EN	R/W	X	BUCK6 I^{2}C Enable **0**: BUCK6 is enabled or disabled by one of the control input pins or internal PG signal. **1**: BUCK6 is forced on unless BUCK6_DIS = 0b.
4	BUCK5_EN	R/W	X	BUCK5 I^{2}C Enable **0**: BUCK5 is enabled or disabled by one of the control input pins or internal PG signal. **1**: BUCK5 is forced on unless BUCK5_DIS = 0b.
3	BUCK4_EN	R/W	X	BUCK4 I^{2}C Enable **0**: BUCK4 is enabled or disabled by one of the control input pins or internal PG signal. **1**: BUCK4 is forced on unless BUCK4_DIS = 0b.
2	BUCK3_EN	R/W	X	BUCK3 I^{2}C Enable **0**: BUCK3 is enabled or disabled by one of the control input pins or internal PG signal. **1**: BUCK3 is forced on unless BUCK3_DIS = 0b.
1	BUCK2_EN	R/W	X	BUCK2 I^{2}C Enable **0**: BUCK2 is enabled or disabled by one of the control input pins or internal PG signal. **1**: BUCK2 is forced on unless BUCK2_DIS = 0b.
0	BUCK1_EN	R/W	X	BUCK1 I^{2}C Enable **0**: BUCK1 is enabled or disabled by one of the control input pins or internal PG signal. **1**: BUCK1 is forced on unless BUCK1_DIS = 0b.

Copyright © 2022 Texas Instruments Incorporated

8.13.37 I2C_RAIL_EN2/GPOCTRL: 2nd VR Pin Enable Override and GPO Control Register (offset = A1h) [reset = X]

Figure 8-69. I2C_RAIL_EN2/GPOCTRL Register

Bit	7	6	5	4	3	2	1	0
Bit Name	GPO4_LVL	GPO3_LVL	GPO2_LVL	GPO1_LVL	VTT_EN	SWB2_LDOA1_EN	SWB1_EN	LDOA3_EN
TPS6508640	—	—	0	—	0	0	0	1
TPS65086401	—	—	—	—	0	0	0	0
TPS6508641	—	—	0	—	0	0	0	0
TPS65086470	0	0	—	—	0	0	0	1
Access	R/W	R/W	R/W	R/W	R/W	R/W	R/W	R/W

Table 8-63. I2C_RAIL_EN2/GPOCTRL Register Descriptions

Bit	Field	Type	Reset	Description
7	GPO4_LVL	R/W	X	The field is to set GPO4 pin output if the pin is factory-configured as an I^{2}C controlled open-drain general-purpose output. **0**: The pin is driven to logic low. **1**: The pin is driven to logic high. **—**: Bit not used in this version; GPO4 is controlled by GPO4 PG tree. Default is set to 0b.
6	GPO3_LVL	R/W	X	The field is to set GPO3 pin output if the pin is factory-configured as either an I^{2}C controlled open-drain or a push-pull general-purpose output. **0**: The pin is driven to logic low. **1**: The pin is driven to logic high. **—**: Bit not used in this version; GPO3 is controlled by GPO3 PG tree. Default is set to 0b.
5	GPO2_LVL	R/W	X	The field is to set GPO2 pin output if the pin is factory-configured as either an I^{2}C controlled open-drain or a push-pull general-purpose output. **0**: The pin is driven to logic low. **1**: The pin is driven to logic high. **—**: Bit not used in this version; GPO2 is controlled by GPO2 PG tree. Default is set to 0b.
4	GPO1_LVL	R/W	X	The field is to set GPO1 pin output if the pin is factory-configured as either an I^{2}C controlled open-drain or a push-pull general-purpose output. **0**: The pin is driven to logic low. **1**: The pin is driven to logic high. **—**: Bit not used in this version; GPO1 is controlled by GPO1 PG tree. Default is set to 0b.
3	VTT_EN	R/W	X	VTT LDO I^{2}C Enable **0**: VTT LDO is enabled or disabled by one of the control input pins or internal PG signals. **1**: VTT LDO is forced on unless VTT_DIS = 0b.
2	SWB2_LDOA1_EN	R/W	X	SWB2 or LDOA1 I^{2}C Enable. Internal setting selects either SWB2 or LDOA1. **0**: SWB2 or LDOA1 is enabled or disabled by one of the control input pins or internal PG signals. **1**: SWB2 or LDOA1 is forced on unless SWB2_LDOA1_DIS = 0b. SWB2 for: TPS65086470 LDOA1 for: TPS6508640, TPS65086401, and TPS6508641
1	SWB1_EN	R/W	X	SWB1 I^{2}C Enable **0**: SWB1 is enabled or disabled by one of the control input pins or internal PG signals. **1**: SWB1 is forced on unless SWB1_DIS = 0b.

Copyright © 2022 Texas Instruments Incorporated

Table 8-63. I2C_RAIL_EN2/GPOCTRL Register Descriptions (continued)

Bit	Field	Type	Reset	Description
0	LDOA3_EN	R/W	X	LDOA3 I^2C Enable **0**: LDOA3 is enabled or disabled by one of the control input pins or internal PG signals. **1**: LDOA3 is forced on unless LDOA3_DIS = 0b.

8.13.38 PWR_FAULT_MASK1: 1st VR Power Fault Mask Register (offset = A2h) [reset = X]

Figure 8-70. PWR_FAULT_MASK1 Register

Bit	7	6	5	4	3	2	1	0
Bit Name	LDOA2_ FLTmsK	SWA1_ FLTmsK	BUCK6_ FLTmsK	BUCK5_ FLTmsK	BUCK4_ FLTmsK	BUCK3_ FLTmsK	BUCK2_ FLTmsK	BUCK1_ FLTmsK
TPS6508640	1	1	0	0	0	0	0	0
TPS65086401	0	0	0	0	0	0	0	0
TPS6508641	0	1	0	0	0	0	0	0
TPS65086470	1	1	0	0	0	0	0	0
Access	R/W	R/W	R/W	R/W	R/W	R/W	R/W	R/W

Table 8-64. PWR_FAULT_MASK1 Register Descriptions

Bit	Field	Type	Reset	Description
7	LDOA2_FLTmsK	R/W	X	LDOA2 Power Fault Mask. When masked, power fault from LDOA2 does not cause PMIC to shutdown. **0**: Not Masked **1**: Masked
6	SWA1_FLTmsK	R/W	X	SWA1 Power Fault Mask. When masked, power fault from SWA1 does not cause PMIC to shutdown. **0**: Not Masked **1**: Masked
5	BUCK6_FLTmsK	R/W	X	BUCK6 Power Fault Mask. When masked, power fault from BUCK6 does not cause PMIC to shutdown. **0**: Not Masked **1**: Masked
4	BUCK5_FLTmsK	R/W	X	BUCK5 Power Fault Mask. When masked, power fault from BUCK5 does not cause PMIC to shutdown. **0**: Not Masked **1**: Masked
3	BUCK4_FLTmsK	R/W	X	BUCK4 Power Fault Mask. When masked, power fault from BUCK4 does not cause PMIC to shutdown. **0**: Not Masked **1**: Masked
2	BUCK3_FLTmsK	R/W	X	BUCK3 Power Fault Mask. When masked, power fault from BUCK3 does not cause PMIC to shutdown. **0**: Not Masked **1**: Masked
1	BUCK2_FLTmsK	R/W	X	BUCK2 Power Fault Mask. When masked, power fault from BUCK2 does not cause PMIC to shutdown. **0**: Not Masked **1**: Masked
0	BUCK1_FLTmsK	R/W	X	BUCK1 Power Fault Mask. When masked, power fault from BUCK1 does not cause PMIC to shutdown. **0**: Not Masked **1**: Masked

Copyright © 2022 Texas Instruments Incorporated

8.13.39 PWR_FAULT_MASK2: 2nd VR Power Fault Mask Register (offset = A3h) [reset = X]

Figure 8-71. PWR_FAULT_MASK2 Register

Bit	7	6	5	4	3	2	1	0
Bit Name	RESERVED	RESERVED	RESERVED	LDOA1_ FLTmsK	VTT_ FLTmsK	SWB2_ FLTmsK	SWB1_ FLTmsK	LDOA3_ FLTmsK
TPS6508640	0	0	1	0	0	1	1	1
TPS65086401	0	0	1	0	1	0	0	0
TPS6508641	0	0	1	0	0	0	0	0
TPS65086470	0	0	1	1	0	1	1	1
Access	R	R/W	R/W	R/W	R/W	R/W	R/W	R/W

Table 8-65. PWR_FAULT_MASK2 Register Descriptions

Bit	Field	Type	Reset	Description
6	RESERVED	R/W	0	Reserved bit. Always write to 0b.
5	RESERVED	R/W	1	Reserved bit. Always write to 1b.
4	LDOA1_FLTmsK	R/W	X	LDOA1 Power Fault Mask. When masked, power fault from LDOA1 does not cause PMIC to shutdown. **0**: Not Masked **1**: Masked
3	VTT_FLTmsK	R/W	X	VTT LDO Power Fault Mask. When masked, power fault from VTT LDO does not cause PMIC to shutdown. **0**: Not Masked **1**: Masked
2	SWB2_FLTmsK	R/W	X	SWB2 Power Fault Mask. When masked, power fault from SWB2 does not cause PMIC to shutdown. **0**: Not Masked **1**: Masked
1	SWB1_FLTmsK	R/W	X	SWB1 Power Fault Mask. When masked, power fault from SWB1 does not cause PMIC to shutdown. **0**: Not Masked **1**: Masked
0	LDOA3_FLTmsK	R/W	X	LDOA3 Power Fault Mask. When masked, power fault from LDOA3 does not cause PMIC to shutdown. **0**: Not Masked **1**: Masked

Copyright © 2022 Texas Instruments Incorporated

8.13.40 GPO1PG_CTRL1: 1st GPO1 PG Control Register (offset = A4h) [reset = X]

Figure 8-72. GPO1PG_CTRL1 Register

Bit	7	6	5	4	3	2	1	0
Bit Name	LDOA2 _msK	SWA1 _msK	BUCK6 _msK	BUCK5 _msK	BUCK4 _msK	BUCK3 _msK	BUCK2 _msK	BUCK1 _msK
TPS6508640	1	1	1	1	1	1	0	1
TPS65086401	0	1	0	1	1	1	0	0
TPS6508641	1	1	1	1	1	1	1	0
TPS65086470	1	1	1	1	1	1	0	0
Access	R/W	R/W	R/W	R/W	R/W	R/W	R/W	R/W

Table 8-66. GPO1PG_CTRL1 Register Descriptions

Bit	Field	Type	Reset	Description
7	LDOA2_msK	R/W	X	**0**: LDOA2 PG is part of Power Good tree of GPO1 pin. **1**: LDOA2 PG is NOT part of Power Good tree of GPO1 pin and is ignored.
6	SWA1_msK	R/W	X	**0**: SWA1 PG is part of Power Good tree of GPO1 pin. **1**: SWA1 PG is NOT part of Power Good tree of GPO1 pin and is ignored.
5	BUCK6_msK	R/W	X	**0**: BUCK6 PG is part of Power Good tree of GPO1 pin. **1**: BUCK6 PG is NOT part of Power Good tree of GPO1 pin and is ignored.
4	BUCK5_msK	R/W	X	**0**: BUCK5 PG is part of Power Good tree of GPO1 pin. **1**: BUCK5 PG is NOT part of Power Good tree of GPO1 pin and is ignored.
3	BUCK4_msK	R/W	X	**0**: BUCK4 PG is part of Power Good tree of GPO1 pin. **1**: BUCK4 PG is NOT part of Power Good tree of GPO1 pin and is ignored.
2	BUCK3_msK	R/W	X	**0**: BUCK3 PG is part of Power Good tree of GPO1 pin. **1**: BUCK3 PG is NOT part of Power Good tree of GPO1 pin and is ignored.
1	BUCK2_msK	R/W	X	**0**: BUCK2 PG is part of Power Good tree of GPO1 pin. **1**: BUCK2 PG is NOT part of Power Good tree of GPO1 pin and is ignored.
0	BUCK1_msK	R/W	X	**0**: BUCK1 PG is part of Power Good tree of GPO1 pin. **1**: BUCK1 PG is NOT part of Power Good tree of GPO1 pin and is ignored.

Copyright © 2022 Texas Instruments Incorporated

8.13.41 GPO1PG_CTRL2: 2nd GPO1 PG Control Register (offset = A5h) [reset = X]

Figure 8-73. GPO1PG_CTRL2 Register

Bit	7	6	5	4	3	2	1	0
Bit Name	CTL5_msK	CTL4_msK	CTL2_msK	CTL1_msK	VTT_msK	SWB2_LDOA1_msK	SWB1_msK	LDOA3_msK
TPS6508640	1	1	1	1	1	1	1	1
TPS65086401	1	1	1	0	1	0	1	1
TPS6508641	1	1	1	1	1	1	1	1
TPS65086470	1	1	1	0	1	1	1	1
Access	R/W	R/W	R/W	R/W	R/W	R/W	R/W	R/W

Table 8-67. GPO1PG_CTRL2 Register Descriptions

Bit	Field	Type	Reset	Description
7	CTL5_msK	R/W	X	**0**: CTL5 pin status is part of Power Good tree of GPO1 pin. **1**: CTL5 pin status is NOT part of Power Good tree of GPO1 pin and is ignored.
6	CTL4_msK	R/W	X	**0**: CTL4 pin status is part of Power Good tree of GPO1 pin. **1**: CTL4 pin status is NOT part of Power Good tree of GPO1 pin and is ignored.
5	CTL2_msK	R/W	X	**0**: CTL2 pin status is part of Power Good tree of GPO1 pin. **1**: CTL2 pin status is NOT part of Power Good tree of GPO1 pin and is ignored.
4	CTL1_msK	R/W	X	**0**: CTL1 pin status is part of Power Good tree of GPO1 pin. **1**: CTL1 pin status is NOT part of Power Good tree of GPO1 pin and is ignored.
3	VTT_msK	R/W	X	**0**: VTT LDO PG is part of Power Good tree of GPO1 pin. **1**: VTT LDO PG is NOT part of Power Good tree of GPO1 pin and is ignored.
2	SWB2_LDOA1_msK	R/W	X	**0**: SWB2_LDOA1 PG is part of Power Good tree of GPO1 pin. **1**: SWB2_LDOA1 PG is NOT part of Power Good tree of GPO1 pin and is ignored. SWB2 for: TPS65086470 LDOA1 for:TPS6508640, TPS65086401, and TPS6508641
1	SWB1_msK	R/W	X	**0**: SWB1 PG is part of Power Good tree of GPO1 pin. **1**: SWB1 PG is NOT part of Power Good tree of GPO1 pin and is ignored.
0	LDOA3_msK	R/W	X	**0**: LDOA3 PG is part of Power Good tree of GPO1 pin. **1**: LDOA3 PG is NOT part of Power Good tree of GPO1 pin and is ignored.

Copyright © 2022 Texas Instruments Incorporated

8.13.42 GPO4PG_CTRL1: 1st GPO4 PG Control Register (offset = A6h) [reset = X]

Figure 8-74. GPO4PG_CTRL1 Register

Bit	7	6	5	4	3	2	1	0
Bit Name	LDOA2_msK	SWA1 _msK	BUCK6 _msK	BUCK5 _msK	BUCK4 _msK	BUCK3 _msK	BUCK2 _msK	BUCK1 _msK
TPS6508640	1	1	1	1	0	1	1	1
TPS65086401	1	0	1	1	1	1	1	1
TPS6508641	1	1	1	1	0	1	1	1
TPS65086470	1	1	1	1	1	1	1	1
Access	R/W	R/W	R/W	R/W	R/W	R/W	R/W	R/W

Table 8-68. GPO4PG_CTRL1 Register Descriptions

Bit	Field	Type	Reset	Description
7	LDOA2_msK	R/W	X	**0**: LDOA2 PG is part of Power Good tree of GPO4 pin. **1**: LDOA2 PG is NOT part of Power Good tree of GPO4 pin and is ignored.
6	SWA1_msK	R/W	X	**0**: SWA1 PG is part of Power Good tree of GPO4 pin. **1**: SWA1 PG is NOT part of Power Good tree of GPO4 pin and is ignored.
5	BUCK6_msK	R/W	X	**0**: BUCK6 PG is part of Power Good tree of GPO4 pin. **1**: BUCK6 PG is NOT part of Power Good tree of GPO4 pin and is ignored.
4	BUCK5_msK	R/W	X	**0**: BUCK5 PG is part of Power Good tree of GPO4 pin. **1**: BUCK5 PG is NOT part of Power Good tree of GPO4 pin and is ignored.
3	BUCK4_msK	R/W	X	**0**: BUCK4 PG is part of Power Good tree of GPO4 pin. **1**: BUCK4 PG is NOT part of Power Good tree of GPO4 pin and is ignored.
2	BUCK3_msK	R/W	X	**0**: BUCK3 PG is part of Power Good tree of GPO4 pin. **1**: BUCK3 PG is NOT part of Power Good tree of GPO4 pin and is ignored.
1	BUCK2_msK	R/W	X	**0**: BUCK2 PG is part of Power Good tree of GPO4 pin. **1**: BUCK2 PG is NOT part of Power Good tree of GPO4 pin and is ignored.
0	BUCK1_msK	R/W	X	**0**: BUCK1 PG is part of Power Good tree of GPO4 pin. **1**: BUCK1 PG is NOT part of Power Good tree of GPO4 pin and is ignored.

Copyright © 2022 Texas Instruments Incorporated

8.13.43 GPO4PG_CTRL2: 2nd GPO4 PG Control Register (offset = A7h) [reset = X]

Figure 8-75. GPO4PG_CTRL2 Register

Bit	7	6	5	4	3	2	1	0
Bit Name	CTL5_msK	CTL4_msK	CTL2_msK	CTL1_msK	VTT_msK	SWB2_LDO A1_msK	SWB1_msK	LDOA3_msK
TPS6508640	1	0	1	1	1	1	1	1
TPS65086401	1	1	1	1	1	1	1	1
TPS6508641	0	1	1	1	1	1	1	1
TPS65086470	1	1	1	1	1	1	1	1
Access	R/W	R/W	R/W	R/W	R/W	R/W	R/W	R/W

Table 8-69. GPO4PG_CTRL2 Register Descriptionsr

Bit	Field	Type	Reset	Description
7	CTL5_msK	R/W	X	**0**: CTL5 pin status is part of Power Good tree of GPO4 pin. **1**: CTL5 pin status is NOT part of Power Good tree of GPO4 pin and is ignored.
6	CTL4_msK	R/W	X	**0**: CTL4 pin status is part of Power Good tree of GPO4 pin. **1**: CTL4 pin status is NOT part of Power Good tree of GPO4 pin and is ignored.
5	CTL2_msK	R/W	X	**0**: CTL2 pin status is part of Power Good tree of GPO4 pin. **1**: CTL2 pin status is NOT part of Power Good tree of GPO4 pin and is ignored.
4	CTL1_msK	R/W	X	**0**: CTL1 pin status is part of Power Good tree of GPO4 pin. **1**: CTL1 pin status is NOT part of Power Good tree of GPO4 pin and is ignored.
3	VTT_msK	R/W	X	**0**: VTT LDO PG is part of Power Good tree of GPO4 pin. **1**: VTT LDO PG is NOT part of Power Good tree of GPO4 pin and is ignored.
2	SWB2_LDOA1_msK	R/W	X	**0**: SWB2_LDOA1 PG is part of Power Good tree of GPO4 pin. **1**: SWB2_LDOA1 PG is NOT part of Power Good tree of GPO4 pin and is ignored. SWB2 for: TPS65086470 LDOA1 for: TPS6508640, TPS65086401, and TPS6508641
1	SWB1_msK	R/W	X	**0**: SWB1 PG is part of Power Good tree of GPO4 pin. **1**: SWB1 PG is NOT part of Power Good tree of GPO4 pin and is ignored.
0	LDOA3_msK	R/W	X	**0**: LDOA3 PG is part of Power Good tree of GPO4 pin. **1**: LDOA3 PG is NOT part of Power Good tree of GPO4 pin and is ignored.

Copyright © 2022 Texas Instruments Incorporated

8.13.44 GPO2PG_CTRL1: 1st GPO2 PG Control Register (offset = A8h) [reset = X]

Figure 8-76. GPO2PG_CTRL1 Register

Bit	7	6	5	4	3	2	1	0
Bit Name	LDOA2_msK	SWA1 _msK	BUCK6 _msK	BUCK5 _msK	BUCK4 _msK	BUCK3 _msK	BUCK2 _msK	BUCK1 _msK
TPS6508640	1	1	0	1	1	1	1	1
TPS65086401	1	1	1	0	1	0	1	1
TPS6508641	1	1	0	1	1	1	1	1
TPS65086470	1	1	0	0	0	0	0	0
Access	R/W	R/W	R/W	R/W	R/W	R/W	R/W	R/W

Table 8-70. GPO2PG_CTRL1 Register Descriptions

Bit	Field	Type	Reset	Description
7	LDOA2_msK	R/W	X	**0**: LDOA2 PG is part of Power Good tree of GPO2 pin. **1**: LDOA2 PG is NOT part of Power Good tree of GPO2 pin and is ignored.
6	SWA1_msK	R/W	X	**0**: SWA1 PG is part of Power Good tree of GPO2 pin. **1**: SWA1 PG is NOT part of Power Good tree of GPO2 pin and is ignored.
5	BUCK6_msK	R/W	X	**0**: BUCK6 PG is part of Power Good tree of GPO2 pin. **1**: BUCK6 PG is NOT part of Power Good tree of GPO2 pin and is ignored.
4	BUCK5_msK	R/W	X	**0**: BUCK5 PG is part of Power Good tree of GPO2 pin. **1**: BUCK5 PG is NOT part of Power Good tree of GPO2 pin and is ignored.
3	BUCK4_msK	R/W	X	**0**: BUCK4 PG is part of Power Good tree of GPO2 pin. **1**: BUCK4 PG is NOT part of Power Good tree of GPO2 pin and is ignored.
2	BUCK3_msK	R/W	X	**0**: BUCK3 PG is part of Power Good tree of GPO2 pin. **1**: BUCK3 PG is NOT part of Power Good tree of GPO2 pin and is ignored.
1	BUCK2_msK	R/W	X	**0**: BUCK2 PG is part of Power Good tree of GPO2 pin. **1**: BUCK2 PG is NOT part of Power Good tree of GPO2 pin and is ignored.
0	BUCK1_msK	R/W	X	**0**: BUCK1 PG is part of Power Good tree of GPO2 pin. **1**: BUCK1 PG is NOT part of Power Good tree of GPO2 pin and is ignored.

Copyright © 2022 Texas Instruments Incorporated

8.13.45 GPO2PG_CTRL2: 2nd GPO2 PG Control Register (offset = A9h) [reset = X]

Figure 8-77. GPO2PG_CTRL2 Register

Bit	7	6	5	4	3	2	1	0
Bit Name	CTL5_msK	CTL4_msK	CTL2_msK	CTL1_msK	VTT_msK	SWB2_LDOA1_msK	SWB1_msK	LDOA3_msK
TPS6508640	0	0	1	1	1	1	1	1
TPS65086401	1	1	1	1	1	1	0	0
TPS6508641	1	1	1	1	1	1	1	1
TPS65086470	1	1	0	0	0	1	1	1
Access	R/W	R/W	R/W	R/W	R/W	R/W	R/W	R/W

Table 8-71. GPO2PG_CTRL2 Register Descriptions

Bit	Field	Type	Reset	Description
7	CTL5_msK	R/W	X	**0**: CTL5 pin status is part of Power Good tree of GPO2 pin. **1**: CTL5 pin status is NOT part of Power Good tree of GPO2 pin and is ignored.
6	CTL4_msK	R/W	X	**0**: CTL4 pin status is part of Power Good tree of GPO2 pin. **1**: CTL4 pin status is NOT part of Power Good tree of GPO2 pin and is ignored.
5	CTL2_msK	R/W	X	**0**: CTL2 pin status is part of Power Good tree of GPO2 pin. **1**: CTL2 pin status is NOT part of Power Good tree of GPO2 pin and is ignored.
4	CTL1_msK	R/W	X	**0**: CTL1 pin status is part of Power Good tree of GPO2 pin. **1**: CTL1 pin status is NOT part of Power Good tree of GPO2 pin and is ignored.
3	VTT_msK	R/W	X	**0**: VTT LDO PG is part of Power Good tree of GPO2 pin. **1**: VTT LDO PG is NOT part of Power Good tree of GPO2 pin and is ignored.
2	SWB2_LDOA1_msK	R/W	X	**0**: SWB2_LDOA1 PG is part of Power Good tree of GPO2 pin. **1**: SWB2_LDOA1 PG is NOT part of Power Good tree of GPO2 pin and is ignored. SWB2 for: TPS65086470 LDOA1 for: TPS6508640, TPS65086401, and TPS6508641
1	SWB1_msK	R/W	X	**0**: SWB1 PG is part of Power Good tree of GPO2 pin. **1**: SWB1 PG is NOT part of Power Good tree of GPO2 pin and is ignored.
0	LDOA3_msK	R/W	X	**0**: LDOA3 PG is part of Power Good tree of GPO2 pin. **1**: LDOA3 PG is NOT part of Power Good tree of GPO2 pin and is ignored.

8.13.46 GPO3PG_CTRL1: 1st GPO3 PG Control Register (offset = AAh) [reset = X]

Figure 8-78. GPO3PG_CTRL1 Register

Bit	7	6	5	4	3	2	1	0
Bit Name	LDOA2 _msK	SWA1 _msK	BUCK6 _msK	BUCK5 _msK	BUCK4 _msK	BUCK3 _msK	BUCK2 _msK	BUCK1 _msK
TPS6508640	1	1	1	0	0	0	0	0
TPS65086401	0	1	0	1	1	1	0	0
TPS6508641	1	1	1	1	0	1	1	1
TPS65086470	1	1	0	1	1	1	1	1
Access	R/W	R/W	R/W	R/W	R/W	R/W	R/W	R/W

Table 8-72. GPO3PG_CTRL1 Register Descriptions

Bit	Field	Type	Reset	Description
7	LDOA2_msK	R/W	X	**0**: LDOA2 PG is part of Power Good tree of GPO3 pin. **1**: LDOA2 PG is NOT part of Power Good tree of GPO3 pin and is ignored.
6	SWA1_msK	R/W	X	**0**: SWA1 PG is part of Power Good tree of GPO3 pin. **1**: SWA1 PG is NOT part of Power Good tree of GPO3 pin and is ignored.
5	BUCK6_msK	R/W	X	**0**: BUCK6 PG is part of Power Good tree of GPO3 pin. **1**: BUCK6 PG is NOT part of Power Good tree of GPO3 pin and is ignored.
4	BUCK5_msK	R/W	X	**0**: BUCK5 PG is part of Power Good tree of GPO3 pin. **1**: BUCK5 PG is NOT part of Power Good tree of GPO3 pin and is ignored.
3	BUCK4_msK	R/W	X	**0**: BUCK4 PG is part of Power Good tree of GPO3 pin. **1**: BUCK4 PG is NOT part of Power Good tree of GPO3 pin and is ignored.
2	BUCK3_msK	R/W	X	**0**: BUCK3 PG is part of Power Good tree of GPO3 pin. **1**: BUCK3 PG is NOT part of Power Good tree of GPO3 pin and is ignored.
1	BUCK2_msK	R/W	X	**0**: BUCK2 PG is part of Power Good tree of GPO3 pin. **1**: BUCK2 PG is NOT part of Power Good tree of GPO3 pin and is ignored.
0	BUCK1_msK	R/W	X	**0**: BUCK1 PG is part of Power Good tree of GPO3 pin. **1**: BUCK1 PG is NOT part of Power Good tree of GPO3 pin and is ignored.

Copyright © 2022 Texas Instruments Incorporated

8.13.47 GPO3PG_CTRL2: 2nd GPO3 PG Control Register (offset = ABh) [reset = X]

Figure 8-79. GPO3PG_CTRL2 Register

Bit	7	6	5	4	3	2	1	0
Bit Name	CTL5_msK	CTL4_msK	CTL2_msK	CTL1_msK	VTT_msK	SWB2_LDOA1_msK	SWB1_msK	LDOA3_msK
TPS6508640	1	0	1	1	1	1	1	1
TPS65086401	1	1	1	0	1	0	1	1
TPS6508641	1	1	1	0	1	1	1	1
TPS65086470	1	1	0	1	1	1	1	1
Access	R/W	R/W	R/W	R/W	R/W	R/W	R/W	R/W

Table 8-73. GPO3PG_CTRL2 Register Descriptions

Bit	Field	Type	Reset	Description
7	CTL5_msK	R/W	X	**0**: CTL5 pin status is part of Power Good tree of GPO3 pin. **1**: CTL5 pin status is NOT part of Power Good tree of GPO3 pin and is ignored.
6	CTL4_msK	R/W	X	**0**: CTL4 pin status is part of Power Good tree of GPO3 pin. **1**: CTL4 pin status is NOT part of Power Good tree of GPO3 pin and is ignored.
5	CTL2_msK	R/W	X	**0**: CTL2 pin status is part of Power Good tree of GPO3 pin. **1**: CTL2 pin status is NOT part of Power Good tree of GPO3 pin and is ignored.
4	CTL1_msK	R/W	X	**0**: CTL1 pin status is part of Power Good tree of GPO3 pin. **1**: CTL1 pin status is NOT part of Power Good tree of GPO3 pin and is ignored.
3	VTT_msK	R/W	X	**0**: VTT LDO PG is part of Power Good tree of GPO3 pin. **1**: VTT LDO PG is NOT part of Power Good tree of GPO3 pin and is ignored.
2	SWB2_LDOA1_msK	R/W	X	**0**: SWB2_LDOA1 PG is part of Power Good tree of GPO3 pin. **1**: SWB2_LDOA1 PG is NOT part of Power Good tree of GPO3 pin and is ignored. SWB2 for: TPS65086470 LDOA1 for: TPS6508640, TPS65086401, and TPS6508641
1	SWB1_msK	R/W	X	**0**: SWB1 PG is part of Power Good tree of GPO3 pin. **1**: SWB1 PG is NOT part of Power Good tree of GPO3 pin and is ignored.
0	LDOA3_msK	R/W	X	**0**: LDOA3 PG is part of Power Good tree of GPO3 pin. **1**: LDOA3 PG is NOT part of Power Good tree of GPO3 pin and is ignored.

Copyright © 2022 Texas Instruments Incorporated

8.13.48 MISCSYSPG Register (offset = ACh) [reset = X]

Figure 8-80. MISCSYSPG Register

Bit	7	6	5	4	3	2	1	0
Bit Name	GPO1_ CTL3_msK	GPO1_ CTL6_msK	GPO4_ CTL3_msK	GPO4_ CTL6_msK	GPO2_ CTL3_msK	GPO2_ CTL6_msK	GPO3_ CTL3_msK	GPO3_ CTL6_msK
TPS6508640	1	0	1	0	1	0	1	1
TPS65086401	1	1	1	1	1	1	1	1
TPS6508641	1	1	1	0	1	1	1	0
TPS65086470	1	1	1	0	1	1	1	1
Access	R/W	R/W	R/W	R/W	R/W	R/W	R/W	R/W

Table 8-74. MISCSYSPG Register Descriptions

Bit	Field	Type	Reset	Description
7	GPO1_CTL3_msK	R/W	X	**0**: CTL3 pin status is part of Power Good tree of GPO1 pin. **1**: CTL3 pin status is NOT part of Power Good tree of GPO1 pin.
6	GPO1_CTL6_msK	R/W	X	**0**: CTL6 pin status is part of Power Good tree of GPO1 pin. **1**: CTL6 pin status is NOT part of Power Good tree of GPO1 pin.
5	GPO4_CTL3_msK	R/W	X	**0**: CTL3 pin status is part of Power Good tree of GPO4 pin. **1**: CTL3 pin status is NOT part of Power Good tree of GPO4 pin.
4	GPO4_CTL6_msK	R/W	X	**0**: CTL6 pin status is part of Power Good tree of GPO4 pin. **1**: CTL6 pin status is NOT part of Power Good tree of GPO4 pin.
3	GPO2_CTL3_msK	R/W	X	**0**: CTL3 pin status is part of Power Good tree of GPO2 pin. **1**: CTL3 pin status is NOT part of Power Good tree of GPO2 pin.
2	GPO2_CTL6_msK	R/W	X	**0**: CTL6 pin status is part of Power Good tree of GPO2 pin. **1**: CTL6 pin status is NOT part of Power Good tree of GPO2 pin.
1	GPO3_CTL3_msK	R/W	X	**0**: CTL3 pin status is part of Power Good tree of GPO3 pin. **1**: CTL3 pin status is NOT part of Power Good tree of GPO3pin.
0	GPO3_CTL6_msK	R/W	X	**0**: CTL6 pin status is part of Power Good tree of GPO3 pin. **1**: CTL6 pin status is NOT part of Power Good tree of GPO3 pin.

Copyright © 2022 Texas Instruments Incorporated

8.13.48.1 VTT_DISCH_CTRL Register (offset = ADh) [reset = X]

Figure 8-81. VTT_DISCH_CTRL Register

Bit	7	6	5	4	3	2	1	0
Bit Name	RESERVED	RESERVED	RESERVED	VTT_ DISCHG	RESERVED	RESERVED	RESERVED	RESERVED
TPS6508640	0	1	0	1	1	1	1	1
TPS65086401	0	1	0	1	1	1	1	1
TPS6508641	0	1	0	1	1	1	1	1
TPS65086470	0	1	0	1	1	1	0	0
Access	R/W	R/W	R/W	R/W	R/W	R/W	R/W	R/W

Table 8-75. VTT_DISCH_CTRL Register Descriptions

Bit	Field	Type	Reset	Description
7:5	RESERVED	R/W	X	Reserved bits. Always write to match OTP settings.
4	VTT_DISCHG	R/W	X	**0**: no discharge **1**: 100 Ω
3:0	RESERVED	R/W	X	Reserved bits. Always write to match OTP settings.

8.13.49 LDOA1_SWB2_CTRL: LDOA1 and SWB2 Control Register (offset = AEh) [reset = X]

Figure 8-82. LDOA1_SWB2_CTRL Register

Bit	7	6	5	4	3	2	1	0
Bit Name	LDOA1_ DISCHG[1]	LDOA1_ DISCHG[0]	LDOA1_SWB2_ SDWN_CONFIG	LDOA1_ VID[3]	LDOA1_ VID[2]	LDOA1_ VID[1]	LDOA1_ VID[0]	LDOA1_ SWB2_EN
TPS6508640	0	1	0	1	0	1	0	0
TPS65086401	0	1	0	0	1	0	0	0
TPS6508641	0	1	0	0	1	0	0	0
TPS65086470	0	1	0	0	1	0	0	0
Access	R/W	R/W	R/W	R/W	R/W	R/W	R/W	R/W

Table 8-76. LDOA1_SWB2_CTRL Register Descriptions

Bit	Field	Type	Reset	Description
7:6	LDOA1_DISCHG[1:0]	R/W	X	LDOA1 discharge resistance **00**: no discharge **01**: 100 Ω **10**: 200 Ω **11**: 500 Ω
5	LDOA1_SWB2_SDWN_CO NFIG	R/W	X	Control for Disabling LDOA1 or SWB2 (OTP dependent) during Emergency Shutdown. When LDOA1 is used in sequence and SWB1 and SWB2 are not merged, this will control SWB2. **0**: LDOA1 or SWB2 will turn off during Emergency Shutdown for factory-programmable duration of 1 ms, 5 ms, 10 ms, or 100 ms. **1**: LDOA1 or SWB2 is controlled by LDOA1_SWB2_EN bit only. LDOA1 for: TPS65086470 SWB2 for: TPS6508640 Unused for: TPS65086401 and TPS6508641
4:1	LDOA1_VID[3:0]	R/W	X	This field sets the LDOA1 regulator output regulation voltage. See Table 8-24 for V_{OUT} options.
0	LDOA1_SWB2_EN	R/W	X	LDOA1 or SWB2 Enable Bit. **0**: Disable. **1**: Enable. LDOA1 for: TPS65086470 SWB2 for: TPS6508640 Unused for: TPS65086401 and TPS6508641

8.13.50 PG_STATUS1: 1st Power Good Status Register (offset = B0h) [reset = 0000 0000]

Figure 8-83. PG_STATUS1 Register

Bit	7	6	5	4	3	2	1	0
Bit Name	LDOA2_ PGOOD	SWA1_ PGOOD	BUCK6_ PGOOD	BUCK5_ PGOOD	BUCK4_ PGOOD	BUCK3_ PGOOD	BUCK2_ PGOOD	BUCK1_ PGOOD
TPS650864	0	0	0	0	0	0	0	0
Access	R	R	R	R	R	R	R	R

Table 8-77. PG_STATUS1 Register Descriptions

Bit	Field	Type	Reset	Description
7	LDOA2_PGOOD	R	0	LDOA2 Power Good status. **0**: The output is not in target regulation range. **1**: The output is in target regulation range.
6	SWA1_PGOOD	R	0	SWA1 Power Good status. **0**: The output is not in target regulation range. **1**: The output is in target regulation range.
5	BUCK6_PGOOD	R	0	BUCK6 Power Good status. **0**: The output is not in target regulation range. **1**: The output is in target regulation range.
4	BUCK5_PGOOD	R	0	BUCK5 Power Good status. **0**: The output is not in target regulation range. **1**: The output is in target regulation range.
3	BUCK4_PGOOD	R	0	BUCK4 Power Good status. **0**: The output is not in target regulation range. **1**: The output is in target regulation range.
2	BUCK3_PGOOD	R	0	BUCK3 Power Good status. **0**: The output is not in target regulation range. **1**: The output is in target regulation range.
1	BUCK2_PGOOD	R	0	BUCK2 Power Good status. **0**: The output is not in target regulation range. **1**: The output is in target regulation range.
0	BUCK1_PGOOD	R	0	BUCK1 Power Good status. **0**: The output is not in target regulation range. **1**: The output is in target regulation range.

Copyright © 2022 Texas Instruments Incorporated

8.13.51 PG_STATUS2: 2nd Power Good Status Register (offset = B1h) [reset = 0000 0000]

Figure 8-84. PG_STATUS2 Register

Bit	7	6	5	4	3	2	1	0
Bit Name	RESERVED	RESERVED	LDO5 _PGOOD	LDOA1 _PGOOD	VTT _PGOOD	SWB2 _PGOOD	SWB1 _PGOOD	LDOA3 _PGOOD
TPS650864	0	0	0	0	0	0	0	0
Access	R	R	R	R	R	R	R	R

Table 8-78. PG_STATUS2 Register Descriptions

Bit	Field	Type	Reset	Description
5	LDO5_PGOOD	R	0	LDO5 Power Good status. **0**: The output is not in target regulation range. **1**: The output is in target regulation range.
4	LDOA1_PGOOD	R	0	LDOA1 Power Good status. **0**: The output is not in target regulation range. **1**: The output is in target regulation range.
3	VTT_PGOOD	R	0	VTT LDO Power Good status. **0**: The output is not in target regulation range. **1**: The output is in target regulation range.
2	SWB2_PGOOD	R	0	SWB2 Power Good status. **0**: The output is not in target regulation range. **1**: The output is in target regulation range.
1	SWB1_PGOOD	R	0	SWB1 Power Good status. **0**: The output is not in target regulation range. **1**: The output is in target regulation range.
0	LDOA3_PGOOD	R	0	LDOA3 Power Good status. **0**: The output is not in target regulation range. **1**: The output is in target regulation range.

Copyright © 2022 Texas Instruments Incorporated

8.13.52 PWR_FAULT_STATUS1: 1st Power Fault Status Register (offset = B2h) [reset = 0000 0000]

Figure 8-85. PWR_FAULT_STATUS1 Register

Bit	7	6	5	4	3	2	1	0
Bit Name	LDOA2_ PWRFLT	SWA1_ PWRFLT	BUCK6_ PWRFLT	BUCK5_ PWRFLT	BUCK4_ PWRFLT	BUCK3_ PWRFLT	BUCK2_ PWRFLT	BUCK1_ PWRFLT
TPS650864	0	0	0	0	0	0	0	0
Access	R/W	R/W	R/W	R/W	R/W	R/W	R/W	R/W

Table 8-79. PWR_FAULT_STATUS1 Register Descriptions

Bit	Field	Type	Reset	Description
7	LDOA2_PWRFLT	R	0	This fields indicates that LDOA2 has lost its regulation. **0**: No Fault. **1**: Power fault has occurred. The host to write 1 to clear.
6	SWA1_PWRFLT	R	0	This fields indicates that SWA1 has lost its regulation. **0**: No Fault. **1**: Power fault has occurred. The host to write 1 to clear.
5	BUCK6_PWRFLT	R	0	This fields indicates that BUCK6 has lost its regulation. **0**: No Fault. **1**: Power fault has occurred. The host to write 1 to clear.
4	BUCK5_PWRFLT	R	0	This fields indicates that BUCK5 has lost its regulation. **0**: No Fault. **1**: Power fault has occurred. The host to write 1 to clear.
3	BUCK4_PWRFLT	R	0	This fields indicates that BUCK4 has lost its regulation. **0**: No Fault. **1**: Power fault has occurred. The host to write 1 to clear.
2	BUCK3_PWRFLT	R	0	This fields indicates that BUCK3 has lost its regulation. **0**: No Fault. **1**: Power fault has occurred. The host to write 1 to clear.
1	BUCK2_PWRFLT	R	0	This fields indicates that BUCK2 has lost its regulation. **0**: No Fault. **1**: Power fault has occurred. The host to write 1 to clear.
0	BUCK1_PWRFLT	R	0	This fields indicates that BUCK1 has lost its regulation. **0**: No Fault. **1**: Power fault has occurred. The host to write 1 to clear.

Copyright © 2022 Texas Instruments Incorporated

8.13.53 PWR_FAULT_STATUS2: 2nd Power Fault Status Register (offset = B3h) [reset = 0000 0000]

Figure 8-86. PWR_FAULT_STATUS2 Register

Bit	7	6	5	4	3	2	1	0
Bit Name	RESERVED	RESERVED	RESERVED	LDOA1_ PWRFLT	VTT_ PWRFLT	SWB2_ _PWRFLT	SWB1_ PWRFLT	LDOA3_ PWRFLT
TPS650864	0	0	0	0	0	0	0	0
Access	R	R	R/W	R/W	R/W	R/W	R/W	R/W

Table 8-80. PWR_FAULT_STATUS2 Register Descriptions

Bit	Field	Type	Reset	Description
4	LDOA1_PWRFLT	R/W	0	This fields indicates that LDOA1 has lost its regulation. **0**: No Fault. **1**: Power fault has occurred. The host to write 1 to clear.
3	VTT_PWRFLT	R/W	0	This fields indicates that VTT LDO has lost its regulation. **0**: No Fault. **1**: Power fault has occurred. The host to write 1 to clear.
2	SWB2_PWRFLT	R/W	0	This fields indicates that SWB2 has lost its regulation. **0**: No Fault. **1**: Power fault has occurred. The host to write 1 to clear.
1	SWB1_PWRFLT	R/W	0	This fields indicates that SWB1 has lost its regulation. **0**: No Fault. **1**: Power fault has occurred. The host to write 1 to clear.
0	LDOA3_PWRFLT	R/W	0	This fields indicates that LDOA3 has lost its regulation. **0**: No Fault. **1**: Power fault has occurred. The host to write 1 to clear.

Copyright © 2022 Texas Instruments Incorporated

8.13.54 TEMPCRIT: Temperature Fault Status Register (offset = B4h) [reset = 0000 0000]

Asserted when an internal temperature sensor detects rise of die temperature above the CRITICAL temperature threshold (T_{CRIT}). There are 5 temperature sensors across the die.

Figure 8-87. TEMPCRIT Register

Bit	7	6	5	4	3	2	1	0
Bit Name	RESERVED	RESERVED	RESERVED	DIE_CRIT	VTT_CRIT	TOP-RIGHT _CRIT	TOP-LEFT _CRIT	BOTTOM-RIGHT _CRIT
TPS650864	0	0	0	0	0	0	0	0
Access	R	R	R	R/W	R/W	R/W	R/W	R/W

Table 8-81. TEMPCRIT Register Descriptions

Bit	Field	Type	Reset	Description
4	DIE_CRIT	R/W	0	Temperature of rest of die has exceeded T_{CRIT}. **0**: Not asserted. **1**: Asserted. The host to write 1 to clear.
3	VTT_CRIT	R/W	0	Temperature of VTT LDO has exceeded T_{CRIT}. **0**: Not asserted. **1**: Asserted. The host to write 1 to clear.
2	TOP-RIGHT_CRIT	R/W	0	Temperature of die Top-Right has exceeded T_{CRIT}. Top-Right corner of die from top view given pin1 is in Top-Left corner. **0**: Not asserted. **1**: Asserted. The host to write 1 to clear.
1	TOP-LEFT_CRIT	R/W	0	Temperature of die Top-Left has exceeded T_{CRIT}.Top-Left corner of die from top view given pin1 is in Top-Left corner. **0**: Not asserted. **1**: Asserted. The host to write 1 to clear.
0	BOTTOM-RIGHT_CRIT	R/W	0	Temperature of die Bottom-Right has exceeded T_{CRIT}. Bottom-Right corner of die from top view given pin1 is in Top-Left corner. **0**: Not asserted. **1**: Asserted. The host to write 1 to clear.

Copyright © 2022 Texas Instruments Incorporated

8.13.55 TEMPHOT: Temperature Hot Status Register (offset = B5h) [reset = 0000 0000]

Asserted when an internal temperature sensor detects rise of die temperature above the HOT temperature threshold (T_{HOT}). There are 5 temperature sensors across the die.

Figure 8-88. TEMPHOT Register

Bit	7	6	5	4	3	2	1	0
Bit Name	RESERVED	RESERVED	RESERVED	DIE_HOT	VTT_HOT	TOP-RIGHT _HOT	TOP-LEFT _HOT	BOTTOM-RIGHT _HOT
TPS650864	0	0	0	0	0	0	0	0
Access	R	R	R	R/W	R/W	R/W	R/W	R/W

Table 8-82. TEMPHOT Register Descriptions

Bit	Field	Type	Reset	Description
4	DIE_HOT	R/W	0	Temperature of rest of die has exceeded T_{HOT}. **0**: Not asserted. **1**: Asserted. The host to write 1 to clear.
3	VTT_HOT	R/W	0	Temperature of VTT LDO has exceeded T_{HOT}. **0**: Not asserted. **1**: Asserted. The host to write 1 to clear.
2	TOP-RIGHT_HOT	R/W	0	Temperature of Top-Right has exceeded T_{HOT}. Top-Right corner of die from top view given pin1 is in Top-Left corner. **0**: Not asserted. **1**: Asserted. The host to write 1 to clear.
1	TOP-LEFT_HOT	R/W	0	Temperature of Top-Left has exceeded THOT. Top-Left corner of die from top view given pin1 is in Top-Left corner. **0**: Not asserted. **1**: Asserted. The host to write 1 to clear.
0	BOTTOM-RIGHT_HOT	R/W	0	Temperature of Bottom-Right has exceeded T_{HOT}. Bottom-Right corner of die from top view given pin1 is in Top-Left corner. **0**: Not asserted. **1**: Asserted. The host to write 1 to clear.

Copyright © 2022 Texas Instruments Incorporated

8.13.56 OC_STATUS: Overcurrent Fault Status Register (offset = B6h) [reset = 0000 0000]

Asserted when overcurrent condition is detected from a LSD FET.

Figure 8-89. OC_STATUS Register

Bit	7	6	5	4	3	2	1	0
Bit Name	RESERVED	RESERVED	RESERVED	RESERVED	RESERVED	BUCK6 _OC	BUCK2 _OC	BUCK1 _OC
TPS650864	0	0	0	0	0	0	0	0
Access	R	R	R	R	R	R/W	R/W	R/W

Table 8-83. OC_STATUS Register Descriptions

Bit	Field	Type	Reset	Description
2	BUCK6_OC	R/W	0	BUCK6 LSD FET overcurrent has been detected. **0**: Not asserted. **1**: Asserted. The host to write 1 to clear.
1	BUCK2_OC	R/W	0	BUCK2 LSD FET overcurrent has been detected. **0**: Not asserted. **1**: Asserted. The host to write 1 to clear.
0	BUCK1_OC	R/W	0	BUCK1 LSD FET overcurrent has been detected. **0**: Not asserted. **1**: Asserted. The host to write 1 to clear.

Copyright © 2022 Texas Instruments Incorporated

9 Applications, Implementation, and Layout

Note

Information in the following applications sections is not part of the TI component specification, and TI does not warrant its accuracy or completeness. TI's customers are responsible for determining suitability of components for their purposes, as well as validating and testing their design implementation to confirm system functionality.

9.1 Application Information

The TPS650864 for Xilinx MPSoCs and FPGAs can be used in a variety of ways which is outlined in the following sections. Section 9.2 discusses the design procedure for the general case. Specific OTP information can be found starting with Section 8.6. In general, the PMIC is controlled by the state of the six CTL which can accept up to 3.6 V inputs. How these control pins are set varies based on application. Some examples would be using the PG of external rails, looping GPOs back into CTL pins, connecting a locking push-button, using a push-button circuit, using an embedded controller (such as the msP430G2121), or controlled by the MPSoC itself.

9.2 Typical Application

This section describes the general application information and provides a more detailed description on the PMIC that powers a generic multicore-processor application. An example system block diagram for the device powering an SoC and the rest of platform is shown in Figure 9-1. The functional block diagram in Figure 8-1 outlines the typical external components necessary for proper device functionality.

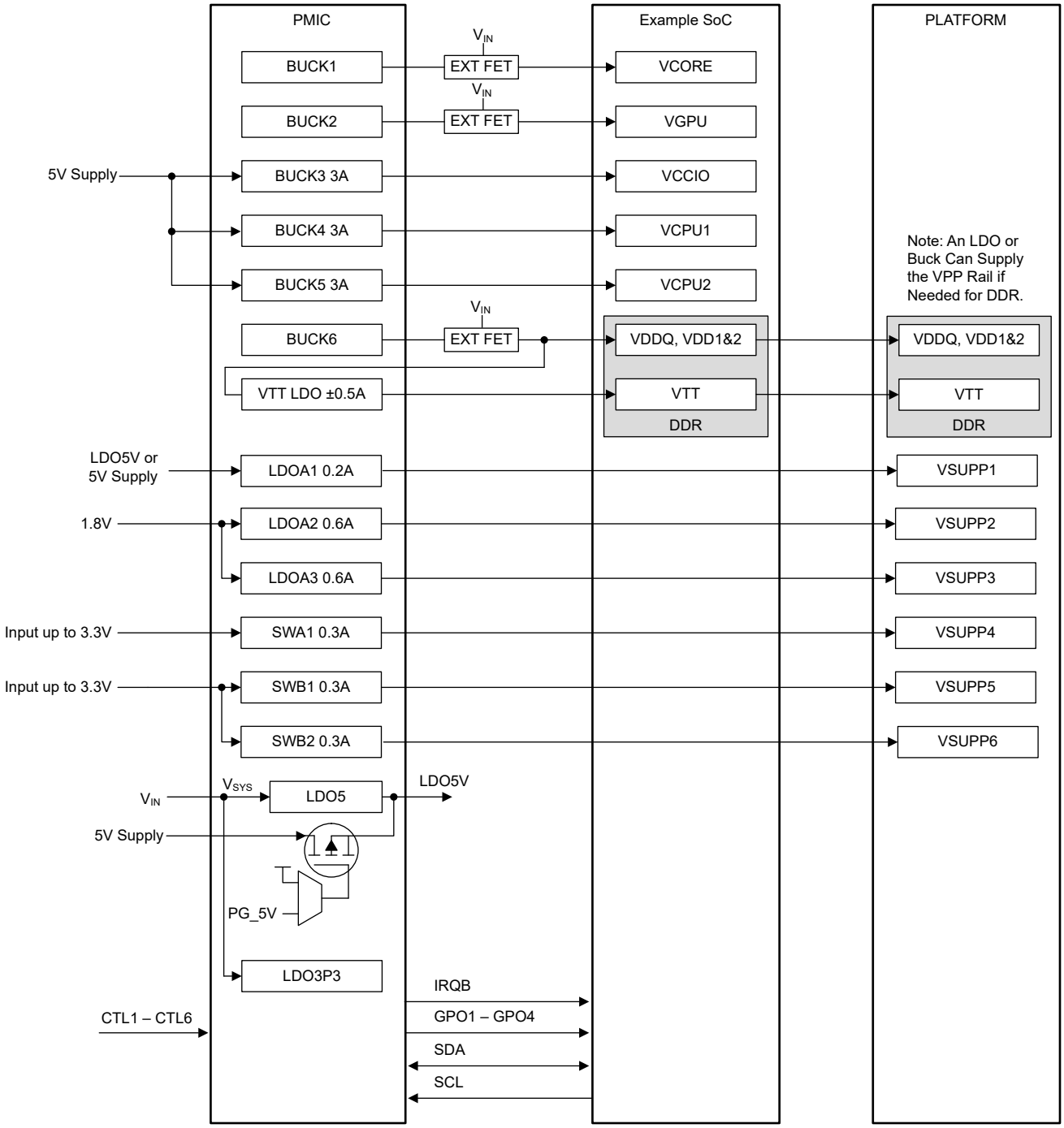

Copyright © 2017, Texas Instruments Incorporated

Figure 9-1. Typical Application Example

Copyright © 2022 Texas Instruments Incorporated

9.2.1 Design Requirements

The PMIC requires decoupling caps on the supply pins. Follow the values for recommended capacitance on these supplies given in *Section 7*. The controllers, converter, LDOs, and some other features can be adjusted to meet specific application needs. Section 9.2.2 describes how to design and adjust the external components to achieve desired performance.

9.2.2 Detailed Design Procedure

9.2.2.1 Controller Design Procedure

Designing the controller can be broken down into the following steps:

1. Design the output filter.
2. Select the FETs.
3. Select the bootstrap capacitor.
4. Select the input capacitors.
5. Set the current limits.

Controllers BUCK1, BUCK2, and BUCK6 require a 5-V supply and capacitors at their corresponding DRV5V_x_x pins. For most applications, the DRV5V_x_x input should come from the LDO5P0 pin to ensure uninterrupted supply voltage; a 2.2-µF, X5R, 20%, 10-V, or similar capacitor must be used for decoupling.

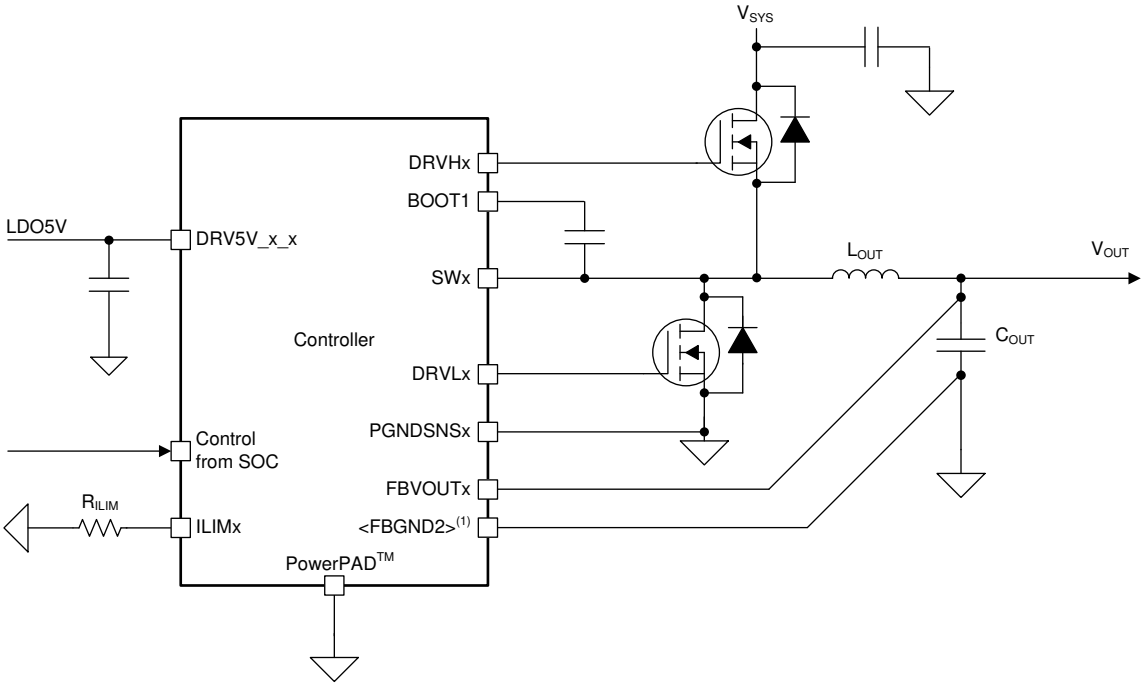

Copyright © 2017, Texas Instruments Incorporated

A. <FBGND2> is only present for BUCK2.

Figure 9-2. Controller Diagram

9.2.2.1.1 Selecting the Inductor

Placement of an inductor is required between the external FETs and the output capacitors. Together, the inductor and output capacitors make the double-pole that contributes to stability. In addition, the inductor is directly responsible for the output ripple, efficiency, and transient performance. As the inductance used increases, the ripple current decreases, which typically results in an increased efficiency. However, with an increase in inductance used, the transient performance decreases. Finally, the inductor selected must be rated for appropriate saturation current, core losses, and DC resistance (DCR).

Equation 5 shows the calculation for the recommended inductance for the controller.

$$L = \frac{V_{OUT} \times (V_{IN} - V_{OUT})}{V_{IN} \times f_{sw} \times I_{OUT(MAX)} \times K_{IND}} \tag{5}$$

where

- V_{OUT} is the typical output voltage
- V_{IN} is the typical input voltage
- f_{SW} is the typical switching frequency when loaded, 1 MHz unless otherwise noted
- $I_{OUT(MAX)}$ is the maximum load current
- K_{IND} is the ratio of $I_{Lripple}$ to the $I_{OUT(MAX)}$. For this application, TI recommends that K_{IND} is set to a value from 0.2 to 0.4. Higher values have improved transient performance, lower values have improved efficiency

With the chosen inductance value, the peak current for the inductor in steady state operation, $I_{L(max)}$, can be calculated using Equation 6. The rated saturation current of the inductor must be higher than the $I_{L(max)}$ current.

$$I_{L(MAX)} = I_{OUT(MAX)} + \frac{(V_{IN} - V_{OUT}) \times V_{OUT}}{2 \times V_{IN} \times f_{sw} \times L} \tag{6}$$

9.2.2.1.2 Selecting the Output Capacitors

TI recommends using ceramic capacitors with low ESR values to provide the lowest output voltage ripple. The output capacitor requires an X7R or an X5R dielectric. Y5V and Z5U dielectric capacitors, aside from their wide variation in capacitance over temperature, become resistive at high frequencies.

At light load currents, the controller operates in PFM mode, and the output voltage ripple is dependent on the output-capacitor value and the PFM peak inductor current. Higher output-capacitor values minimize the voltage ripple in PFM mode. To achieve specified regulation performance and low output voltage ripple, the DC-bias characteristic of ceramic capacitors must be considered. The effective capacitance of ceramic capacitors drops with increasing DC bias voltage.

TI recommends the use of small ceramic capacitors placed between the inductor and load with many vias to the PGND plane for the output capacitors of the BUCK controllers. This solution typically provides the smallest and lowest cost solution available for D-CAP2 controllers.

The selection of the output capacitor is typically driven by the output transient response. Equation 7 and Equation 8 provide a rough estimate of the minimum required capacitance to ensure proper transient response. Because the transient response is significantly affected by the board layout, some experimentation is expected in order to confirm that values derived in this section are applicable to any particular use case. These are not meant to be an absolute requirement, but rather a rough starting point. Alternatively, some known combination values from which to begin are provided in Table 9-1. V_{UNDER} and V_{OVER} values should be greater than or equal to 3% of V_{OUT} setting in order for equations to be meaningful. The equations provide some margin so that actual capacitance requirement may be lower than calculated.

$$C_{OUT} > \frac{I_{TRAN(MAX)}^{2} \times L}{(V_{IN} - V_{OUT}) \times V_{UNDER}} \tag{7}$$

where

Copyright © 2022 Texas Instruments Incorporated

- $I_{TRAN(max)}$ is the maximum load current step
- L is the chosen inductance
- V_{IN} is the maximum input voltage
- V_{OUT} is the minimum programmed output voltage
- V_{UNDER} is the maximum allowable undershoot from programmed voltage

$$C_{OUT} > \frac{I_{TRAN(MAX)}^{2} \times L}{V_{OUT} \times V_{OVER}} \tag{8}$$

where

- V_{OVER} is the maximum allowable overshoot from programmed voltage

Another key performance factor can be the ripple voltage while in pulsed frequency modulation mode, also known as discontinuous conduction mode. At light load, the controller will disable the low side FET once it detects a zero-crossing event on the inductor current. It will stay disabled until V_{OUT} crosses below the set VID threshold. This architecture allows significant power savings at light load conditions by minimizing power loss through the low side FET and through switching. The disadvantage is that there is higher voltage ripple since the ripple current is only positive. Additionally, for even higher efficiency, $T_{ON(PFM)}$ for this device is typically 80% longer than $T_{ON(PWM)}$, which can be calculated by dividing the duty cycle by the switching frequency. An estimate for the required capacitance for a given allowable ripple voltage at light load is shown in Equation 9. ESR of the output capacitor is neglected here because ceramic capacitors, which typically have low ESR, are recommended. V_{OVER} should not be set lower than 3% of V_{OUT} value.

$$C_{OUT} > \frac{T_{ON_EXT}^{2} \times V_{OUT} \times (V_{IN} - V_{OUT})}{2 \times V_{IN} \times f_{SW}^{2} \times V_{OVER} \times L} \tag{9}$$

where

- T_{ON_EXT} is the PFM on time extension constant, 1.8 unless otherwise noted in the part number specific section
- V_{OUT} is the maximum programmed output voltage
- V_{IN} is the maximum input voltage
- f_{SW} is the typical switching frequency when loaded, 1 MHz unless otherwise noted
- V_{OVER} is the maximum allowable overshoot from programmed voltage
- L is the chosen inductance

In cases where the transient current change is very low and ripple voltage allowance is large, the DC stability may become important. DCAP2 is a very stable architecture so this value is likely to be the smallest of those calculated. Equation 10 approximates the amount of capacitance necessary to maintain DC stability. Again, this is provided as a starting point; actual values will vary on a board-to-board case.

$$C_{OUT} > \frac{V_{OUT} \times 50\ \mu s}{V_{IN} \times f_{SW} \times L} \tag{10}$$

where

- V_{OUT} is the maximum programmed output voltage
- 50 µs is based on internal ramp setup
- V_{IN} is the minimum input voltage
- f_{SW} is the typical switching frequency
- L is the chosen inductance

Choosing the maximum valuable between Equation 7, Equation 8, Equation 9, and Equation 10 is recommended as a starting point to get the desired performance. All equations are estimates and have not been validated at all variable corners. Removing excess capacitance or adding extra capacitance may be necessary during board evaluation. Testing can typically be performed on the evaluation module or on prototype boards.

Copyright © 2022 Texas Instruments Incorporated

Table 9-1. Known LC Combinations for 1 µs Load Rise and Fall Time

$I_{TRAN(max)}$ (A)	L (µH)	V_{OUT} (V)	V_{UNDER} (V)	V_{OVER} (V)	C_{OUT}(µF)
3.5	0.47	1	0.05	0.05	110
4	0.47	1	0.05	0.05	220
5	0.47	1.35	0.068	0.068	220
8	0.33	1	0.05	0.06	440
20	0.22	1	0.05	0.16	550

9.2.2.1.3 Selecting the FETs

This controller is designed to drive two NMOS FETs. Typically, lower R_{DSON} values are better for improving the overall efficiency of the controller, however higher gate charge thresholds will result in lower efficiency so the two need to be balanced for optimal performance. As the R_{DSON} for the low-side FET decreases, the minimum current limit increases; therefore, ensure selection of the appropriate values for the FETs, inductor, output capacitors, and current limit resistor. TI's CSD85301Q2, CSD87331Q3D, CSD87381P, CSD87588N, and CSD87350Q5D devices are recommended for the controllers, depending on the required maximum current.

9.2.2.1.4 Bootstrap Capacitor

To ensure the internal high-side gate drivers are supplied with a stable low-noise supply voltage, a capacitor must be connected between the SWx pins and the respective BOOTx pins. TI recommends placing ceramic capacitors with the value of 0.1 µF for the controllers. During testing, a 0.1-µF, size 0402, 10-V capacitor is used for the controllers.

TI recommends reserving a small resistor in series with the bootstrap capacitor in case the turnon and turnoff of the FETs must be slowed to reduce voltage ringing on the switch node, which is a common practice for controller design.

9.2.2.1.5 Setting the Current Limit

The current-limiting resistor value must be chosen based on Equation 1.

9.2.2.1.6 Selecting the Input Capacitors

Due to the nature of the switching controller with a pulsating input current, a low ESR input capacitor is required for best input-voltage filtering and also for minimizing the interference with other circuits caused by high input-voltage spikes. For the controller, a typical 2.2-µF capacitor can be used for the DRV5V_x_x pin to handle the transients on the driver. For the FET input, 10 µF of input capacitance (after derating) is recommended for most applications. To achieve the low ESR requirement, a ceramic capacitor is recommended. However, the voltage rating and DC-bias characteristic of ceramic capacitors must be considered. For better input-voltage filtering, the input capacitor can be increased without any limit.

Note

Use the correct value for the ceramic capacitor capacitance after derating to achieve the recommended input capacitance.

TI recommends placing a ceramic capacitor as close as possible to the FET across the respective VSYS and PGND pins of the FETs. The preferred capacitors for the controllers are two Murata GRM21BR61E226ME44: 22-µF, 0805, 25-V, ±20%, or similar capacitors.

9.2.2.2 Converter Design Procedure

Designing the converter has only two steps: design the output filter and select the input capacitors.

Figure 9-3 shows a diagram of the converter.

Copyright © 2022 Texas Instruments Incorporated

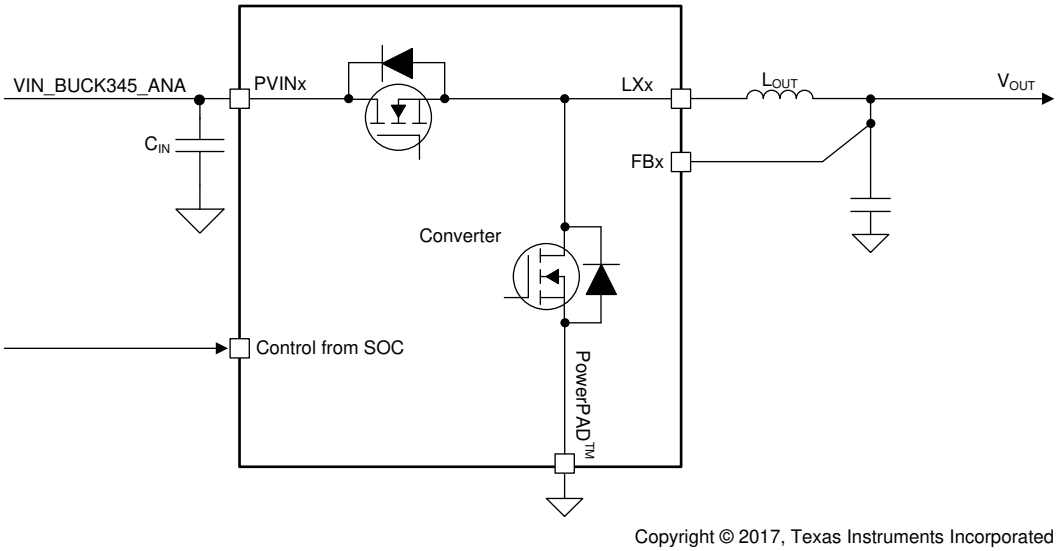

Figure 9-3. Converter Diagram

9.2.2.2.1 Selecting the Inductor

Internal parameters for the converters are optimized for either a 0.47 µH or 1 µH inductor, however it is possible to use other inductor values as long as they are chosen carefully and thoroughly tested. The equations from Section 9.2.2.1.1 can be utilized again with the parameters changed to match those of the converters. Switching frequency estimates can be found in Section 7.15.

9.2.2.2.2 Selecting the Output Capacitors

Ceramic capacitors with low ESR values are recommended because they provide the lowest output voltage ripple. The output capacitor requires either an X7R or X5R rating. Y5V and Z5U capacitors, aside from the wide variation in capacitance over temperature, become resistive at high frequencies.

At light load currents, the converter operates in PFM mode and the output voltage ripple is dependent on the output-capacitor value and the PFM peak inductor current. Higher output-capacitor values minimize the voltage ripple in PFM mode. To achieve specified regulation performance and low output voltage ripple, the DC-bias characteristic of ceramic capacitors must be considered. The effective capacitance of ceramic capacitors drops with increasing DC-bias voltage.

For the output capacitors of the BUCK converters, TI recommends placing small ceramic capacitors between the inductor and load with many vias to the PGND plane. This solution typically provides the smallest and lowest-cost solution available.

The minimum output capacitance recommended is 22 µF for stability. Equation 7 and Equation 8 can be used to estimate the required output capacitance for a given load transient. Note that V_{IN} will be different for the converters and that the switching frequency can be estimated using Section 7.15. Equation 9 can be neglected for converters as there is no on time extension and the V_{IN} - V_{OUT} term is typically smaller.

9.2.2.2.3 Selecting the Input Capacitors

Due to the nature of the switching converter with a pulsating input current, a low ESR input capacitor is required for best input-voltage filtering and for minimizing the interference with other circuits caused by high input-voltage spikes. For the PVINx pin, 2.5 µF of input capacitance (after derating) is required for most applications. A ceramic capacitor is recommended to achieve the low ESR requirement. However, the voltage rating and DC-bias characteristic of ceramic capacitors must be considered. The input capacitor can be increased without any limit for better input-voltage filtering.

Note

Use the correct value for the ceramic capacitor capacitance after derating to achieve the recommended input capacitance.

The preferred capacitor for the converters is one Samsung CL05A106MP5NUNC: 10-µF, 0402, 10-V, ±20%, or similar capacitor.

9.2.2.3 LDO Design Procedure

The VTT LDO must handle the fast load transients from the DDR memory for termination. Therefore, it is recommended to use ceramic capacitors to maintain a high amount of capacitance with low ESR on the VTT LDO outputs and inputs. The preferred output capacitors for the VTT LDO are the GRM188R60J226MEA0 from Murata (22 µF, 0603, 6.3 V, ±20%, or similar capacitors). The preferred input capacitor for the VTT LDO is the CL05A106MP5NUNC from Samsung (10-µF, 0402, 10-V, ±20%, or similar capacitor).

The remaining LDOs must have input and output capacitors chosen based on the values in Section 7.9.

9.2.3 Application Curves

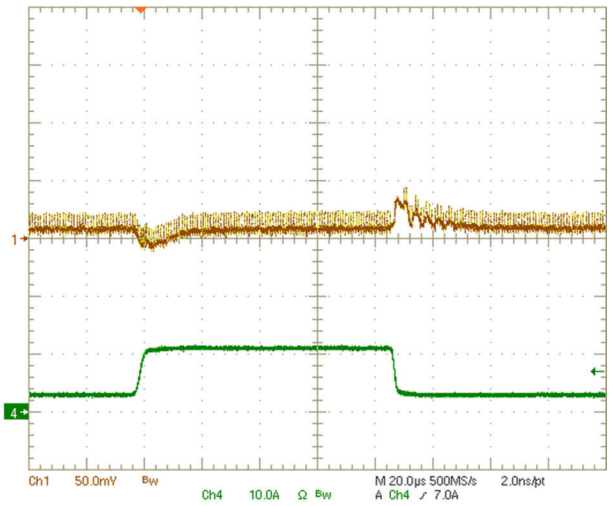

FET = CSD87588N L = PIMB062D-R22ms

C_{OUT} = 2 × 300 µF + 1 × 22 µF

Figure 9-4. BUCK2 Controller Load Transient

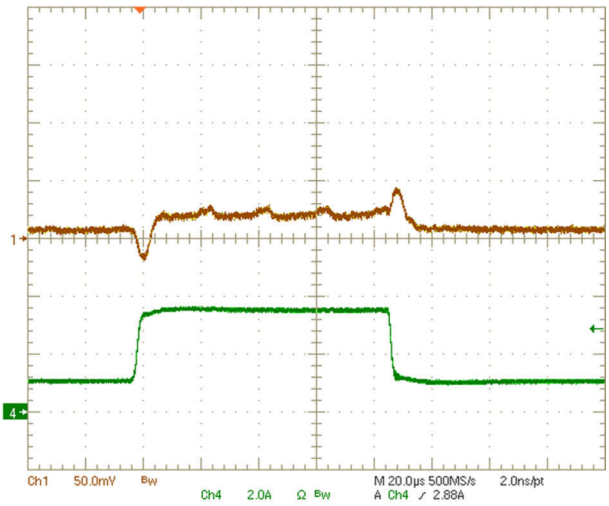

L = PIFE32251B-R47ms C_{OUT} = 4 × 22 µF

Figure 9-5. BUCK3 Converter Load Transient

Copyright © 2022 Texas Instruments Incorporated

9.2.4 Layout

9.2.4.1 Layout Guidelines

For a detailed description regarding layout recommendations, refer to the *TPS65086x Design Guide* and to the *TPS65086x Schematic and Layout Checklist*. For all switching power supplies, the layout is an important step in the design, especially at high peak currents and high switching frequencies. If the layout is not carefully done, the regulator can have stability problems and EMI issues. Therefore, use wide and short traces for the main current path and for the power ground tracks. The input capacitors, output capacitors, and inductors must be placed as close as possible to the device. Use a common-ground node for power ground and use a different, isolated node for control ground to minimize the effects of ground noise. Connect these ground nodes close to the AGND pin by one or two vias. Use of the design guide is highly encouraged in addition to the following list of other basic requirements:

- Do *not* allow the AGND, PGNDSNSx, or FBGND2 to connect to the thermal pad on the top layer.
- To ensure proper sensing based on FET R_{DSON}, PGNDSNSx must not connect to PGND until very close to the PGND pin of the FET.
- All inductors, input and output capacitors, and FETs for the converters and controller must be on the same board layer as the IC.
- To achieve the best regulation performance, place feedback connection points near the output capacitors and minimize the control feedback loop as much as possible.
- Bootstrap capacitors must be placed close to the device.
- The internal reference regulators must have their input and output capacitors placed close to the device pins.
- Route DRVHx and SWx as a differential pair. Ensure that there is a PGND path routed in parallel with DRVLx, which provides optimal driver loops.

9.2.4.2 Layout Example

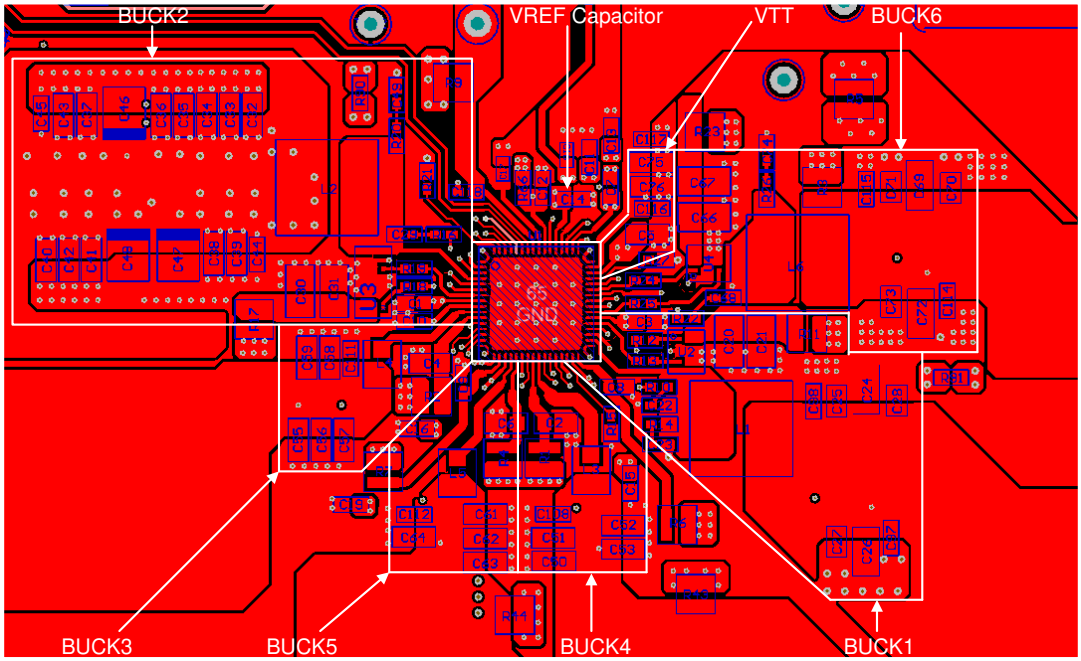

Figure 9-6. EVM Layout Example With All Components on the Top Layer

9.2.5 VIN 5-V Application

The PMIC can be operated by a 5-V input voltage to the system because the power path of the controller does not go through the device itself. The concept is simple: supply the controller VINs with the 5-V input, and supply the VSYS with a 5.8-V step-up of the 5 V with a boost or charge pump. The 5.8 V is recommended because the UVLO of the internal LDO5 is at 5.6 V and the device measures the voltage at VSYS and determines the optimum internal compensation and controller settings thus, it is ideal the VSYS be close to the VIN of the controllers.

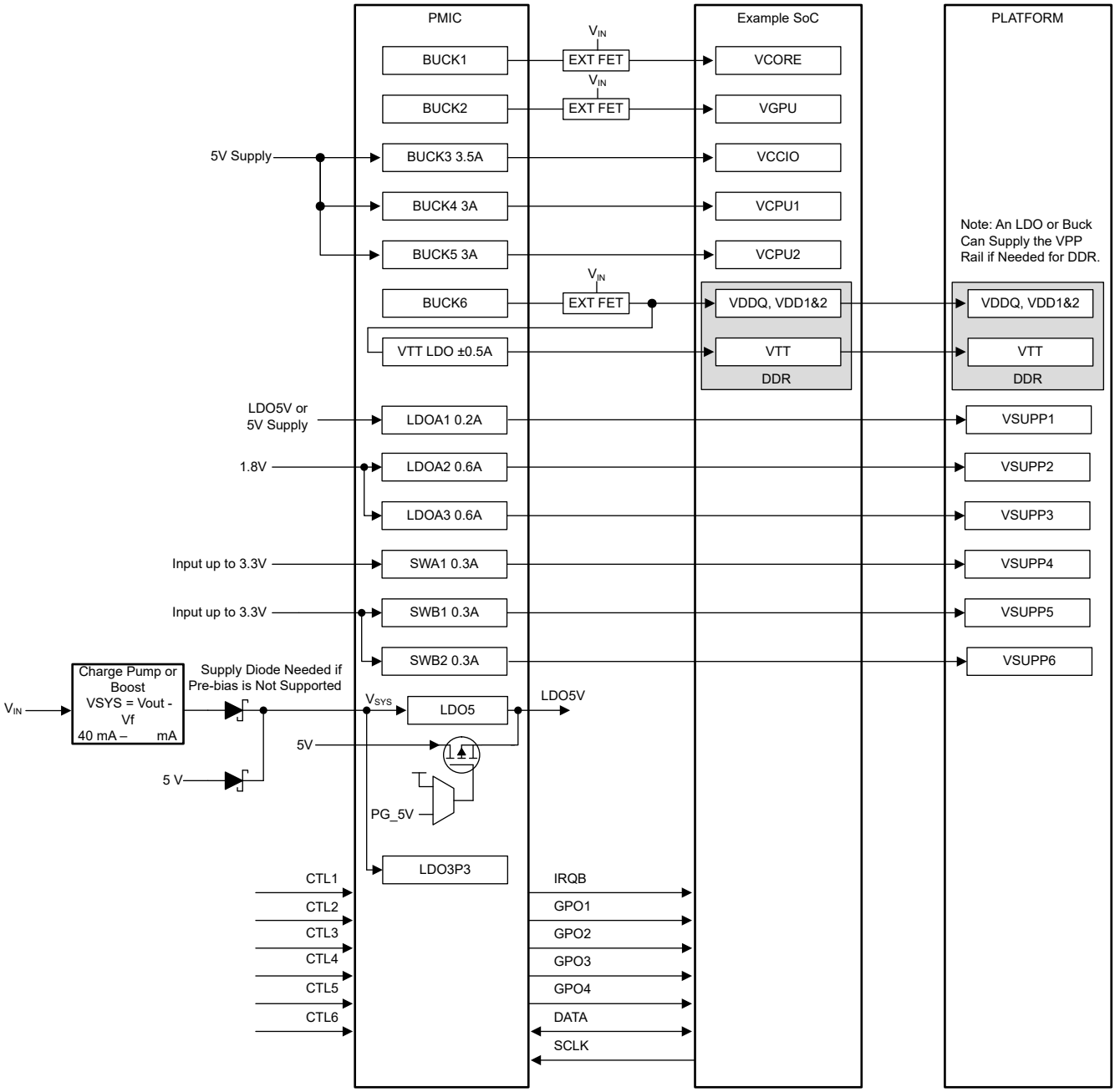

Copyright © 2017, Texas Instruments Incorporated

Figure 9-7. VIN 5-V Application

Copyright © 2022 Texas Instruments Incorporated

9.2.5.1 Design Requirements

The PMIC requires a step-up voltage from the 5-V input to 5.8 V for the VSYS supply. TI recommends keeping the VSYS near 5.8 V for optimization of the controllers.

Depending on the application use cases, the supply current to the VSYS can require from 40 mA with the drivers being supplied by the 5-V input to 440 mA with the drivers being supplied by the LDO5 and the LDOA1 being operated at max loading. This means that a charge pump may be used in some applications like the 5-V input but in others, a small boost may be required.

A Schottky diode from the 5-V input to the VSYS is recommended to ensure the VSYS is biased and the internal reference LDOs are on before the step-up regulator is enabled or fully ramped up. If the step-up cannot tolerate pre-bias condition then, 2 diodes may be needed to prevent the initial 5-V supply biasing the output of the step-up.

9.2.5.2 Design Procedure

To design a 5-V input application, first provide a step-up voltage from the 5-V input to the VSYS. Design the step-up to output a voltage near 5.8 V. Next, route the 5-V input to the controller and converter VINs. Thus, all power paths (*all high currents*) are routed through the controllers or directly to the converters. None of the high currents are required from the step-up supply. After the input stage is complete, the rest of the system can be designed as normal following the typical application procedure, using 5 V as the input value to the controllers.

9.2.5.3 Application Curves

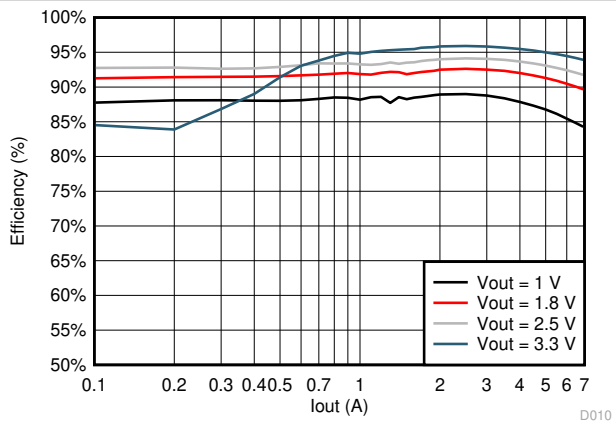

FET = CSD87381P L = PIMB061H-R47 ms

Figure 9-8. BUCK1 Efficiency at V_{IN} = 5 V

9.3 Power Supply Coupling and Bulk Capacitors

This device is designed to work with several different input voltages. The minimum voltage on the VSYS pin is 5.6 V for the device to start up; however, this is a low power rail. The input to the FETs must be from 4.5 V to 21 V as long as the proper BOM choices are made. Input to the converters should be between 3.3 V and 5 V. For the device to output maximum power, the input power must be sufficient. For the controllers, VIN must be able to supply sufficient input current for the output power of the application. For the converters, PVINx must be able to typically supply 2 A.

A best practice here is to determine power usage by the system and back-calculate the necessary power input based on expected efficiency values.

9.4 Do's and Don'ts

- Connect the LDO5V output to the DRV5V_x_x inputs for situations where an external 5-V supply is not initially available or is not available the entire time PMIC is on. If the external 5-V supply is always present, then DRV5V_x_x can be directly connected to remove the V5ANA-to-LDO5P0 load switch R_{DSON}.
- Ensure that none of the control pins are potentially floating.
- Include 0-Ω resistors on the DRVH or BOOT pins of controllers on prototype boards, which allows for slowing the controllers if the system is unable to handle the noise generated by the large switching or if switching voltage is too large due to layout.
- Do **not** connect the V5ANA power input to a different source other than PVINx. A mismatch here causes reference circuits to regulate incorrectly.
- Do **not** supply the V5ANA power input before the VSYS. Reference biasing of the internal FETs may turn on the HS FET passing the input to the output until VSYS is biased.
- Do **not** change the values of the reserved bits when writing I^2C. This can have unexpected consequences. Expected values for each OTP are shown in the register map.

Copyright © 2022 Texas Instruments Incorporated

10 Device and Documentation Support

10.1 Device Support

10.1.1 Third-Party Products Disclaimer

TI'S PUBLICATION OF INFORMATION REGARDING THIRD-PARTY PRODUCTS OR SERVICES DOES NOT CONSTITUTE AN ENDORSEMENT REGARDING THE SUITABILITY OF SUCH PRODUCTS OR SERVICES OR A WARRANTY, REPRESENTATION OR ENDORSEMENT OF SUCH PRODUCTS OR SERVICES, EITHER ALONE OR IN COMBINATION WITH ANY TI PRODUCT OR SERVICE.

10.1.2 Development Support

For documentation related to device development see the following:

- Texas Instruments, *TPS65086x Schematic and Layout Checklist*
- Texas Instruments, *TPS65086x Design Guide*

10.2 Documentation Support

10.2.1 Related Documentation

For related documentation see the following:

- Texas Instruments, *CSD85301Q2 20 V Dual N-Channel NexFET™ Power MOSFETs* data sheet
- Texas Instruments, *CSD87331Q3D Synchronous Buck NexFET™ Power Block* data sheet
- Texas Instruments, *CSD87588N Synchronous Buck NexFET™ Power Block II* data sheet
- Texas Instruments, *CSD87381P Synchronous Buck NexFET™ Power Block II* data sheet
- Texas Instruments, *CSD87350Q5D Synchronous Buck NexFET™ Power Block* data sheet
- Texas Instruments, *MSP430G2121 Mixed Signal Microcontroller* data sheet
- Texas Instruments, *Power management integrated buck controllers for distant point-of-load applications* white paper
- Texas Instruments, *TPS65086x Evaluation Module* user's guide

10.3 Receiving Notification of Documentation Updates

To receive notification of documentation updates, navigate to the device product folder on ti.com. Click on *Subscribe to updates* to register and receive a weekly digest of any product information that has changed. For change details, review the revision history included in any revised document.

10.4 Support Resources

TI E2E™ support forums are an engineer's go-to source for fast, verified answers and design help — straight from the experts. Search existing answers or ask your own question to get the quick design help you need.

Linked content is provided "AS IS" by the respective contributors. They do not constitute TI specifications and do not necessarily reflect TI's views; see TI's Terms of Use.

10.5 Trademarks

D-CAP2™, D-CAP™, and NexFET™ are trademarks of Texas Instruments.
NXP™ is a trademark of NXP Semiconductors.
TI E2E™ is a trademark of Texas Instruments.
Xilinx® and Zynq® are registered trademarks of Xilinx.
All trademarks are the property of their respective owners.

10.6 Electrostatic Discharge Caution

This integrated circuit can be damaged by ESD. Texas Instruments recommends that all integrated circuits be handled with appropriate precautions. Failure to observe proper handling and installation procedures can cause damage.

ESD damage can range from subtle performance degradation to complete device failure. Precision integrated circuits may be more susceptible to damage because very small parametric changes could cause the device not to meet its published specifications.

10.7 Glossary

TI Glossary This glossary lists and explains terms, acronyms, and definitions.

11 Mechanical, Packaging, and Orderable Information

The following pages include mechanical, packaging, and orderable information. This information is the most current data available for the designated devices. This data is subject to change without notice and revision of this document. For browser-based versions of this data sheet, refer to the left-hand navigation.

Copyright © 2022 Texas Instruments Incorporated

PACKAGING INFORMATION

Orderable Device	Status (1)	Package Type	Package Drawing	Pins	Package Qty	Eco Plan (2)	Lead finish/ Ball material (6)	MSL Peak Temp (3)	Op Temp (°C)	Device Marking (4/5)	Samples
TPS65086401RSKR	ACTIVE	VQFN	RSK	64	2000	RoHS & Green	NIPDAU	Level-3-260C-168 HR	-40 to 85	T65086401 PG1.0	Samples
TPS65086401RSKT	ACTIVE	VQFN	RSK	64	250	RoHS & Green	NIPDAU	Level-3-260C-168 HR	-40 to 85	T65086401 PG1.0	Samples
TPS6508640RSKR	ACTIVE	VQFN	RSK	64	2000	RoHS & Green	NIPDAU	Level-3-260C-168 HR	-40 to 85	T6508640 PG1.0	Samples
TPS6508640RSKT	ACTIVE	VQFN	RSK	64	250	RoHS & Green	NIPDAU	Level-3-260C-168 HR	-40 to 85	T6508640 PG1.0	Samples
TPS6508641RSKR	ACTIVE	VQFN	RSK	64	2000	RoHS & Green	NIPDAU	Level-3-260C-168 HR	-40 to 85	T6508641 PG1.0	Samples
TPS6508641RSKT	ACTIVE	VQFN	RSK	64	250	RoHS & Green	NIPDAU	Level-3-260C-168 HR	-40 to 85	T6508641 PG1.0	Samples
TPS65086470RSKR	ACTIVE	VQFN	RSK	64	2000	RoHS & Green	NIPDAU	Level-3-260C-168 HR	-40 to 85	T65086470 PG1.0	Samples
TPS65086470RSKT	ACTIVE	VQFN	RSK	64	250	RoHS & Green	NIPDAU	Level-3-260C-168 HR	-40 to 85	T65086470 PG1.0	Samples

(1) The marketing status values are defined as follows:
ACTIVE: Product device recommended for new designs.
LIFEBUY: TI has announced that the device will be discontinued, and a lifetime-buy period is in effect.
NRND: Not recommended for new designs. Device is in production to support existing customers, but TI does not recommend using this part in a new design.
PREVIEW: Device has been announced but is not in production. Samples may or may not be available.
OBSOLETE: TI has discontinued the production of the device.

(2) **RoHS:** TI defines "RoHS" to mean semiconductor products that are compliant with the current EU RoHS requirements for all 10 RoHS substances, including the requirement that RoHS substance do not exceed 0.1% by weight in homogeneous materials. Where designed to be soldered at high temperatures, "RoHS" products are suitable for use in specified lead-free processes. TI may reference these types of products as "Pb-Free".
RoHS Exempt: TI defines "RoHS Exempt" to mean products that contain lead but are compliant with EU RoHS pursuant to a specific EU RoHS exemption.
Green: TI defines "Green" to mean the content of Chlorine (Cl) and Bromine (Br) based flame retardants meet JS709B low halogen requirements of <=1000ppm threshold. Antimony trioxide based flame retardants must also meet the <=1000ppm threshold requirement.

(3) MSL, Peak Temp. - The Moisture Sensitivity Level rating according to the JEDEC industry standard classifications, and peak solder temperature.

(4) There may be additional marking, which relates to the logo, the lot trace code information, or the environmental category on the device.

(5) Multiple Device Markings will be inside parentheses. Only one Device Marking contained in parentheses and separated by a "~" will appear on a device. If a line is indented then it is a continuation of the previous line and the two combined represent the entire Device Marking for that device.

(6) Lead finish/Ball material - Orderable Devices may have multiple material finish options. Finish options are separated by a vertical ruled line. Lead finish/Ball material values may wrap to two lines if the finish value exceeds the maximum column width.

Important Information and Disclaimer: The information provided on this page represents TI's knowledge and belief as of the date that it is provided. TI bases its knowledge and belief on information provided by third parties, and makes no representation or warranty as to the accuracy of such information. Efforts are underway to better integrate information from third parties. TI has taken and continues to take reasonable steps to provide representative and accurate information but may not have conducted destructive testing or chemical analysis on incoming materials and chemicals. TI and TI suppliers consider certain information to be proprietary, and thus CAS numbers and other limited information may not be available for release.

In no event shall TI's liability arising out of such information exceed the total purchase price of the TI part(s) at issue in this document sold by TI to Customer on an annual basis.

TAPE AND REEL INFORMATION

REEL DIMENSIONS

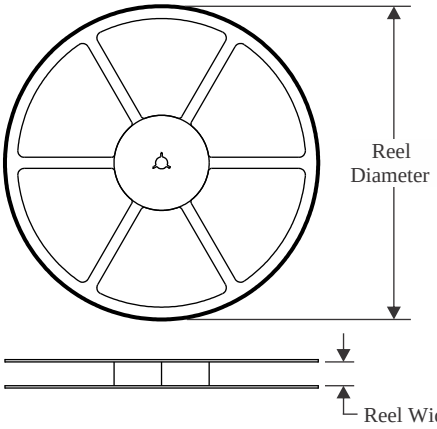

TAPE DIMENSIONS

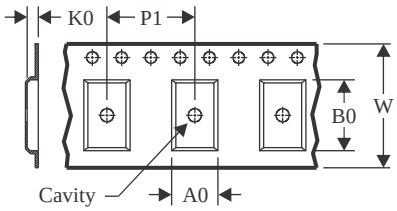

A0	Dimension designed to accommodate the component width
B0	Dimension designed to accommodate the component length
K0	Dimension designed to accommodate the component thickness
W	Overall width of the carrier tape
P1	Pitch between successive cavity centers

QUADRANT ASSIGNMENTS FOR PIN 1 ORIENTATION IN TAPE

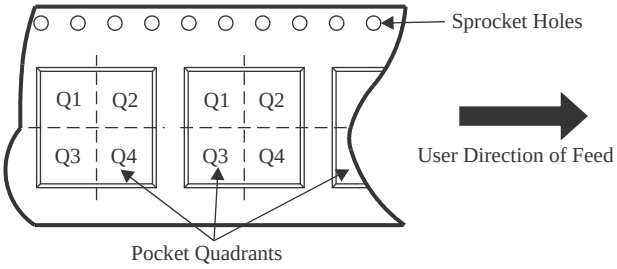

*All dimensions are nominal

Device	Package Type	Package Drawing	Pins	SPQ	Reel Diameter (mm)	Reel Width W1 (mm)	A0 (mm)	B0 (mm)	K0 (mm)	P1 (mm)	W (mm)	Pin1 Quadrant
TPS65086401RSKR	VQFN	RSK	64	2000	330.0	16.4	8.3	8.3	1.1	12.0	16.0	Q2
TPS65086401RSKT	VQFN	RSK	64	250	180.0	16.4	8.3	8.3	1.1	12.0	16.0	Q2
TPS6508640RSKR	VQFN	RSK	64	2000	330.0	16.4	8.3	8.3	1.1	12.0	16.0	Q2
TPS6508640RSKT	VQFN	RSK	64	250	180.0	16.4	8.3	8.3	1.1	12.0	16.0	Q2
TPS6508641RSKR	VQFN	RSK	64	2000	330.0	16.4	8.3	8.3	1.1	12.0	16.0	Q2
TPS6508641RSKT	VQFN	RSK	64	250	180.0	16.4	8.3	8.3	1.1	12.0	16.0	Q2
TPS65086470RSKR	VQFN	RSK	64	2000	330.0	16.4	8.3	8.3	1.1	12.0	16.0	Q2
TPS65086470RSKT	VQFN	RSK	64	250	180.0	16.4	8.3	8.3	1.1	12.0	16.0	Q2

TAPE AND REEL BOX DIMENSIONS

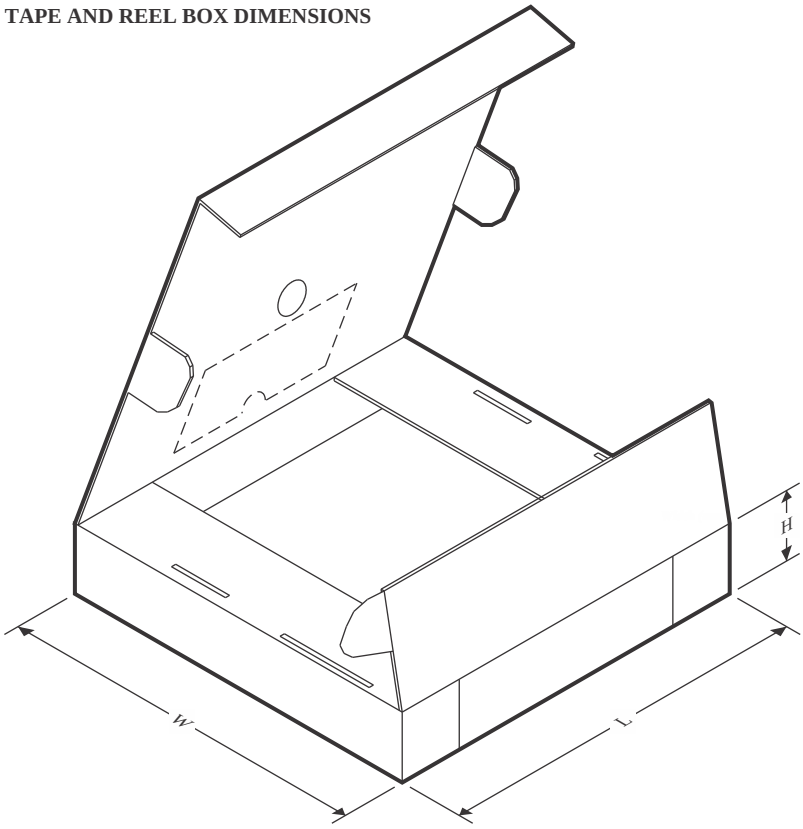

*All dimensions are nominal

Device	Package Type	Package Drawing	Pins	SPQ	Length (mm)	Width (mm)	Height (mm)
TPS65086401RSKR	VQFN	RSK	64	2000	367.0	367.0	38.0
TPS65086401RSKT	VQFN	RSK	64	250	210.0	185.0	35.0
TPS6508640RSKR	VQFN	RSK	64	2000	367.0	367.0	38.0
TPS6508640RSKT	VQFN	RSK	64	250	210.0	185.0	35.0
TPS6508641RSKR	VQFN	RSK	64	2000	367.0	367.0	38.0
TPS6508641RSKT	VQFN	RSK	64	250	210.0	185.0	35.0
TPS65086470RSKR	VQFN	RSK	64	2000	367.0	367.0	38.0
TPS65086470RSKT	VQFN	RSK	64	250	210.0	185.0	35.0

RSK (S–PVQFN–N64) PLASTIC QUAD FLATPACK NO–LEAD

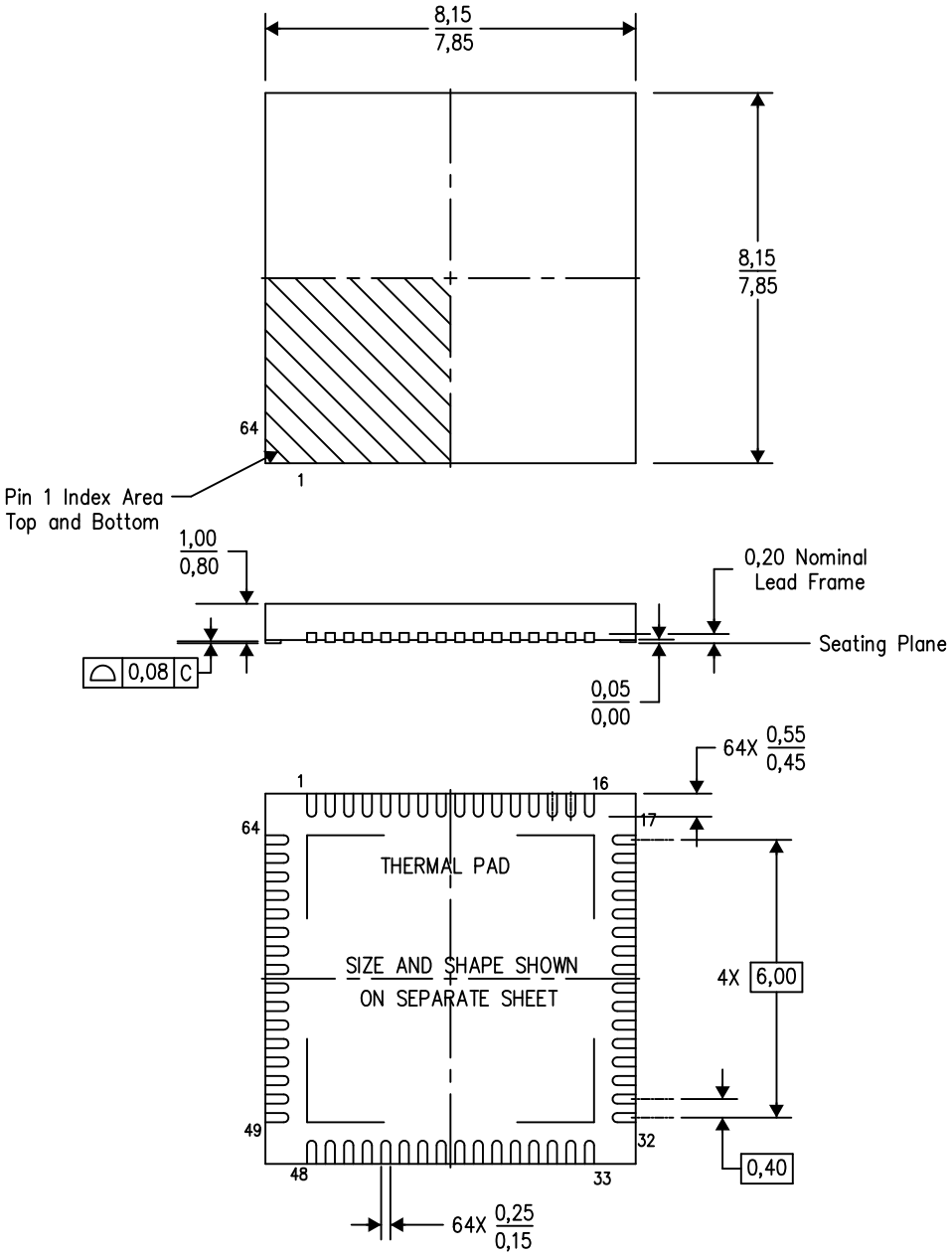

Bottom View

4207547/C 04/12

NOTES:
A. All linear dimensions are in millimeters. Dimensioning and tolerancing per ASME Y14.5–1994.
B. This drawing is subject to change without notice.
C. QFN (Quad Flatpack No–Lead) Package configuration.
D. The package thermal pad must be soldered to the board for thermal and mechanical performance.
E. See the additional figure in the Product Data Sheet for details regarding the exposed thermal pad features and dimensions.

RSK (S–PVQFN–N64) PLASTIC QUAD FLATPACK NO–LEAD

THERMAL INFORMATION

This package incorporates an exposed thermal pad that is designed to be attached directly to an external heatsink. The thermal pad must be soldered directly to the printed circuit board (PCB). After soldering, the PCB can be used as a heatsink. In addition, through the use of thermal vias, the thermal pad can be attached directly to the appropriate copper plane shown in the electrical schematic for the device, or alternatively, can be attached to a special heatsink structure designed into the PCB. This design optimizes the heat transfer from the integrated circuit (IC).

For information on the Quad Flatpack No–Lead (QFN) package and its advantages, refer to Application Report, QFN/SON PCB Attachment, Texas Instruments Literature No. SLUA271. This document is available at www.ti.com.

The exposed thermal pad dimensions for this package are shown in the following illustration.

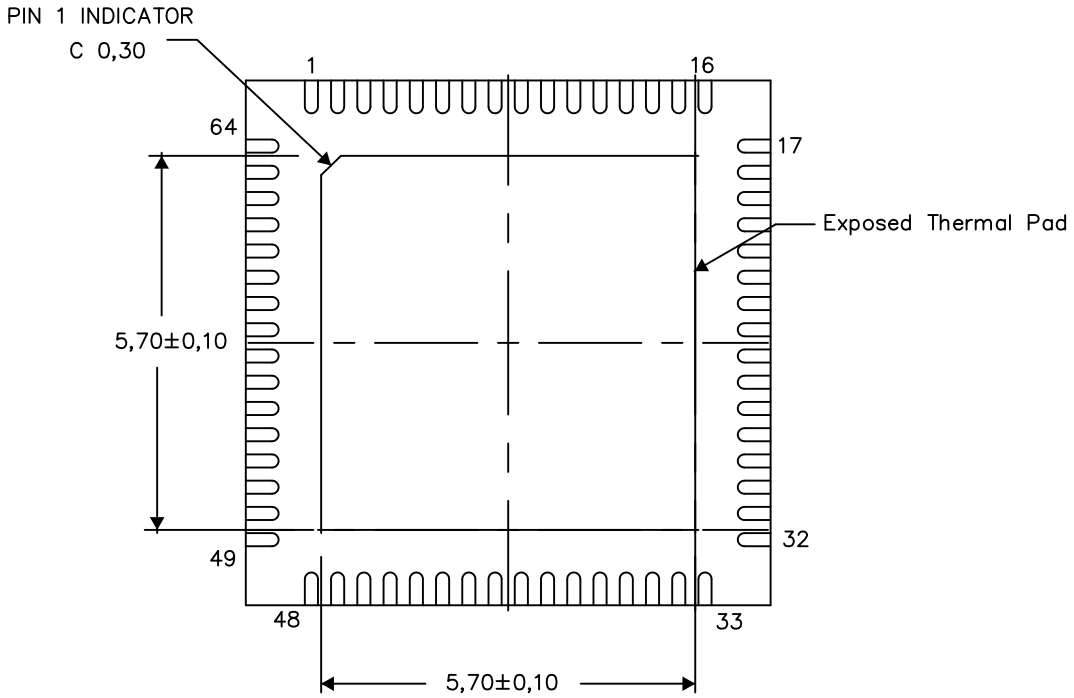

Bottom View

Exposed Thermal Pad Dimensions

4208001–5/H 08/14

NOTE: A. All linear dimensions are in millimeters

RSK (S–PVQFN–N64) PLASTIC QUAD FLATPACK NO–LEAD

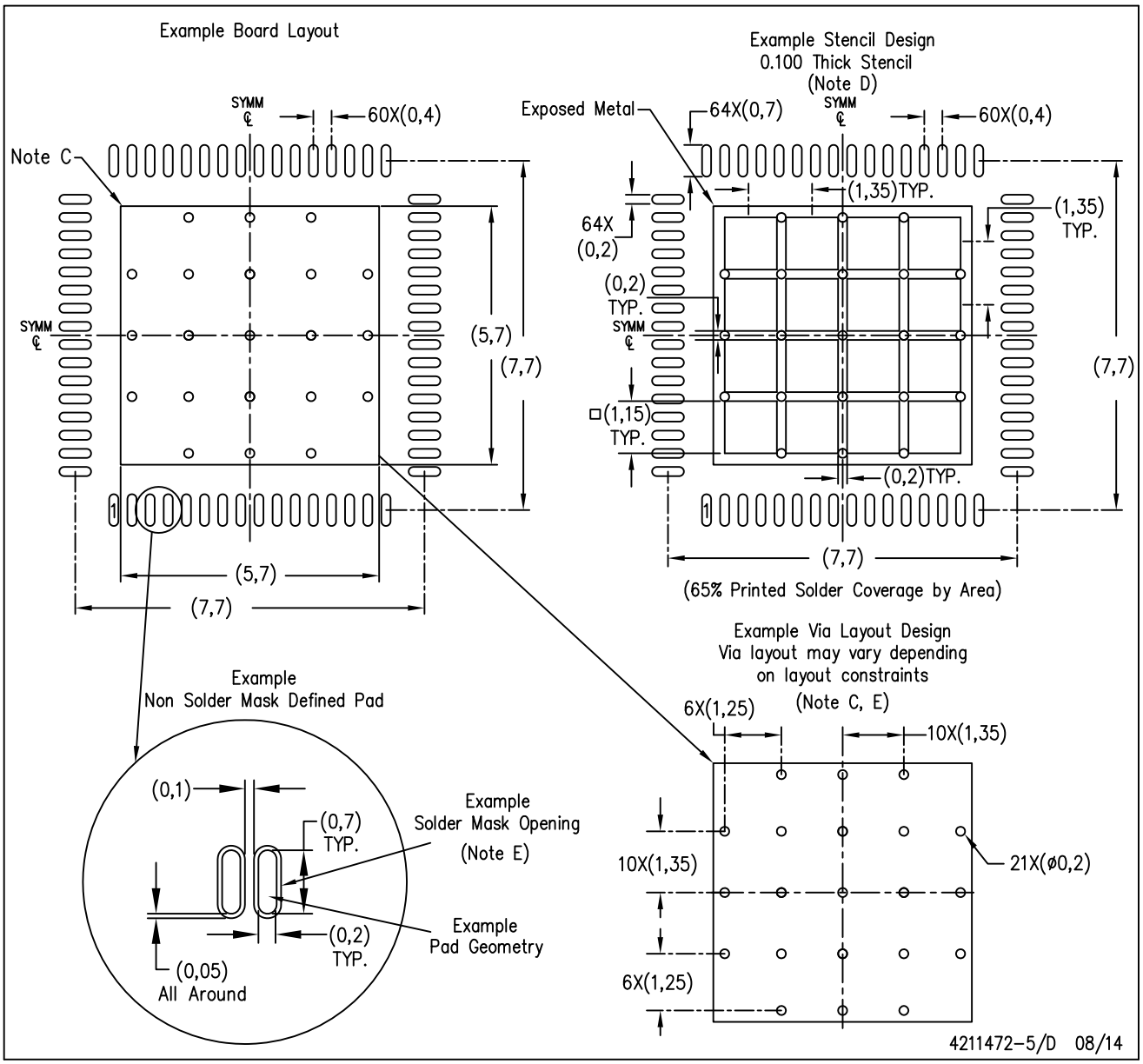

NOTES:
- A. All linear dimensions are in millimeters.
- B. This drawing is subject to change without notice.
- C. This package is designed to be soldered to a thermal pad on the board. Refer to Application Note, Quad Flat–Pack Packages, Texas Instruments Literature No. SCBA017, SLUA271, and also the Product Data Sheets for specific thermal information, via requirements, and recommended board layout. These documents are available at www.ti.com <http://www.ti.com>.
- D. Laser cutting apertures with trapezoidal walls and also rounding corners will offer better paste release. Customers should contact their board assembly site for stencil design recommendations. Refer to IPC 7525 for stencil design considerations.
- E. Customers should contact their board fabrication site for recommended solder mask tolerances and via tenting recommendations for any larger diameter vias placed in the thermal pad.

IMPORTANT NOTICE AND DISCLAIMER

TI PROVIDES TECHNICAL AND RELIABILITY DATA (INCLUDING DATA SHEETS), DESIGN RESOURCES (INCLUDING REFERENCE DESIGNS), APPLICATION OR OTHER DESIGN ADVICE, WEB TOOLS, SAFETY INFORMATION, AND OTHER RESOURCES “AS IS” AND WITH ALL FAULTS, AND DISCLAIMS ALL WARRANTIES, EXPRESS AND IMPLIED, INCLUDING WITHOUT LIMITATION ANY IMPLIED WARRANTIES OF MERCHANTABILITY, FITNESS FOR A PARTICULAR PURPOSE OR NON-INFRINGEMENT OF THIRD PARTY INTELLECTUAL PROPERTY RIGHTS.

These resources are intended for skilled developers designing with TI products. You are solely responsible for (1) selecting the appropriate TI products for your application, (2) designing, validating and testing your application, and (3) ensuring your application meets applicable standards, and any other safety, security, regulatory or other requirements.

These resources are subject to change without notice. TI grants you permission to use these resources only for development of an application that uses the TI products described in the resource. Other reproduction and display of these resources is prohibited. No license is granted to any other TI intellectual property right or to any third party intellectual property right. TI disclaims responsibility for, and you will fully indemnify TI and its representatives against, any claims, damages, costs, losses, and liabilities arising out of your use of these resources.

TI’s products are provided subject to TI’s Terms of Sale or other applicable terms available either on ti.com or provided in conjunction with such TI products. TI’s provision of these resources does not expand or otherwise alter TI’s applicable warranties or warranty disclaimers for TI products.

TI objects to and rejects any additional or different terms you may have proposed.

Mailing Address: Texas Instruments, Post Office Box 655303, Dallas, Texas 75265
Copyright © 2024, Texas Instruments Incorporated

Looking for pricing, stock, or lifecycle information?

Click below to explore more details on WIN SOURCE:

- View TPS65086470RSKT on WIN SOURCE
- Texas Instruments Information

Optimize Your Supply Chain with WIN SOURCE Solutions

- Global Sourcing Solution
- Obsolete Management
- Cost Control Management
- Shortage Management
- Alternative Solution
- Excess Inventory Management