THE DATASHEET OF

TLE42702DATMA1

www.win-source.net 0086-755-83957316

OPTIREG™ Linear TLE4270-2

5-V low drop fixed voltage regulator

AEC Qualified RoHS

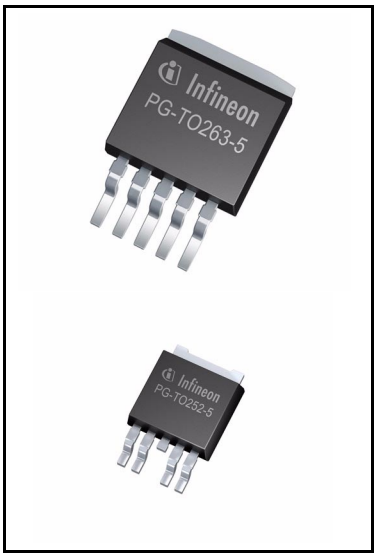

Features

- Output voltage tolerance ≤ ±2%
- 650 mA output current capability
- Low-drop voltage
- Reset functionality
- Adjustable reset time
- Suitable for use in automotive electronics
- Integrated overtemperature protection
- Reverse polarity protection
- Input voltage up to 42 V
- Overvoltage protection up to 65 V (≤ 400 ms)
- Short-circuit proof
- Wide temperature range
- ESD protection: ±2 kV HBM[1)]
- Green Product (RoHS compliant)

Potential applications

General automotive applications.

Product validation

Qualified for automotive applications. Product validation according to AEC-Q100.

Description

The OPTIREG™ Linear TLE4270-2 is a 5-V low drop fixed-voltage regulator. The maximum input voltage is 42 V (65 V, ≤ 400 ms). Up to an input voltage of 26 V and for an output current up to 650 mA it regulates the output voltage within a 2% accuracy. The short circuit protection limits the output current of more than 650 mA. The device incorporates overvoltage protection and a temperature protection which turns off the device at high temperatures.

1) ESD susceptibility, Human Body Model (HBM) according to EIA/JESD 22-A114B.

Type	Package	Marking
TLE4270-2G	P-TO263-5	4270-2G
TLE4270-2D	P-TO252-5	4270-2D

Table of contents

Features 1
Potential applications 1
Product validation 1
Description 1
Table of contents 3
1 Block diagram 4
2 Pin configuration 5
2.1 Pin assignment 5
2.2 Pin definitions and functions 5
3 General product characteristics 6
3.1 Absolute maximum ratings 6
3.2 Functional range 6
3.3 Thermal resistance 7
4 Functional description 8
4.1 Circuit description 8
4.2 Electrical characteristics 8
4.3 Typical performance graphs 10
5 Application information 13
5.1 Design notes for external components 13
5.2 Reset circuitry 14
5.3 Reset timing 14
6 Package information 15
7 Revision history 16

1 Block diagram

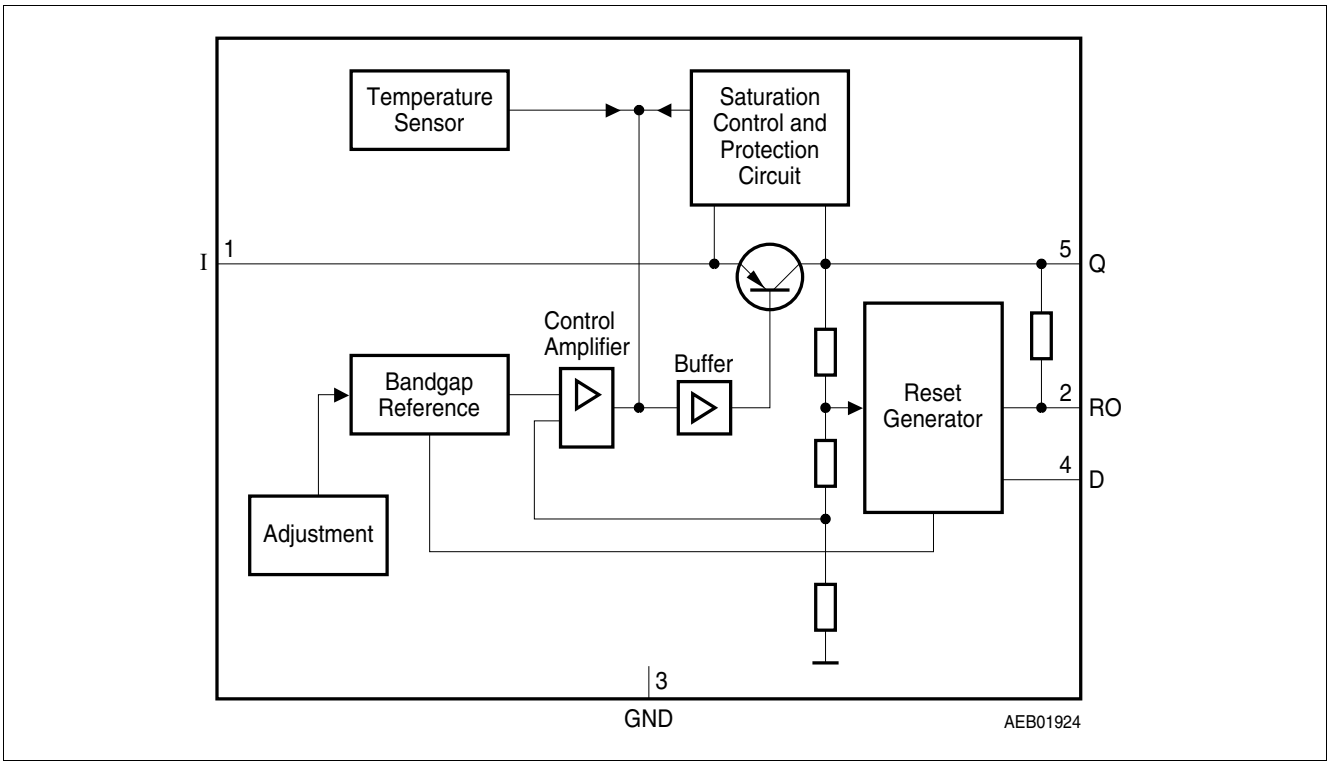

Figure 1 Block diagram

2 Pin configuration

2.1 Pin assignment

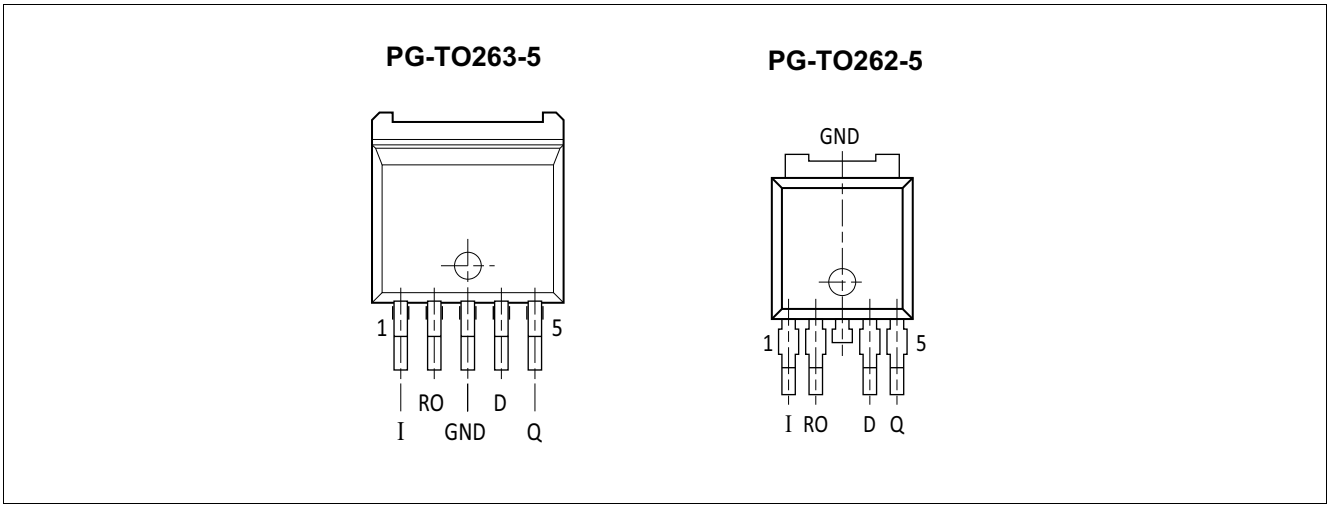

Figure 2 **Pin configuration** (top view)

2.2 Pin definitions and functions

Pin	Symbol	Function
1	I	**Input;** block to ground directly at the IC with a ceramic capacitor.
2	RO	**Reset output;** the open collector output is connected to the 5-V output via an integrated resistor of 30 kΩ.
3	GND	**Ground;** internally connected to heatsink.
4	D	**Reset delay;** connect a capacitor to ground for delay time adjustment.
5	Q	**5-V output;** block to ground with 22 µF capacitor, ESR < 3 Ω.

3 General product characteristics

3.1 Absolute maximum ratings

Table 1 Absolute maximum ratings

T_j = -40 to 150°C

Parameter	Symbol	Values			Unit	Note or Test Condition	Number
		Min.	Typ.	Max.			
Input I							
Voltage	V_I	-42	–	42	V	–	P_3.1.1
Voltage	V_I	–	–	65	V	$t \leq 400$ ms	P_3.1.2
Current	I_I	–	–	–	–	Internally limited	P_3.1.3
Reset output RO							
Voltage	V_{RO}	-0.3	–	7	V	–	P_3.1.4
Current	I_{RO}	–	–	–	–	Internally limited	P_3.1.5
Reset delay D							
Voltage	V_D	-0.3	–	7	V	–	P_3.1.6
Current	I_D	–	–	–	–	Internally limited	P_3.1.7
Output Q							
Voltage	V_Q	-1.0	–	16	V	–	P_3.1.8
Current	I_Q	–	–	–	–	Internally limited	P_3.1.9
Ground GND							
Current	I_{GND}	-0.5	–	–	A	–	P_3.1.10
Temperatures							
Junction temperature	T_j	–	–	150	°C	–	P_3.1.11
Storage temperature	T_{stg}	-50	–	150	°C	–	P_3.1.12

3.2 Functional range

Table 2 Functional range

Parameter	Symbol	Values			Unit	Note or Test Condition	Number
		Min.	Typ.	Max.			
Input voltage	V_I	6	–	42	V	–	P_3.2.1
Junction temperature	T_j	-40	–	150	°C	–	P_3.2.2

3.3 Thermal resistance

Table 3 Thermal resistance

Parameter	Symbol	Values			Unit	Note or Test Condition	Number
		Min.	Typ.	Max.			
Thermal resistance							
Junction ambient	R_{thJA}	–	–	65	K/W	TO263,[1] TO252 [1]	P_3.3.1
		–	–	79	K/W		P_3.3.2
Junction case	R_{thJC}	–	–	3	K/W	TO-263 Packages	P_3.3.3

1) Mounted on PCB, 80 × 80 × 1.5 mm^3; 35 µ Cu; 5 µ Sn; footprint only; zero airflow.

4 Functional description

4.1 Circuit description

The control amplifier compares a reference voltage, which is kept highly accurate by resistance adjustment, to a voltage that is proportional to the output voltage and drives the base of a series transistor via a buffer. Saturation control as a function of the load current prevents any over-saturation of the power element.

The IC also incorporates a number of internal circuits for protection against:

- Overload
- Overvoltage
- Overtemperature
- Reverse polarity

4.2 Electrical characteristics

Table 4 Electrical characteristics

V_I = 13.5 V; T_j = -40 to 125°C (unless otherwise specified)

Parameter	Symbol	Values			Unit	Note or Test Condition	Number
		Min.	Typ.	Max.			
Output voltage	V_Q	4.90	5.00	5.10	V	5 mA ≤ I_Q ≤ 550 mA; 6 V ≤ V_I ≤ 26 V	P_4.0.1
	V_Q	4.90	5.00	5.10	V	26 V ≤ V_I ≤ 36 V; I_Q ≤ 300 mA	P_4.0.2
Output current limiting	I_{Qmax}	650	850	–	mA	V_Q = 0 V	P_4.0.3
Current consumption $I_q = I_I - I_Q$	I_q	–	1	1.5	mA	I_Q = 5 mA	P_4.0.4
	I_q	–	55	75	mA	I_Q = 550 mA	P_4.0.5
	I_q	–	70	90	mA	I_Q = 550 mA; V_I = 5 V	P_4.0.6
Drop voltage	V_{DR}	–	350	700	mV	I_Q = 550 mA[1)]	P_4.0.7
Load regulation	$\Delta V_{Q,Lo}$	–	25	50	mV	I_Q = 5 to 550 mA; V_I = 6 V	P_4.0.8
Line regulation	$\Delta V_{Q,Li}$	–	12	25	mV	V_I = 6 to 26 V I_Q = 5 mA	P_4.0.9
Power supply ripple rejection	*PSRR*	–	54	–	dB	f_r = 100 Hz; V_r = 0.5 Vpp	P_4.0.10
Reset generator							
Switching threshold	V_{RT}	4.5	4.65	4.8	V	–	P_4.0.11
Reset high voltage	V_{ROH}	4.5	–	–	V	–	P_4.0.12
Reset low voltage	V_{ROL}	–	60	–	mV	R_{int} = 30 kΩ[2)]; 1.0 V ≤ V_Q ≤ 4.5 V	P_4.0.13
	V_{ROL}	–	200	400	mV	I_R = 3 mA, V_Q = 4.4 V	P_4.0.14
Reset pull-up	R_{int}	18	30	46	kΩ	Internally connected to Q	P_4.0.15

Table 4 Electrical characteristics (cont'd)

V_I = 13.5 V; T_j = -40 to 125°C (unless otherwise specified)

Parameter	Symbol	Values			Unit	Note or Test Condition	Number
		Min.	Typ.	Max.			
Charge current	$I_{D,c}$	8	14	25	µA	V_D = 1.0 V	P_4.0.16
Upper reset timing threshold	V_{DU}	1.4	1.8	2.3	V	–	P_4.0.17
Lower reset timing threshold	V_{DL}	0.2	0.45	0.8	V	$V_Q < V_{RT}$	P_4.0.18
Delay time	t_{rd}	–	13	–	ms	C_D = 100 nF	P_4.0.19
Reset reaction time	t_{rr}	–	–	3	µs	C_D = 100 nF	P_4.0.20
Overvoltage protection							
Turn-off voltage	$V_{I,ov}$	42	44	46	V	–	P_4.0.21

1) Drop voltage = V_I - V_Q (measured when the output voltage has dropped 100 mV from the nominal value obtained at 13.5 V input).
2) Reset peak is always lower than 1.0 V.

4.3 Typical performance graphs

Typical performance characteristics

Output voltage V_Q vs. junction temperature T_j

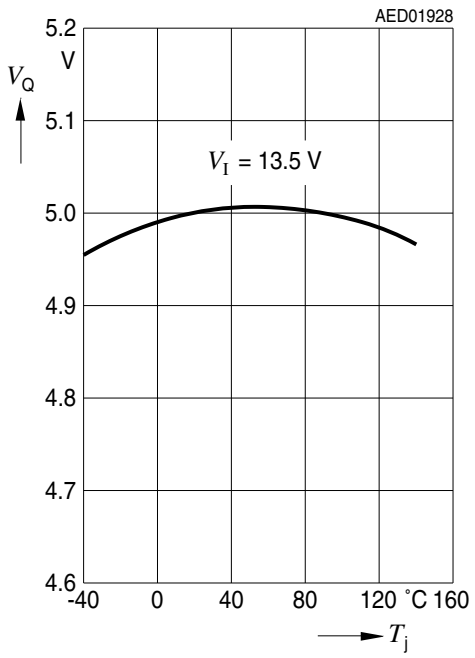

Output voltage V_Q vs. input voltage V_I

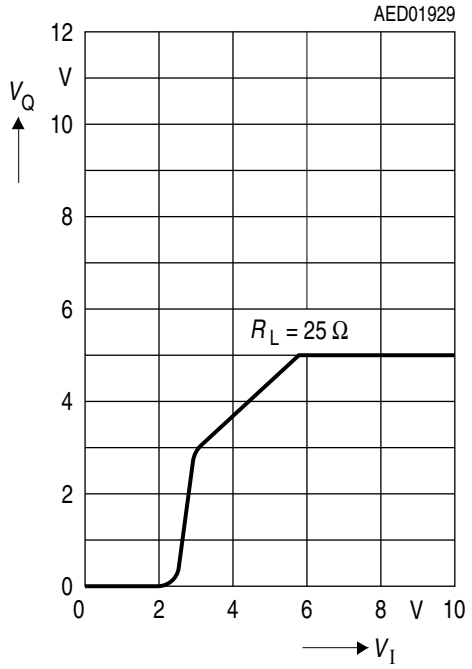

Output current I_Q vs. junction temperature T_j

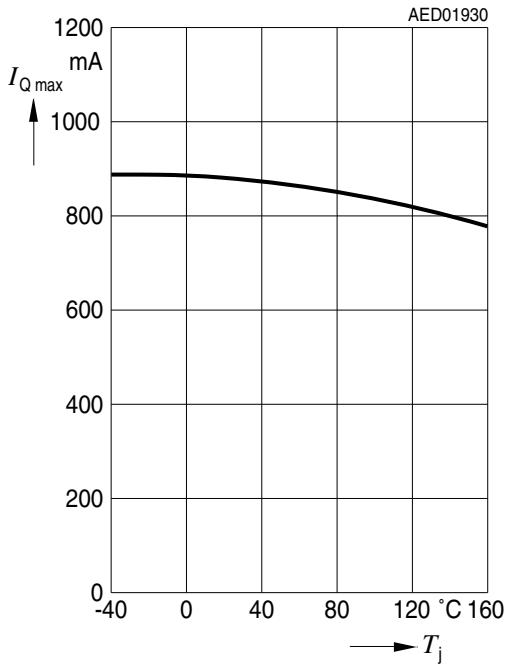

Output current I_Q vs. input voltage V_I

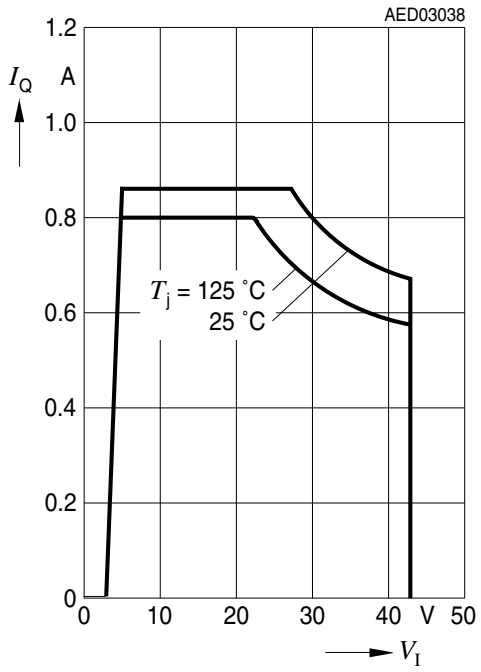

Current consumption I_q vs. output current I_Q

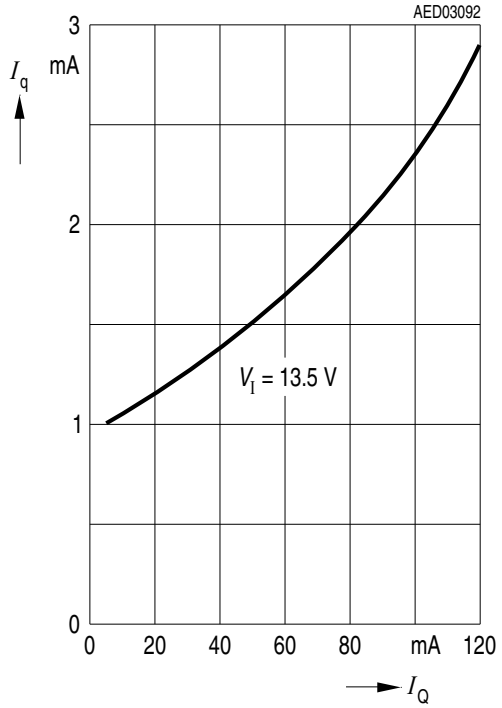

Current consumption I_q vs. output current I_Q

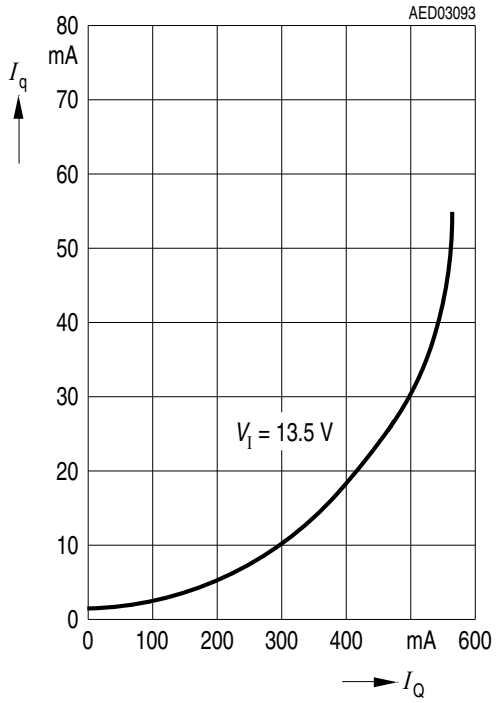

Current consumption I_q vs. input voltage V_I

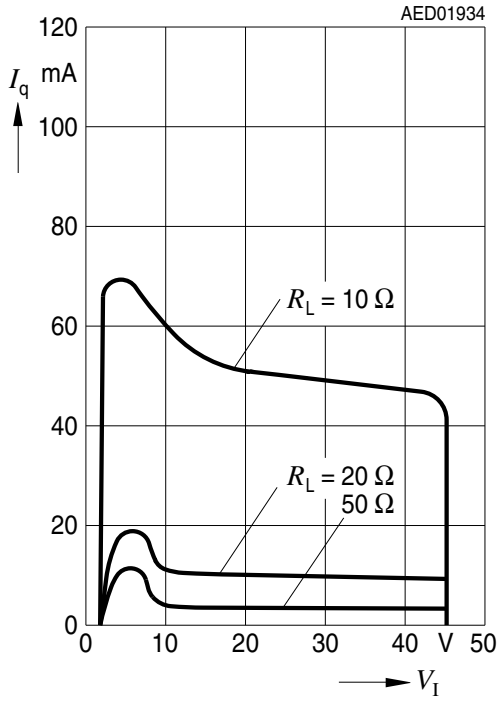

Drop voltage V_{DR} vs. output current I_Q

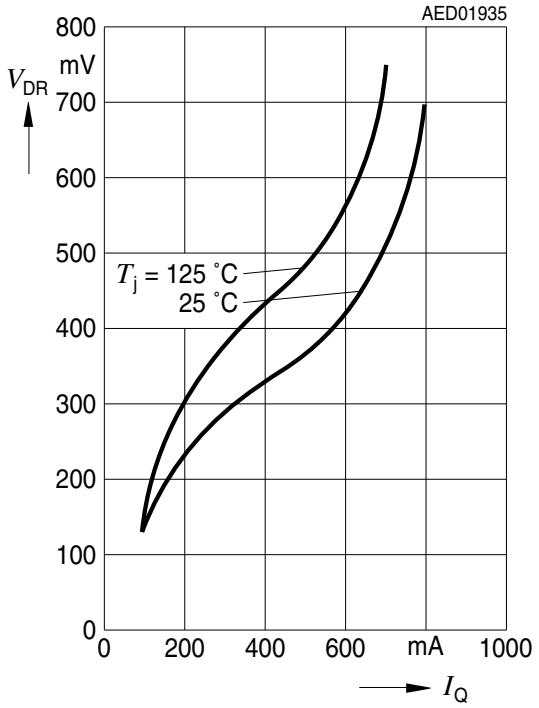

Typical performance characteristics

Charge current $I_{D,c}$ vs. junction temperature T_j

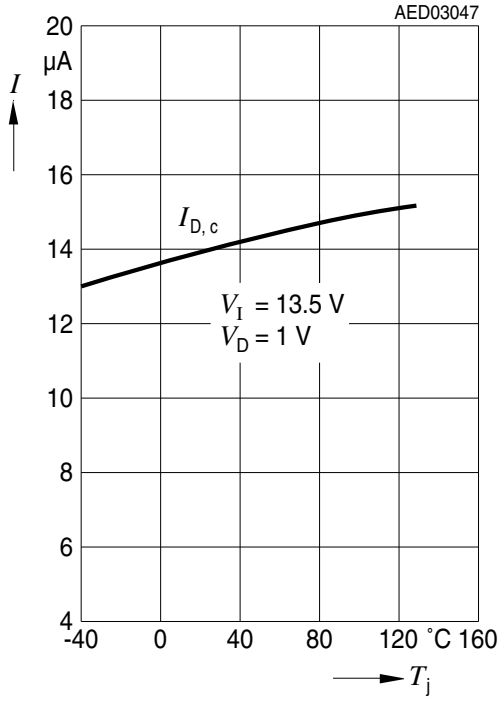

Upper reset timing threshold V_{DU} vs. junction temperature T_j

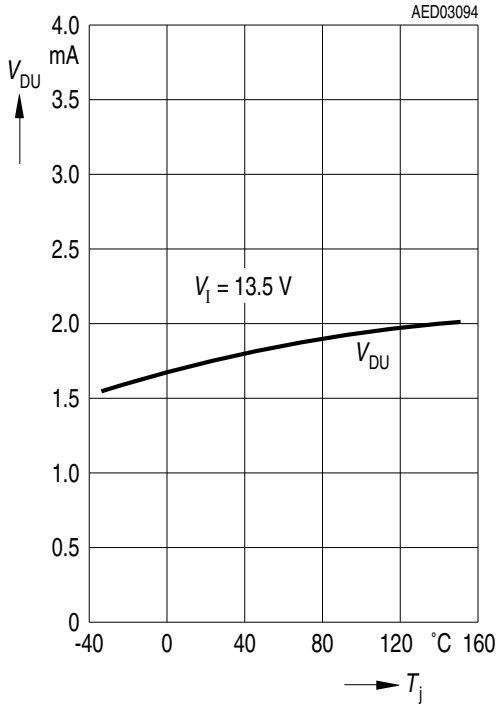

5 Application information

The IC regulates an input voltage in the range of V_I = 5.5 V to 36 V to $V_{Q,nom}$ = 5.0 V. Up to 26 V it produces a regulated output current of more than 650 mA. Above 26 V the save-operating-area protection allows operation up to 36 V with a regulated output current of more than 300 mA. Overvoltage protection limits operation at 42 V. The overvoltage protection hysteresis restores operation if the input voltage has dropped below 36 V. A reset signal is generated for an output voltage of V_Q < 4.5 V. The delay for power-on reset can be set externally with a capacitor.

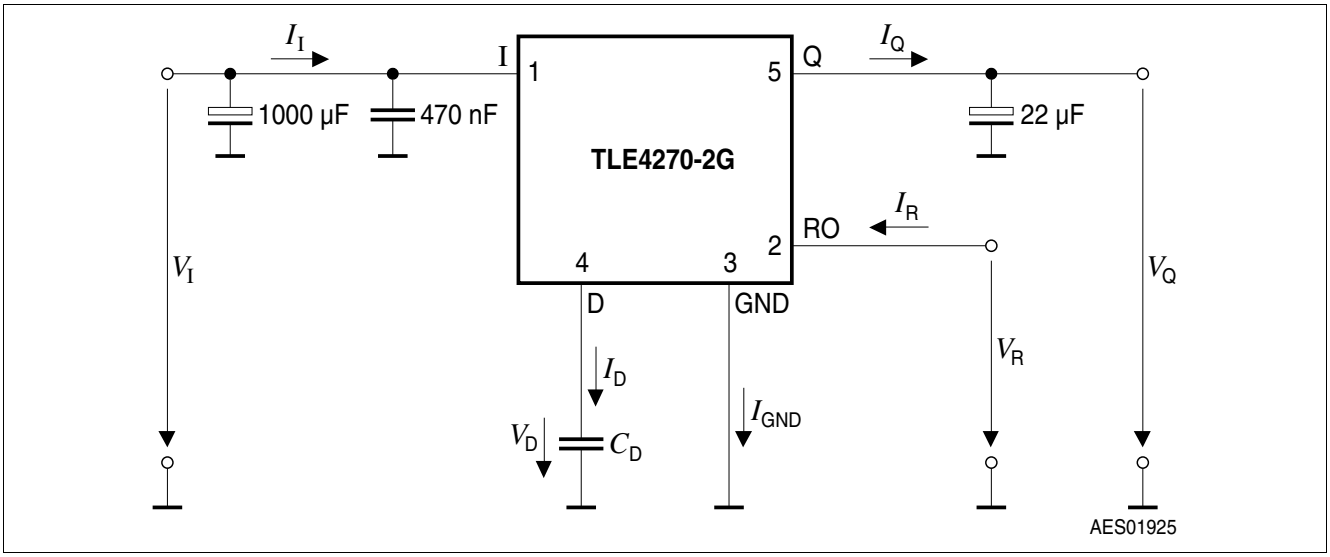

Figure 3 Test circuit

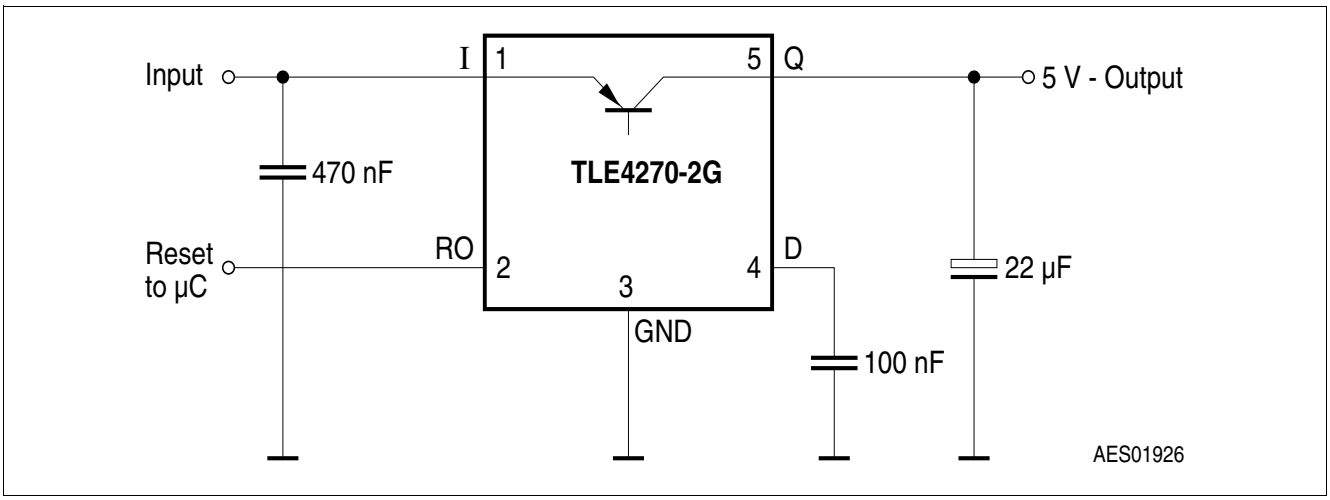

Figure 4 Application circuit

5.1 Design notes for external components

An input capacitor C_I is necessary for compensation of line influences. The resonant circuit consisting of lead inductance and input capacitance can be damped by a resistor of approx. 1 Ω in series with C_I. An output capacitor C_Q is necessary for the stability of the regulating circuit. Stability is guaranteed at values of C_Q ≥ 22 µF and an ESR of < 3 Ω.

5.2 Reset circuitry

If the output voltage decreases below 4.5 V, an external capacitor C_D on pin 4 (D) will be discharged by the reset generator. If the voltage on this capacitor drops below V_{DL}, a reset signal is generated on pin 2 (RO), i.e. reset output is set low. If the output voltage rises above the reset threshold, C_D will be charged with constant current. After the power-on-reset time the voltage on the capacitor reaches V_{DU} and the reset output will be set high again. The value of the power-on-reset time can be set within a wide range depending of the capacitance of C_D.

5.3 Reset timing

The power-on reset delay time is defined by the charging time of an external capacitor C_D which can be calculated as follows:

$$C_D = (\Delta t \times I_{D,c})/\Delta V \tag{5.1}$$

Definitions:

- C_D = delay capacitors
- Δt = reset delay time t_{rd}
- $I_{D,c}$ = charge current, typical 14 µA
- $\Delta V = V_{DU}$, typical 1.8 V

V_{DU} = upper reset timing threshold at C_D for reset delay time

$$t_{rd} = \Delta V \times C_D/I_{D,c} \tag{5.2}$$

The reset reaction time t_{rr} is the time it takes the voltage regulator to set the reset out LOW after the output voltage has dropped below the reset threshold. It is typically 1 µs for delay capacitor of 47 nF. For other values for C_D the reaction time can be estimated using the following equation:

$$t_{rr} \approx 20\ \text{s/F} \times C_D \tag{5.3}$$

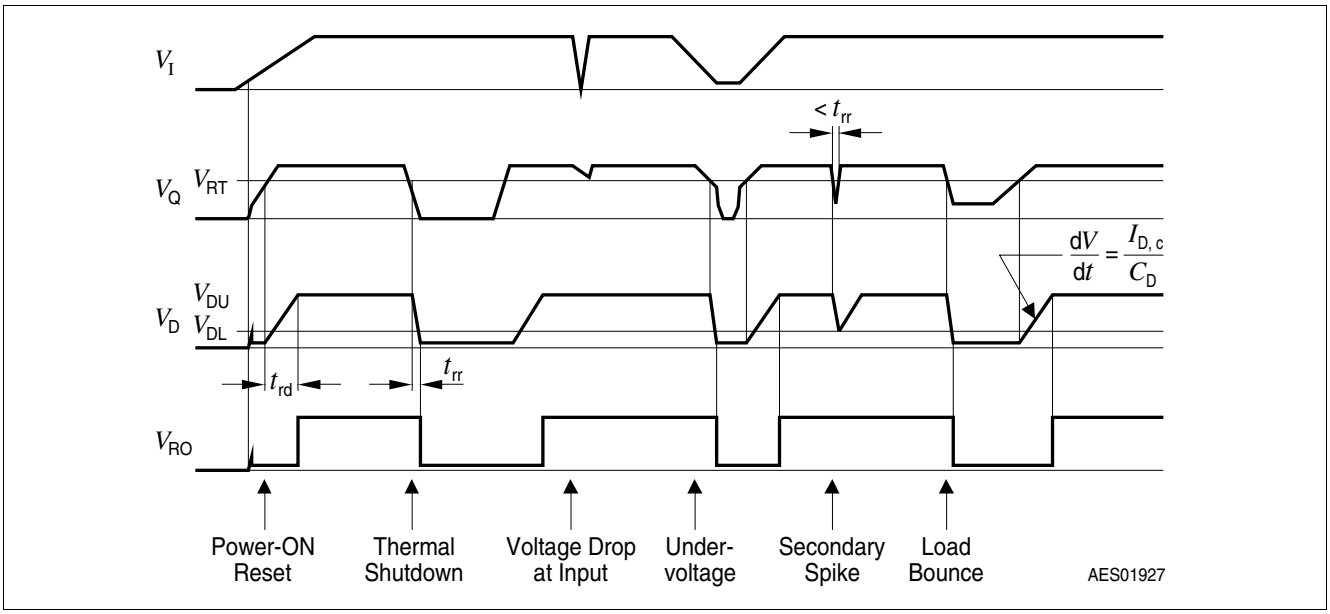

Figure 5 Reset time response

6 Package information

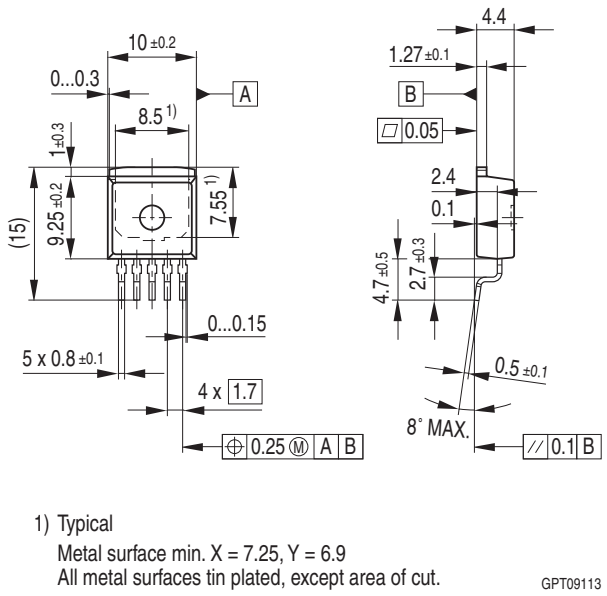

Figure 6 **P-TO263-5** (plastic transistor single outline)[1)]

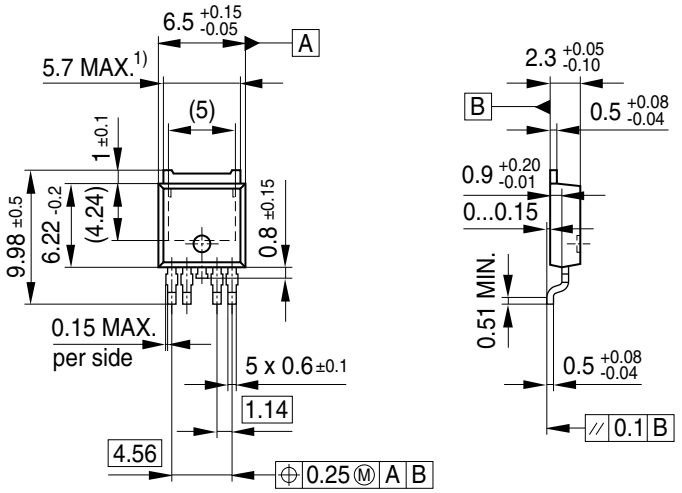

Figure 7 **P-TO252-5** (plastic transistor single outline)[1)]

Green product (RoHS compliant)

To meet the world-wide customer requirements for environmentally friendly products and to be compliant with government regulations the device is available as a green product. Green products are RoHS-Compliant (i.e Pb-free finish on leads and suitable for Pb-free soldering according to IPC/JEDEC J-STD-020).

Further information on packages

https://www.infineon.com/packages

1) Dimensions in mm.

7 Revision history

Version	Date	Changes
1.9	2020-02-25	Editorial changes, including rearranged content.
1.8	2007-11-09	**Page 1**: Changed ESD specification from “>4000V” to “±2 kV HBM” according to PCN No. 2007-08
1.7	2007-03-20	Initial version of RoHS-compliant derivate of TLE 4270. Change of product name to TLE4270-2 due to modified chip layout and size. **Page 1**: AEC certified statement added **Page 1** and **Page 15**: RoHS compliance statement and Green product feature added **Page 1** and **Page 15**: Package changed to RoHS compliant version Legal Disclaimer updated

Trademarks
All referenced product or service names and trademarks are the property of their respective owners.

Edition 2020-02-25
Published by
Infineon Technologies AG
81726 Munich, Germany

© 2004 Infineon Technologies AG.
All Rights Reserved.

Do you have a question about any aspect of this document?
Email: erratum@infineon.com

Document reference
Z8F56238277

IMPORTANT NOTICE
The information given in this document shall in no event be regarded as a guarantee of conditions or characteristics ("Beschaffenheitsgarantie").
With respect to any examples, hints or any typical values stated herein and/or any information regarding the application of the product, Infineon Technologies hereby disclaims any and all warranties and liabilities of any kind, including without limitation warranties of non-infringement of intellectual property rights of any third party.
In addition, any information given in this document is subject to customer's compliance with its obligations stated in this document and any applicable legal requirements, norms and standards concerning customer's products and any use of the product of Infineon Technologies in customer's applications.
The data contained in this document is exclusively intended for technically trained staff. It is the responsibility of customer's technical departments to evaluate the suitability of the product for the intended application and the completeness of the product information given in this document with respect to such application.

For further information on technology, delivery terms and conditions and prices, please contact the nearest Infineon Technologies Office (**www.infineon.com**).

WARNINGS
Due to technical requirements products may contain dangerous substances. For information on the types in question please contact your nearest Infineon Technologies office.

Except as otherwise explicitly approved by Infineon Technologies in a written document signed by authorized representatives of Infineon Technologies, Infineon Technologies' products may not be used in any applications where a failure of the product or any consequences of the use thereof can reasonably be expected to result in personal injury.

Looking for pricing, stock, or lifecycle information?

Click below to explore more details on WIN SOURCE:

- View TLE42702DATMA1 on WIN SOURCE
- Infineon Technologies Information

Optimize Your Supply Chain with WIN SOURCE Solutions

- Global Sourcing Solution
- Obsolete Management
- Cost Control Management
- Shortage Management
- Alternative Solution
- Excess Inventory Management