THE DATASHEET OF

AAA3528ESGCT

www.win-source.net 0086-755-83957316

Kingbright

AAA3528ESGCT

3.5 x 2.8 mm Surface Mount LED Lamp

DESCRIPTIONS

- The High Efficiency Red source color devices are made with Gallium Arsenide Phosphide on Gallium Phosphide Orange Light Emitting Diode
- The Super Bright Green source color devices are made with Gallium Phosphide Green Light Emitting Diode

FEATURES

- Suitable for all SMD assembly and solder process
- Available on tape and reel
- Package: 2000 pcs / reel
- Moisture sensitivity level: 3
- Halogen-free
- RoHS compliant

APPLICATIONS

- Backlight
- Status indicator
- Home and smart appliances
- Wearable and portable devices
- Healthcare applications

PACKAGE DIMENSIONS

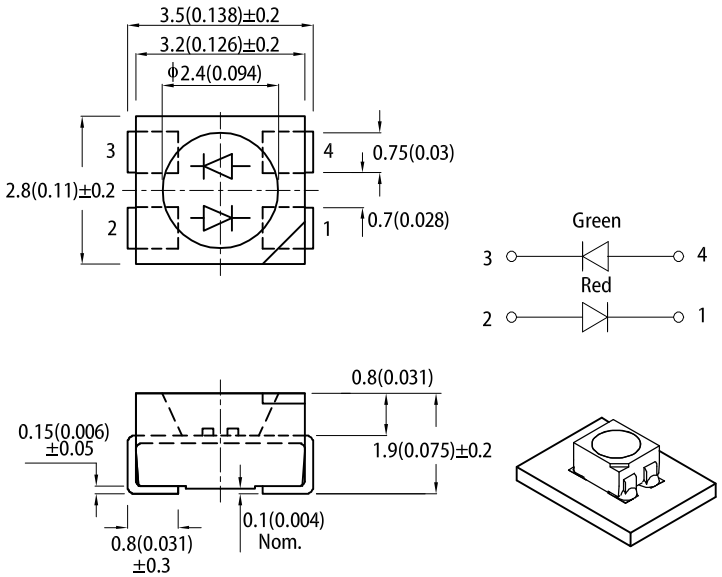

RECOMMENDED SOLDERING PATTERN

(units : mm; tolerance : ± 0.1)

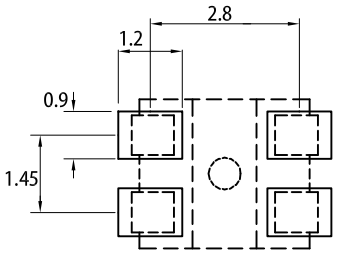

Notes:
1. All dimensions are in millimeters (inches).
2. Tolerance is ±0.25(0.01") unless otherwise noted.
3. The specifications, characteristics and technical data described in the datasheet are subject to change without prior notice.
4. The device has a single mounting surface. The device must be mounted according to the specifications.

SELECTION GUIDE

Part Number	Emitting Color (Material)	Lens Type	Iv (mcd) @ 20mA [2]		Viewing Angle [1]
			Min.	Typ.	2θ1/2
AAA3528ESGCT	High Efficiency Red (GaAsP/GaP)	Water Clear	12	30	120°
			*8	*15	
	Super Bright Green (GaP)		12	30	
			*12	*30	

Notes:
1. θ1/2 is the angle from optical centerline where the luminous intensity is 1/2 of the optical peak value.
2. Luminous intensity / luminous flux: +/-15%.
** Luminous intensity value is traceable to CIE127-2007 standards.*

RoHS © 2020 Kingbright. All Rights Reserved.

ELECTRICAL / OPTICAL CHARACTERISTICS at T_A=25°C

Parameter	Symbol	Emitting Color	Value		Unit
			Typ.	Max.	
Wavelength at Peak Emission I_F = 20mA	λ_{peak}	High Efficiency Red Super Bright Green	627 565	-	nm
Dominant Wavelength I_F = 20mA	λ_{dom} [1]	High Efficiency Red Super Bright Green	617 568	-	nm
Spectral Bandwidth at 50% Φ REL MAX I_F = 20mA	Δλ	High Efficiency Red Super Bright Green	45 30	-	nm
Capacitance	C	High Efficiency Red Super Bright Green	15 15	-	pF
Forward Voltage I_F = 20mA	V_F [2]	High Efficiency Red Super Bright Green	2.0 2.2	2.5 2.5	V
Reverse Current (V_R = 5V)	I_R	High Efficiency Red Super Bright Green	-	10 10	μA
Temperature Coefficient of λ_{peak} I_F = 20mA, -10°C ≤ T ≤ 85°C	$TC_{\lambda peak}$	High Efficiency Red Super Bright Green	0.13 0.12	-	nm/°C
Temperature Coefficient of λ_{dom} I_F = 20mA, -10°C ≤ T ≤ 85°C	$TC_{\lambda dom}$	High Efficiency Red Super Bright Green	0.06 0.08	-	nm/°C
Temperature Coefficient of V_F I_F = 20mA, -10°C ≤ T ≤ 85°C	TC_V	High Efficiency Red Super Bright Green	-1.9 -2.0	-	mV/°C

Notes:
1. The dominant wavelength (λd) above is the setup value of the sorting machine. (Tolerance λd : ±1nm.)
2. Forward voltage: ±0.1V.
3. Wavelength value is traceable to CIE127-2007 standards.
4. Excess driving current and / or operating temperature higher than recommended conditions may result in severe light degradation or premature failure.

ABSOLUTE MAXIMUM RATINGS at T_A=25°C

Parameter	Symbol	Value		Unit
		High Efficiency Red	Super Bright Green	
Power Dissipation	P_D	75	62.5	mW
Reverse Voltage	V_R	5	5	V
Junction Temperature	T_J	125	110	°C
Operating Temperature	T_{op}	-40 To +85		°C
Storage Temperature	T_{stg}	-40 To +85		°C
DC Forward Current	I_F	30	25	mA
Peak Forward Current	I_{FM} [1]	160	140	mA
Electrostatic Discharge Threshold (HBM)	-	8000	8000	V
Thermal Resistance (Junction / Ambient)	$R_{th\ JA}$ [2]	430	460	°C/W
Thermal Resistance (Junction / Solder point)	$R_{th\ JS}$ [2]	260	300	°C/W

Notes:
1. 1/10 Duty Cycle, 0.1ms Pulse Width.
2. $R_{th\ JA}$,$R_{th\ JS}$ Results from mounting on PC board FR4 (pad size ≥ 16 mm^2 per pad).
3. Relative humidity levels maintained between 40% and 60% in production area are recommended to avoid the build-up of static electricity – Ref JEDEC/JESD625-A and JEDEC/J-STD-033.

RoHS © 2020 Kingbright. All Rights Reserved.

TECHNICAL DATA

RELATIVE INTENSITY vs. WAVELENGTH

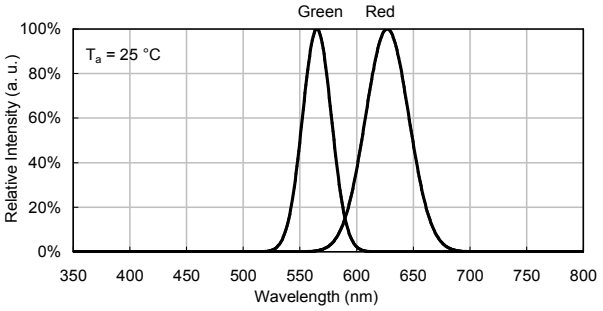

SPATIAL DISTRIBUTION

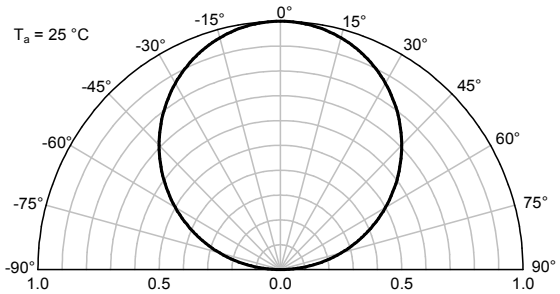

HIGH EFFICIENCY RED

Forward Current vs. Forward Voltage

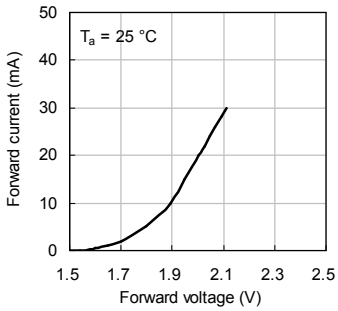

Luminous Intensity vs. Forward Current

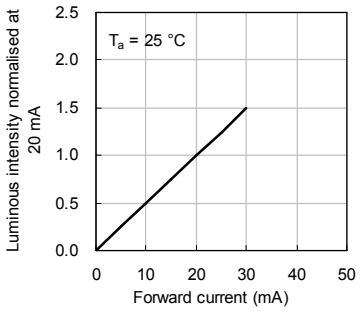

Forward Current Derating Curve

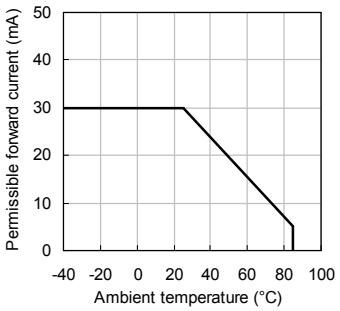

Luminous Intensity vs. Ambient Temperature

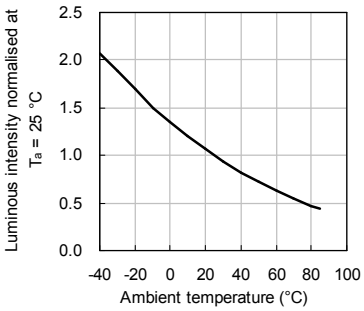

SUPER BRIGHT GREEN

Forward Current vs. Forward Voltage

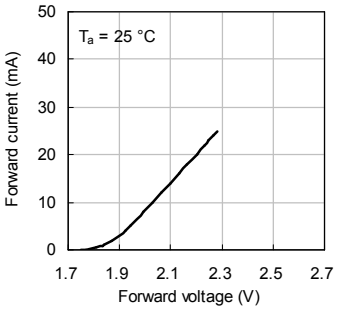

Luminous Intensity vs. Forward Current

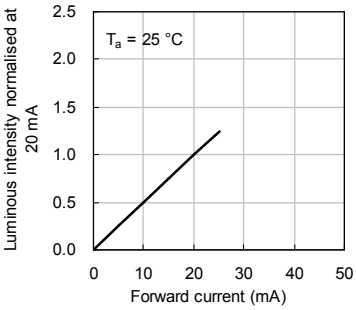

Forward Current Derating Curve

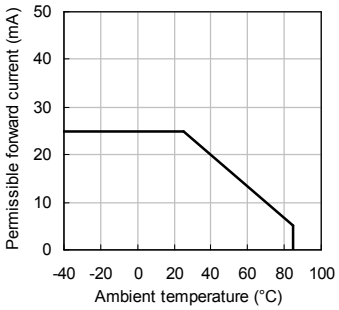

Luminous Intensity vs. Ambient Temperature

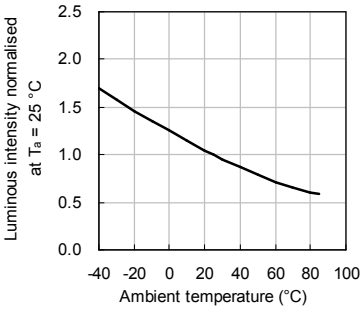

RoHS © 2020 Kingbright. All Rights Reserved.

REFLOW SOLDERING PROFILE for LEAD-FREE SMD PROCESS

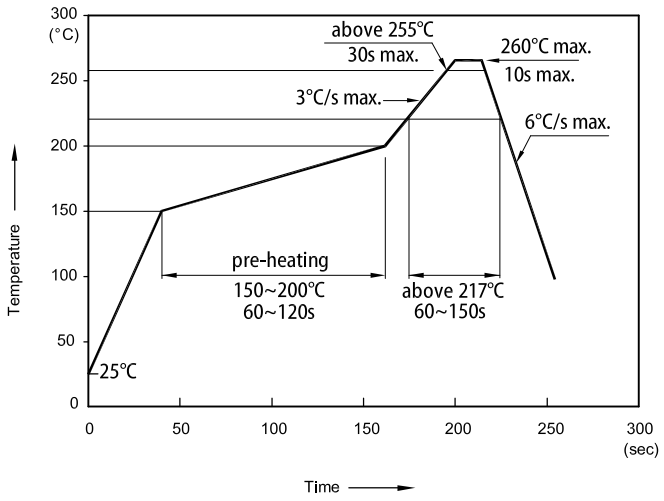

Notes:
1. Don't cause stress to the LEDs while it is exposed to high temperature.
2. The maximum number of reflow soldering passes is 2 times.
3. Reflow soldering is recommended. Other soldering methods are not recommended as they might cause damage to the product.

TAPE SPECIFICATIONS (units : mm)

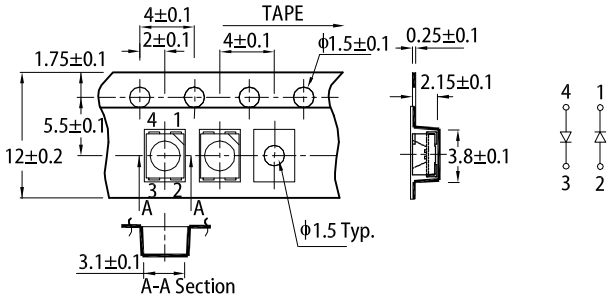

REEL DIMENSION (units : mm)

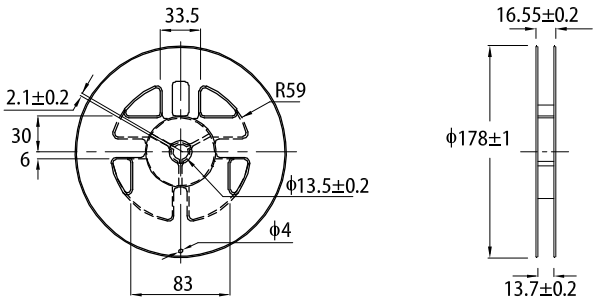

PACKING & LABEL SPECIFICATIONS

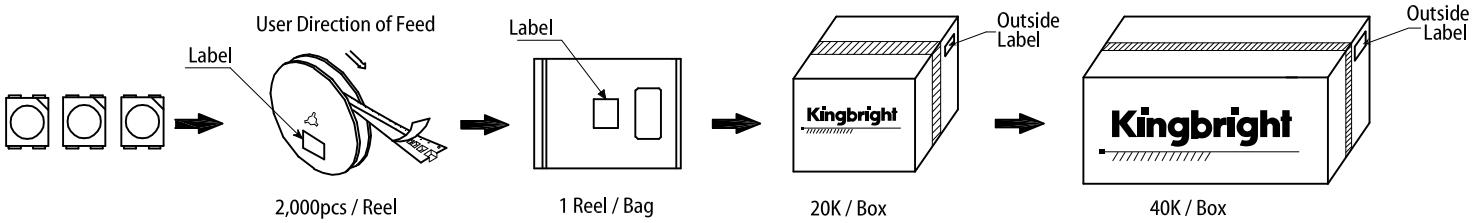

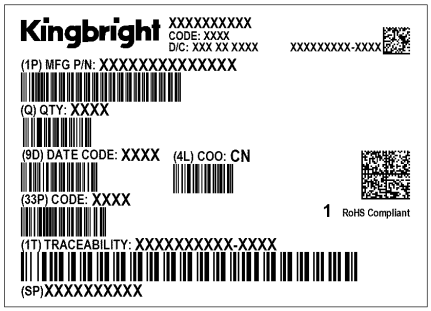

PRECAUTIONARY NOTES

1. The information included in this document reflects representative usage scenarios and is intended for technical reference only.
2. The part number, type, and specifications mentioned in this document are subject to future change and improvement without notice. Before production usage customer should refer to the latest datasheet for the updated specifications.
3. When using the products referenced in this document, please make sure the product is being operated within the environmental and electrical limits specified in the datasheet. If customer usage exceeds the specified limits, Kingbright will not be responsible for any subsequent issues.
4. The information in this document applies to typical usage in consumer electronics applications. If customer's application has special reliability requirements or have life-threatening liabilities, such as automotive or medical usage, please consult with Kingbright representative for further assistance.
5. The contents and information of this document may not be reproduced or re-transmitted without permission by Kingbright.
6. All design applications should refer to Kingbright application notes available at https://www.KingbrightUSA.com/ApplicationNotes

© 2020 Kingbright. All Rights Reserved.

Looking for pricing, stock, or lifecycle information?

Click below to explore more details on WIN SOURCE:

- View AAA3528ESGCT on WIN SOURCE
- Kingbright Corporation Information

Optimize Your Supply Chain with WIN SOURCE Solutions

- Global Sourcing Solution
- Obsolete Management
- Cost Control Management
- Shortage Management
- Alternative Solution
- Excess Inventory Management