THE DATASHEET OF

AOSP36326C

www.win-source.net 0086-755-83957316

ALPHA & OMEGA SEMICONDUCTOR

AOSP36326C

30V N-Channel MOSFET

General Description

- Trench Power MOSFET technology
- Very Low $R_{DS(ON)}$ at 4.5V V_{GS}
- Low Gate Charge
- High Current Capability
- RoHS and Halogen-Free Compliant

Applications

- DC/DC Converters in Computing, Servers, and POL
- Isolated DC/DC Converters in Telecom and Industrial
- See Note G

Product Summary

V_{DS}	30V
I_D (at V_{GS}=10V)	12A
$R_{DS(ON)}$ (at V_{GS}=10V)	< 11mΩ
$R_{DS(ON)}$ (at V_{GS}=4.5V)	< 17mΩ

100% UIS Tested
100% Rg Tested

Green Product

SOIC-8

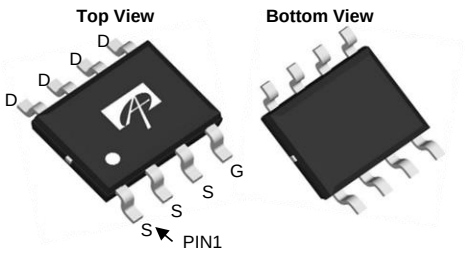

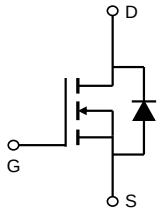

Orderable Part Number	Package Type	Form	Minimum Order Quantity
AOSP36326C	SO-8	Tape & Reel	3000

Absolute Maximum Ratings T_A=25°C unless otherwise noted

Parameter		Symbol	Maximum	Units
Drain-Source Voltage		V_{DS}	30	V
Gate-Source Voltage		V_{GS}	±20	V
Continuous Drain Current	T_A=25°C	I_D	12	A
	T_A=70°C		9.4	
Pulsed Drain Current [C]		I_{DM}	48	
Avalanche Current [C]		I_{AS}	15	A
Avalanche energy	L=0.1mH [C]	E_{AS}	11	mJ
Power Dissipation [B]	T_A=25°C	P_D	2.5	W
	T_A=70°C		1.6	
Junction and Storage Temperature Range		T_J, T_{STG}	-55 to 150	°C

Thermal Characteristics

Parameter		Symbol	Typ	Max	Units
Maximum Junction-to-Ambient [A]	t ≤ 10s	$R_{\theta JA}$	42	50	°C/W
Maximum Junction-to-Ambient [A D]	Steady-State		70	85	°C/W
Maximum Junction-to-Lead	Steady-State	$R_{\theta JL}$	20	30	°C/W

Electrical Characteristics (T_J=25°C unless otherwise noted)

Symbol	Parameter	Conditions	Min	Typ	Max	Units
STATIC PARAMETERS						
BV_{DSS}	Drain-Source Breakdown Voltage	ID=250µA, VGS=0V	30			V
I_{DSS}	Zero Gate Voltage Drain Current	V_{DS}=30V, V_{GS}=0V			1	µA
		T_J=55°C			5	
I_{GSS}	Gate-Body leakage current	V_{DS}=0V, V_{GS}=±20V			±100	nA
$V_{GS(th)}$	Gate Threshold Voltage	V_{DS}=V_{GS}, I_D=250µA	1.3	1.8	2.3	V
$R_{DS(ON)}$	Static Drain-Source On-Resistance	V_{GS}=10V, I_D=12A		9	11	mΩ
		T_J=125°C		12.5	15	
		V_{GS}=4.5V, I_D=10A		13.5	17	mΩ
g_{FS}	Forward Transconductance	V_{DS}=5V, I_D=12A		45		S
V_{SD}	Diode Forward Voltage	I_S=1A, V_{GS}=0V		0.72	1	V
I_S	Maximum Body-Diode Continuous Current				3.5	A
DYNAMIC PARAMETERS						
C_{iss}	Input Capacitance	V_{GS}=0V, V_{DS}=15V, f=1MHz		542		pF
C_{oss}	Output Capacitance			233		pF
C_{rss}	Reverse Transfer Capacitance			31		pF
R_g	Gate resistance	f=1MHz	1	2	3	Ω
SWITCHING PARAMETERS						
Q_g(10V)	Total Gate Charge	V_{GS}=10V, V_{DS}=15V, I_D=12A		9	15	nC
Q_g(4.5V)	Total Gate Charge			4.3	7	nC
Q_{gs}	Gate Source Charge			2.2		nC
Q_{gd}	Gate Drain Charge			1.7		nC
$t_{D(on)}$	Turn-On DelayTime	V_{GS}=10V, V_{DS}=15V, R_L=1.25Ω, R_{GEN}=3Ω		4		ns
t_r	Turn-On Rise Time			3.5		ns
$t_{D(off)}$	Turn-Off DelayTime			18		ns
t_f	Turn-Off Fall Time			3		ns
t_{rr}	Body Diode Reverse Recovery Time	I_F=12A, di/dt=500A/µs		9.7		ns
Q_{rr}	Body Diode Reverse Recovery Charge	I_F=12A, di/dt=500A/µs		11.5		nC

A. The value of $R_{\theta JA}$ is measured with the device mounted on 1in^2 FR-4 board with 2oz. Copper, in a still air environment with T_A =25° C. The value in any given application depends on the user's specific board design.
B. The power dissipation P_D is based on $T_{J(MAX)}$=150° C, using ≤ 10s junction-to-ambient thermal resistance.
C. Repetitive rating, pulse width limited by junction temperature $T_{J(MAX)}$=150° C. Ratings are based on low frequency and duty cycles to keep initialT_J=25° C.
D. The $R_{\theta JA}$ is the sum of the thermal impedance from junction to lead $R_{\theta JL}$ and lead to ambient.
E. The static characteristics in Figures 1 to 6 are obtained using <300µs pulses, duty cycle 0.5% max.
F. These curves are based on the junction-to-ambient thermal impedance which is measured with the device mounted on 1in^2 FR-4 board with 2oz. Copper, assuming a maximum junction temperature of $T_{J(MAX)}$=150° C. The SOA curve provides a single pulse rating.
G. For application requiring slow >1ms turn-on/turn-off, please consult AOS FAE for proper product selection.

APPLICATIONS OR USES AS CRITICAL COMPONENTS IN LIFE SUPPORT DEVICES OR SYSTEMS ARE NOT AUTHORIZED. AOS DOES NOT ASSUME ANY LIABILITY ARISING OUT OF SUCH APPLICATIONS OR USES OF ITS PRODUCTS. AOS RESERVES THE RIGHT TO MAKE CHANGES TO PRODUCT SPECIFICATIONS WITHOUT NOTICE. IT IS THE RESPONSIBILITY OF THE CUSTOMER TO EVALUATE SUITABILITY OF THE PRODUCT FOR THEIR INTENDED APPLICATION. CUSTOMER SHALL COMPLY WITH APPLICABLE LEGAL REQUIREMENTS, INCLUDING ALL APPLICABLE EXPORT CONTROL RULES, REGULATIONS AND LIMITATIONS.

AOS' products are provided subject to AOS' terms and conditions of sale which are set forth at:
http://www.aosmd.com/terms_and_conditions_of_sale

TYPICAL ELECTRICAL AND THERMAL CHARACTERISTICS

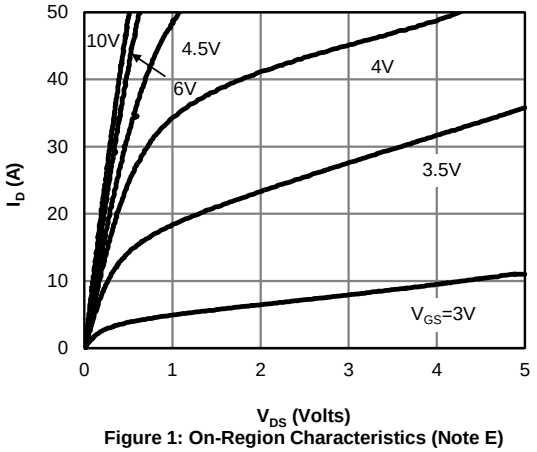

Figure 1: On-Region Characteristics (Note E)

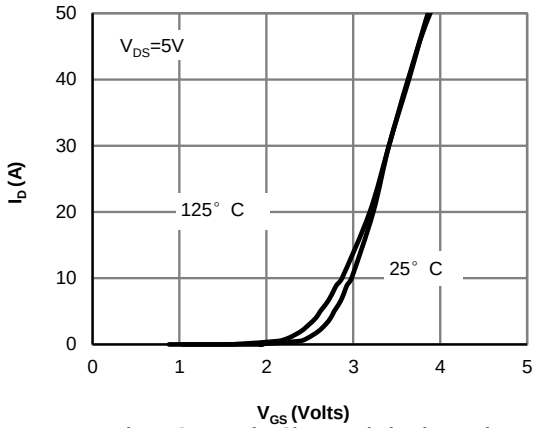

Figure 2: Transfer Characteristics (Note E)

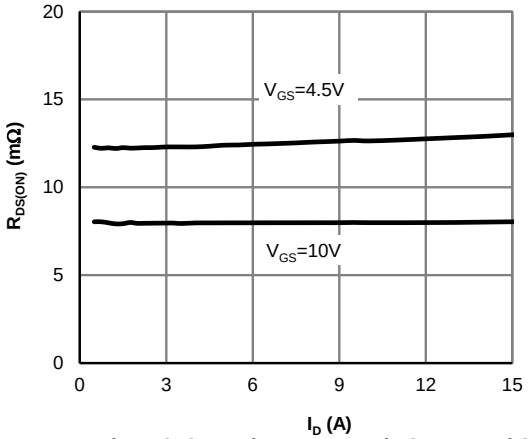

Figure 3: On-Resistance vs. Drain Current and Gate Voltage (Note E)

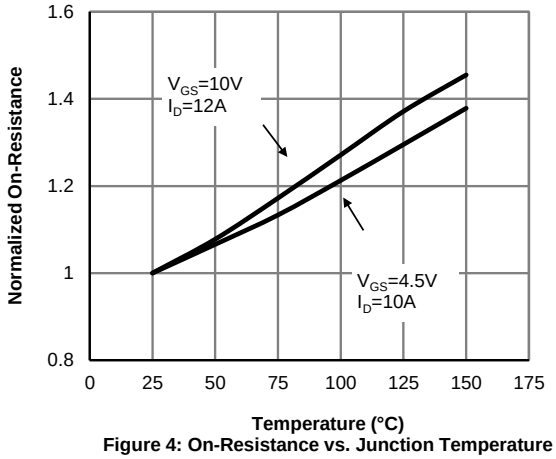

Figure 4: On-Resistance vs. Junction Temperature (Note E)

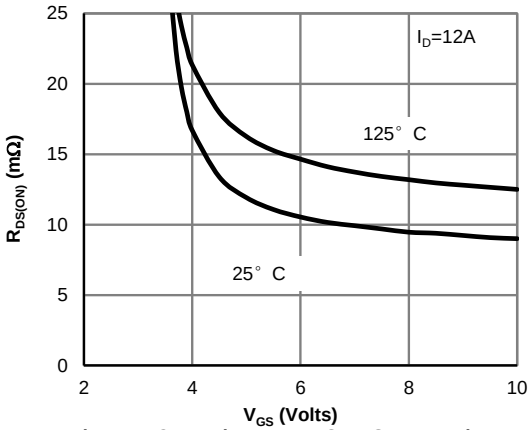

Figure 5: On-Resistance vs. Gate-Source Voltage (Note E)

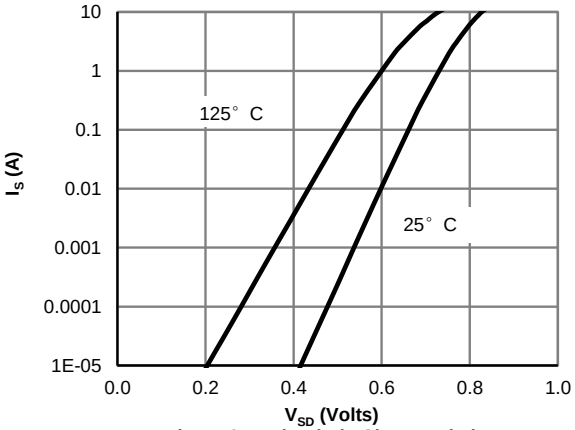

Figure 6: Body-Diode Characteristics (Note E)

TYPICAL ELECTRICAL AND THERMAL CHARACTERISTICS

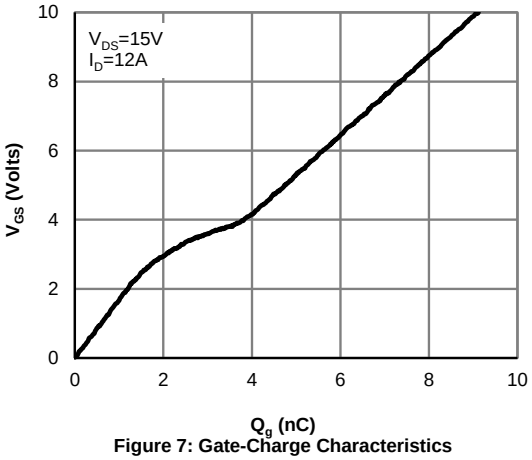

Figure 7: Gate-Charge Characteristics

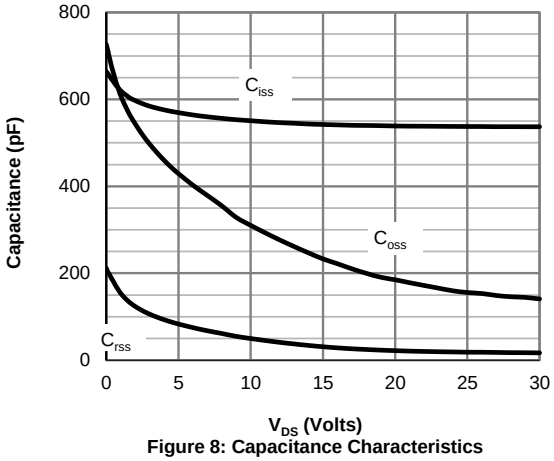

Figure 8: Capacitance Characteristics

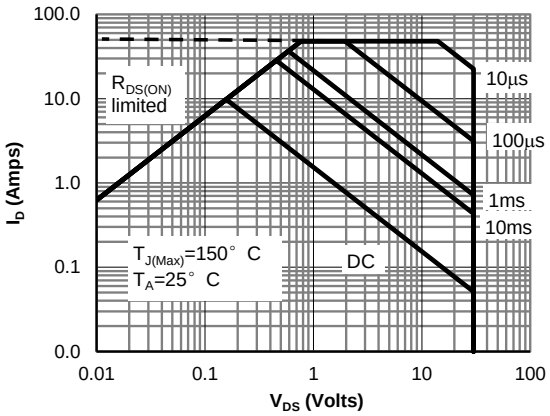

V_{GS}> or equal to 4.5V
Figure 9: Maximum Forward Biased Safe Operating Area (Note F)

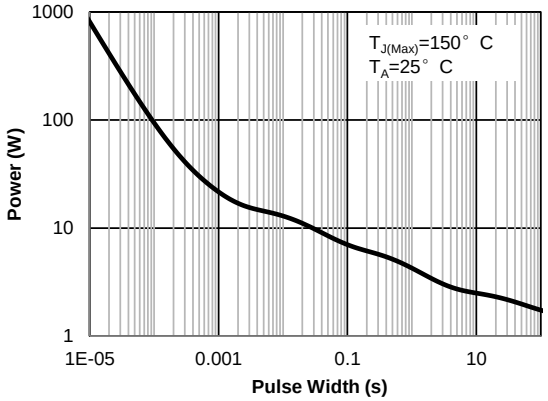

Figure 10: Single Pulse Power Rating Junction-to-Ambient (Note F)

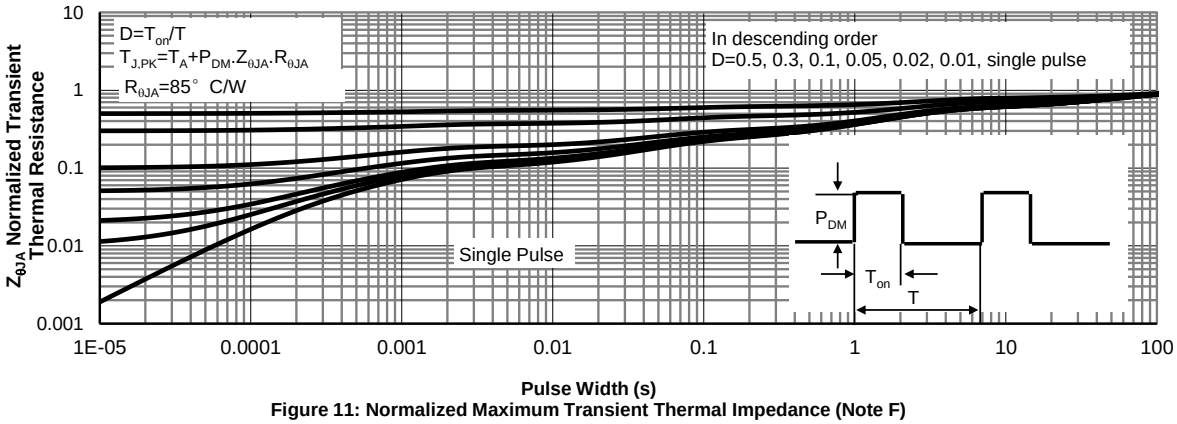

Figure 11: Normalized Maximum Transient Thermal Impedance (Note F)

Figure A: Gate Charge Test Circuit & Waveforms

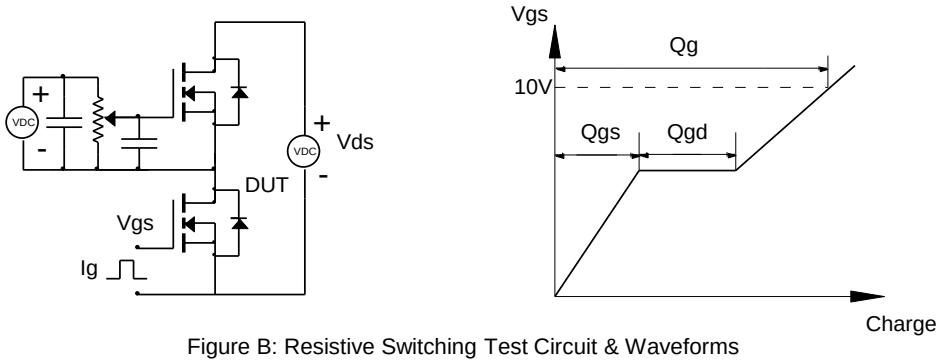

Figure B: Resistive Switching Test Circuit & Waveforms

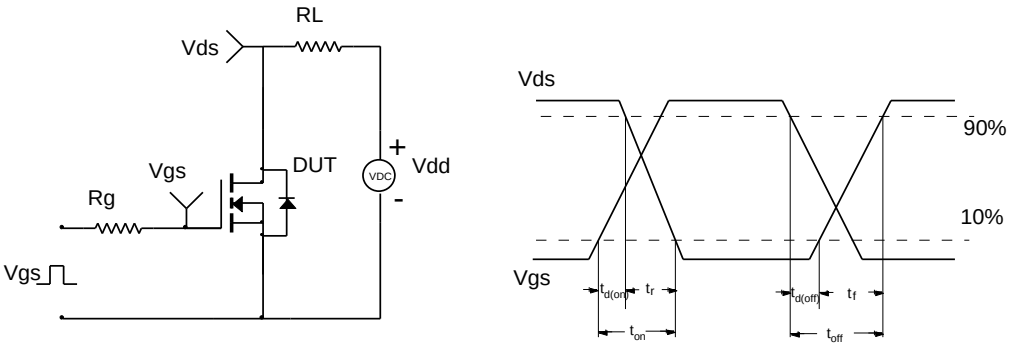

Figure C: Unclamped Inductive Switching (UIS) Test Circuit & Waveforms

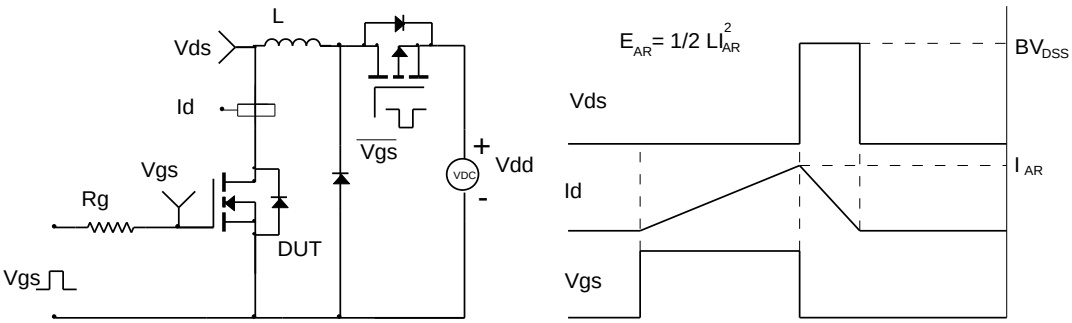

Figure D: Diode Recovery Test Circuit & Waveforms

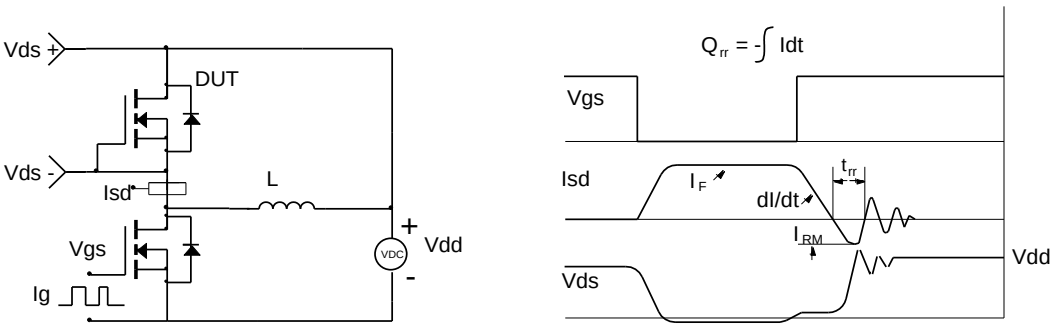

Looking for pricing, stock, or lifecycle information?

Click below to explore more details on WIN SOURCE:

- View AOSP36326C on WIN SOURCE
- Alpha & Omega Semiconductor Inc. Information

Optimize Your Supply Chain with WIN SOURCE Solutions

- Global Sourcing Solution
- Obsolete Management
- Cost Control Management
- Shortage Management
- Alternative Solution
- Excess Inventory Management