THE DATASHEET OF

EFM32TG11B340F64GQ48-A

www.win-source.net 0086-755-83957316

EFM32 Tiny Gecko Series 1 Family
EFM32TG11 Family Data Sheet

The EFM32 Tiny Gecko Series 1 MCUs are the world's most energy-friendly microcontrollers, featuring new connectivity interfaces and rich analog features.

EFM32TG11 includes a powerful and efficient 32-bit ARM® Cortex®-M0+ and provides robust security via a unique cryptographic hardware engine supporting AES, ECC, SHA, and True Random Number Generator (TRNG). New features include a CAN bus controller, highly robust capacitive sensing, and LESENSE/PCNT enhancements for smart energy meters. These features, combined with ultra-low current active mode and short wake-up time from energy-saving modes, make EFM32TG11 microcontrollers well suited for any battery-powered application, as well as other systems requiring high performance and low-energy consumption.

Example applications:

- Smart energy meters
- Industrial and factory automation
- Home automation and security
- Entry-level wearables
- Personal medical devices
- IoT devices

ENERGY FRIENDLY FEATURES

- ARM Cortex-M0+ at 48 MHz
- Ultra low energy operation:
  - 37 µA/MHz in Energy Mode 0 (EM0)
  - 1.30 µA EM2 Deep Sleep current
- CAN 2.0 Bus Controller
- Low energy analog peripherals: ADC, DAC, OPAMP, Comparator, Segment LCD
- Hardware cryptographic engine supports AES, ECC, SHA, and TRNG
- Robust capacitive touch sense
- Footprint compatible with select EFM32 packages
- 5 V tolerant I/O

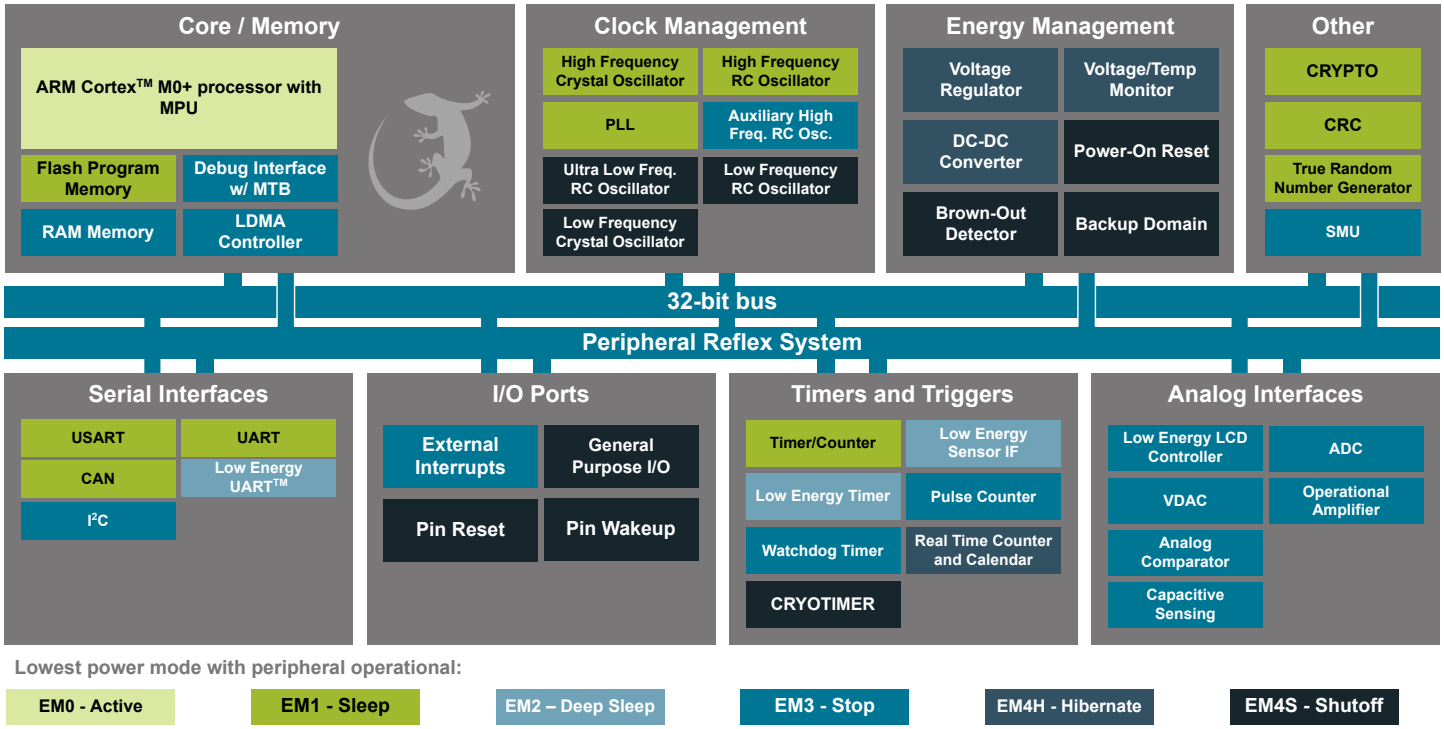

1. Feature List

The EFM32TG11 highlighted features are listed below.

- **ARM Cortex-M0+ CPU platform**
  - High performance 32-bit processor @ up to 48 MHz
  - Memory Protection Unit
  - Wake-up Interrupt Controller
- **Flexible Energy Management System**
  - 37 µA/MHz in Active Mode (EM0)
  - 1.30 µA EM2 Deep Sleep current (8 kB RAM retention and RTCC running from LFRCO)
- **Integrated DC-DC buck converter**
- **Backup Power Domain**
  - RTCC and retention registers in a separate power domain, available in all energy modes
  - Operation from backup battery when main power absent/ insufficient
- **Up to 128 kB flash program memory**
- **Up to 32 kB RAM data memory**
- **Communication Interfaces**
  - CAN Bus Controller
    - Version 2.0A and 2.0B up to 1 Mbps
  - 4 × Universal Synchronous/Asynchronous Receiver/ Transmitter
    - UART/SPI/SmartCard (ISO 7816)/IrDA/I2S/LIN
    - Triple buffered full/half-duplex operation with flow control
    - Ultra high speed (24 MHz) operation on one instance
  - 1 × Universal Asynchronous Receiver/ Transmitter
  - 1 × Low Energy UART
    - Autonomous operation with DMA in Deep Sleep Mode
  - 2 × I^2C Interface with SMBus support
    - Address recognition in EM3 Stop Mode
- **Up to 67 General Purpose I/O Pins**
  - Configurable push-pull, open-drain, pull-up/down, input filter, drive strength
  - Configurable peripheral I/O locations
  - 5 V tolerance on select pins
  - Asynchronous external interrupts
  - Output state retention and wake-up from Shutoff Mode
- **Up to 8 Channel DMA Controller**
- **Up to 8 Channel Peripheral Reflex System (PRS) for autonomous inter-peripheral signaling**
- **Hardware Cryptography**
  - AES 128/256-bit keys
  - ECC B/K163, B/K233, P192, P224, P256
  - SHA-1 and SHA-2 (SHA-224 and SHA-256)
  - True Random Number Generator (TRNG)
- **Hardware CRC engine**
  - Single-cycle computation with 8/16/32-bit data and 16-bit (programmable)/32-bit (fixed) polynomial
- **Security Management Unit (SMU)**
  - Fine-grained access control for on-chip peripherals
- **Integrated Low-energy LCD Controller with up to 8 × 32 segments**
  - Voltage boost, contrast and autonomous animation
  - Patented low-energy LCD driver
- **Ultra Low-Power Precision Analog Peripherals**
  - 12-bit 1 Msamples/s Analog to Digital Converter (ADC)
    - On-chip temperature sensor
  - 2 × 12-bit 500 ksamples/s Digital to Analog Converter (VDAC)
  - Up to 2 × Analog Comparator (ACMP)
  - Up to 4 × Operational Amplifier (OPAMP)
  - Robust current-based capacitive sensing with up to 38 inputs and wake-on-touch (CSEN)
  - Up to 62 GPIO pins are analog-capable. Flexible analog peripheral-to-pin routing via Analog Port (APORT)
  - Supply Voltage Monitor

- **Timers/Counters**
  - 2 × 16-bit Timer/Counter
    - 3 or 4 Compare/Capture/PWM channels (4 + 4 on one timer instance)
    - Dead-Time Insertion on one timer instance
  - 2 × 32-bit Timer/Counter
  - 32-bit Real Time Counter and Calendar (RTCC)
  - 32-bit Ultra Low Energy CRYOTIMER for periodic wakeup from any Energy Mode
  - 16-bit Low Energy Timer for waveform generation
  - 16-bit Pulse Counter with asynchronous operation
  - Watchdog Timer with dedicated RC oscillator
- **Low Energy Sensor Interface (LESENSE)**
  - Autonomous sensor monitoring in Deep Sleep Mode
  - Wide range of sensors supported, including LC sensors and capacitive buttons
  - Up to 16 inputs
- **Ultra efficient Power-on Reset and Brown-Out Detector**
- **Debug Interface**
  - 2-pin Serial Wire Debug interface
  - 4-pin JTAG interface
  - Micro Trace Buffer (MTB)
- **Pre-Programmed UART Bootloader**
- **Wide Operating Range**
  - 1.8 V to 3.8 V single power supply
  - Integrated DC-DC, down to 1.8 V output with up to 200 mA load current for system
  - Standard (-40 °C to 85 °C T_A) and Extended (-40 °C to 125 °C T_J) temperature grades available
- **Packages**
  - QFN32 (5x5 mm)
  - TQFP48 (7x7 mm)
  - QFN64 (9x9 mm)
  - TQFP64 (10x10 mm)
  - QFN80 (9x9 mm)
  - TQFP80 (12x12 mm)

2. Ordering Information

Table 2.1. Ordering Information

Ordering Code	Flash (kB)	RAM (kB)	DC-DC Con-verter	LCD	GPIO	Package	Temp Range
EFM32TG11B520F128GM80-B	128	32	Yes	Yes	67	QFN80	-40 to +85°C
EFM32TG11B520F128GQ80-B	128	32	Yes	Yes	63	QFP80	-40 to +85°C
EFM32TG11B520F128IM80-B	128	32	Yes	Yes	67	QFN80	-40 to +125°C
EFM32TG11B520F128IQ80-B	128	32	Yes	Yes	63	QFP80	-40 to +125°C
EFM32TG11B540F64GM80-B	64	32	Yes	Yes	67	QFN80	-40 to +85°C
EFM32TG11B540F64GQ80-B	64	32	Yes	Yes	63	QFP80	-40 to +85°C
EFM32TG11B540F64IM80-B	64	32	Yes	Yes	67	QFN80	-40 to +125°C
EFM32TG11B540F64IQ80-B	64	32	Yes	Yes	63	QFP80	-40 to +125°C
EFM32TG11B520F128GM64-B	128	32	Yes	Yes	53	QFN64	-40 to +85°C
EFM32TG11B520F128GQ64-B	128	32	Yes	Yes	50	QFP64	-40 to +85°C
EFM32TG11B520F128IM64-B	128	32	Yes	Yes	53	QFN64	-40 to +125°C
EFM32TG11B520F128IQ64-B	128	32	Yes	Yes	50	QFP64	-40 to +125°C
EFM32TG11B540F64GM64-B	64	32	Yes	Yes	53	QFN64	-40 to +85°C
EFM32TG11B540F64GQ64-B	64	32	Yes	Yes	50	QFP64	-40 to +85°C
EFM32TG11B540F64IM64-B	64	32	Yes	Yes	53	QFN64	-40 to +125°C
EFM32TG11B540F64IQ64-B	64	32	Yes	Yes	50	QFP64	-40 to +125°C
EFM32TG11B520F128GQ48-B	128	32	Yes	Yes	34	QFP48	-40 to +85°C
EFM32TG11B520F128IQ48-B	128	32	Yes	Yes	34	QFP48	-40 to +125°C
EFM32TG11B540F64GQ48-B	64	32	Yes	Yes	34	QFP48	-40 to +85°C
EFM32TG11B540F64IQ48-B	64	32	Yes	Yes	34	QFP48	-40 to +125°C
EFM32TG11B520F128GM32-B	128	32	Yes	Yes	22	QFN32	-40 to +85°C
EFM32TG11B520F128IM32-B	128	32	Yes	Yes	22	QFN32	-40 to +125°C
EFM32TG11B540F64GM32-B	64	32	Yes	Yes	22	QFN32	-40 to +85°C
EFM32TG11B540F64IM32-B	64	32	Yes	Yes	22	QFN32	-40 to +125°C
EFM32TG11B320F128GM64-B	128	32	No	Yes	56	QFN64	-40 to +85°C
EFM32TG11B320F128GQ64-B	128	32	No	Yes	53	QFP64	-40 to +85°C
EFM32TG11B320F128IM64-B	128	32	No	Yes	56	QFN64	-40 to +125°C
EFM32TG11B320F128IQ64-B	128	32	No	Yes	53	QFP64	-40 to +125°C
EFM32TG11B340F64GM64-B	64	32	No	Yes	56	QFN64	-40 to +85°C
EFM32TG11B340F64GQ64-B	64	32	No	Yes	53	QFP64	-40 to +85°C
EFM32TG11B340F64IM64-B	64	32	No	Yes	56	QFN64	-40 to +125°C
EFM32TG11B340F64IQ64-B	64	32	No	Yes	53	QFP64	-40 to +125°C

Ordering Code	Flash (kB)	RAM (kB)	DC-DC Con-verter	LCD	GPIO	Package	Temp Range
EFM32TG11B320F128GQ48-B	128	32	No	Yes	37	QFP48	-40 to +85°C
EFM32TG11B320F128IQ48-B	128	32	No	Yes	37	QFP48	-40 to +125°C
EFM32TG11B340F64GQ48-B	64	32	No	Yes	37	QFP48	-40 to +85°C
EFM32TG11B340F64IQ48-B	64	32	No	Yes	37	QFP48	-40 to +125°C
EFM32TG11B120F128GM64-B	128	32	No	No	56	QFN64	-40 to +85°C
EFM32TG11B120F128GQ64-B	128	32	No	No	53	QFP64	-40 to +85°C
EFM32TG11B120F128IM64-B	128	32	No	No	56	QFN64	-40 to +125°C
EFM32TG11B120F128IQ64-B	128	32	No	No	53	QFP64	-40 to +125°C
EFM32TG11B140F64GM64-B	64	32	No	No	56	QFN64	-40 to +85°C
EFM32TG11B140F64GQ64-B	64	32	No	No	53	QFP64	-40 to +85°C
EFM32TG11B140F64IM64-B	64	32	No	No	56	QFN64	-40 to +125°C
EFM32TG11B140F64IQ64-B	64	32	No	No	53	QFP64	-40 to +125°C
EFM32TG11B120F128GQ48-B	128	32	No	No	37	QFP48	-40 to +85°C
EFM32TG11B120F128IQ48-B	128	32	No	No	37	QFP48	-40 to +125°C
EFM32TG11B140F64GQ48-B	64	32	No	No	37	QFP48	-40 to +85°C
EFM32TG11B140F64IQ48-B	64	32	No	No	37	QFP48	-40 to +125°C
EFM32TG11B120F128GM32-B	128	32	No	No	24	QFN32	-40 to +85°C
EFM32TG11B120F128IM32-B	128	32	No	No	24	QFN32	-40 to +125°C
EFM32TG11B140F64GM32-B	64	32	No	No	24	QFN32	-40 to +85°C
EFM32TG11B140F64IM32-B	64	32	No	No	24	QFN32	-40 to +125°C

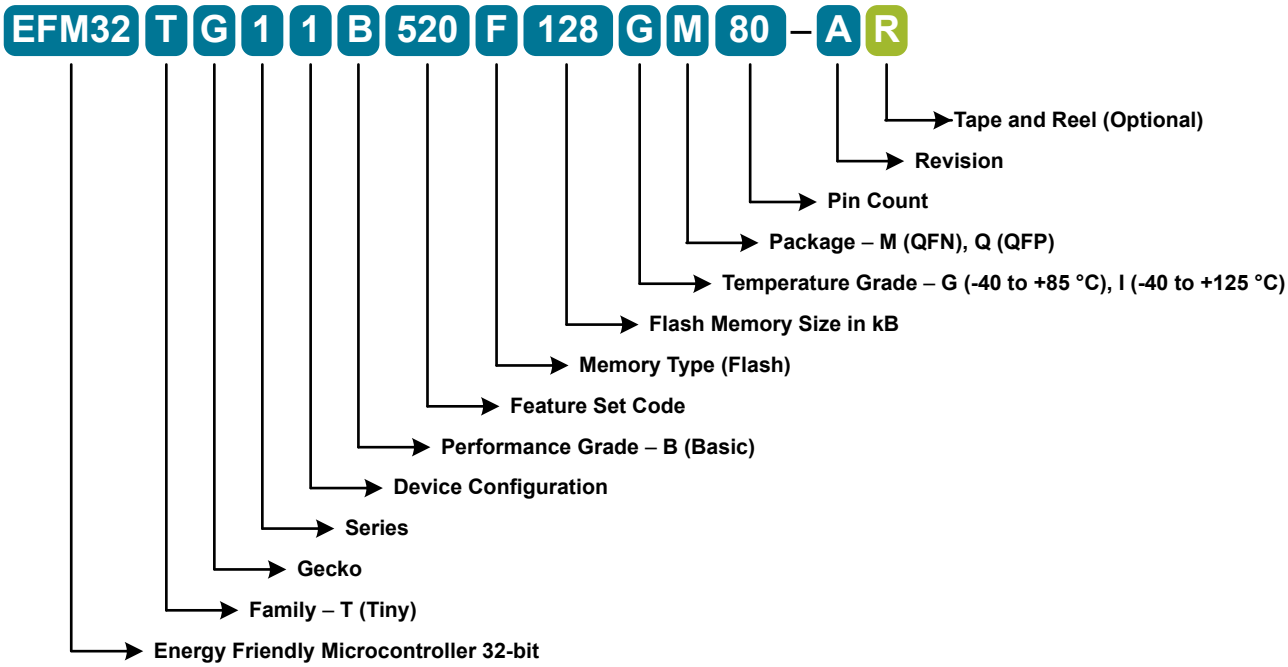

Figure 2.1. Ordering Code Key

Table of Contents

1. Feature List . . . 2

2. Ordering Information . . . 4

3. System Overview . . . 10

3.1 Introduction . . . 10

3.2 Power . . . 11
- 3.2.1 Energy Management Unit (EMU) . . . 11
- 3.2.2 DC-DC Converter . . . 11
- 3.2.3 EM2 and EM3 Power Domains . . . 11

3.3 General Purpose Input/Output (GPIO) . . . 12

3.4 Clocking . . . 12
- 3.4.1 Clock Management Unit (CMU) . . . 12
- 3.4.2 Internal and External Oscillators . . . 12

3.5 Counters/Timers and PWM . . . 12
- 3.5.1 Timer/Counter (TIMER) . . . 12
- 3.5.2 Wide Timer/Counter (WTIMER) . . . 12
- 3.5.3 Real Time Counter and Calendar (RTCC) . . . 12
- 3.5.4 Low Energy Timer (LETIMER) . . . 13
- 3.5.5 Ultra Low Power Wake-up Timer (CRYOTIMER) . . . 13
- 3.5.6 Pulse Counter (PCNT) . . . 13
- 3.5.7 Watchdog Timer (WDOG) . . . 13

3.6 Communications and Other Digital Peripherals . . . 13
- 3.6.1 Universal Synchronous/Asynchronous Receiver/Transmitter (USART) . . . 13
- 3.6.2 Universal Asynchronous Receiver/Transmitter (UART) . . . 13
- 3.6.3 Low Energy Universal Asynchronous Receiver/Transmitter (LEUART) . . . 13
- 3.6.4 Inter-Integrated Circuit Interface (I^2C) . . . 13
- 3.6.5 Controller Area Network (CAN) . . . 14
- 3.6.6 Peripheral Reflex System (PRS) . . . 14
- 3.6.7 Low Energy Sensor Interface (LESENSE) . . . 14

3.7 Security Features . . . 14
- 3.7.1 GPCRC (General Purpose Cyclic Redundancy Check) . . . 14
- 3.7.2 Crypto Accelerator (CRYPTO) . . . 14
- 3.7.3 True Random Number Generator (TRNG) . . . 14
- 3.7.4 Security Management Unit (SMU) . . . 14

3.8 Analog . . . 14
- 3.8.1 Analog Port (APORT) . . . 14
- 3.8.2 Analog Comparator (ACMP) . . . 15
- 3.8.3 Analog to Digital Converter (ADC) . . . 15
- 3.8.4 Capacitive Sense (CSEN) . . . 15
- 3.8.5 Digital to Analog Converter (VDAC) . . . 15
- 3.8.6 Operational Amplifiers . . . 15
- 3.8.7 Liquid Crystal Display Driver (LCD) . . . 15

3.9 Reset Management Unit (RMU) . . . 15

3.10 Core and Memory . . . 16
3.10.1 Processor Core . . . 16
3.10.2 Memory System Controller (MSC) . . . 16
3.10.3 Linked Direct Memory Access Controller (LDMA) . . . 16
3.10.4 Bootloader . . . 16
3.11 Memory Map . . . 17
3.12 Configuration Summary . . . 18
4. Electrical Specifications . . . 19
4.1 Electrical Characteristics . . . 19
4.1.1 Absolute Maximum Ratings . . . 19
4.1.2 Operating Conditions . . . 20
4.1.3 Thermal Characteristics . . . 22
4.1.4 DC-DC Converter . . . 23
4.1.5 Backup Supply Domain . . . 25
4.1.6 Current Consumption . . . 26
4.1.7 Wake Up Times . . . 33
4.1.8 Brown Out Detector (BOD) . . . 34
4.1.9 Oscillators . . . 35
4.1.10 Flash Memory Characteristics . . . 41
4.1.11 General-Purpose I/O (GPIO) . . . 42
4.1.12 Voltage Monitor (VMON) . . . 44
4.1.13 Analog to Digital Converter (ADC) . . . 45
4.1.14 Analog Comparator (ACMP) . . . 47
4.1.15 Digital to Analog Converter (VDAC) . . . 50
4.1.16 Capacitive Sense (CSEN) . . . 53
4.1.17 Operational Amplifier (OPAMP) . . . 55
4.1.18 LCD Driver . . . 58
4.1.19 Pulse Counter (PCNT) . . . 59
4.1.20 Analog Port (APORT) . . . 59
4.1.21 I2C . . . 60
4.1.22 USART SPI . . . 63
4.2 Typical Performance Curves . . . 64
4.2.1 Supply Current . . . 65
4.2.2 DC-DC Converter . . . 70
5. Pin Definitions . . . 72
5.1 EFM32TG11B5xx in QFP80 Device Pinout . . . 72
5.2 EFM32TG11B5xx in QFN80 Device Pinout . . . 75
5.3 EFM32TG11B5xx in QFP64 Device Pinout . . . 78
5.4 EFM32TG11B3xx in QFP64 Device Pinout . . . 80
5.5 EFM32TG11B1xx in QFP64 Device Pinout . . . 82
5.6 EFM32TG11B5xx in QFN64 Device Pinout . . . 84
5.7 EFM32TG11B3xx in QFN64 Device Pinout . . . 86
5.8 EFM32TG11B1xx in QFN64 Device Pinout . . . 88

5.9 EFM32TG11B5xx in QFP48 Device Pinout 90
5.10 EFM32TG11B3xx in QFP48 Device Pinout 92
5.11 EFM32TG11B1xx in QFP48 Device Pinout 94
5.12 EFM32TG11B5xx in QFN32 Device Pinout 96
5.13 EFM32TG11B1xx in QFN32 Device Pinout 98
5.14 GPIO Functionality Table 100
5.15 Alternate Functionality Overview 104
5.16 Analog Port (APORT) Client Maps 115
6. TQFP80 Package Specifications 125
6.1 TQFP80 Package Dimensions 125
6.2 TQFP80 PCB Land Pattern 127
6.3 TQFP80 Package Marking 128
7. QFN80 Package Specifications. 129
7.1 QFN80 Package Dimensions 129
7.2 QFN80 PCB Land Pattern 131
7.3 QFN80 Package Marking 133
8. TQFP64 Package Specifications 134
8.1 TQFP64 Package Dimensions 134
8.2 TQFP64 PCB Land Pattern 136
8.3 TQFP64 Package Marking 137
9. QFN64 Package Specifications. 138
9.1 QFN64 Package Dimensions 138
9.2 QFN64 PCB Land Pattern 140
9.3 QFN64 Package Marking 142
10. TQFP48 Package Specifications 143
10.1 TQFP48 Package Dimensions 143
10.2 TQFP48 PCB Land Pattern 145
10.3 TQFP48 Package Marking 146
11. QFN32 Package Specifications 147
11.1 QFN32 Package Dimensions. 147
11.2 QFN32 PCB Land Pattern. 149
11.3 QFN32 Package Marking 151
12. Revision History. 152

3. System Overview

3.1 Introduction

The Tiny Gecko Series 1 product family is well suited for any battery operated application as well as other systems requiring high performance and low energy consumption. This section gives a short introduction to the MCU system. The detailed functional description can be found in the Tiny Gecko Series 1 Reference Manual. Any behavior that does not conform to the specifications in this data sheet or the functional descriptions in the Tiny Gecko Series 1 Reference Manual are detailed in the EFM32TG11 Errata document.

A block diagram of the Tiny Gecko Series 1 family is shown in Figure 3.1 Detailed EFM32TG11 Block Diagram on page 10. The diagram shows a superset of features available on the family, which vary by OPN. For more information about specific device features, consult Ordering Information.

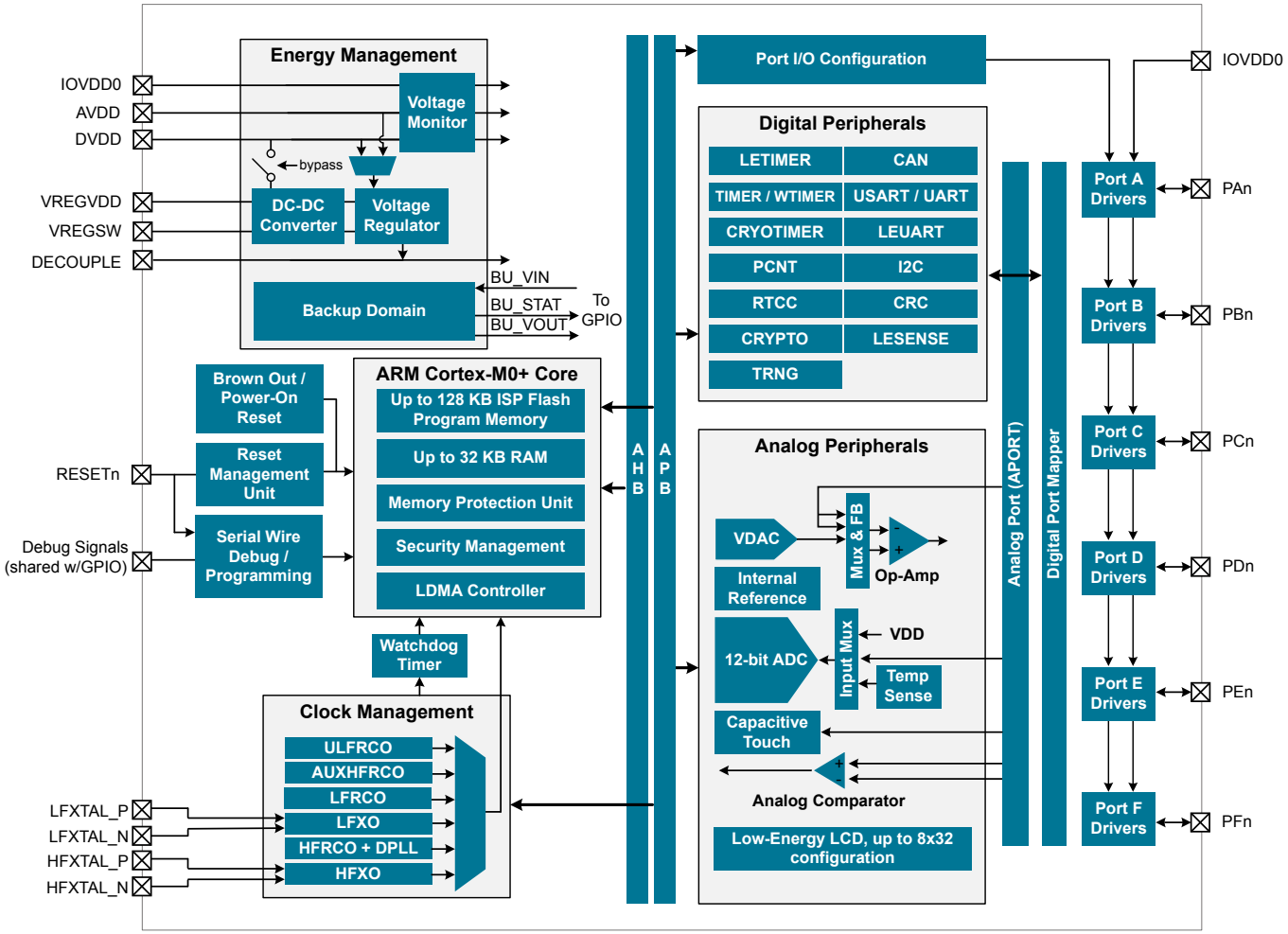

Figure 3.1. Detailed EFM32TG11 Block Diagram

3.2 Power

The EFM32TG11 has an Energy Management Unit (EMU) and efficient integrated regulators to generate internal supply voltages. Only a single external supply voltage is required, from which all internal voltages are created. An optional integrated DC-DC buck regulator can be utilized to further reduce the current consumption. The DC-DC regulator requires one external inductor and one external capacitor.

The EFM32TG11 device family includes support for internal supply voltage scaling, as well as two different power domain groups for peripherals. These enhancements allow for further supply current reductions and lower overall power consumption.

AVDD and VREGVDD need to be 1.8 V or higher for the MCU to operate across all conditions; however the rest of the system will operate down to 1.62 V, including the digital supply and I/O. This means that the device is fully compatible with 1.8 V components. Running from a sufficiently high supply, the device can use the DC-DC to regulate voltage not only for itself, but also for other PCB components, supplying up to a total of 200 mA.

3.2.1 Energy Management Unit (EMU)

The Energy Management Unit manages transitions of energy modes in the device. Each energy mode defines which peripherals and features are available and the amount of current the device consumes. The EMU can also be used to turn off the power to unused RAM blocks, and it contains control registers for the DC-DC regulator and the Voltage Monitor (VMON). The VMON is used to monitor multiple supply voltages. It has multiple channels which can be programmed individually by the user to determine if a sensed supply has fallen below a chosen threshold.

3.2.2 DC-DC Converter

The DC-DC buck converter covers a wide range of load currents and provides up to 90% efficiency in energy modes EM0, EM1, EM2 and EM3, and can supply up to 200 mA to the device and surrounding PCB components. Protection features include programmable current limiting, short-circuit protection, and dead-time protection. The DC-DC converter may also enter bypass mode when the input voltage is too low for efficient operation. In bypass mode, the DC-DC input supply is internally connected directly to its output through a low resistance switch. Bypass mode also supports in-rush current limiting to prevent input supply voltage droops due to excessive output current transients.

3.2.3 EM2 and EM3 Power Domains

The EFM32TG11 has three independent peripheral power domains for use in EM2 and EM3. Two of these domains are dynamic and can be shut down to save energy. Peripherals associated with the two dynamic power domains are listed in Table 3.1 EM2 and EM3 Peripheral Power Subdomains on page 11. If all of the peripherals in a peripheral power domain are unused, the power domain for that group will be powered off in EM2 and EM3, reducing the overall current consumption of the device. Other EM2, EM3, and EM4-capable peripherals and functions not listed in the table below reside on the primary power domain, which is always on in EM2 and EM3.

Table 3.1. EM2 and EM3 Peripheral Power Subdomains

Peripheral Power Domain 1	Peripheral Power Domain 2
ACMP0	ACMP1
PCNT0	CSEN
ADC0	VDAC0
LETIMER0	LEUART0
LESENSE	I2C0
APORT	I2C1
-	IDAC
-	LCD

3.3 General Purpose Input/Output (GPIO)

EFM32TG11 has up to 67 General Purpose Input/Output pins. Each GPIO pin can be individually configured as either an output or input. More advanced configurations including open-drain, open-source, and glitch-filtering can be configured for each individual GPIO pin. The GPIO pins can be overridden by peripheral connections, like SPI communication. Each peripheral connection can be routed to several GPIO pins on the device. The input value of a GPIO pin can be routed through the Peripheral Reflex System to other peripherals. The GPIO subsystem supports asynchronous external pin interrupts.

3.4 Clocking

3.4.1 Clock Management Unit (CMU)

The Clock Management Unit controls oscillators and clocks in the EFM32TG11. Individual enabling and disabling of clocks to all peripherals is performed by the CMU. The CMU also controls enabling and configuration of the oscillators. A high degree of flexibility allows software to optimize energy consumption in any specific application by minimizing power dissipation in unused peripherals and oscillators.

3.4.2 Internal and External Oscillators

The EFM32TG11 supports two crystal oscillators and fully integrates four RC oscillators, listed below.

- A high frequency crystal oscillator (HFXO) with integrated load capacitors, tunable in small steps, provides a precise timing reference for the MCU. Crystal frequencies in the range from 4 to 48 MHz are supported. An external clock source such as a TCXO can also be applied to the HFXO input for improved accuracy over temperature.
- A 32.768 kHz crystal oscillator (LFXO) provides an accurate timing reference for low energy modes.
- An integrated high frequency RC oscillator (HFRCO) is available for the MCU system. The HFRCO employs fast startup at minimal energy consumption combined with a wide frequency range. When crystal accuracy is not required, it can be operated in free-running mode at a number of factory-calibrated frequencies. A digital phase-locked loop (DPLL) feature allows the HFRCO to achieve higher accuracy and stability by referencing other available clock sources such as LFXO and HFXO.
- An integrated auxilliary high frequency RC oscillator (AUXHFRCO) is available for timing the general-purpose ADC with a wide frequency range.
- An integrated low frequency 32.768 kHz RC oscillator (LFRCO) can be used as a timing reference in low energy modes, when crystal accuracy is not required.
- An integrated ultra-low frequency 1 kHz RC oscillator (ULFRCO) is available to provide a timing reference at the lowest energy consumption in low energy modes.

3.5 Counters/Timers and PWM

3.5.1 Timer/Counter (TIMER)

TIMER peripherals keep track of timing, count events, generate PWM outputs and trigger timed actions in other peripherals through the PRS system. The core of each TIMER is a 16-bit counter with up to 4 compare/capture channels. Each channel is configurable in one of three modes. In capture mode, the counter state is stored in a buffer at a selected input event. In compare mode, the channel output reflects the comparison of the counter to a programmed threshold value. In PWM mode, the TIMER supports generation of pulse-width modulation (PWM) outputs of arbitrary waveforms defined by the sequence of values written to the compare registers, with optional dead-time insertion available in timer unit TIMER_0 only.

3.5.2 Wide Timer/Counter (WTIMER)

WTIMER peripherals function just as TIMER peripherals, but are 32 bits wide. They keep track of timing, count events, generate PWM outputs and trigger timed actions in other peripherals through the PRS system. The core of each WTIMER is a 32-bit counter with up to 4 compare/capture channels. Each channel is configurable in one of three modes. In capture mode, the counter state is stored in a buffer at a selected input event. In compare mode, the channel output reflects the comparison of the counter to a programmed threshold value. In PWM mode, the WTIMER supports generation of pulse-width modulation (PWM) outputs of arbitrary waveforms defined by the sequence of values written to the compare registers, with optional dead-time insertion available in timer unit WTIMER_0 only.

3.5.3 Real Time Counter and Calendar (RTCC)

The Real Time Counter and Calendar (RTCC) is a 32-bit counter providing timekeeping in all energy modes. The RTCC includes a Binary Coded Decimal (BCD) calendar mode for easy time and date keeping. The RTCC can be clocked by any of the on-board oscillators with the exception of the AUXHFRCO, and it is capable of providing system wake-up at user defined instances. The RTCC includes 128 bytes of general purpose data retention, allowing easy and convenient data storage in all energy modes down to EM4H.

3.5.4 Low Energy Timer (LETIMER)

The unique LETIMER is a 16-bit timer that is available in energy mode EM2 Deep Sleep in addition to EM1 Sleep and EM0 Active. This allows it to be used for timing and output generation when most of the device is powered down, allowing simple tasks to be performed while the power consumption of the system is kept at an absolute minimum. The LETIMER can be used to output a variety of waveforms with minimal software intervention. The LETIMER is connected to the Real Time Counter and Calendar (RTCC), and can be configured to start counting on compare matches from the RTCC.

3.5.5 Ultra Low Power Wake-up Timer (CRYOTIMER)

The CRYOTIMER is a 32-bit counter that is capable of running in all energy modes. It can be clocked by either the 32.768 kHz crystal oscillator (LFXO), the 32.768 kHz RC oscillator (LFRCO), or the 1 kHz RC oscillator (ULFRCO). It can provide periodic Wakeup events and PRS signals which can be used to wake up peripherals from any energy mode. The CRYOTIMER provides a wide range of interrupt periods, facilitating flexible ultra-low energy operation.

3.5.6 Pulse Counter (PCNT)

The Pulse Counter (PCNT) peripheral can be used for counting pulses on a single input or to decode quadrature encoded inputs. The clock for PCNT is selectable from either an external source on pin PCTNn_S0IN or from an internal timing reference, selectable from among any of the internal oscillators, except the AUXHFRCO. The peripheral may operate in energy mode EM0 Active, EM1 Sleep, EM2 Deep Sleep, and EM3 Stop.

3.5.7 Watchdog Timer (WDOG)

The watchdog timer can act both as an independent watchdog or as a watchdog synchronous with the CPU clock. It has windowed monitoring capabilities, and can generate a reset or different interrupts depending on the failure mode of the system. The watchdog can also monitor autonomous systems driven by PRS.

3.6 Communications and Other Digital Peripherals

3.6.1 Universal Synchronous/Asynchronous Receiver/Transmitter (USART)

The Universal Synchronous/Asynchronous Receiver/Transmitter is a flexible serial I/O interface. It supports full duplex asynchronous UART communication with hardware flow control as well as RS-485, SPI, MicroWire and 3-wire. It can also interface with devices supporting:

- ISO7816 SmartCards
- IrDA
- I^2S

3.6.2 Universal Asynchronous Receiver/Transmitter (UART)

The Universal Asynchronous Receiver/Transmitter is a subset of the USART peripheral, supporting full duplex asynchronous UART communication with hardware flow control and RS-485.

3.6.3 Low Energy Universal Asynchronous Receiver/Transmitter (LEUART)

The unique LEUART™ provides two-way UART communication on a strict power budget. Only a 32.768 kHz clock is needed to allow UART communication up to 9600 baud. The LEUART includes all necessary hardware to make asynchronous serial communication possible with a minimum of software intervention and energy consumption.

3.6.4 Inter-Integrated Circuit Interface (I^2C)

The I^2C interface enables communication between the MCU and a serial I^2C bus. It is capable of acting as both a master and a slave and supports multi-master buses. Standard-mode, fast-mode and fast-mode plus speeds are supported, allowing transmission rates from 10 kbit/s up to 1 Mbit/s. Slave arbitration and timeouts are also available, allowing implementation of an SMBus-compliant system. The interface provided to software by the I^2C peripheral allows precise timing control of the transmission process and highly automated transfers. Automatic recognition of slave addresses is provided in active and low energy modes.

3.6.5 Controller Area Network (CAN)

The CAN peripheral provides support for communication at up to 1 Mbps over CAN protocol version 2.0 part A and B. It includes 32 message objects with independent identifier masks and retains message RAM in EM2. Automatic retransmittion may be disabled in order to support Time Triggered CAN applications.

3.6.6 Peripheral Reflex System (PRS)

The Peripheral Reflex System provides a communication network between different peripherals without software involvement. Peripherals producing Reflex signals are called producers. The PRS routes Reflex signals from producers to consumer peripherals, which in turn perform actions in response. Edge triggers and other functionality such as simple logic operations (AND, OR, NOT) can be applied by the PRS to the signals. The PRS allows peripheral to act autonomously without waking the MCU core, saving power.

3.6.7 Low Energy Sensor Interface (LESENSE)

The Low Energy Sensor Interface LESENSE™ is a highly configurable sensor interface with support for up to 16 individually configurable sensors. By controlling the analog comparators, ADC, and DAC, LESENSE is capable of supporting a wide range of sensors and measurement schemes, and can for instance measure LC sensors, resistive sensors and capacitive sensors. LESENSE also includes a programmable finite state machine which enables simple processing of measurement results without CPU intervention. LESENSE is available in energy mode EM2, in addition to EM0 and EM1, making it ideal for sensor monitoring in applications with a strict energy budget.

3.7 Security Features

3.7.1 GPCRC (General Purpose Cyclic Redundancy Check)

The GPCRC block implements a Cyclic Redundancy Check (CRC) function. It supports both 32-bit and 16-bit polynomials. The supported 32-bit polynomial is 0x04C11DB7 (IEEE 802.3), while the 16-bit polynomial can be programmed to any value, depending on the needs of the application.

3.7.2 Crypto Accelerator (CRYPTO)

The Crypto Accelerator is a fast and energy-efficient autonomous hardware encryption and decryption accelerator. Tiny Gecko Series 1 devices support AES encryption and decryption with 128- or 256-bit keys, ECC over both GF(P) and GF(2^m), and SHA-1 and SHA-2 (SHA-224 and SHA-256).

Supported block cipher modes of operation for AES include: ECB, CTR, CBC, PCBC, CFB, OFB, GCM, CBC-MAC, GMAC and CCM.

Supported ECC NIST recommended curves include P-192, P-224, P-256, K-163, K-233, B-163 and B-233.

The CRYPTO peripheral allows fast processing of GCM (AES), ECC and SHA with little CPU intervention. CRYPTO also provides trigger signals for DMA read and write operations.

3.7.3 True Random Number Generator (TRNG)

The TRNG is a non-deterministic random number generator based on a full hardware solution. The TRNG is validated with NIST800-22 and AIS-31 test suites as well as being suitable for FIPS 140-2 certification (for the purposes of cryptographic key generation).

3.7.4 Security Management Unit (SMU)

The Security Management Unit (SMU) allows software to set up fine-grained security for peripheral access, which is not possible in the Memory Protection Unit (MPU). Peripherals may be secured by hardware on an individual basis, such that only priveleged accesses to the peripheral's register interface will be allowed. When an access fault occurs, the SMU reports the specific peripheral involved and can optionally generate an interrupt.

3.8 Analog

3.8.1 Analog Port (APORT)

The Analog Port (APORT) is an analog interconnect matrix allowing access to many analog peripherals on a flexible selection of pins. Each APORT bus consists of analog switches connected to a common wire. Since many clients can operate differentially, buses are grouped by X/Y pairs.

3.8.2 Analog Comparator (ACMP)

The Analog Comparator is used to compare the voltage of two analog inputs, with a digital output indicating which input voltage is higher. Inputs are selected from among internal references and external pins. The tradeoff between response time and current consumption is configurable by software. Two 6-bit reference dividers allow for a wide range of internally-programmable reference sources. The ACMP can also be used to monitor the supply voltage. An interrupt can be generated when the supply falls below or rises above the programmable threshold.

3.8.3 Analog to Digital Converter (ADC)

The ADC is a Successive Approximation Register (SAR) architecture, with a resolution of up to 12 bits at up to 1 Msps. The output sample resolution is configurable and additional resolution is possible using integrated hardware for averaging over multiple samples. The ADC includes integrated voltage references and an integrated temperature sensor. Inputs are selectable from a wide range of sources, including pins configurable as either single-ended or differential.

3.8.4 Capacitive Sense (CSEN)

The CSEN peripheral is a dedicated Capacitive Sensing block for implementing touch-sensitive user interface elements such a switches and sliders. The CSEN peripheral uses a charge ramping measurement technique, which provides robust sensing even in adverse conditions including radiated noise and moisture. The peripheral can be configured to take measurements on a single port pin or scan through multiple pins and store results to memory through DMA. Several channels can also be shorted together to measure the combined capacitance or implement wake-on-touch from very low energy modes. Hardware includes a digital accumulator and an averaging filter, as well as digital threshold comparators to reduce software overhead.

3.8.5 Digital to Analog Converter (VDAC)

The Digital to Analog Converter (VDAC) can convert a digital value to an analog output voltage. The VDAC is a fully differential, 500 ksps, 12-bit converter. The opamps are used in conjunction with the VDAC, to provide output buffering. One opamp is used per single-ended channel, or two opamps are used to provide differential outputs. The VDAC may be used for a number of different applications such as sensor interfaces or sound output. The VDAC can generate high-resolution analog signals while the MCU is operating at low frequencies and with low total power consumption. Using DMA and a timer, the VDAC can be used to generate waveforms without any CPU intervention. The VDAC is available in all energy modes down to and including EM3.

3.8.6 Operational Amplifiers

The opamps are low power amplifiers with a high degree of flexibility targeting a wide variety of standard opamp application areas, and are available down to EM3. With flexible built-in programming for gain and interconnection they can be configured to support multiple common opamp functions. All pins are also available externally for filter configurations. Each opamp has a rail to rail input and a rail to rail output. They can be used in conjunction with the VDAC peripheral or in stand-alone configurations. The opamps save energy, PCB space, and cost as compared with standalone opamps because they are integrated on-chip.

3.8.7 Liquid Crystal Display Driver (LCD)

The LCD driver is capable of driving a segmented LCD display with up to 8x32 segments. A voltage boost function enables it to provide the LCD display with higher voltage than the supply voltage for the device. A patented charge redistribution driver can reduce the LCD peripheral supply current by up to 40%. In addition, an animation feature can run custom animations on the LCD display without any CPU intervention. The LCD driver can also remain active even in Energy Mode 2 and provides a Frame Counter interrupt that can wake-up the device on a regular basis for updating data.

3.9 Reset Management Unit (RMU)

The RMU is responsible for handling reset of the EFM32TG11. A wide range of reset sources are available, including several power supply monitors, pin reset, software controlled reset, core lockup reset, and watchdog reset.

3.10 Core and Memory

3.10.1 Processor Core

The ARM Cortex-M processor includes a 32-bit RISC processor integrating the following features and tasks in the system:

- ARM Cortex-M0+ RISC processor
- Memory Protection Unit (MPU) supporting up to 8 memory segments
- Micro-Trace Buffer (MTB)
- Up to 128 kB flash program memory
- Up to 32 kB RAM data memory
- Configuration and event handling of all peripherals
- 2-pin Serial-Wire debug interface

3.10.2 Memory System Controller (MSC)

The Memory System Controller (MSC) is the program memory unit of the microcontroller. The flash memory is readable and writable from both the Cortex-M and DMA. The flash memory is divided into two blocks; the main block and the information block. Program code is normally written to the main block, whereas the information block is available for special user data and flash lock bits. There is also a read-only page in the information block containing system and device calibration data. Read and write operations are supported in energy modes EM0 Active and EM1 Sleep.

3.10.3 Linked Direct Memory Access Controller (LDMA)

The Linked Direct Memory Access (LDMA) controller allows the system to perform memory operations independently of software. This reduces both energy consumption and software workload. The LDMA allows operations to be linked together and staged, enabling sophisticated operations to be implemented.

3.10.4 Bootloader

All devices come pre-programmed with a UART bootloader. This bootloader resides in flash and can be erased if it is not needed. More information about the bootloader protocol and usage can be found in *AN0003: UART Bootloader*. Application notes can be found on the Silicon Labs website (www.silabs.com/32bit-appnotes) or within Simplicity Studio in the [**Documentation**] area.

3.11 Memory Map

The EFM32TG11 memory map is shown in the figures below. RAM and flash sizes are for the largest memory configuration.

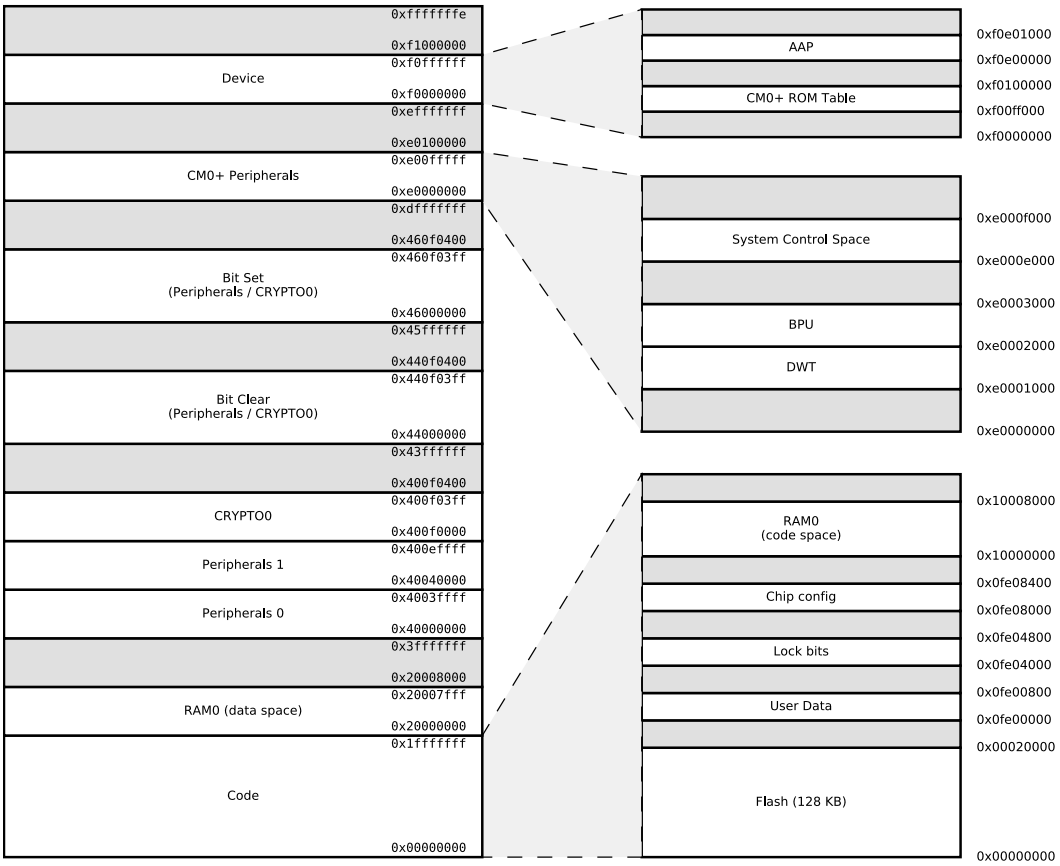

Figure 3.2. EFM32TG11 Memory Map — Core Peripherals and Code Space

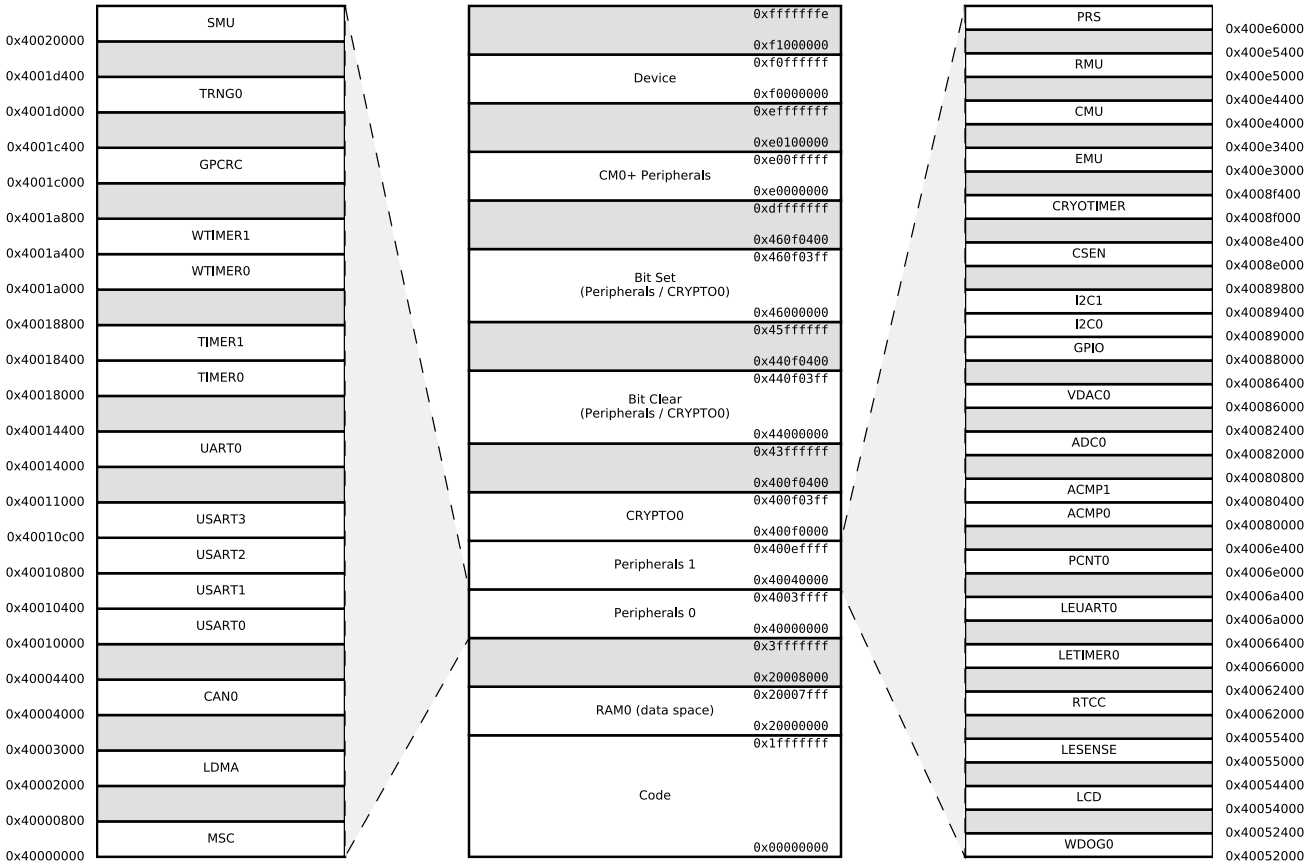

Figure 3.3. EFM32TG11 Memory Map — Peripherals

3.12 Configuration Summary

The features of the EFM32TG11 are a subset of the feature set described in the device reference manual. The table below describes device specific implementation of the features. Remaining peripherals support full configuration.

Table 3.2. Configuration Summary

Peripheral	Configuration	Pin Connections
USART0	IrDA, SmartCard	US0_TX, US0_RX, US0_CLK, US0_CS
USART1	I^2S, SmartCard	US1_TX, US1_RX, US1_CLK, US1_CS
USART2	IrDA, SmartCard, High-Speed	US2_TX, US2_RX, US2_CLK, US2_CS
USART3	I^2S, SmartCard	US3_TX, US3_RX, US3_CLK, US3_CS
TIMER0	with DTI	TIM0_CC[2:0], TIM0_CDTI[2:0]
TIMER1	-	TIM1_CC[3:0]
WTIMER0	with DTI	WTIM0_CC[2:0], WTIM0_CDTI[2:0]
WTIMER1	-	WTIM1_CC[3:0]

4. Electrical Specifications

4.1 Electrical Characteristics

All electrical parameters in all tables are specified under the following conditions, unless stated otherwise:

- Typical values are based on T_{AMB}=25 °C and V_{DD}= 3.3 V, by production test and/or technology characterization.
- Minimum and maximum values represent the worst conditions across supply voltage, process variation, and operating temperature, unless stated otherwise.

Refer to 4.1.2.1 General Operating Conditions for more details about operational supply and temperature limits.

4.1.1 Absolute Maximum Ratings

Stresses above those listed below may cause permanent damage to the device. This is a stress rating only and functional operation of the devices at those or any other conditions above those indicated in the operation listings of this specification is not implied. Exposure to maximum rating conditions for extended periods may affect device reliability. For more information on the available quality and reliability data, see the Quality and Reliability Monitor Report at http://www.silabs.com/support/quality/pages/default.aspx.

Table 4.1. Absolute Maximum Ratings

Parameter	Symbol	Test Condition	Min	Typ	Max	Unit
Storage temperature range	T_{STG}		-50	—	150	°C
Voltage on any supply pin	V_{DDMAX}		-0.3	—	3.8	V
Voltage ramp rate on any supply pin	$V_{DDRAMPMAX}$		—	—	1	V / µs
DC voltage on any GPIO pin	V_{DIGPIN}	5V tolerant GPIO pins[1 2 3]	-0.3	—	Min of 5.25 and IOVDD +2	V
		LCD pins[3]	-0.3	—	Min of 3.8 and IOVDD +2	V
		Standard GPIO pins	-0.3	—	IOVDD+0.3	V
Total current into VDD power lines	I_{VDDMAX}	Source	—	—	200	mA
Total current into VSS ground lines	I_{VSSMAX}	Sink	—	—	200	mA
Current per I/O pin	I_{IOMAX}	Sink	—	—	50	mA
		Source	—	—	50	mA
Current for all I/O pins	$I_{IOALLMAX}$	Sink	—	—	200	mA
		Source	—	—	200	mA
Junction temperature	T_J	-G grade devices	-40	—	105	°C
		-I grade devices	-40	—	125	°C

Note:

1. When a GPIO pin is routed to the analog block through the APORT, the maximum voltage = IOVDD.
2. Valid for IOVDD in valid operating range or when IOVDD is undriven (high-Z). If IOVDD is connected to a low-impedance source below the valid operating range (e.g. IOVDD shorted to VSS), the pin voltage maximum is IOVDD + 0.3 V, to avoid exceeding the maximum IO current specifications.
3. To operate above the IOVDD supply rail, over-voltage tolerance must be enabled according to the GPIO_Px_OVTDIS register. Pins with over-voltage tolerance disabled have the same limits as Standard GPIO.

4.1.2 Operating Conditions

When assigning supply sources, the following requirements must be observed:

- VREGVDD must be greater than or equal to AVDD, DVDD and all IOVDD supplies.
- VREGVDD = AVDD
- DVDD ≤ AVDD
- IOVDD ≤ AVDD

4.1.2.1 General Operating Conditions

Table 4.2. General Operating Conditions

Parameter	Symbol	Test Condition	Min	Typ	Max	Unit
Operating ambient temperature range[1]	T_A	-G temperature grade	-40	25	85	°C
		-I temperature grade	-40	25	125	°C
AVDD supply voltage[2]	V_{AVDD}		1.8	3.3	3.8	V
VREGVDD operating supply voltage[2 3]	$V_{VREGVDD}$	DCDC in regulation	2.4	3.3	3.8	V
		DCDC in bypass, 50mA load	1.8	3.3	3.8	V
		DCDC not in use. DVDD externally shorted to VREGVDD	1.8	3.3	3.8	V
VREGVDD current	$I_{VREGVDD}$	DCDC in bypass, T ≤ 85 °C	—	—	200	mA
		DCDC in bypass, T > 85 °C	—	—	100	mA
DVDD operating supply voltage	V_{DVDD}		1.62	—	$V_{VREGVDD}$	V
IOVDD operating supply voltage	V_{IOVDD}	All IOVDD pins[4]	1.62	—	$V_{VREGVDD}$	V
DECOUPLE output capacitor[5 6]	$C_{DECOUPLE}$		0.75	1.0	2.75	µF
HFCORECLK frequency	f_{CORE}	VSCALE2, MODE = WS1	—	—	48	MHz
		VSCALE2, MODE = WS0	—	—	25	MHz
		VSCALE0, MODE = WS1	—	—	20	MHz
		VSCALE0, MODE = WS0	—	—	10	MHz
HFCLK frequency	f_{HFCLK}	VSCALE2	—	—	48	MHz
		VSCALE0	—	—	20	MHz
HFSRCCLK frequency	$f_{HFSRCCLK}$	VSCALE2	—	—	48	MHz
		VSCALE0	—	—	20	MHz
HFBUSCLK frequency	$f_{HFBUSCLK}$	VSCALE2	—	—	48	MHz
		VSCALE0	—	—	20	MHz
HFPERCLK frequency	$f_{HFPERCLK}$	VSCALE2	—	—	48	MHz
		VSCALE0	—	—	20	MHz
HFPERBCLK frequency	$f_{HFPERBCLK}$	VSCALE2	—	—	48	MHz
		VSCALE0	—	—	20	MHz
HFPERCCLK frequency	$f_{HFPERCCLK}$	VSCALE2	—	—	48	MHz
		VSCALE0	—	—	20	MHz

Parameter	Symbol	Test Condition	Min	Typ	Max	Unit

Note:

1. The maximum limit on T_A may be lower due to device self-heating, which depends on the power dissipation of the specific application. T_A (max) = T_J (max) - ($THETA_{JA}$ x PowerDissipation). Refer to the Absolute Maximum Ratings table and the Thermal Characteristics table for T_J and $THETA_{JA}$.
2. VREGVDD must be tied to AVDD. Both VREGVDD and AVDD minimum voltages must be satisfied for the part to operate.
3. The minimum voltage required in bypass mode is calculated using R_{BYP} from the DCDC specification table. Requirements for other loads can be calculated as $V_{DVDD_min}+I_{LOAD} * R_{BYP_max}$.
4. When the CSEN peripheral is used with chopping enabled (CSEN_CTRL_CHOPEN = ENABLE), IOVDD must be equal to AVDD.
5. The system designer should consult the characteristic specs of the capacitor used on DECOUPLE to ensure its capacitance value stays within the specified bounds across temperature and DC bias.
6. VSCALE0 to VSCALE2 voltage change transitions occur at a rate of 10 mV / usec for approximately 20 usec. During this transition, peak currents will be dependent on the value of the DECOUPLE output capacitor, from 35 mA (with a 1 µF capacitor) to 70 mA (with a 2.7 µF capacitor).

4.1.3 Thermal Characteristics

Table 4.3. Thermal Characteristics

Parameter	Symbol	Test Condition	Min	Typ	Max	Unit
Thermal resistance, QFN32 Package	$THETA_{JA_QFN32}$	4-Layer PCB, Air velocity = 0 m/s	—	25.7	—	°C/W
		4-Layer PCB, Air velocity = 1 m/s	—	23.2	—	°C/W
		4-Layer PCB, Air velocity = 2 m/s	—	21.3	—	°C/W
Thermal resistance, TQFP48 Package	$THETA_{JA_TQFP48}$	4-Layer PCB, Air velocity = 0 m/s	—	44.1	—	°C/W
		4-Layer PCB, Air velocity = 1 m/s	—	43.5	—	°C/W
		4-Layer PCB, Air velocity = 2 m/s	—	42.3	—	°C/W
Thermal resistance, QFN64 Package	$THETA_{JA_QFN64}$	4-Layer PCB, Air velocity = 0 m/s	—	20.9	—	°C/W
		4-Layer PCB, Air velocity = 1 m/s	—	18.2	—	°C/W
		4-Layer PCB, Air velocity = 2 m/s	—	16.4	—	°C/W
Thermal resistance, TQFP64 Package	$THETA_{JA_TQFP64}$	4-Layer PCB, Air velocity = 0 m/s	—	37.3	—	°C/W
		4-Layer PCB, Air velocity = 1 m/s	—	35.6	—	°C/W
		4-Layer PCB, Air velocity = 2 m/s	—	33.8	—	°C/W
Thermal resistance, QFN80 Package	$THETA_{JA_QFN80}$	4-Layer PCB, Air velocity = 0 m/s	—	20.9	—	°C/W
		4-Layer PCB, Air velocity = 1 m/s	—	18.2	—	°C/W
		4-Layer PCB, Air velocity = 2 m/s	—	16.4	—	°C/W
Thermal resistance, TQFP80 Package	$THETA_{JA_TQFP80}$	4-Layer PCB, Air velocity = 0 m/s	—	49.3	—	°C/W
		4-Layer PCB, Air velocity = 1 m/s	—	44.5	—	°C/W
		4-Layer PCB, Air velocity = 2 m/s	—	42.6	—	°C/W

4.1.4 DC-DC Converter

Test conditions: L_DCDC=4.7 µH (Murata LQH3NPN4R7MM0L), C_DCDC=4.7 µF (Samsung CL10B475KQ8NQNC), V_DCDC_I=3.3 V, V_DCDC_O=1.8 V, I_DCDC_LOAD=50 mA, Heavy Drive configuration, F_DCDC_LN=7 MHz, unless otherwise indicated.

Table 4.4. DC-DC Converter

Parameter	Symbol	Test Condition	Min	Typ	Max	Unit
Input voltage range	V_{DCDC_I}	Bypass mode, I_{DCDC_LOAD} = 50 mA	1.8	—	$V_{VREGVDD_MAX}$	V
		Low noise (LN) mode, 1.8 V output, I_{DCDC_LOAD} = 100 mA, or Low power (LP) mode, 1.8 V output, I_{DCDC_LOAD} = 10 mA	2.4	—	$V_{VREGVDD_MAX}$	V
		Low noise (LN) mode, 1.8 V output, I_{DCDC_LOAD} = 200 mA	2.6	—	$V_{VREGVDD_MAX}$	V
Output voltage programmable range[1]	V_{DCDC_O}		1.8	—	$V_{VREGVDD}$	V
Regulation DC accuracy	ACC_{DC}	Low Noise (LN) mode, 1.8 V target output	1.7	—	1.9	V
Regulation window[2]	WIN_{REG}	Low Power (LP) mode, LPCMPBIASEMxx[3] = 0, 1.8 V target output, I_{DCDC_LOAD} ≤ 75 µA	1.63	—	2.2	V
		Low Power (LP) mode, LPCMPBIASEMxx[3] = 3, 1.8 V target output, I_{DCDC_LOAD} ≤ 10 mA	1.63	—	2.1	V
Steady-state output ripple	V_R		—	3	—	mVpp
Output voltage under/overshoot	V_{OV}	CCM Mode (LNFORCECCM[3] = 1), Load changes between 0 mA and 100 mA	—	25	60	mV
		DCM Mode (LNFORCECCM[3] = 0), Load changes between 0 mA and 10 mA	—	45	90	mV
		Overshoot during LP to LN CCM/DCM mode transitions compared to DC level in LN mode	—	200	—	mV
		Undershoot during BYP/LP to LN CCM (LNFORCECCM[3] = 1) mode transitions compared to DC level in LN mode	—	40	—	mV
		Undershoot during BYP/LP to LN DCM (LNFORCECCM[3] = 0) mode transitions compared to DC level in LN mode	—	100	—	mV
DC line regulation	V_{REG}	Input changes between $V_{VREGVDD_MAX}$ and 2.4 V	—	0.1	—	%
DC load regulation	I_{REG}	Load changes between 0 mA and 100 mA in CCM mode	—	0.1	—	%

Parameter	Symbol	Test Condition	Min	Typ	Max	Unit
Max load current	I_{LOAD_MAX}	Low noise (LN) mode, Heavy Drive[4], T ≤ 85 °C	—	—	200	mA
		Low noise (LN) mode, Heavy Drive[4], T > 85 °C	—	—	100	mA
		Low noise (LN) mode, Medium Drive[4]	—	—	100	mA
		Low noise (LN) mode, Light Drive[4]	—	—	50	mA
		Low power (LP) mode, LPCMPBIASEMxx[3] = 0	—	—	75	µA
		Low power (LP) mode, LPCMPBIASEMxx[3] = 3	—	—	10	mA
DCDC nominal output capacitor[5]	C_{DCDC}	25% tolerance	1	4.7	4.7	µF
DCDC nominal output inductor	L_{DCDC}	20% tolerance	4.7	4.7	4.7	µH
Resistance in Bypass mode	R_{BYP}		—	1.2	2.5	Ω

Note:

1. Due to internal dropout, the DC-DC output will never be able to reach its input voltage, $V_{VREGVDD}$.
2. LP mode controller is a hysteretic controller that maintains the output voltage within the specified limits.
3. LPCMPBIASEMxx refers to either LPCMPBIASEM234H in the EMU_DCDCMISCCTRL register or LPCMPBIASEM01 in the EMU_DCDCLOEM01CFG register, depending on the energy mode.
4. Drive levels are defined by configuration of the PFETCNT and NFETCNT registers. Light Drive: PFETCNT=NFETCNT=3; Medium Drive: PFETCNT=NFETCNT=7; Heavy Drive: PFETCNT=NFETCNT=15.
5. Output voltage under/over-shoot and regulation are specified with C_{DCDC} 4.7 µF. Different settings for DCDCLNCOMPCTRL must be used if C_{DCDC} is lower than 4.7 µF. See Application Note AN0948 for details.

4.1.5 Backup Supply Domain

Table 4.5. Backup Supply Domain

Parameter	Symbol	Test Condition	Min	Typ	Max	Unit
Backup supply voltage range	V_{BU_VIN}		1.8	—	3.8	V
PWRRES resistor	R_{PWRRES}	EMU_BUCTRL_PWRRES = RES0	3400	3900	4400	Ω
		EMU_BUCTRL_PWRRES = RES1	1450	1800	2150	Ω
		EMU_BUCTRL_PWRRES = RES2	1000	1330	1700	Ω
		EMU_BUCTRL_PWRRES = RES3	525	815	1100	Ω
Output impedance between BU_VIN and BU_VOUT [1]	R_{BU_VOUT}	EMU_BUCTRL_VOUTRES = STRONG	35	110	185	Ω
		EMU_BUCTRL_VOUTRES = MED	475	775	1075	Ω
		EMU_BUCTRL_VOUTRES = WEAK	5600	6500	7400	Ω
Supply current	I_{BU_VIN}	BU_VIN not powering backup domain, 25 °C	—	10	100	nA
		BU_VIN powering backup domain, 25 °C [2]	—	450	2500	nA

Note:

1. BU_VOUT and BU_STAT signals are not available in all package configurations. Check the device pinout for availability.
2. Additional current required by backup circuitry when backup is active. Includes supply current of backup switches and backup regulator. Does not include supply current required for backed-up circuitry.

4.1.6 Current Consumption

4.1.6.1 Current Consumption 3.3 V without DC-DC Converter

Unless otherwise indicated, typical conditions are: VREGVDD = AVDD = DVDD = 3.3 V. T = 25 °C. DCDC is off. Minimum and maximum values in this table represent the worst conditions across process variation at T = 25 °C.

Table 4.6. Current Consumption 3.3 V without DC-DC Converter

Parameter	Symbol	Test Condition	Min	Typ	Max	Unit
Current consumption in EM0 mode with all peripherals disabled	I_{ACTIVE}	48 MHz crystal, CPU running while loop from flash	—	45	—	µA/MHz
		48 MHz HFRCO, CPU running while loop from flash	—	44	50	µA/MHz
		48 MHz HFRCO, CPU running Prime from flash	—	57	—	µA/MHz
		48 MHz HFRCO, CPU running CoreMark loop from flash	—	71	—	µA/MHz
		32 MHz HFRCO, CPU running while loop from flash	—	45	—	µA/MHz
		26 MHz HFRCO, CPU running while loop from flash	—	46	52	µA/MHz
		16 MHz HFRCO, CPU running while loop from flash	—	50	—	µA/MHz
		1 MHz HFRCO, CPU running while loop from flash	—	161	240	µA/MHz
Current consumption in EM0 mode with all peripherals disabled and voltage scaling enabled	I_{ACTIVE_VS}	19 MHz HFRCO, CPU running while loop from flash	—	41	—	µA/MHz
		1 MHz HFRCO, CPU running while loop from flash	—	145	—	µA/MHz
Current consumption in EM1 mode with all peripherals disabled	I_{EM1}	48 MHz crystal	—	34	—	µA/MHz
		48 MHz HFRCO	—	33	36	µA/MHz
		32 MHz HFRCO	—	34	—	µA/MHz
		26 MHz HFRCO	—	35	40	µA/MHz
		16 MHz HFRCO	—	39	—	µA/MHz
		1 MHz HFRCO	—	150	210	µA/MHz
Current consumption in EM1 mode with all peripherals disabled and voltage scaling enabled	I_{EM1_VS}	19 MHz HFRCO	—	32	—	µA/MHz
		1 MHz HFRCO	—	136	—	µA/MHz
Current consumption in EM2 mode, with voltage scaling enabled	I_{EM2_VS}	Full 32 kB RAM retention and RTCC running from LFXO	—	1.48	—	µA
		Full 32 kB RAM retention and RTCC running from LFRCO	—	1.86	—	µA
		8 kB (1 bank) RAM retention and RTCC running from LFRCO[1]	—	1.59	2.8	µA
Current consumption in EM3 mode, with voltage scaling enabled	I_{EM3_VS}	Full 32 kB RAM retention and CRYOTIMER running from ULFRCO	—	1.23	2.5	µA

Parameter	Symbol	Test Condition	Min	Typ	Max	Unit
Current consumption in EM4H mode, with voltage scaling enabled	I_{EM4H_VS}	128 byte RAM retention, RTCC running from LFXO	—	0.82	—	µA
		128 byte RAM retention, CRYO-TIMER running from ULFRCO	—	0.45	—	µA
		128 byte RAM retention, no RTCC	—	0.45	1	µA
Current consumption in EM4S mode	I_{EM4S}	No RAM retention, no RTCC	—	0.07	0.1	µA
Current consumption of peripheral power domain 1, with voltage scaling enabled	I_{PD1_VS}	Additional current consumption in EM2/3 when any peripherals on power domain 1 are enabled[2]	—	0.18	—	µA
Current consumption of peripheral power domain 2, with voltage scaling enabled	I_{PD2_VS}	Additional current consumption in EM2/3 when any peripherals on power domain 2 are enabled[2]	—	0.18	—	µA

Note:

1. CMU_LFRCOCTRL_ENVREF = 1, CMU_LFRCOCTRL_VREFUPDATE = 1
2. Extra current consumed by power domain. Does not include current associated with the enabled peripherals. See 3.2.3 EM2 and EM3 Power Domains for a list of the peripherals in each power domain.

4.1.6.2 Current Consumption 3.3 V using DC-DC Converter

Unless otherwise indicated, typical conditions are: VREGVDD = AVDD = IOVDD = 3.3 V, DVDD = 1.8 V DC-DC output. T = 25 °C. Minimum and maximum values in this table represent the worst conditions across process variation at T = 25 °C.

Table 4.7. Current Consumption 3.3 V using DC-DC Converter

Parameter	Symbol	Test Condition	Min	Typ	Max	Unit
Current consumption in EM0 mode with all peripherals disabled, DCDC in Low Noise DCM mode[1]	I_{ACTIVE_DCM}	48 MHz crystal, CPU running while loop from flash	—	38	—	µA/MHz
		48 MHz HFRCO, CPU running while loop from flash	—	37	—	µA/MHz
		48 MHz HFRCO, CPU running Prime from flash	—	45	—	µA/MHz
		48 MHz HFRCO, CPU running CoreMark loop from flash	—	53	—	µA/MHz
		32 MHz HFRCO, CPU running while loop from flash	—	43	—	µA/MHz
		26 MHz HFRCO, CPU running while loop from flash	—	47	—	µA/MHz
		16 MHz HFRCO, CPU running while loop from flash	—	61	—	µA/MHz
		1 MHz HFRCO, CPU running while loop from flash	—	587	—	µA/MHz
Current consumption in EM0 mode with all peripherals disabled, DCDC in Low Noise CCM mode[2]	I_{ACTIVE_CCM}	48 MHz crystal, CPU running while loop from flash	—	49	—	µA/MHz
		48 MHz HFRCO, CPU running while loop from flash	—	48	—	µA/MHz
		48 MHz HFRCO, CPU running Prime from flash	—	55	—	µA/MHz
		48 MHz HFRCO, CPU running CoreMark loop from flash	—	63	—	µA/MHz
		32 MHz HFRCO, CPU running while loop from flash	—	60	—	µA/MHz
		26 MHz HFRCO, CPU running while loop from flash	—	68	—	µA/MHz
		16 MHz HFRCO, CPU running while loop from flash	—	96	—	µA/MHz
		1 MHz HFRCO, CPU running while loop from flash	—	1157	—	µA/MHz
Current consumption in EM0 mode with all peripherals disabled, DCDC in LP mode[3]	I_{ACTIVE_LPM}	32 MHz HFRCO, CPU running while loop from flash	—	32	—	µA/MHz
		26 MHz HFRCO, CPU running while loop from flash	—	33	—	µA/MHz
		16 MHz HFRCO, CPU running while loop from flash	—	36	—	µA/MHz
		1 MHz HFRCO, CPU running while loop from flash	—	156	—	µA/MHz

Parameter	Symbol	Test Condition	Min	Typ	Max	Unit
Current consumption in EM0 mode with all peripherals disabled and voltage scaling enabled, DCDC in Low Noise CCM mode[2]	$I_{ACTIVE_CCM_VS}$	19 MHz HFRCO, CPU running while loop from flash	—	81	—	µA/MHz
		1 MHz HFRCO, CPU running while loop from flash	—	1147	—	µA/MHz
Current consumption in EM0 mode with all peripherals disabled and voltage scaling enabled, DCDC in LP mode[3]	$I_{ACTIVE_LPM_VS}$	19 MHz HFRCO, CPU running while loop from flash	—	30	—	µA/MHz
		1 MHz HFRCO, CPU running while loop from flash	—	144	—	µA/MHz
Current consumption in EM1 mode with all peripherals disabled, DCDC in Low Noise DCM mode[1]	I_{EM1_DCM}	48 MHz crystal	—	31	—	µA/MHz
		48 MHz HFRCO	—	30	—	µA/MHz
		32 MHz HFRCO	—	36	—	µA/MHz
		26 MHz HFRCO	—	41	—	µA/MHz
		16 MHz HFRCO	—	54	—	µA/MHz
		1 MHz HFRCO	—	581	—	µA/MHz
Current consumption in EM1 mode with all peripherals disabled, DCDC in Low Power mode[3]	I_{EM1_LPM}	32 MHz HFRCO	—	25	—	µA/MHz
		26 MHz HFRCO	—	26	—	µA/MHz
		16 MHz HFRCO	—	29	—	µA/MHz
		1 MHz HFRCO	—	153	—	µA/MHz
Current consumption in EM1 mode with all peripherals disabled and voltage scaling enabled, DCDC in Low Noise DCM mode[1]	$I_{EM1_DCM_VS}$	19 MHz HFRCO	—	46	—	µA/MHz
		1 MHz HFRCO	—	573	—	µA/MHz
Current consumption in EM1 mode with all peripherals disabled and voltage scaling enabled. DCDC in LP mode[3]	$I_{EM1_LPM_VS}$	19 MHz HFRCO	—	25	—	µA/MHz
		1 MHz HFRCO	—	140	—	µA/MHz
Current consumption in EM2 mode, with voltage scaling enabled, DCDC in LP mode[3]	I_{EM2_VS}	Full 32 kB RAM retention and RTCC running from LFXO	—	1.26	—	µA
		Full 32 kB RAM retention and RTCC running from LFRCO	—	1.54	—	µA
		8 kB (1 bank) RAM retention and RTCC running from LFRCO[4]	—	1.30	—	µA
Current consumption in EM3 mode, with voltage scaling enabled	I_{EM3_VS}	Full 32 kB RAM retention and CRYOTIMER running from ULFRCO	—	0.93	—	µA
Current consumption in EM4H mode, with voltage scaling enabled	I_{EM4H_VS}	128 byte RAM retention, RTCC running from LFXO	—	0.78	—	µA
		128 byte RAM retention, CRYOTIMER running from ULFRCO	—	0.50	—	µA
		128 byte RAM retention, no RTCC	—	0.50	—	µA
Current consumption in EM4S mode	I_{EM4S}	No RAM retention, no RTCC	—	0.06	—	µA

Parameter	Symbol	Test Condition	Min	Typ	Max	Unit
Current consumption of peripheral power domain 1, with voltage scaling enabled, DCDC in LP mode[3]	I_{PD1_VS}	Additional current consumption in EM2/3 when any peripherals on power domain 1 are enabled[5]	—	0.18	—	µA
Current consumption of peripheral power domain 2, with voltage scaling enabled, DCDC in LP mode[3]	I_{PD2_VS}	Additional current consumption in EM2/3 when any peripherals on power domain 2 are enabled[5]	—	0.18	—	µA

Note:

1. DCDC Low Noise DCM Mode = Light Drive (PFETCNT=NFETCNT=3), F=3.0 MHz (RCOBAND=0), ANASW=DVDD.
2. DCDC Low Noise CCM Mode = Light Drive (PFETCNT=NFETCNT=3), F=6.4 MHz (RCOBAND=4), ANASW=DVDD.
3. DCDC Low Power Mode = Medium Drive, LPOSCDIV=1, LPCMPBIASEM234H=0, LPCLIMILIMSEL=1, ANASW=DVDD.
4. CMU_LFRCOCTRL_ENVREF = 1, CMU_LFRCOCTRL_VREFUPDATE = 1
5. Extra current consumed by power domain. Does not include current associated with the enabled peripherals. See 3.2.3 EM2 and EM3 Power Domains for a list of the peripherals in each power domain.

4.1.6.3 Current Consumption 1.8 V without DC-DC Converter

Unless otherwise indicated, typical conditions are: VREGVDD = AVDD = DVDD = 1.8 V. T = 25 °C. DCDC is off. Minimum and maximum values in this table represent the worst conditions across process variation at T = 25 °C.

Table 4.8. Current Consumption 1.8 V without DC-DC Converter

Parameter	Symbol	Test Condition	Min	Typ	Max	Unit
Current consumption in EM0 mode with all peripherals disabled	I_{ACTIVE}	48 MHz crystal, CPU running while loop from flash	—	45	—	µA/MHz
		48 MHz HFRCO, CPU running while loop from flash	—	44	—	µA/MHz
		48 MHz HFRCO, CPU running Prime from flash	—	57	—	µA/MHz
		48 MHz HFRCO, CPU running CoreMark loop from flash	—	71	—	µA/MHz
		32 MHz HFRCO, CPU running while loop from flash	—	45	—	µA/MHz
		26 MHz HFRCO, CPU running while loop from flash	—	46	—	µA/MHz
		16 MHz HFRCO, CPU running while loop from flash	—	49	—	µA/MHz
		1 MHz HFRCO, CPU running while loop from flash	—	158	—	µA/MHz
Current consumption in EM0 mode with all peripherals disabled and voltage scaling enabled	I_{ACTIVE_VS}	19 MHz HFRCO, CPU running while loop from flash	—	41	—	µA/MHz
		1 MHz HFRCO, CPU running while loop from flash	—	142	—	µA/MHz
Current consumption in EM1 mode with all peripherals disabled	I_{EM1}	48 MHz crystal	—	34	—	µA/MHz
		48 MHz HFRCO	—	33	—	µA/MHz
		32 MHz HFRCO	—	34	—	µA/MHz
		26 MHz HFRCO	—	35	—	µA/MHz
		16 MHz HFRCO	—	39	—	µA/MHz
		1 MHz HFRCO	—	147	—	µA/MHz
Current consumption in EM1 mode with all peripherals disabled and voltage scaling enabled	I_{EM1_VS}	19 MHz HFRCO	—	32	—	µA/MHz
		1 MHz HFRCO	—	133	—	µA/MHz
Current consumption in EM2 mode, with voltage scaling enabled	I_{EM2_VS}	Full 32 kB RAM retention and RTCC running from LFXO	—	1.39	—	µA
		Full 32 kB RAM retention and RTCC running from LFRCO	—	1.63	—	µA
		8 kB (1 bank) RAM retention and RTCC running from LFRCO[1]	—	1.37	—	µA
Current consumption in EM3 mode, with voltage scaling enabled	I_{EM3_VS}	Full 32 kB RAM retention and CRYOTIMER running from ULFRCO	—	1.10	—	µA

Parameter	Symbol	Test Condition	Min	Typ	Max	Unit
Current consumption in EM4H mode, with voltage scaling enabled	I_{EM4H_VS}	128 byte RAM retention, RTCC running from LFXO	—	0.75	—	µA
		128 byte RAM retention, CRYO-TIMER running from ULFRCO	—	0.37	—	µA
		128 byte RAM retention, no RTCC	—	0.37	—	µA
Current consumption in EM4S mode	I_{EM4S}	No RAM retention, no RTCC	—	0.05	—	µA
Current consumption of peripheral power domain 1, with voltage scaling enabled	I_{PD1_VS}	Additional current consumption in EM2/3 when any peripherals on power domain 1 are enabled[2]	—	0.18	—	µA
Current consumption of peripheral power domain 2, with voltage scaling enabled	I_{PD2_VS}	Additional current consumption in EM2/3 when any peripherals on power domain 2 are enabled[2]	—	0.18	—	µA

Note:

1. CMU_LFRCOCTRL_ENVREF = 1, CMU_LFRCOCTRL_VREFUPDATE = 1
2. Extra current consumed by power domain. Does not include current associated with the enabled peripherals. See 3.2.3 EM2 and EM3 Power Domains for a list of the peripherals in each power domain.

4.1.7 Wake Up Times

Table 4.9. Wake Up Times

Parameter	Symbol	Test Condition	Min	Typ	Max	Unit
Wake up time from EM1	t_{EM1_WU}		—	3	—	AHB Clocks
Wake up from EM2	t_{EM2_WU}	Code execution from flash	—	10.1	—	µs
		Code execution from RAM	—	3.1	—	µs
Wake up from EM3	t_{EM3_WU}	Code execution from flash	—	10.1	—	µs
		Code execution from RAM	—	3.1	—	µs
Wake up from EM4H[1]	t_{EM4H_WU}	Executing from flash	—	88	—	µs
Wake up from EM4S[1]	t_{EM4S_WU}	Executing from flash	—	282	—	µs
Time from release of reset source to first instruction execution	t_{RESET}	Soft Pin Reset released	—	50	—	µs
		Any other reset released	—	352	—	µs
Power mode scaling time	t_{SCALE}	VSCALE0 to VSCALE2, HFCLK = 19 MHz[2] [3]	—	31.8	—	µs
		VSCALE2 to VSCALE0, HFCLK = 19 MHz[4]	—	4.3	—	µs

Note:

1. Time from wake up request until first instruction is executed. Wakeup results in device reset.
2. Scaling up from VSCALE0 to VSCALE2 requires approximately 30.3 µs + 28 HFCLKs.
3. VSCALE0 to VSCALE2 voltage change transitions occur at a rate of 10 mV/µs for approximately 20 µs. During this transition, peak currents will be dependent on the value of the DECOUPLE output capacitor, from 35 mA (with a 1 µF capacitor) to 70 mA (with a 2.7 µF capacitor).
4. Scaling down from VSCALE2 to VSCALE0 requires approximately 2.8 µs + 29 HFCLKs.

4.1.8 Brown Out Detector (BOD)

Table 4.10. Brown Out Detector (BOD)

Parameter	Symbol	Test Condition	Min	Typ	Max	Unit
DVDD BOD threshold	$V_{DVDDBOD}$	DVDD rising	—	—	1.62	V
		DVDD falling (EM0/EM1)	1.35	—	—	V
		DVDD falling (EM2/EM3)	1.3	—	—	V
DVDD BOD hysteresis	$V_{DVDDBOD_HYST}$		—	18	—	mV
DVDD BOD response time	$t_{DVDDBOD_DELAY}$	Supply drops at 0.1V/µs rate	—	2.4	—	µs
AVDD BOD threshold	$V_{AVDDBOD}$	AVDD rising	—	—	1.8	V
		AVDD falling (EM0/EM1)	1.62	—	—	V
		AVDD falling (EM2/EM3)	1.53	—	—	V
AVDD BOD hysteresis	$V_{AVDDBOD_HYST}$		—	20	—	mV
AVDD BOD response time	$t_{AVDDBOD_DELAY}$	Supply drops at 0.1V/µs rate	—	2.4	—	µs
EM4 BOD threshold	$V_{EM4DBOD}$	AVDD rising	—	—	1.7	V
		AVDD falling	1.45	—	—	V
EM4 BOD hysteresis	V_{EM4BOD_HYST}		—	25	—	mV
EM4 BOD response time	t_{EM4BOD_DELAY}	Supply drops at 0.1V/µs rate	—	300	—	µs

4.1.9 Oscillators

4.1.9.1 Low-Frequency Crystal Oscillator (LFXO)

Table 4.11. Low-Frequency Crystal Oscillator (LFXO)

Parameter	Symbol	Test Condition	Min	Typ	Max	Unit
Crystal frequency	f_{LFXO}		—	32.768	—	kHz
Supported crystal equivalent series resistance (ESR)	ESR_{LFXO}		—	—	70	kΩ
Supported range of crystal load capacitance [1]	C_{LFXO_CL}		6	—	18	pF
On-chip tuning cap range [2]	C_{LFXO_T}	On each of LFXTAL_N and LFXTAL_P pins	8	—	40	pF
On-chip tuning cap step size	SS_{LFXO}		—	0.25	—	pF
Current consumption after startup [3]	I_{LFXO}	ESR = 70 kOhm, C_L = 7 pF, GAIN[4] = 2, AGC[4] = 1	—	273	—	nA
Start- up time	t_{LFXO}	ESR = 70 kOhm, C_L = 7 pF, GAIN[4] = 2	—	308	—	ms

Note:

1. Total load capacitance as seen by the crystal.
2. The effective load capacitance seen by the crystal will be C_{LFXO_T} /2. This is because each XTAL pin has a tuning cap and the two caps will be seen in series by the crystal.
3. Block is supplied by AVDD if ANASW = 0, or DVDD if ANASW=1 in EMU_PWRCTRL register.
4. In CMU_LFXOCTRL register.

4.1.9.2 High-Frequency Crystal Oscillator (HFXO)

Table 4.12. High-Frequency Crystal Oscillator (HFXO)

Parameter	Symbol	Test Condition	Min	Typ	Max	Unit
Crystal frequency	f_{HFXO}	No clock doubling	4	—	48	MHz
Supported crystal equivalent series resistance (ESR)	ESR_{HFXO}	48 MHz crystal	—	—	50	Ω
		24 MHz crystal	—	—	150	Ω
		4 MHz crystal	—	—	180	Ω
Nominal on-chip tuning cap range[1]	C_{HFXO_T}	On each of HFXTAL_N and HFXTAL_P pins	8.7	—	51.7	pF
On-chip tuning capacitance step	SS_{HFXO}		—	0.084	—	pF
Startup time	t_{HFXO}	48 MHz crystal, ESR = 50 Ohm, C_L = 8 pF	—	350	—	µs
		24 MHz crystal, ESR = 150 Ohm, C_L = 6 pF	—	700	—	µs
		4 MHz crystal, ESR = 180 Ohm, C_L = 18 pF	—	3	—	ms
Current consumption after startup	I_{HFXO}	48 MHz crystal	—	480	—	µA
		24 MHz crystal	—	240	—	µA
		4 MHz crystal	—	50	—	µA

Note:

1. The effective load capacitance seen by the crystal will be C_{HFXO_T} /2. This is because each XTAL pin has a tuning cap and the two caps will be seen in series by the crystal.

4.1.9.3 Low-Frequency RC Oscillator (LFRCO)

Table 4.13. Low-Frequency RC Oscillator (LFRCO)

Parameter	Symbol	Test Condition	Min	Typ	Max	Unit
Oscillation frequency	f_{LFRCO}	ENVREF[1] = 1, T ≤ 85 °C	31.3	32.768	33.6	kHz
		ENVREF[1] = 1, T > 85 °C	31	32.768	36.8	kHz
		ENVREF[1] = 0, T ≤ 85 °C	31.3	32.768	33.4	kHz
		ENVREF[1] = 0, T > 85 °C	30	32.768	33.6	kHz
Startup time	t_{LFRCO}		—	500	—	µs
Current consumption [2]	I_{LFRCO}	ENVREF = 1 in CMU_LFRCOCTRL	—	370	—	nA
		ENVREF = 0 in CMU_LFRCOCTRL	—	520	—	nA

Note:
1. In CMU_LFRCOCTRL register.
2. Block is supplied by AVDD if ANASW = 0, or DVDD if ANASW=1 in EMU_PWRCTRL register.

4.1.9.4 High-Frequency RC Oscillator (HFRCO)

Table 4.14. High-Frequency RC Oscillator (HFRCO)

Parameter	Symbol	Test Condition	Min	Typ	Max	Unit
Frequency accuracy	f_{HFRCO_ACC}	At production calibrated frequencies, across supply voltage and temperature	-2.5	—	2.5	%
Start-up time	t_{HFRCO}	$f_{HFRCO} \geq 19$ MHz	—	300	—	ns
		$4 < f_{HFRCO} < 19$ MHz	—	1	—	µs
		$f_{HFRCO} \leq 4$ MHz	—	2.5	—	µs
Maximum DPLL lock time[1]	t_{DPLL_LOCK}	f_{REF} = 32.768 kHz, f_{HFRCO} = 39.98 MHz, N = 1219, M = 0	—	183	—	µs
Current consumption on all supplies	I_{HFRCO}	f_{HFRCO} = 48 MHz	—	258	320	µA
		f_{HFRCO} = 38 MHz	—	218	280	µA
		f_{HFRCO} = 32 MHz	—	182	220	µA
		f_{HFRCO} = 26 MHz	—	156	200	µA
		f_{HFRCO} = 19 MHz	—	130	160	µA
		f_{HFRCO} = 16 MHz	—	112	130	µA
		f_{HFRCO} = 13 MHz	—	101	120	µA
		f_{HFRCO} = 7 MHz	—	80	100	µA
		f_{HFRCO} = 4 MHz	—	29	45	µA
		f_{HFRCO} = 2 MHz	—	26	40	µA
		f_{HFRCO} = 1 MHz	—	24	35	µA
		f_{HFRCO} = 40 MHz, DPLL enabled	—	393	450	µA
		f_{HFRCO} = 32 MHz, DPLL enabled	—	313	350	µA
		f_{HFRCO} = 16 MHz, DPLL enabled	—	180	220	µA
		f_{HFRCO} = 4 MHz, DPLL enabled	—	46	60	µA
		f_{HFRCO} = 1 MHz, DPLL enabled	—	33	45	µA
Coarse trim step size (% of period)	SS_{HFRCO_COARSE}		—	0.8	—	%
Fine trim step size (% of period)	SS_{HFRCO_FINE}		—	0.1	—	%
Period jitter	PJ_{HFRCO}		—	0.2	—	% RMS

Parameter	Symbol	Test Condition	Min	Typ	Max	Unit
Frequency limits	f_{HFRCO_BAND}	FREQRANGE = 0, FINETUNINGEN = 0	2	—	8	MHz
		FREQRANGE = 3, FINETUNINGEN = 0	4	—	14	MHz
		FREQRANGE = 6, FINETUNINGEN = 0	9	—	21	MHz
		FREQRANGE = 7, FINETUNINGEN = 0	10	—	27	MHz
		FREQRANGE = 8, FINETUNINGEN = 0	13	—	33	MHz
		FREQRANGE = 10, FINETUNINGEN = 0	15	—	46	MHz
		FREQRANGE = 11, FINETUNINGEN = 0	23	—	54	MHz
		FREQRANGE = 12, FINETUNINGEN = 0	29	—	64	MHz
		FREQRANGE = 13, FINETUNINGEN = 0	36	—	78	MHz

Note:

1. Maximum DPLL lock time ~= 6 x (M+1) x t_{REF}, where t_{REF} is the reference clock period.

4.1.9.5 Auxiliary High-Frequency RC Oscillator (AUXHFRCO)

Table 4.15. Auxiliary High-Frequency RC Oscillator (AUXHFRCO)

Parameter	Symbol	Test Condition	Min	Typ	Max	Unit
Frequency accuracy	$f_{AUXHFRCO_ACC}$	At production calibrated frequencies, across supply voltage and temperature	-3	—	3	%
Start-up time	$t_{AUXHFRCO}$	$f_{AUXHFRCO} \geq 19$ MHz	—	400	—	ns
		$4 < f_{AUXHFRCO} < 19$ MHz	—	1.4	—	µs
		$f_{AUXHFRCO} \leq 4$ MHz	—	2.5	—	µs
Current consumption on all supplies	$I_{AUXHFRCO}$	$f_{AUXHFRCO} = 48$ MHz	—	238	280	µA
		$f_{AUXHFRCO} = 38$ MHz	—	196	225	µA
		$f_{AUXHFRCO} = 32$ MHz	—	160	190	µA
		$f_{AUXHFRCO} = 26$ MHz	—	137	165	µA
		$f_{AUXHFRCO} = 19$ MHz	—	110	135	µA
		$f_{AUXHFRCO} = 16$ MHz	—	101	125	µA
		$f_{AUXHFRCO} = 13$ MHz	—	78	100	µA
		$f_{AUXHFRCO} = 7$ MHz	—	54	75	µA
		$f_{AUXHFRCO} = 4$ MHz	—	30	45	µA
		$f_{AUXHFRCO} = 2$ MHz	—	27	40	µA
		$f_{AUXHFRCO} = 1$ MHz	—	25	37	µA
Coarse trim step size (% of period)	$SS_{AUXHFRCO_COARSE}$		—	0.8	—	%
Fine trim step size (% of period)	$SS_{AUXHFRCO_FINE}$		—	0.1	—	%
Period jitter	$PJ_{AUXHFRCO}$		—	0.2	—	% RMS

4.1.9.6 Ultra-low Frequency RC Oscillator (ULFRCO)

Table 4.16. Ultra-low Frequency RC Oscillator (ULFRCO)

Parameter	Symbol	Test Condition	Min	Typ	Max	Unit
Oscillation frequency	f_{ULFRCO}		0.88	1	1.12	kHz

4.1.10 Flash Memory Characteristics[1]

Table 4.17. Flash Memory Characteristics[1]

Parameter	Symbol	Test Condition	Min	Typ	Max	Unit
Flash erase cycles before failure	EC_{FLASH}		10000	—	—	cycles
Flash data retention	RET_{FLASH}	T ≤ 85 °C	10	—	—	years
		T ≤ 125 °C	10	—	—	years
Word (32-bit) programming time	t_{W_PROG}	Burst write, 128 words, average time per word	20	26	32	µs
		Single word	59	68	83	µs
Page erase time[2]	t_{PERASE}		20	27	35	ms
Mass erase time[3]	t_{MERASE}		20	27	35	ms
Device erase time[4] [5]	t_{DERASE}	T ≤ 85 °C	—	54	70	ms
		T ≤ 125 °C	—	54	75	ms
Erase current[6]	I_{ERASE}	Page Erase	—	—	1.7	mA
		Mass or Device Erase	—	—	2.0	mA
Write current[6]	I_{WRITE}		—	—	3.5	mA
Supply voltage during flash erase and write	V_{FLASH}		1.62	—	3.6	V

Note:

1. Flash data retention information is published in the Quarterly Quality and Reliability Report.
2. From setting the ERASEPAGE bit in MSC_WRITECMD to 1 until the BUSY bit in MSC_STATUS is cleared to 0. Internal setup and hold times for flash control signals are included.
3. Mass erase is issued by the CPU and erases all flash.
4. Device erase is issued over the AAP interface and erases all flash, SRAM, the Lock Bit (LB) page, and the User data page Lock Word (ULW).
5. From setting the DEVICEERASE bit in AAP_CMD to 1 until the ERASEBUSY bit in AAP_STATUS is cleared to 0. Internal setup and hold times for flash control signals are included.
6. Measured at 25 °C.

4.1.11 General-Purpose I/O (GPIO)

Table 4.18. General-Purpose I/O (GPIO)

Parameter	Symbol	Test Condition	Min	Typ	Max	Unit
Input low voltage	V_{IL}	GPIO pins	—	—	IOVDD*0.3	V
Input high voltage	V_{IH}	GPIO pins	IOVDD*0.7	—	—	V
Output high voltage relative to IOVDD	V_{OH}	Sourcing 3 mA, IOVDD ≥ 3 V, DRIVESTRENGTH[1] = WEAK	IOVDD*0.8	—	—	V
		Sourcing 1.2 mA, IOVDD ≥ 1.62 V, DRIVESTRENGTH[1] = WEAK	IOVDD*0.6	—	—	V
		Sourcing 20 mA, IOVDD ≥ 3 V, DRIVESTRENGTH[1] = STRONG	IOVDD*0.8	—	—	V
		Sourcing 8 mA, IOVDD ≥ 1.62 V, DRIVESTRENGTH[1] = STRONG	IOVDD*0.6	—	—	V
Output low voltage relative to IOVDD	V_{OL}	Sinking 3 mA, IOVDD ≥ 3 V, DRIVESTRENGTH[1] = WEAK	—	—	IOVDD*0.2	V
		Sinking 1.2 mA, IOVDD ≥ 1.62 V, DRIVESTRENGTH[1] = WEAK	—	—	IOVDD*0.4	V
		Sinking 20 mA, IOVDD ≥ 3 V, DRIVESTRENGTH[1] = STRONG	—	—	IOVDD*0.2	V
		Sinking 8 mA, IOVDD ≥ 1.62 V, DRIVESTRENGTH[1] = STRONG	—	—	IOVDD*0.4	V
Input leakage current	I_{IOLEAK}	All GPIO except LFXO pins, GPIO ≤ IOVDD, T ≤ 85 °C	—	0.1	40	nA
		LFXO Pins, GPIO ≤ IOVDD, T ≤ 85 °C	—	0.1	60	nA
		All GPIO except LFXO pins, GPIO ≤ IOVDD, T > 85 °C	—	—	150	nA
		LFXO Pins, GPIO ≤ IOVDD, T > 85 °C	—	—	300	nA
Input leakage current on 5VTOL pads above IOVDD	$I_{5VTOLLEAK}$	IOVDD < GPIO ≤ IOVDD + 2 V	—	3.3	15	µA
I/O pin pull-up/pull-down resistor	R_{PUD}		30	40	65	kΩ
Pulse width of pulses removed by the glitch suppression filter	$t_{IOGLITCH}$		15	25	45	ns

Parameter	Symbol	Test Condition	Min	Typ	Max	Unit
Output fall time, From 70% to 30% of V_{IO}	t_{IOOF}	C_L = 50 pF, DRIVESTRENGTH[1] = STRONG, SLEWRATE[1] = 0x6	—	1.8	—	ns
		C_L = 50 pF, DRIVESTRENGTH[1] = WEAK, SLEWRATE[1] = 0x6	—	4.5	—	ns
Output rise time, From 30% to 70% of V_{IO}	t_{IOOR}	C_L = 50 pF, DRIVESTRENGTH[1] = STRONG, SLEWRATE = 0x6[1]	—	2.2	—	ns
		C_L = 50 pF, DRIVESTRENGTH[1] = WEAK, SLEWRATE[1] = 0x6	—	7.4	—	ns

Note:

1. In GPIO_Pn_CTRL register.

4.1.12 Voltage Monitor (VMON)

Table 4.19. Voltage Monitor (VMON)

Parameter	Symbol	Test Condition	Min	Typ	Max	Unit
Supply current (including I_SENSE)	I_{VMON}	In EM0 or EM1, 1 active channel, T ≤ 85 °C	—	6.3	11	µA
		In EM0 or EM1, All channels active, T ≤ 85 °C	—	12.5	20	µA
		In EM2, EM3 or EM4, 1 channel active and above threshold	—	62	—	nA
		In EM2, EM3 or EM4, 1 channel active and below threshold	—	62	—	nA
		In EM2, EM3 or EM4, All channels active and above threshold	—	99	—	nA
		In EM2, EM3 or EM4, All channels active and below threshold	—	99	—	nA
Loading of monitored supply	I_{SENSE}	In EM0 or EM1	—	2	—	µA
		In EM2, EM3 or EM4	—	2	—	nA
Threshold range	V_{VMON_RANGE}		1.62	—	3.4	V
Threshold step size	N_{VMON_STESP}	Coarse	—	200	—	mV
		Fine	—	20	—	mV
Response time	t_{VMON_RES}	Supply drops at 1V/µs rate	—	460	—	ns
Hysteresis	V_{VMON_HYST}		—	26	—	mV

4.1.13 Analog to Digital Converter (ADC)

Specified at 1 Msps, ADCCLK = 16 MHz, BIASPROG = 0, GPBIASACC = 0, unless otherwise indicated.

Table 4.20. Analog to Digital Converter (ADC)

Parameter	Symbol	Test Condition	Min	Typ	Max	Unit
Resolution	$V_{RESOLUTION}$		6	—	12	Bits
Input voltage range[1]	V_{ADCIN}	Single ended	—	—	V_{FS}	V
		Differential	$-V_{FS}/2$	—	$V_{FS}/2$	V
Input range of external reference voltage, single ended and differential	$V_{ADCREFIN_P}$		1	—	V_{AVDD}	V
Power supply rejection[2]	$PSRR_{ADC}$	At DC	—	80	—	dB
Analog input common mode rejection ratio	$CMRR_{ADC}$	At DC	—	80	—	dB
Current from all supplies, using internal reference buffer. Continuous operation. WARMUPMODE[3] = KEEPADCWARM	$I_{ADC_CONTINUOUS_LP}$	1 Msps / 16 MHz ADCCLK, BIASPROG = 0, GPBIASACC = 1 [4]	—	270	350	µA
		250 ksps / 4 MHz ADCCLK, BIASPROG = 6, GPBIASACC = 1 [4]	—	125	—	µA
		62.5 ksps / 1 MHz ADCCLK, BIASPROG = 15, GPBIASACC = 1 [4]	—	80	—	µA
Current from all supplies, using internal reference buffer. Duty-cycled operation. WARMUPMODE[3] = NORMAL	$I_{ADC_NORMAL_LP}$	35 ksps / 16 MHz ADCCLK, BIASPROG = 0, GPBIASACC = 1 [4]	—	45	—	µA
		5 ksps / 16 MHz ADCCLK BIASPROG = 0, GPBIASACC = 1 [4]	—	8	—	µA
Current from all supplies, using internal reference buffer. Duty-cycled operation. AWARMUPMODE[3] = KEEPINSTANDBY or KEEPINSLOWACC	$I_{ADC_STANDBY_LP}$	125 ksps / 16 MHz ADCCLK, BIASPROG = 0, GPBIASACC = 1 [4]	—	105	—	µA
		35 ksps / 16 MHz ADCCLK, BIASPROG = 0, GPBIASACC = 1 [4]	—	70	—	µA
Current from all supplies, using internal reference buffer. Continuous operation. WARMUPMODE[3] = KEEPADCWARM	$I_{ADC_CONTINUOUS_HP}$	1 Msps / 16 MHz ADCCLK, BIASPROG = 0, GPBIASACC = 0 [4]	—	325	—	µA
		250 ksps / 4 MHz ADCCLK, BIASPROG = 6, GPBIASACC = 0 [4]	—	175	—	µA
		62.5 ksps / 1 MHz ADCCLK, BIASPROG = 15, GPBIASACC = 0 [4]	—	125	—	µA
Current from all supplies, using internal reference buffer. Duty-cycled operation. WARMUPMODE[3] = NORMAL	$I_{ADC_NORMAL_HP}$	35 ksps / 16 MHz ADCCLK, BIASPROG = 0, GPBIASACC = 0 [4]	—	85	—	µA
		5 ksps / 16 MHz ADCCLK BIASPROG = 0, GPBIASACC = 0 [4]	—	16	—	µA
Current from all supplies, using internal reference buffer. Duty-cycled operation. AWARMUPMODE[3] = KEEPINSTANDBY or KEEPINSLOWACC	$I_{ADC_STANDBY_HP}$	125 ksps / 16 MHz ADCCLK, BIASPROG = 0, GPBIASACC = 0 [4]	—	160	—	µA
		35 ksps / 16 MHz ADCCLK, BIASPROG = 0, GPBIASACC = 0 [4]	—	125	—	µA
Current from HFPERCLK	I_{ADC_CLK}	HFPERCLK = 16 MHz	—	166	—	µA

Parameter	Symbol	Test Condition	Min	Typ	Max	Unit
ADC clock frequency	f_{ADCCLK}		—	—	16	MHz
Throughput rate	$f_{ADCRATE}$		—	—	1	Msps
Conversion time[5]	$t_{ADCCONV}$	6 bit	—	7	—	cycles
		8 bit	—	9	—	cycles
		12 bit	—	13	—	cycles
Startup time of reference generator and ADC core	$t_{ADCSTART}$	WARMUPMODE[3] = NORMAL	—	—	5	µs
		WARMUPMODE[3] = KEEPIN-STANDBY	—	—	2	µs
		WARMUPMODE[3] = KEEPINSLO-WACC	—	—	1	µs
SNDR at 1Msps and f_{IN} = 10kHz	$SNDR_{ADC}$	Internal reference[6], differential measurement	58	67	—	dB
		External reference[7], differential measurement	—	68	—	dB
Spurious-free dynamic range (SFDR)	$SFDR_{ADC}$	1 MSamples/s, 10 kHz full-scale sine wave	—	75	—	dB
Differential non-linearity (DNL)	DNL_{ADC}	12 bit resolution, No missing co-des	-1	—	2	LSB
Integral non-linearity (INL), End point method	INL_{ADC}	12 bit resolution	-6	—	6	LSB
Offset error	$V_{ADCOFFSETERR}$		-3	0	3	LSB
Gain error in ADC	$V_{ADCGAIN}$	Using internal reference	—	-0.2	3.5	%
		Using external reference	—	-1	—	%
Temperature sensor slope	V_{TS_SLOPE}		—	-1.84	—	mV/°C

Note:

1. The absolute voltage allowed at any ADC input is dictated by the power rail supplied to on-chip circuitry, and may be lower than the effective full scale voltage. All ADC inputs are limited to the ADC supply (AVDD or DVDD depending on EMU_PWRCTRL_ANASW). Any ADC input routed through the APORT will further be limited by the IOVDD supply to the pin.
2. PSRR is referenced to AVDD when ANASW=0 and to DVDD when ANASW=1 in EMU_PWRCTRL.
3. In ADCn_CNTL register.
4. In ADCn_BIASPROG register.
5. Derived from ADCCLK.
6. Internal reference option used corresponds to selection 2V5 in the SINGLECTRL_REF or SCANCTRL_REF register field. The differential input range with this configuration is ± 1.25 V. Typical value is characterized using full-scale sine wave input. Minimum value is production-tested using sine wave input at 1.5 dB lower than full scale.
7. External reference is 1.25 V applied externally to ADCnEXTREFP, with the selection CONF in the SINGLECTRL_REF or SCANCTRL_REF register field and VREFP in the SINGLECTRLX_VREFSEL or SCANCTRLX_VREFSEL field. The differential input range with this configuration is ± 1.25 V.

4.1.14 Analog Comparator (ACMP)

Table 4.21. Analog Comparator (ACMP)

Parameter	Symbol	Test Condition	Min	Typ	Max	Unit
Input voltage range	V_{ACMPIN}	ACMPVDD = ACMPn_CTRL_PWRSEL [1]	—	—	$V_{ACMPVDD}$	V
Supply voltage	$V_{ACMPVDD}$	BIASPROG[2] ≤ 0x10 or FULLBIAS[2] = 0	1.8	—	$V_{VREGVDD_MAX}$	V
		0x10 < BIASPROG[2] ≤ 0x20 and FULLBIAS[2] = 1	2.1	—	$V_{VREGVDD_MAX}$	V
Active current not including voltage reference[3]	I_{ACMP}	BIASPROG[2] = 1, FULLBIAS[2] = 0	—	50	—	nA
		BIASPROG[2] = 0x10, FULLBIAS[2] = 0	—	306	—	nA
		BIASPROG[2] = 0x02, FULLBIAS[2] = 1	—	6.5	—	µA
		BIASPROG[2] = 0x20, FULLBIAS[2] = 1	—	74	100	µA
Current consumption of internal voltage reference[3]	$I_{ACMPREF}$	VLP selected as input using 2.5 V Reference / 4 (0.625 V)	—	50	—	nA
		VLP selected as input using VDD	—	20	—	nA
		VBDIV selected as input using 1.25 V reference / 1	—	4.1	—	µA
		VADIV selected as input using VDD/1	—	2.4	—	µA

Parameter	Symbol	Test Condition	Min	Typ	Max	Unit
Hysteresis (V_{CM} = 1.25 V, BIASPROG[2] = 0x10, FULL-BIAS[2] = 1)	$V_{ACMPHYST}$	HYSTSEL[4] = HYST0	-3	0	3	mV
		HYSTSEL[4] = HYST1	5	18	27	mV
		HYSTSEL[4] = HYST2	12	33	50	mV
		HYSTSEL[4] = HYST3	17	46	67	mV
		HYSTSEL[4] = HYST4	23	57	92	mV
		HYSTSEL[4] = HYST5	26	68	108	mV
		HYSTSEL[4] = HYST6	30	79	140	mV
		HYSTSEL[4] = HYST7	34	90	160	mV
		HYSTSEL[4] = HYST8	-3	0	3	mV
		HYSTSEL[4] = HYST9	-27	-18	-5	mV
		HYSTSEL[4] = HYST10	-50	-33	-12	mV
		HYSTSEL[4] = HYST11	-67	-45	-17	mV
		HYSTSEL[4] = HYST12	-92	-57	-23	mV
		HYSTSEL[4] = HYST13	-108	-67	-26	mV
		HYSTSEL[4] = HYST14	-140	-78	-30	mV
		HYSTSEL[4] = HYST15	-160	-88	-34	mV
Comparator delay[5]	$t_{ACMPDELAY}$	BIASPROG[2] = 1, FULLBIAS[2] = 0	—	30	—	µs
		BIASPROG[2] = 0x10, FULLBIAS[2] = 0	—	3.7	—	µs
		BIASPROG[2] = 0x02, FULLBIAS[2] = 1	—	360	—	ns
		BIASPROG[2] = 0x20, FULLBIAS[2] = 1	—	35	—	ns
Offset voltage	$V_{ACMPOFFSET}$	BIASPROG[2] =0x10, FULLBIAS[2] = 1	-35	—	35	mV
Reference voltage	$V_{ACMPREF}$	Internal 1.25 V reference	1	1.25	1.47	V
		Internal 2.5 V reference	1.98	2.5	2.8	V
Capacitive sense internal re-sistance	R_{CSRES}	CSRESSEL[6] = 0	—	infinite	—	kΩ
		CSRESSEL[6] = 1	—	15	—	kΩ
		CSRESSEL[6] = 2	—	27	—	kΩ
		CSRESSEL[6] = 3	—	39	—	kΩ
		CSRESSEL[6] = 4	—	51	—	kΩ
		CSRESSEL[6] = 5	—	100	—	kΩ
		CSRESSEL[6] = 6	—	162	—	kΩ
		CSRESSEL[6] = 7	—	235	—	kΩ

Parameter	Symbol	Test Condition	Min	Typ	Max	Unit

Note:

1. ACMPVDD is a supply chosen by the setting in ACMPn_CTRL_PWRSEL and may be IOVDD, AVDD or DVDD.
2. In ACMPn_CTRL register.
3. The total ACMP current is the sum of the contributions from the ACMP and its internal voltage reference. $I_{ACMPTOTAL} = I_{ACMP} + I_{ACMPREF}$.
4. In ACMPn_HYSTERESIS registers.
5. ± 100 mV differential drive.
6. In ACMPn_INPUTSEL register.

4.1.15 Digital to Analog Converter (VDAC)

DRIVESTRENGTH = 2 unless otherwise specified. Primary VDAC output.

Table 4.22. Digital to Analog Converter (VDAC)

Parameter	Symbol	Test Condition	Min	Typ	Max	Unit
Output voltage	V_{DACOUT}	Single-Ended	0	—	V_{VREF}	V
		Differential[1]	$-V_{VREF}$	—	V_{VREF}	V
Current consumption including references (2 channels)[2]	I_{DAC}	500 ksps, 12-bit, DRIVESTRENGTH = 2, REFSEL = 4	—	396	—	µA
		44.1 ksps, 12-bit, DRIVESTRENGTH = 1, REFSEL = 4	—	72	—	µA
		200 Hz refresh rate, 12-bit Sample-Off mode in EM2, DRIVESTRENGTH = 2, REFSEL = 4, SETTLETIME = 0x02, WARMUPTIME = 0x0A	—	2	—	µA
Current from HFPERCLK[3]	I_{DAC_CLK}		—	5.8	—	µA/MHz
Sample rate	SR_{DAC}		—	—	500	ksps
DAC clock frequency	f_{DAC}		—	—	1	MHz
Conversion time	$t_{DACCONV}$	f_{DAC} = 1MHz	2	—	—	µs
Settling time	$t_{DACSETTLE}$	50% fs step settling to 5 LSB	—	2.5	—	µs
Startup time	$t_{DACSTARTUP}$	Enable to 90% fs output, settling to 10 LSB	—	—	12	µs
Output impedance	R_{OUT}	DRIVESTRENGTH = 2, 0.4 V ≤ V_{OUT} ≤ V_{OPA} - 0.4 V, -8 mA < I_{OUT} < 8 mA, Full supply range	—	2	—	Ω
		DRIVESTRENGTH = 0 or 1, 0.4 V ≤ V_{OUT} ≤ V_{OPA} - 0.4 V, -400 µA < I_{OUT} < 400 µA, Full supply range	—	2	—	Ω
		DRIVESTRENGTH = 2, 0.1 V ≤ V_{OUT} ≤ V_{OPA} - 0.1 V, -2 mA < I_{OUT} < 2 mA, Full supply range	—	2	—	Ω
		DRIVESTRENGTH = 0 or 1, 0.1 V ≤ V_{OUT} ≤ V_{OPA} - 0.1 V, -100 µA < I_{OUT} < 100 µA, Full supply range	—	2	—	Ω
Power supply rejection ratio[4]	PSRR	Vout = 50% fs. DC	—	65.5	—	dB

Parameter	Symbol	Test Condition	Min	Typ	Max	Unit
Signal to noise and distortion ratio (1 kHz sine wave), Noise band limited to 250 kHz	$SNDR_{DAC}$	500 ksps, single-ended, internal 1.25V reference	—	60.4	—	dB
		500 ksps, single-ended, internal 2.5V reference	—	61.6	—	dB
		500 ksps, single-ended, 3.3V VDD reference	—	64.0	—	dB
		500 ksps, differential, internal 1.25V reference	—	63.3	—	dB
		500 ksps, differential, internal 2.5V reference	—	64.4	—	dB
		500 ksps, differential, 3.3V VDD reference	—	65.8	—	dB
Signal to noise and distortion ratio (1 kHz sine wave), Noise band limited to 22 kHz	$SNDR_{DAC_BAND}$	500 ksps, single-ended, internal 1.25V reference	—	65.3	—	dB
		500 ksps, single-ended, internal 2.5V reference	—	66.7	—	dB
		500 ksps, single-ended, 3.3V VDD reference	—	70.0	—	dB
		500 ksps, differential, internal 1.25V reference	—	67.8	—	dB
		500 ksps, differential, internal 2.5V reference	—	69.0	—	dB
		500 ksps, differential, 3.3V VDD reference	—	68.5	—	dB
Total harmonic distortion	THD		—	70.2	—	dB
Differential non-linearity[5]	DNL_{DAC}		-1.5	—	1.5	LSB
Intergral non-linearity	INL_{DAC}		-4	—	4	LSB
Offset error[6]	V_{OFFSET}	T = 25 °C	-8	—	8	mV
		Across operating temperature range	-25	—	25	mV
Gain error[6]	V_{GAIN}	T = 25 °C, Low-noise internal reference (REFSEL = 1V25LN or 2V5LN)	-2.5	—	2.5	%
		Across operating temperature range, Low-noise internal reference (REFSEL = 1V25LN or 2V5LN)	-3.5	—	3.5	%
External load capactiance, OUTSCALE=0	C_{LOAD}		—	—	75	pF

Parameter	Symbol	Test Condition	Min	Typ	Max	Unit

Note:

1. In differential mode, the output is defined as the difference between two single-ended outputs. Absolute voltage on each output is limited to the single-ended range.
2. Supply current specifications are for VDAC circuitry operating with static output only and do not include current required to drive the load.
3. Current from HFPERCLK is dependent on HFPERCLK frequency. This current contributes to the total supply current used when the clock to the DAC peripheral is enabled in the CMU.
4. PSRR calculated as 20 * $\log_{10}(\Delta VDD / \Delta V_{OUT})$, VDAC output at 90% of full scale
5. Entire range is monotonic and has no missing codes.
6. Gain is calculated by measuring the slope from 10% to 90% of full scale. Offset is calculated by comparing actual VDAC output at 10% of full scale to ideal VDAC output at 10% of full scale with the measured gain.

4.1.16 Capacitive Sense (CSEN)

Table 4.23. Capacitive Sense (CSEN)

Parameter	Symbol	Test Condition	Min	Typ	Max	Unit
Single conversion time (1x accumulation)	t_{CNV}	12-bit SAR Conversions	—	20.2	—	µs
		16-bit SAR Conversions	—	26.4	—	µs
		Delta Modulation Conversion (single comparison)	—	1.55	—	µs
Maximum external capacitive load	C_{EXTMAX}	IREFPROG=7 (Gain = 1x), including routing parasitics	—	68	—	pF
		IREFPROG=0 (Gain = 10x), including routing parasitics	—	680	—	pF
Maximum external series impedance	R_{EXTMAX}		—	1	—	kΩ
Supply current, EM2 bonded conversions, WARMUPMODE=NORMAL, WARMUPCNT=0	I_{CSEN_BOND}	12-bit SAR conversions, 20 ms conversion rate, IREFPROG=7 (Gain = 1x), 10 channels bonded (total capacitance of 330 pF)[1]	—	326	—	nA
		Delta Modulation conversions, 20 ms conversion rate, IREFPROG=7 (Gain = 1x), 10 channels bonded (total capacitance of 330 pF)[1]	—	226	—	nA
		12-bit SAR conversions, 200 ms conversion rate, IREFPROG=7 (Gain = 1x), 10 channels bonded (total capacitance of 330 pF)[1]	—	33	—	nA
		Delta Modulation conversions, 200 ms conversion rate, IREFPROG=7 (Gain = 1x), 10 channels bonded (total capacitance of 330 pF)[1]	—	25	—	nA
Supply current, EM2 scan conversions, WARMUPMODE=NORMAL, WARMUPCNT=0	I_{CSEN_EM2}	12-bit SAR conversions, 20 ms scan rate, IREFPROG=0 (Gain = 10x), 8 samples per scan[1]	—	690	—	nA
		Delta Modulation conversions, 20 ms scan rate, 8 comparisons per sample (DMCR = 1, DMR = 2), IREFPROG=0 (Gain = 10x), 8 samples per scan[1]	—	515	—	nA
		12-bit SAR conversions, 200 ms scan rate, IREFPROG=0 (Gain = 10x), 8 samples per scan[1]	—	79	—	nA
		Delta Modulation conversions, 200 ms scan rate, 8 comparisons per sample (DMCR = 1, DMR = 2), IREFPROG=0 (Gain = 10x), 8 samples per scan[1]	—	57	—	nA

Parameter	Symbol	Test Condition	Min	Typ	Max	Unit
Supply current, continuous conversions, WARMUP-MODE=KEEPCSENWARM	I_{CSEN_ACTIVE}	SAR or Delta Modulation conversions of 33 pF capacitor, IREFPROG=0 (Gain = 10x), always on	—	90.5	—	µA
HFPERCLK supply current	$I_{CSEN_HFPERCLK}$	Current contribution from HFPERCLK when clock to CSEN block is enabled.	—	2.25	—	µA/MHz

Note:

1. Current is specified with a total external capacitance of 33 pF per channel. Average current is dependent on how long the peripheral is actively sampling channels within the scan period, and scales with the number of samples acquired. Supply current for a specific application can be estimated by multiplying the current per sample by the total number of samples per period (total_current = single_sample_current * (number_of_channels * accumulation)).

4.1.17 Operational Amplifier (OPAMP)

Unless otherwise indicated, specified conditions are: Non-inverting input configuration, VDD = 3.3 V, DRIVESTRENGTH = 2, MAIN-OUTEN = 1, C_{LOAD} = 75 pF with OUTSCALE = 0, or C_{LOAD} = 37.5 pF with OUTSCALE = 1. Unit gain buffer and 3X-gain connection as specified in table footnotes[1] [2].

Table 4.24. Operational Amplifier (OPAMP)

Parameter	Symbol	Test Condition	Min	Typ	Max	Unit
Supply voltage (from AVDD)	V_{OPA}	HCMDIS = 0, Rail-to-rail input range	2	—	3.8	V
		HCMDIS = 1	1.62	—	3.8	V
Input voltage	V_{IN}	HCMDIS = 0, Rail-to-rail input range	V_{VSS}	—	V_{OPA}	V
		HCMDIS = 1	V_{VSS}	—	V_{OPA}-1.2	V
Input impedance	R_{IN}		100	—	—	MΩ
Output voltage	V_{OUT}		V_{VSS}	—	V_{OPA}	V
Load capacitance[3]	C_{LOAD}	OUTSCALE = 0	—	—	75	pF
		OUTSCALE = 1	—	—	37.5	pF
Output impedance	R_{OUT}	DRIVESTRENGTH = 2 or 3, 0.4 V ≤ V_{OUT} ≤ V_{OPA} - 0.4 V, -8 mA < I_{OUT} < 8 mA, Buffer connection, Full supply range	—	0.25	—	Ω
		DRIVESTRENGTH = 0 or 1, 0.4 V ≤ V_{OUT} ≤ V_{OPA} - 0.4 V, -400 µA < I_{OUT} < 400 µA, Buffer connection, Full supply range	—	0.6	—	Ω
		DRIVESTRENGTH = 2 or 3, 0.1 V ≤ V_{OUT} ≤ V_{OPA} - 0.1 V, -2 mA < I_{OUT} < 2 mA, Buffer connection, Full supply range	—	0.4	—	Ω
		DRIVESTRENGTH = 0 or 1, 0.1 V ≤ V_{OUT} ≤ V_{OPA} - 0.1 V, -100 µA < I_{OUT} < 100 µA, Buffer connection, Full supply range	—	1	—	Ω
Internal closed-loop gain	G_{CL}	Buffer connection	0.99	1	1.01	-
		3x Gain connection	2.93	2.99	3.05	-
		16x Gain connection	15.07	15.7	16.33	-
Active current[4]	I_{OPA}	DRIVESTRENGTH = 3, OUT-SCALE = 0	—	580	—	µA
		DRIVESTRENGTH = 2, OUT-SCALE = 0	—	176	—	µA
		DRIVESTRENGTH = 1, OUT-SCALE = 0	—	13	—	µA
		DRIVESTRENGTH = 0, OUT-SCALE = 0	—	4.7	—	µA

Parameter	Symbol	Test Condition	Min	Typ	Max	Unit
Open-loop gain	G_{OL}	DRIVESTRENGTH = 3	—	135	—	dB
		DRIVESTRENGTH = 2	—	137	—	dB
		DRIVESTRENGTH = 1	—	121	—	dB
		DRIVESTRENGTH = 0	—	109	—	dB
Loop unit-gain frequency[5]	UGF	DRIVESTRENGTH = 3, Buffer connection	—	3.38	—	MHz
		DRIVESTRENGTH = 2, Buffer connection	—	0.9	—	MHz
		DRIVESTRENGTH = 1, Buffer connection	—	132	—	kHz
		DRIVESTRENGTH = 0, Buffer connection	—	34	—	kHz
		DRIVESTRENGTH = 3, 3x Gain connection	—	2.57	—	MHz
		DRIVESTRENGTH = 2, 3x Gain connection	—	0.71	—	MHz
		DRIVESTRENGTH = 1, 3x Gain connection	—	113	—	kHz
		DRIVESTRENGTH = 0, 3x Gain connection	—	28	—	kHz
Phase margin	PM	DRIVESTRENGTH = 3, Buffer connection	—	67	—	°
		DRIVESTRENGTH = 2, Buffer connection	—	69	—	°
		DRIVESTRENGTH = 1, Buffer connection	—	63	—	°
		DRIVESTRENGTH = 0, Buffer connection	—	68	—	°
Output voltage noise	N_{OUT}	DRIVESTRENGTH = 3, Buffer connection, 10 Hz - 10 MHz	—	146	—	µVrms
		DRIVESTRENGTH = 2, Buffer connection, 10 Hz - 10 MHz	—	163	—	µVrms
		DRIVESTRENGTH = 1, Buffer connection, 10 Hz - 1 MHz	—	170	—	µVrms
		DRIVESTRENGTH = 0, Buffer connection, 10 Hz - 1 MHz	—	176	—	µVrms
		DRIVESTRENGTH = 3, 3x Gain connection, 10 Hz - 10 MHz	—	313	—	µVrms
		DRIVESTRENGTH = 2, 3x Gain connection, 10 Hz - 10 MHz	—	271	—	µVrms
		DRIVESTRENGTH = 1, 3x Gain connection, 10 Hz - 1 MHz	—	247	—	µVrms
		DRIVESTRENGTH = 0, 3x Gain connection, 10 Hz - 1 MHz	—	245	—	µVrms

Parameter	Symbol	Test Condition	Min	Typ	Max	Unit
Slew rate[6]	SR	DRIVESTRENGTH = 3, INCBW=1[7]	—	4.7	—	V/µs
		DRIVESTRENGTH = 3, INCBW=0	—	1.5	—	V/µs
		DRIVESTRENGTH = 2, INCBW=1[7]	—	1.27	—	V/µs
		DRIVESTRENGTH = 2, INCBW=0	—	0.42	—	V/µs
		DRIVESTRENGTH = 1, INCBW=1[7]	—	0.17	—	V/µs
		DRIVESTRENGTH = 1, INCBW=0	—	0.058	—	V/µs
		DRIVESTRENGTH = 0, INCBW=1[7]	—	0.044	—	V/µs
		DRIVESTRENGTH = 0, INCBW=0	—	0.015	—	V/µs
Startup time[8]	T_{START}	DRIVESTRENGTH = 2	—	—	12	µs
Input offset voltage	V_{OSI}	DRIVESTRENGTH = 2 or 3, T = 25 °C	-3	—	3	mV
		DRIVESTRENGTH = 1 or 0, T = 25 °C	-3	—	3	mV
		DRIVESTRENGTH = 2 or 3, across operating temperature range	-12	—	12	mV
		DRIVESTRENGTH = 1 or 0, across operating temperature range	-30	—	30	mV
DC power supply rejection ratio[9]	$PSRR_{DC}$	Input referred	—	70	—	dB
DC common-mode rejection ratio[9]	$CMRR_{DC}$	Input referred	—	70	—	dB
Total harmonic distortion	THD_{OPA}	DRIVESTRENGTH = 2, 3x Gain connection, 1 kHz, V_{OUT} = 0.1 V to V_{OPA} - 0.1 V	—	90	—	dB
		DRIVESTRENGTH = 0, 3x Gain connection, 0.1 kHz, V_{OUT} = 0.1 V to V_{OPA} - 0.1 V	—	90	—	dB

Parameter	Symbol	Test Condition	Min	Typ	Max	Unit

Note:

1. Specified configuration for Unit gain buffer configuration is: INCBW = 0, HCMDIS = 0, RESINSEL = DISABLE. V_{INPUT} = 0.5 V, V_{OUTPUT} = 0.5 V.
2. Specified configuration for 3X-Gain configuration is: INCBW = 1, HCMDIS = 1, RESINSEL = VSS, V_{INPUT} = 0.5 V, V_{OUTPUT} = 1.5 V. Nominal voltage gain is 3.
3. If the maximum C_{LOAD} is exceeded, an isolation resistor is required for stability. See AN0038 for more information.
4. Current into the load resistor is excluded. When the OPAMP is connected with closed-loop gain > 1, there will be extra current to drive the resistor feedback network. The internal resistor feedback network has total resistance of 143.5 kOhm, which will cause another ~10 µA current when the OPAMP drives 1.5 V between output and ground.
5. In unit gain connection, UGF is the gain-bandwidth product of the OPAMP. In 3x Gain connection, UGF is the gain-bandwidth product of the OPAMP and 1/3 attenuation of the feedback network.
6. Step between 0.2V and V_{OPA}-0.2V, 10%-90% rising/falling range.
7. When INCBW is set to 1 the OPAMP bandwidth is increased. This is allowed only when the non-inverting close-loop gain is ≥ 3, or the OPAMP may not be stable.
8. From enable to output settled. In sample-and-off mode, RC network after OPAMP will contribute extra delay. Settling error < 1mV.
9. When HCMDIS=1 and input common mode transitions the region from V_{OPA}-1.4V to V_{OPA}-1V, input offset will change. PSRR and CMRR specifications do not apply to this transition region.

4.1.18 LCD Driver

Table 4.25. LCD Driver

Parameter	Symbol	Test Condition	Min	Typ	Max	Unit
Frame rate	f_{LCDFR}		30	—	100	Hz
LCD supply range[1]	V_{LCDIN}		1.8	—	3.8	V
LCD output voltage range	V_{LCD}	Current source mode, No external LCD capacitor	2.0	—	V_{LCDIN}-0.4	V
		Step-down mode with external LCD capacitor	2.0	—	V_{LCDIN}	V
		Charge pump mode with external LCD capacitor	2.0	—	Min of 3.8 and 1.9 * V_{LCDIN}	V
Contrast control step size	$STEP_{CONTRAST}$	Current source mode	—	64	—	mV
		Charge pump or Step-down mode	—	43	—	mV
Contrast control step accuracy[2]	$ACC_{CONTRAST}$		—	+/-4	—	%

Note:

1. V_{LCDIN} is selectable between the AVDD or DVDD supply pins, depending on EMU_PWRCTRL_ANASW.
2. Step size accuracy is measured relative to the typical step size, and typ value represents one standard deviation.

4.1.19 Pulse Counter (PCNT)

Table 4.26. Pulse Counter (PCNT)

Parameter	Symbol	Test Condition	Min	Typ	Max	Unit
Input frequency	F_{IN}	Asynchronous Single and Quadrature Modes	—	—	20	MHz
		Sampled Modes with Debounce filter set to 0.	—	—	8	kHz

4.1.20 Analog Port (APORT)

Table 4.27. Analog Port (APORT)

Parameter	Symbol	Test Condition	Min	Typ	Max	Unit
Supply current[1] [2]	I_{APORT}	Operation in EM0/EM1	—	7	—	µA
		Operation in EM2/EM3	—	65	—	nA

Note:

1. Supply current increase that occurs when an analog peripheral requests access to APORT. This current is not included in reported peripheral currents. Additional peripherals requesting access to APORT do not incur further current.
2. Specified current is for continuous APORT operation. In applications where the APORT is not requested continuously (e.g. periodic ACMP requests from LESENSE in EM2), the average current requirements can be estimated by mutiplying the duty cycle of the requests by the specified continuous current number.

4.1.21 I2C

4.1.21.1 I2C Standard-mode (Sm)[1]

Table 4.28. I2C Standard-mode (Sm)[1]

Parameter	Symbol	Test Condition	Min	Typ	Max	Unit
SCL clock frequency[2]	f_{SCL}		0	—	100	kHz
SCL clock low time	t_{LOW}		4.7	—	—	µs
SCL clock high time	t_{HIGH}		4	—	—	µs
SDA set-up time	t_{SU_DAT}		250	—	—	ns
SDA hold time[3]	t_{HD_DAT}		100	—	3450	ns
Repeated START condition set-up time	t_{SU_STA}		4.7	—	—	µs
(Repeated) START condition hold time	t_{HD_STA}		4	—	—	µs
STOP condition set-up time	t_{SU_STO}		4	—	—	µs
Bus free time between a STOP and START condition	t_{BUF}		4.7	—	—	µs

Note:

1. For CLHR set to 0 in the I2Cn_CTRL register.
2. For the minimum HFPERCLK frequency required in Standard-mode, refer to the I2C chapter in the reference manual.
3. The maximum SDA hold time (t_{HD_DAT}) needs to be met only when the device does not stretch the low time of SCL (t_{LOW}).

4.1.21.2 I2C Fast-mode (Fm)[1]

Table 4.29. I2C Fast-mode (Fm)[1]

Parameter	Symbol	Test Condition	Min	Typ	Max	Unit
SCL clock frequency[2]	f_{SCL}		0	—	400	kHz
SCL clock low time	t_{LOW}		1.3	—	—	µs
SCL clock high time	t_{HIGH}		0.6	—	—	µs
SDA set-up time	t_{SU_DAT}		100	—	—	ns
SDA hold time[3]	t_{HD_DAT}		100	—	900	ns
Repeated START condition set-up time	t_{SU_STA}		0.6	—	—	µs
(Repeated) START condition hold time	t_{HD_STA}		0.6	—	—	µs
STOP condition set-up time	t_{SU_STO}		0.6	—	—	µs
Bus free time between a STOP and START condition	t_{BUF}		1.3	—	—	µs

Note:

1. For CLHR set to 1 in the I2Cn_CTRL register.
2. For the minimum HFPERCLK frequency required in Fast-mode, refer to the I2C chapter in the reference manual.
3. The maximum SDA hold time ($t_{HD,DAT}$) needs to be met only when the device does not stretch the low time of SCL (t_{LOW}).

4.1.21.3 I2C Fast-mode Plus (Fm+)[1]

Table 4.30. I2C Fast-mode Plus (Fm+)[1]

Parameter	Symbol	Test Condition	Min	Typ	Max	Unit
SCL clock frequency[2]	f_{SCL}		0	—	1000	kHz
SCL clock low time	t_{LOW}		0.5	—	—	µs
SCL clock high time	t_{HIGH}		0.26	—	—	µs
SDA set-up time	t_{SU_DAT}		50	—	—	ns
SDA hold time	t_{HD_DAT}		100	—	—	ns
Repeated START condition set-up time	t_{SU_STA}		0.26	—	—	µs
(Repeated) START condition hold time	t_{HD_STA}		0.26	—	—	µs
STOP condition set-up time	t_{SU_STO}		0.26	—	—	µs
Bus free time between a STOP and START condition	t_{BUF}		0.5	—	—	µs

Note:

1. For CLHR set to 0 or 1 in the I2Cn_CTRL register.
2. For the minimum HFPERCLK frequency required in Fast-mode Plus, refer to the I2C chapter in the reference manual.

4.1.22 USART SPI

SPI Master Timing

Table 4.31. SPI Master Timing

Parameter	Symbol	Test Condition	Min	Typ	Max	Unit
SCLK period [1 2 3]	t_{SCLK}		2 * $t_{HFPERCLK}$	—	—	ns
CS to MOSI [1 2]	t_{CS_MO}		-19.8	—	18.9	ns
SCLK to MOSI [1 2]	t_{SCLK_MO}		-10	—	14.5	ns
MISO setup time [1 2]	t_{SU_MI}	IOVDD = 1.62 V	75	—	—	ns
		IOVDD = 3.0 V	40	—	—	ns
MISO hold time [1 2]	t_{H_MI}		-10	—	—	ns

Note:
1. Applies for both CLKPHA = 0 and CLKPHA = 1 (figure only shows CLKPHA = 0).
2. Measurement done with 8 pF output loading at 10% and 90% of V_{DD} (figure shows 50% of V_{DD}).
3. $t_{HFPERCLK}$ is one period of the selected HFPERCLK.

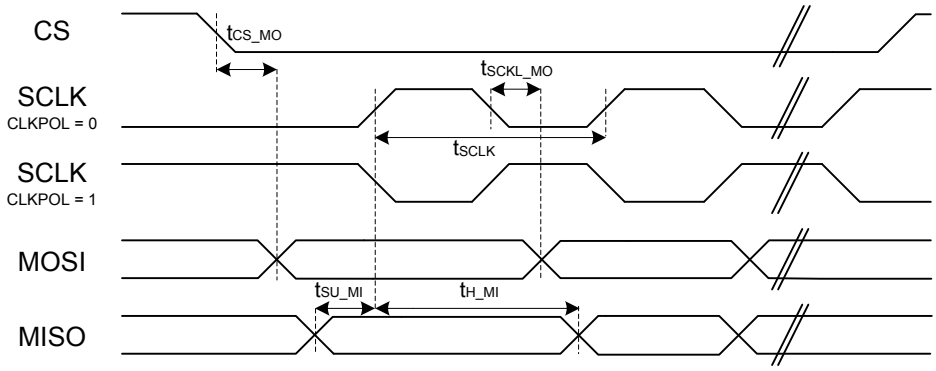

Figure 4.1. SPI Master Timing Diagram

SPI Slave Timing

Table 4.32. SPI Slave Timing

Parameter	Symbol	Test Condition	Min	Typ	Max	Unit
SCLK period [1 2 3]	t_{SCLK}		6 * $t_{HFPERCLK}$	—	—	ns
SCLK high time[1 2 3]	t_{SCLK_HI}		2.5 * $t_{HFPERCLK}$	—	—	ns
SCLK low time[1 2 3]	t_{SCLK_LO}		2.5 * $t_{HFPERCLK}$	—	—	ns
CS active to MISO [1 2]	$t_{CS_ACT_MI}$		20	—	70	ns
CS disable to MISO [1 2]	$t_{CS_DIS_MI}$		15	—	150	ns
MOSI setup time [1 2]	t_{SU_MO}		4	—	—	ns
MOSI hold time [1 2 3]	t_{H_MO}		7	—	—	ns
SCLK to MISO [1 2 3]	t_{SCLK_MI}		14 + 1.5 * $t_{HFPERCLK}$	—	40 + 2.5 * $t_{HFPERCLK}$	ns

Note:
1. Applies for both CLKPHA = 0 and CLKPHA = 1 (figure only shows CLKPHA = 0).
2. Measurement done with 8 pF output loading at 10% and 90% of V_{DD} (figure shows 50% of V_{DD}).
3. $t_{HFPERCLK}$ is one period of the selected HFPERCLK.

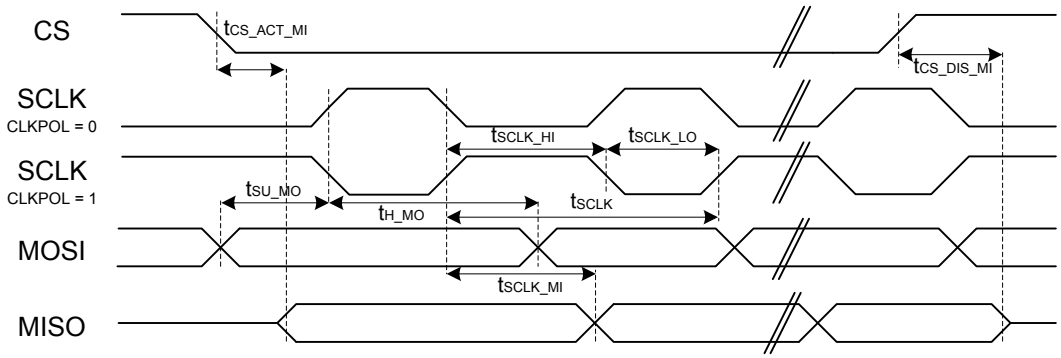

Figure 4.2. SPI Slave Timing Diagram

4.2 Typical Performance Curves

Typical performance curves indicate typical characterized performance under the stated conditions.

4.2.1 Supply Current

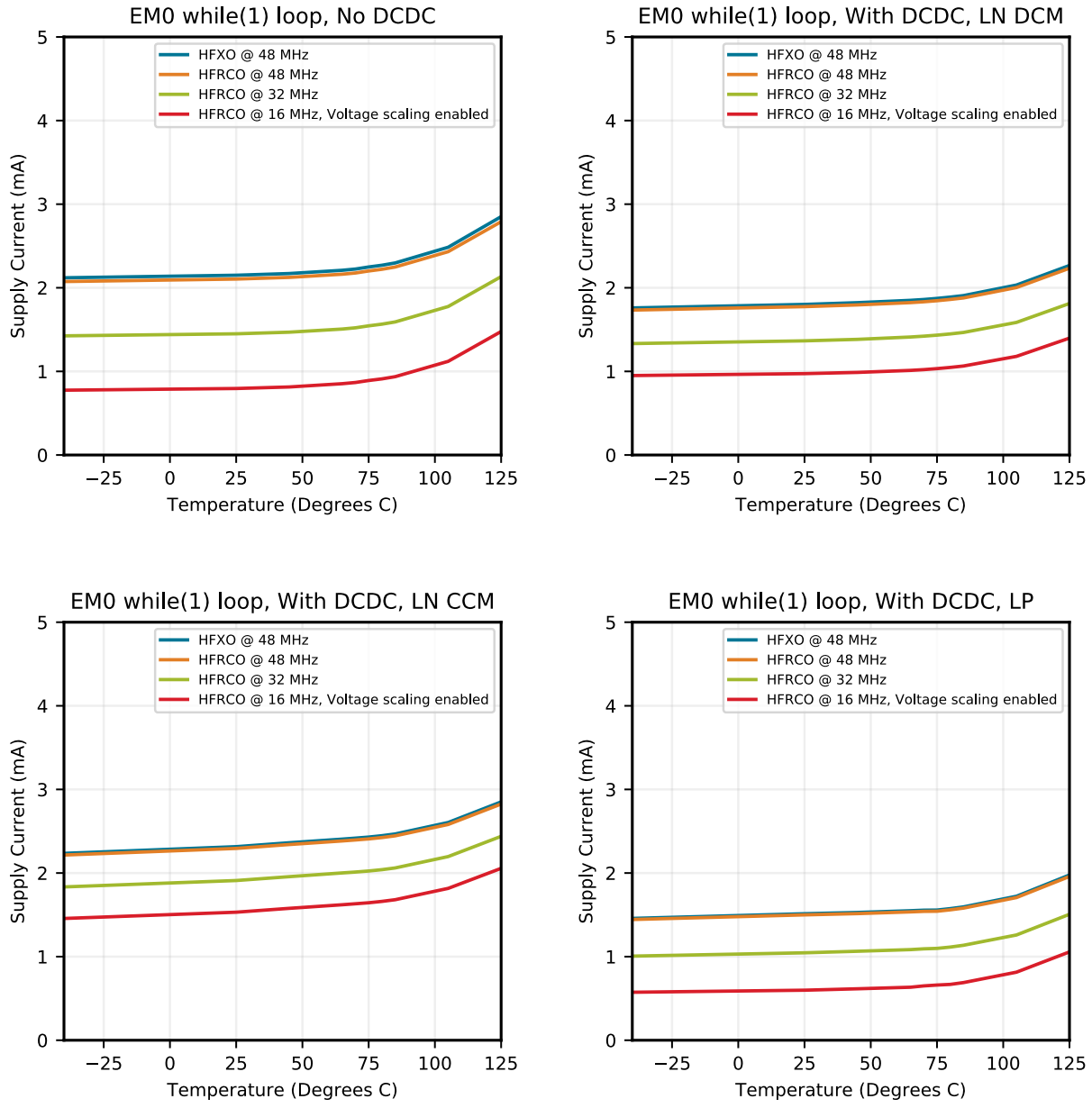

Figure 4.3. EM0 Active Mode Typical Supply Current vs. Temperature

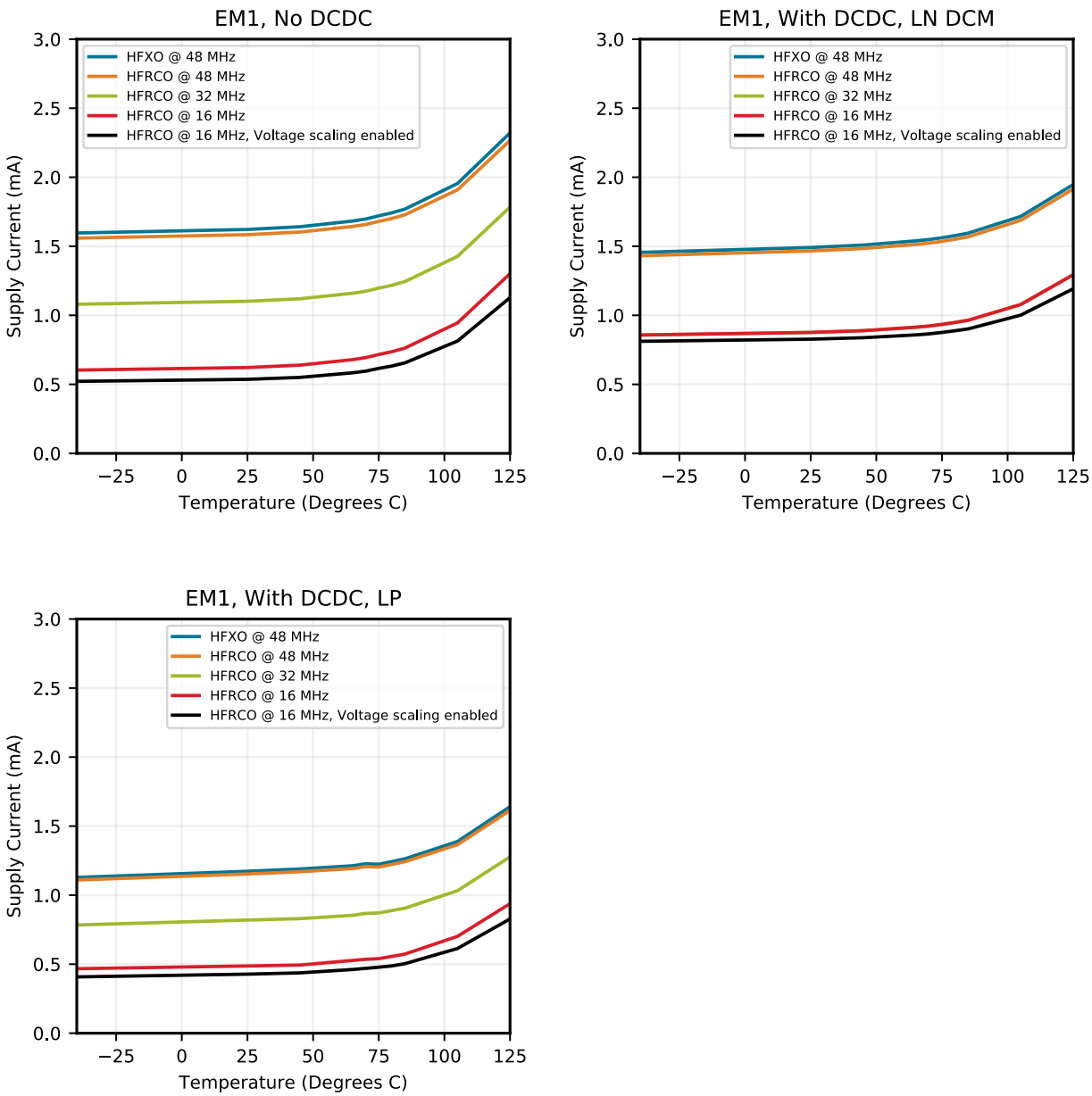

Figure 4.4. EM1 Sleep Mode Typical Supply Current vs. Temperature

Typical supply current for EM2, EM3 and EM4H using standard software libraries from Silicon Laboratories.

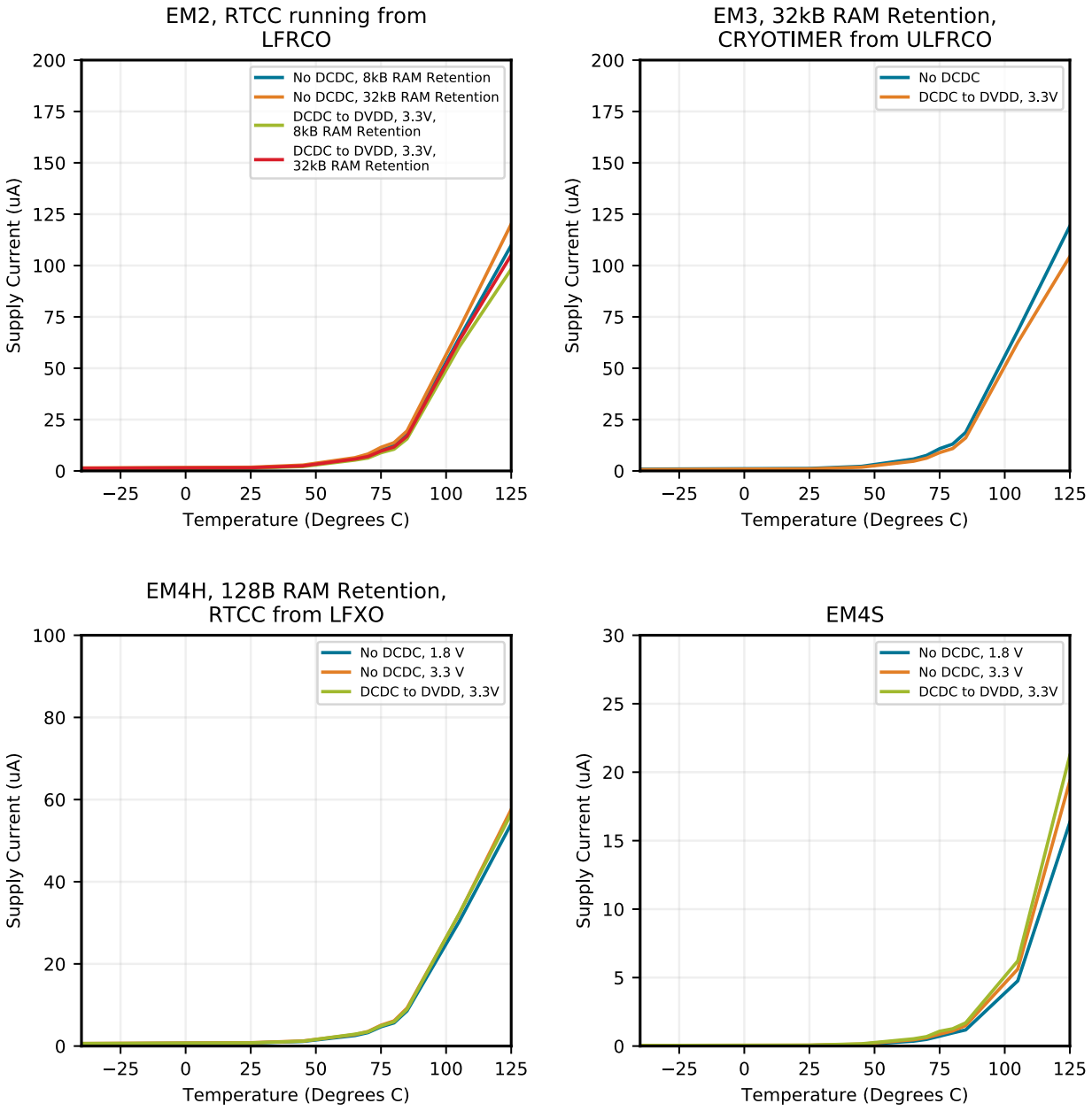

Figure 4.5. EM2, EM3, EM4H and EM4S Typical Supply Current vs. Temperature

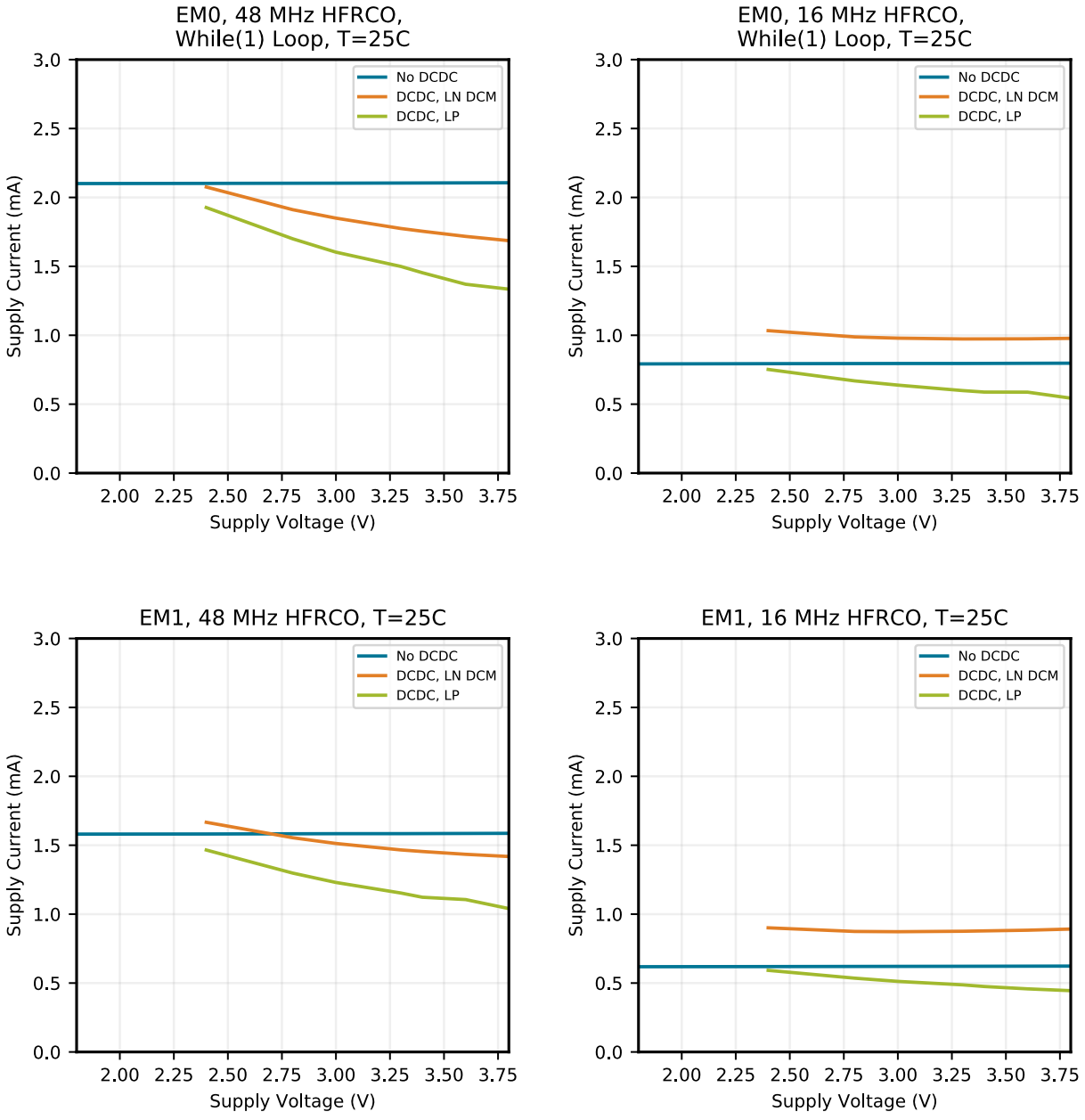

Figure 4.6. EM0 and EM1 Mode Typical Supply Current vs. Supply

Typical supply current for EM2, EM3 and EM4H using standard software libraries from Silicon Laboratories.

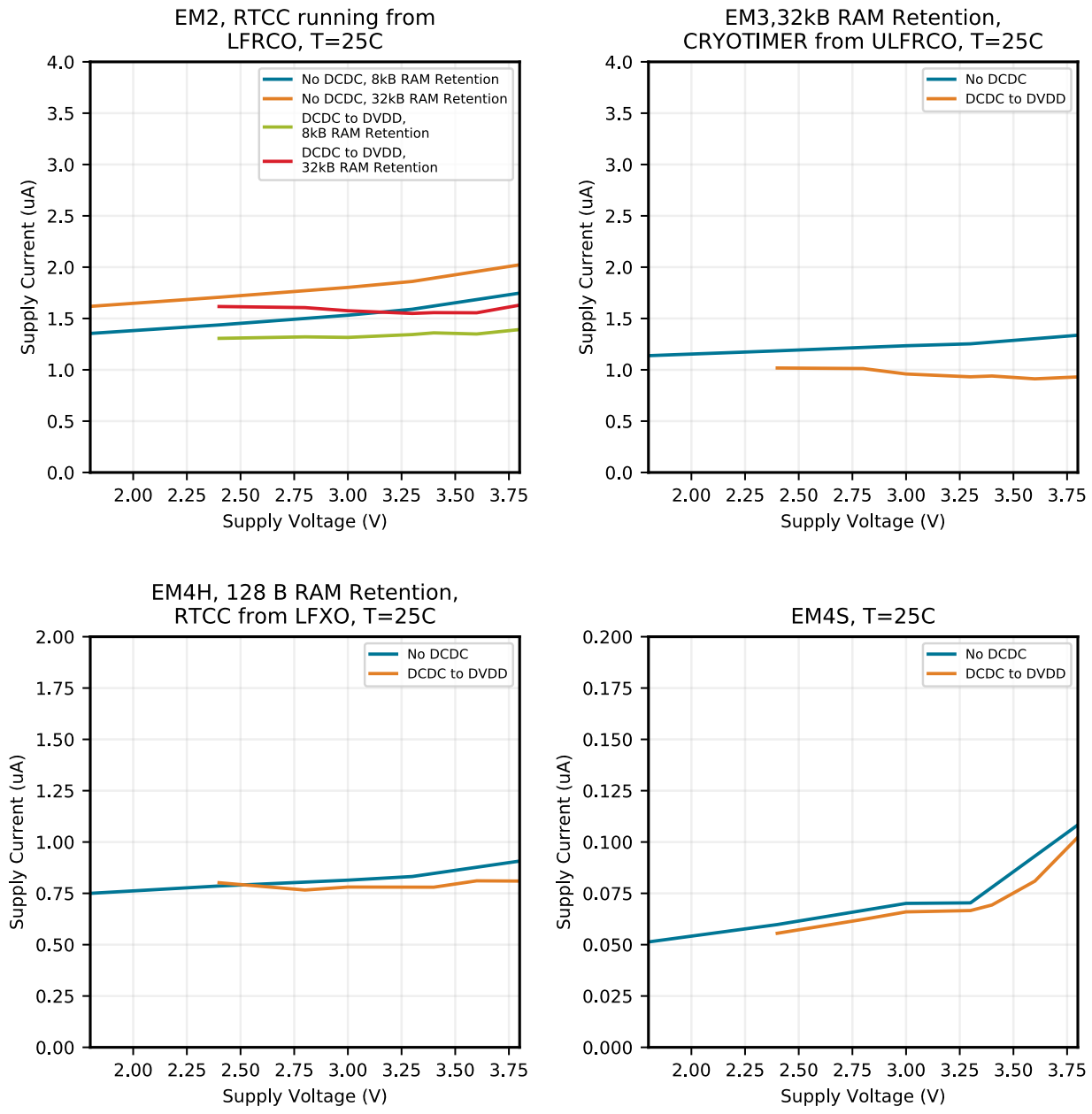

Figure 4.7. EM2, EM3, EM4H and EM4S Typical Supply Current vs. Supply

4.2.2 DC-DC Converter

Default test conditions: CCM mode, LDCDC = 4.7 µH, CDCDC = 4.7 µF, VDCDC_I = 3.3 V, VDCDC_O = 1.8 V, FDCDC_LN = 7 MHz

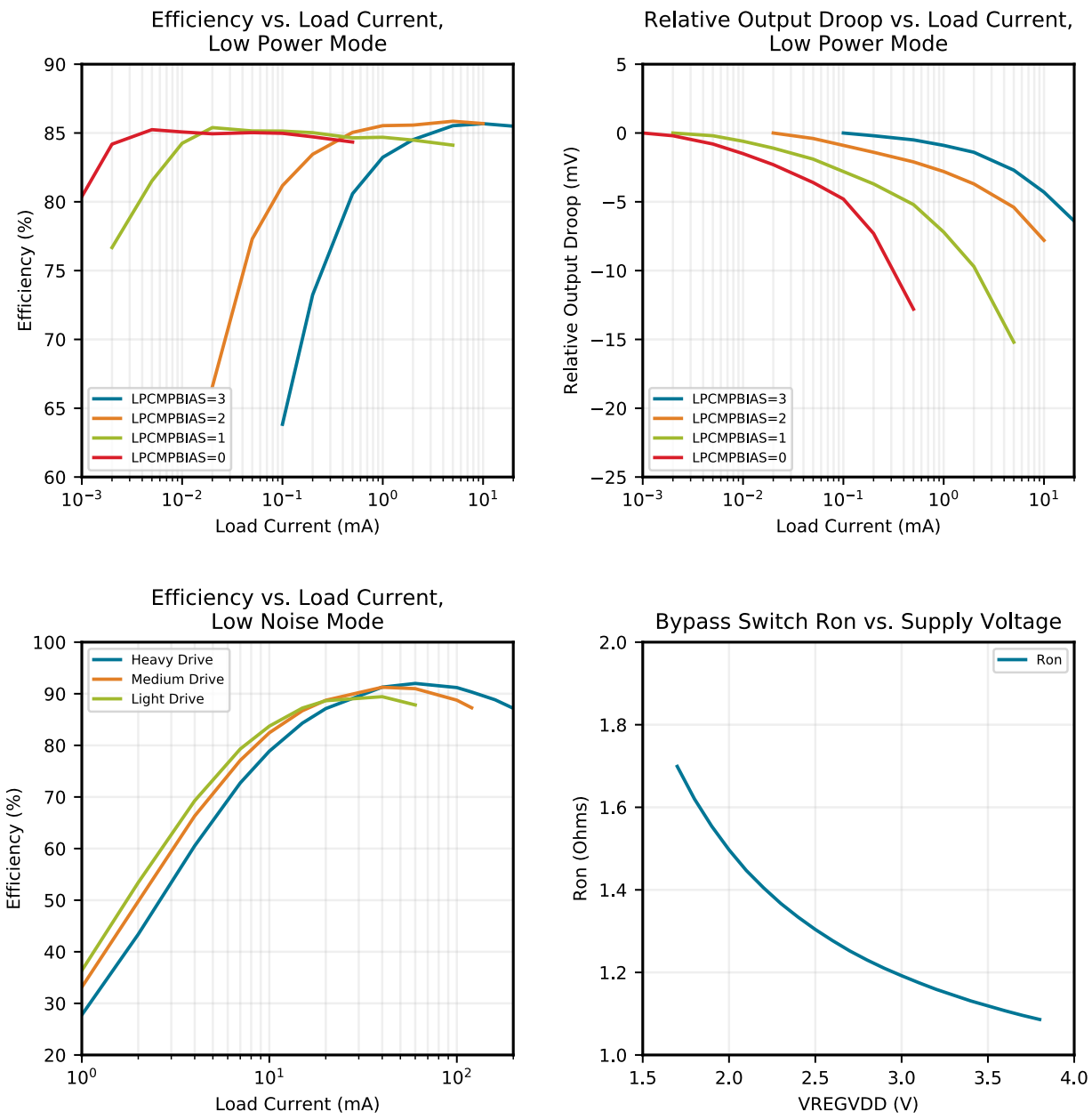

Figure 4.8. DC-DC Converter Typical Performance Characteristics

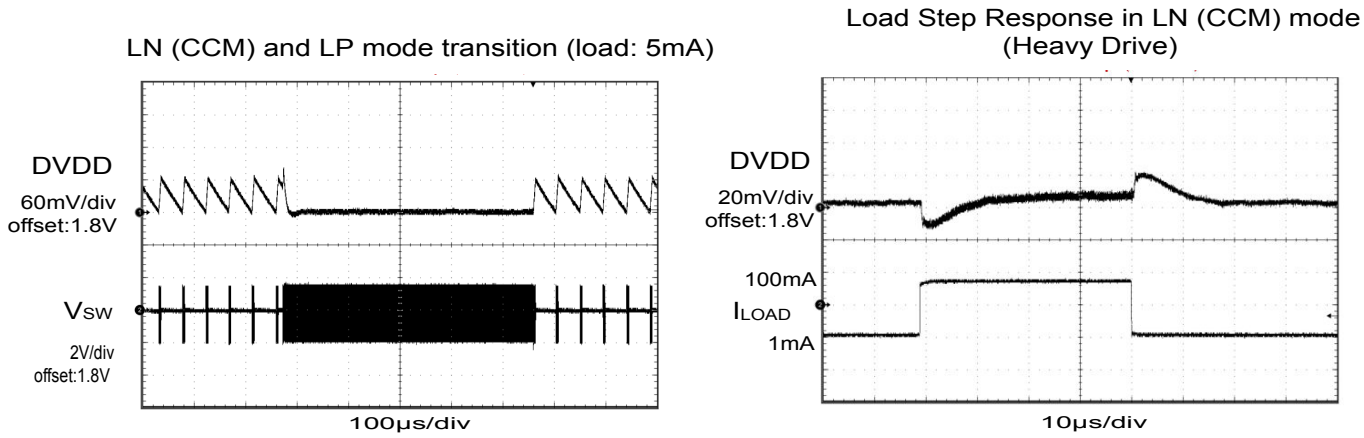

Figure 4.9. DC-DC Converter Transition Waveforms

5. Pin Definitions

5.1 EFM32TG11B5xx in QFP80 Device Pinout

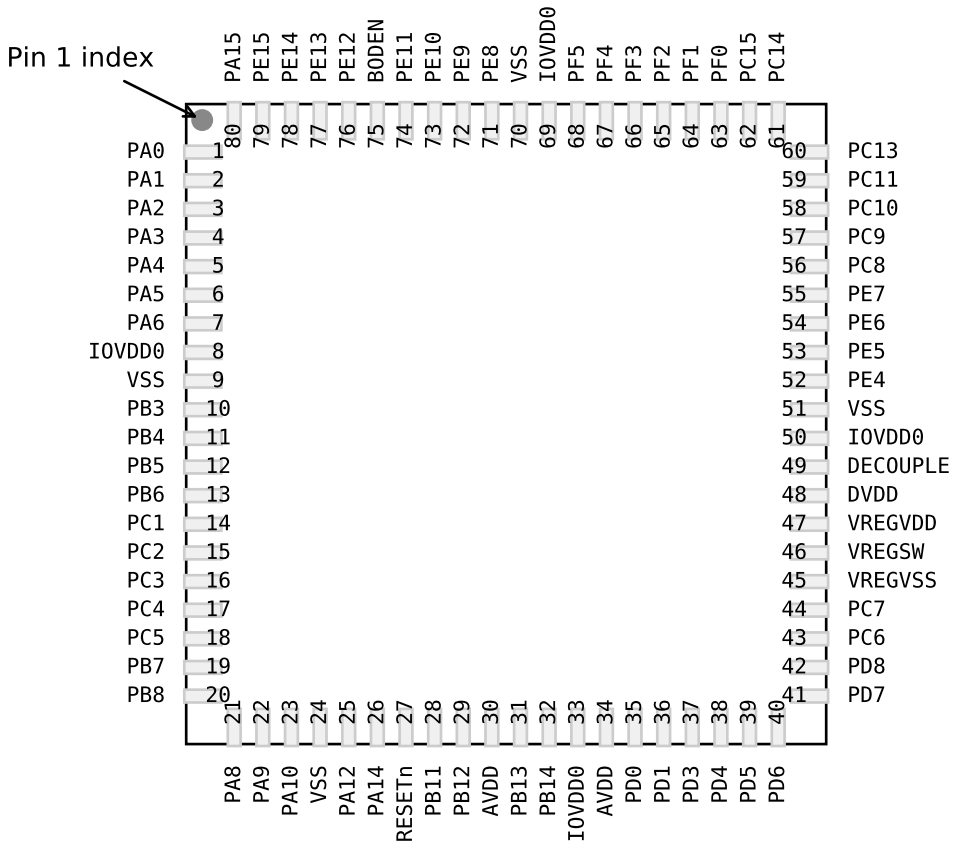

Figure 5.1. EFM32TG11B5xx in QFP80 Device Pinout

The following table provides package pin connections and general descriptions of pin functionality. For detailed information on the supported features for each GPIO pin, see 5.14 GPIO Functionality Table or 5.15 Alternate Functionality Overview.

Table 5.1. EFM32TG11B5xx in QFP80 Device Pinout

Pin Name	Pin(s)	Description	Pin Name	Pin(s)	Description
PA0	1	GPIO	PA1	2	GPIO
PA2	3	GPIO	PA3	4	GPIO
PA4	5	GPIO	PA5	6	GPIO
PA6	7	GPIO	IOVDD0	8 33 50 69	Digital IO power supply 0.

Pin Name	Pin(s)	Description	Pin Name	Pin(s)	Description
VSS	9 24 51 70	Ground	PB3	10	GPIO
PB4	11	GPIO	PB5	12	GPIO
PB6	13	GPIO	PC1	14	GPIO (5V)
PC2	15	GPIO (5V)	PC3	16	GPIO (5V)
PC4	17	GPIO	PC5	18	GPIO
PB7	19	GPIO	PB8	20	GPIO
PA8	21	GPIO	PA9	22	GPIO
PA10	23	GPIO	PA12	25	GPIO
PA14	26	GPIO	RESETn	27	Reset input, active low. To apply an external reset source to this pin, it is required to only drive this pin low during reset, and let the internal pull-up ensure that reset is released.
PB11	28	GPIO	PB12	29	GPIO
AVDD	30 34	Analog power supply.	PB13	31	GPIO
PB14	32	GPIO	PD0	35	GPIO (5V)
PD1	36	GPIO	PD3	37	GPIO
PD4	38	GPIO	PD5	39	GPIO
PD6	40	GPIO	PD7	41	GPIO
PD8	42	GPIO	PC6	43	GPIO
PC7	44	GPIO	VREGVSS	45	Voltage regulator VSS
VREGSW	46	DCDC regulator switching node	VREGVDD	47	Voltage regulator VDD input
DVDD	48	Digital power supply.	DECOUPLE	49	Decouple output for on-chip voltage regulator. An external decoupling capacitor is required at this pin.
PE4	52	GPIO	PE5	53	GPIO
PE6	54	GPIO	PE7	55	GPIO
PC8	56	GPIO	PC9	57	GPIO
PC10	58	GPIO (5V)	PC11	59	GPIO (5V)
PC13	60	GPIO (5V)	PC14	61	GPIO (5V)
PC15	62	GPIO (5V)	PF0	63	GPIO (5V)
PF1	64	GPIO (5V)	PF2	65	GPIO
PF3	66	GPIO	PF4	67	GPIO
PF5	68	GPIO	PE8	71	GPIO
PE9	72	GPIO	PE10	73	GPIO
PE11	74	GPIO	BODEN	75	Brown-Out Detector Enable. This pin may be left disconnected or tied to AVDD.

Pin Name	Pin(s)	Description	Pin Name	Pin(s)	Description
PE12	76	GPIO	PE13	77	GPIO
PE14	78	GPIO	PE15	79	GPIO
PA15	80	GPIO			

Note:

1. GPIO with 5V tolerance are indicated by (5V).

5.2 EFM32TG11B5xx in QFN80 Device Pinout

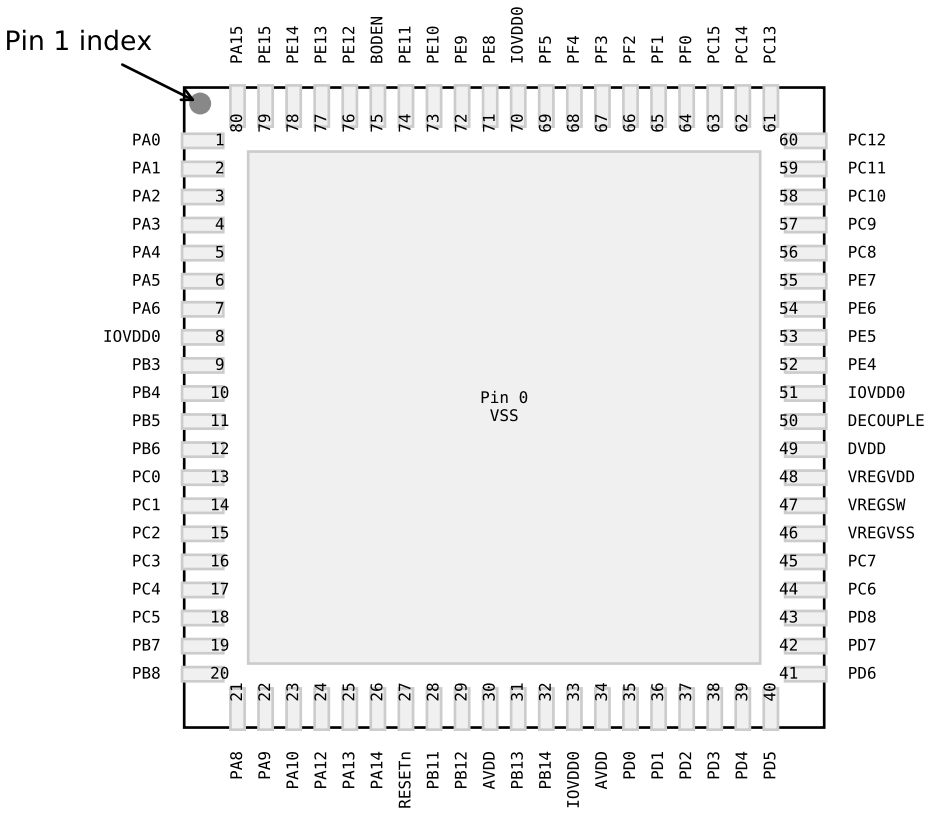

Figure 5.2. EFM32TG11B5xx in QFN80 Device Pinout

The following table provides package pin connections and general descriptions of pin functionality. For detailed information on the supported features for each GPIO pin, see 5.14 GPIO Functionality Table or 5.15 Alternate Functionality Overview.

Table 5.2. EFM32TG11B5xx in QFN80 Device Pinout

Pin Name	Pin(s)	Description	Pin Name	Pin(s)	Description
VSS	0	Ground	PA0	1	GPIO
PA1	2	GPIO	PA2	3	GPIO
PA3	4	GPIO	PA4	5	GPIO
PA5	6	GPIO	PA6	7	GPIO
IOVDD0	8 33 51 70	Digital IO power supply 0.	PB3	9	GPIO

Pin Name	Pin(s)	Description	Pin Name	Pin(s)	Description
PB4	10	GPIO	PB5	11	GPIO
PB6	12	GPIO	PC0	13	GPIO (5V)
PC1	14	GPIO (5V)	PC2	15	GPIO (5V)
PC3	16	GPIO (5V)	PC4	17	GPIO
PC5	18	GPIO	PB7	19	GPIO
PB8	20	GPIO	PA8	21	GPIO
PA9	22	GPIO	PA10	23	GPIO
PA12	24	GPIO	PA13	25	GPIO (5V)
PA14	26	GPIO	RESETn	27	Reset input, active low. To apply an external reset source to this pin, it is required to only drive this pin low during reset, and let the internal pull-up ensure that reset is released.
PB11	28	GPIO	PB12	29	GPIO
AVDD	30 34	Analog power supply.	PB13	31	GPIO
PB14	32	GPIO	PD0	35	GPIO (5V)
PD1	36	GPIO	PD2	37	GPIO (5V)
PD3	38	GPIO	PD4	39	GPIO
PD5	40	GPIO	PD6	41	GPIO
PD7	42	GPIO	PD8	43	GPIO
PC6	44	GPIO	PC7	45	GPIO
VREGVSS	46	Voltage regulator VSS	VREGSW	47	DCDC regulator switching node
VREGVDD	48	Voltage regulator VDD input	DVDD	49	Digital power supply.
DECOUPLE	50	Decouple output for on-chip voltage regulator. An external decoupling capacitor is required at this pin.	PE4	52	GPIO
PE5	53	GPIO	PE6	54	GPIO
PE7	55	GPIO	PC8	56	GPIO
PC9	57	GPIO	PC10	58	GPIO (5V)
PC11	59	GPIO (5V)	PC12	60	GPIO (5V)
PC13	61	GPIO (5V)	PC14	62	GPIO (5V)
PC15	63	GPIO (5V)	PF0	64	GPIO (5V)
PF1	65	GPIO (5V)	PF2	66	GPIO
PF3	67	GPIO	PF4	68	GPIO
PF5	69	GPIO	PE8	71	GPIO
PE9	72	GPIO	PE10	73	GPIO
PE11	74	GPIO	BODEN	75	Brown-Out Detector Enable. This pin may be left disconnected or tied to AVDD.
PE12	76	GPIO	PE13	77	GPIO

Pin Name	Pin(s)	Description	Pin Name	Pin(s)	Description
PE14	78	GPIO	PE15	79	GPIO
PA15	80	GPIO			

Note:

1. GPIO with 5V tolerance are indicated by (5V).

5.3 EFM32TG11B5xx in QFP64 Device Pinout

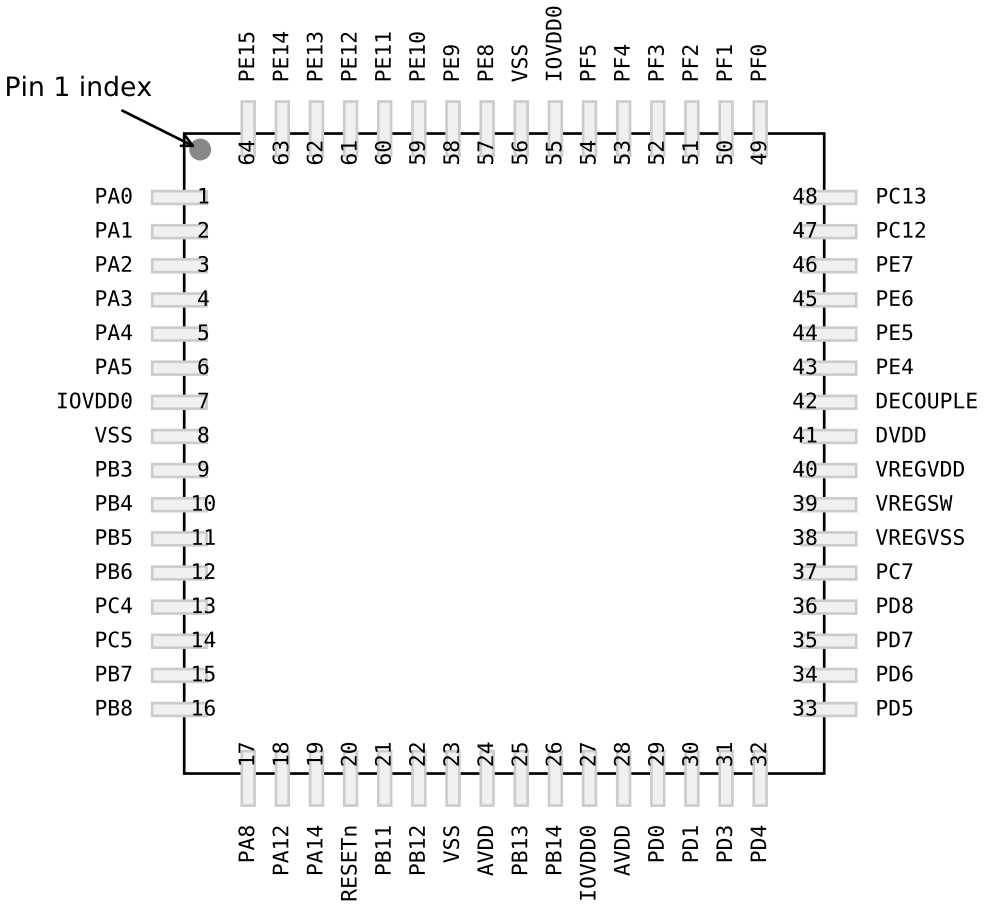

Figure 5.3. EFM32TG11B5xx in QFP64 Device Pinout

The following table provides package pin connections and general descriptions of pin functionality. For detailed information on the supported features for each GPIO pin, see 5.14 GPIO Functionality Table or 5.15 Alternate Functionality Overview.

Table 5.3. EFM32TG11B5xx in QFP64 Device Pinout

Pin Name	Pin(s)	Description	Pin Name	Pin(s)	Description
PA0	1	GPIO	PA1	2	GPIO
PA2	3	GPIO	PA3	4	GPIO
PA4	5	GPIO	PA5	6	GPIO
IOVDD0	7 27 55	Digital IO power supply 0.	VSS	8 23 56	Ground
PB3	9	GPIO	PB4	10	GPIO
PB5	11	GPIO	PB6	12	GPIO

Pin Name	Pin(s)	Description	Pin Name	Pin(s)	Description
PC4	13	GPIO	PC5	14	GPIO
PB7	15	GPIO	PB8	16	GPIO
PA8	17	GPIO	PA12	18	GPIO
PA14	19	GPIO	RESETn	20	Reset input, active low. To apply an external reset source to this pin, it is required to only drive this pin low during reset, and let the internal pull-up ensure that reset is released.
PB11	21	GPIO	PB12	22	GPIO
AVDD	24 28	Analog power supply.	PB13	25	GPIO
PB14	26	GPIO	PD0	29	GPIO (5V)
PD1	30	GPIO	PD3	31	GPIO
PD4	32	GPIO	PD5	33	GPIO
PD6	34	GPIO	PD7	35	GPIO
PD8	36	GPIO	PC7	37	GPIO
VREGVSS	38	Voltage regulator VSS	VREGSW	39	DCDC regulator switching node
VREGVDD	40	Voltage regulator VDD input	DVDD	41	Digital power supply.
DECOUPLE	42	Decouple output for on-chip voltage regulator. An external decoupling capacitor is required at this pin.	PE4	43	GPIO
PE5	44	GPIO	PE6	45	GPIO
PE7	46	GPIO	PC12	47	GPIO (5V)
PC13	48	GPIO (5V)	PF0	49	GPIO (5V)
PF1	50	GPIO (5V)	PF2	51	GPIO
PF3	52	GPIO	PF4	53	GPIO
PF5	54	GPIO	PE8	57	GPIO
PE9	58	GPIO	PE10	59	GPIO
PE11	60	GPIO	PE12	61	GPIO
PE13	62	GPIO	PE14	63	GPIO
PE15	64	GPIO			

Note:

1. GPIO with 5V tolerance are indicated by (5V).

5.4 EFM32TG11B3xx in QFP64 Device Pinout

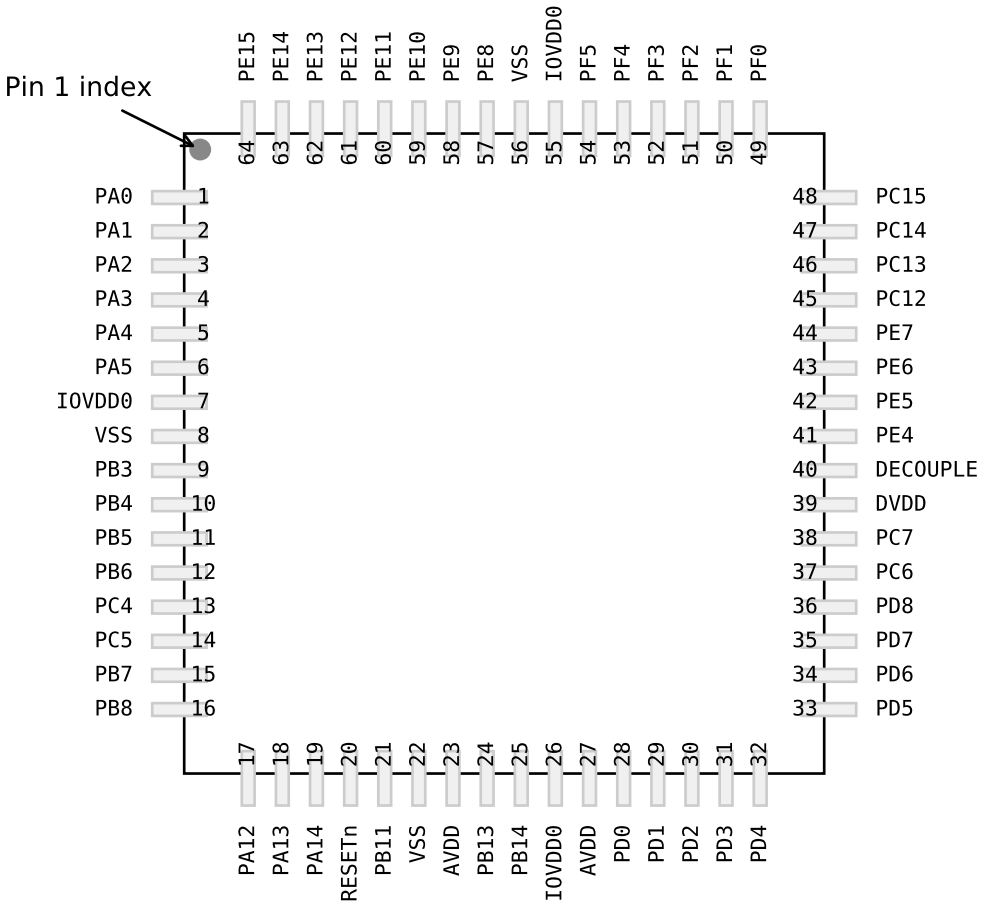

Figure 5.4. EFM32TG11B3xx in QFP64 Device Pinout

The following table provides package pin connections and general descriptions of pin functionality. For detailed information on the supported features for each GPIO pin, see 5.14 GPIO Functionality Table or 5.15 Alternate Functionality Overview.

Table 5.4. EFM32TG11B3xx in QFP64 Device Pinout

Pin Name	Pin(s)	Description	Pin Name	Pin(s)	Description
PA0	1	GPIO	PA1	2	GPIO
PA2	3	GPIO	PA3	4	GPIO
PA4	5	GPIO	PA5	6	GPIO
IOVDD0	7 26 55	Digital IO power supply 0.	VSS	8 22 56	Ground
PB3	9	GPIO	PB4	10	GPIO
PB5	11	GPIO	PB6	12	GPIO

Pin Name	Pin(s)	Description	Pin Name	Pin(s)	Description
PC4	13	GPIO	PC5	14	GPIO
PB7	15	GPIO	PB8	16	GPIO
PA12	17	GPIO	PA13	18	GPIO (5V)
PA14	19	GPIO	RESETn	20	Reset input, active low. To apply an external reset source to this pin, it is required to only drive this pin low during reset, and let the internal pull-up ensure that reset is released.
PB11	21	GPIO	AVDD	23 27	Analog power supply.
PB13	24	GPIO	PB14	25	GPIO
PD0	28	GPIO (5V)	PD1	29	GPIO
PD2	30	GPIO (5V)	PD3	31	GPIO
PD4	32	GPIO	PD5	33	GPIO
PD6	34	GPIO	PD7	35	GPIO
PD8	36	GPIO	PC6	37	GPIO
PC7	38	GPIO	DVDD	39	Digital power supply.
DECOUPLE	40	Decouple output for on-chip voltage regulator. An external decoupling capacitor is required at this pin.	PE4	41	GPIO
PE5	42	GPIO	PE6	43	GPIO
PE7	44	GPIO	PC12	45	GPIO (5V)
PC13	46	GPIO (5V)	PC14	47	GPIO (5V)
PC15	48	GPIO (5V)	PF0	49	GPIO (5V)
PF1	50	GPIO (5V)	PF2	51	GPIO
PF3	52	GPIO	PF4	53	GPIO
PF5	54	GPIO	PE8	57	GPIO
PE9	58	GPIO	PE10	59	GPIO
PE11	60	GPIO	PE12	61	GPIO
PE13	62	GPIO	PE14	63	GPIO
PE15	64	GPIO			

Note:

1. GPIO with 5V tolerance are indicated by (5V).

5.5 EFM32TG11B1xx in QFP64 Device Pinout

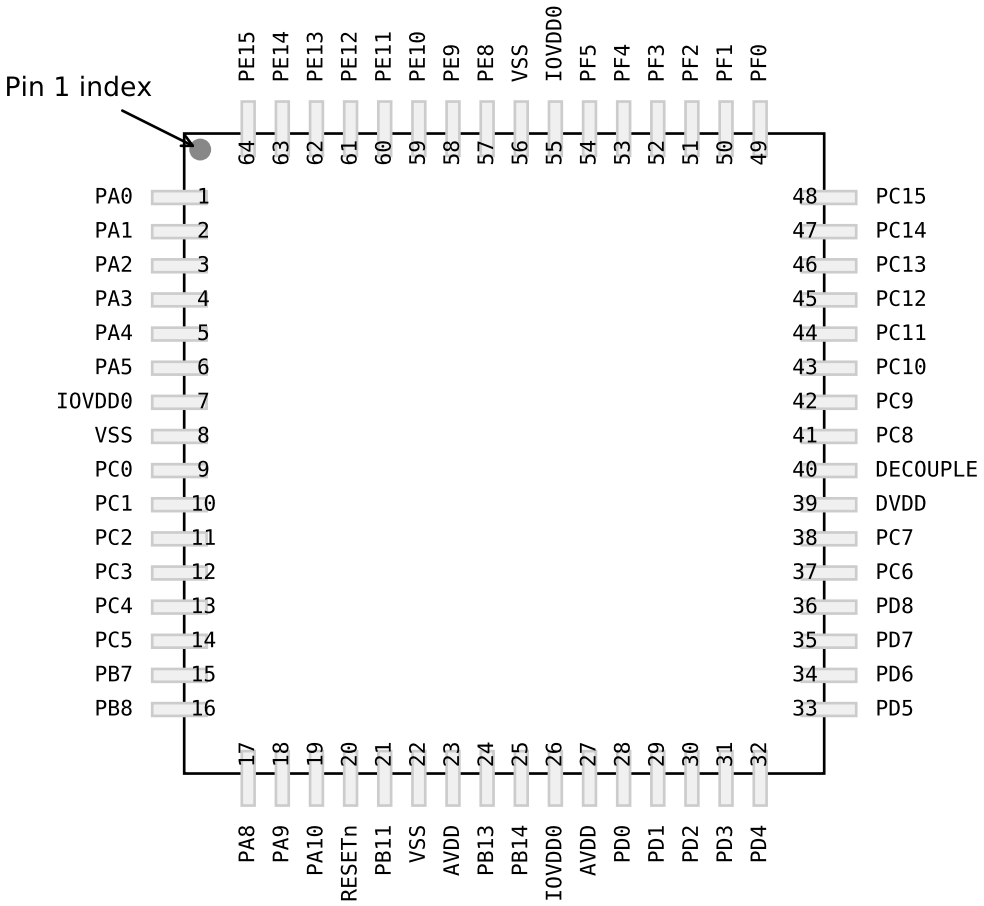

Figure 5.5. EFM32TG11B1xx in QFP64 Device Pinout

The following table provides package pin connections and general descriptions of pin functionality. For detailed information on the supported features for each GPIO pin, see 5.14 GPIO Functionality Table or 5.15 Alternate Functionality Overview.

Table 5.5. EFM32TG11B1xx in QFP64 Device Pinout

Pin Name	Pin(s)	Description	Pin Name	Pin(s)	Description
PA0	1	GPIO	PA1	2	GPIO
PA2	3	GPIO	PA3	4	GPIO
PA4	5	GPIO	PA5	6	GPIO
IOVDD0	7 26 55	Digital IO power supply 0.	VSS	8 22 56	Ground
PC0	9	GPIO (5V)	PC1	10	GPIO (5V)
PC2	11	GPIO (5V)	PC3	12	GPIO (5V)

Pin Name	Pin(s)	Description	Pin Name	Pin(s)	Description
PC4	13	GPIO	PC5	14	GPIO
PB7	15	GPIO	PB8	16	GPIO
PA8	17	GPIO	PA9	18	GPIO
PA10	19	GPIO	RESETn	20	Reset input, active low. To apply an external reset source to this pin, it is required to only drive this pin low during reset, and let the internal pull-up ensure that reset is released.
PB11	21	GPIO	AVDD	23 27	Analog power supply.
PB13	24	GPIO	PB14	25	GPIO
PD0	28	GPIO (5V)	PD1	29	GPIO
PD2	30	GPIO (5V)	PD3	31	GPIO
PD4	32	GPIO	PD5	33	GPIO
PD6	34	GPIO	PD7	35	GPIO
PD8	36	GPIO	PC6	37	GPIO
PC7	38	GPIO	DVDD	39	Digital power supply.
DECOUPLE	40	Decouple output for on-chip voltage regulator. An external decoupling capacitor is required at this pin.	PC8	41	GPIO
PC9	42	GPIO	PC10	43	GPIO (5V)
PC11	44	GPIO (5V)	PC12	45	GPIO (5V)
PC13	46	GPIO (5V)	PC14	47	GPIO (5V)
PC15	48	GPIO (5V)	PF0	49	GPIO (5V)
PF1	50	GPIO (5V)	PF2	51	GPIO
PF3	52	GPIO	PF4	53	GPIO
PF5	54	GPIO	PE8	57	GPIO
PE9	58	GPIO	PE10	59	GPIO
PE11	60	GPIO	PE12	61	GPIO
PE13	62	GPIO	PE14	63	GPIO
PE15	64	GPIO			

Note:

1. GPIO with 5V tolerance are indicated by (5V).

5.6 EFM32TG11B5xx in QFN64 Device Pinout

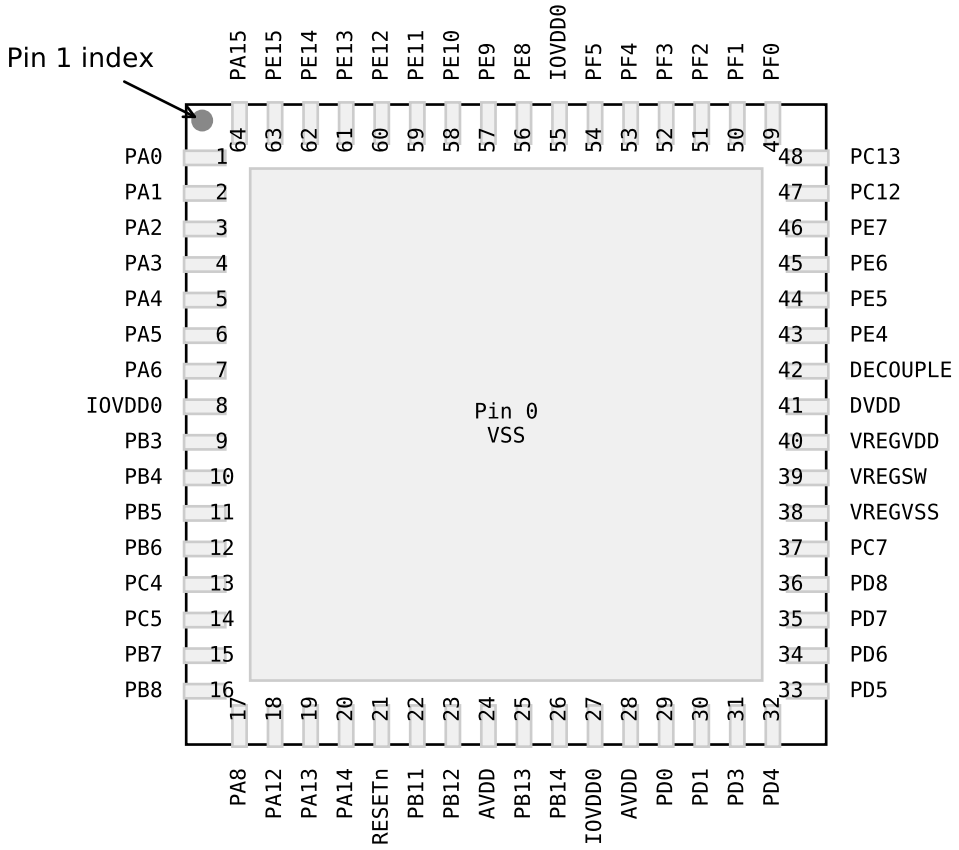

Figure 5.6. EFM32TG11B5xx in QFN64 Device Pinout

The following table provides package pin connections and general descriptions of pin functionality. For detailed information on the supported features for each GPIO pin, see 5.14 GPIO Functionality Table or 5.15 Alternate Functionality Overview.

Table 5.6. EFM32TG11B5xx in QFN64 Device Pinout

Pin Name	Pin(s)	Description	Pin Name	Pin(s)	Description
VSS	0	Ground	PA0	1	GPIO
PA1	2	GPIO	PA2	3	GPIO
PA3	4	GPIO	PA4	5	GPIO
PA5	6	GPIO	PA6	7	GPIO
IOVDD0	8 27 55	Digital IO power supply 0.	PB3	9	GPIO
PB4	10	GPIO	PB5	11	GPIO

Pin Name	Pin(s)	Description	Pin Name	Pin(s)	Description
PB6	12	GPIO	PC4	13	GPIO
PC5	14	GPIO	PB7	15	GPIO
PB8	16	GPIO	PA8	17	GPIO
PA12	18	GPIO	PA13	19	GPIO (5V)
PA14	20	GPIO	RESETn	21	Reset input, active low. To apply an external reset source to this pin, it is required to only drive this pin low during reset, and let the internal pull-up ensure that reset is released.
PB11	22	GPIO	PB12	23	GPIO
AVDD	24 28	Analog power supply.	PB13	25	GPIO
PB14	26	GPIO	PD0	29	GPIO (5V)
PD1	30	GPIO	PD3	31	GPIO
PD4	32	GPIO	PD5	33	GPIO
PD6	34	GPIO	PD7	35	GPIO
PD8	36	GPIO	PC7	37	GPIO
VREGVSS	38	Voltage regulator VSS	VREGSW	39	DCDC regulator switching node
VREGVDD	40	Voltage regulator VDD input	DVDD	41	Digital power supply.
DECOUPLE	42	Decouple output for on-chip voltage regulator. An external decoupling capacitor is required at this pin.	PE4	43	GPIO
PE5	44	GPIO	PE6	45	GPIO
PE7	46	GPIO	PC12	47	GPIO (5V)
PC13	48	GPIO (5V)	PF0	49	GPIO (5V)
PF1	50	GPIO (5V)	PF2	51	GPIO
PF3	52	GPIO	PF4	53	GPIO
PF5	54	GPIO	PE8	56	GPIO
PE9	57	GPIO	PE10	58	GPIO
PE11	59	GPIO	PE12	60	GPIO
PE13	61	GPIO	PE14	62	GPIO
PE15	63	GPIO	PA15	64	GPIO

Note:

1. GPIO with 5V tolerance are indicated by (5V).

5.7 EFM32TG11B3xx in QFN64 Device Pinout

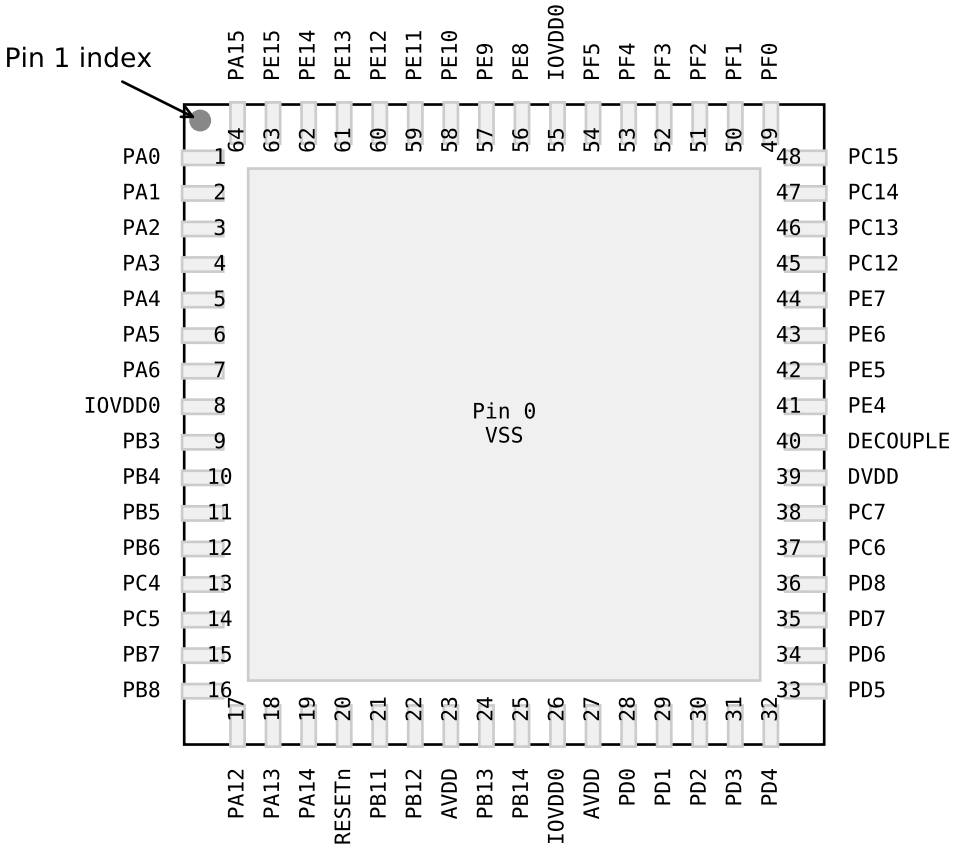

Figure 5.7. EFM32TG11B3xx in QFN64 Device Pinout

The following table provides package pin connections and general descriptions of pin functionality. For detailed information on the supported features for each GPIO pin, see 5.14 GPIO Functionality Table or 5.15 Alternate Functionality Overview.

Table 5.7. EFM32TG11B3xx in QFN64 Device Pinout

Pin Name	Pin(s)	Description	Pin Name	Pin(s)	Description
VSS	0	Ground	PA0	1	GPIO
PA1	2	GPIO	PA2	3	GPIO
PA3	4	GPIO	PA4	5	GPIO
PA5	6	GPIO	PA6	7	GPIO
IOVDD0	8 26 55	Digital IO power supply 0.	PB3	9	GPIO
PB4	10	GPIO	PB5	11	GPIO

Pin Name	Pin(s)	Description	Pin Name	Pin(s)	Description
PB6	12	GPIO	PC4	13	GPIO
PC5	14	GPIO	PB7	15	GPIO
PB8	16	GPIO	PA12	17	GPIO
PA13	18	GPIO (5V)	PA14	19	GPIO
RESETn	20	Reset input, active low. To apply an external reset source to this pin, it is required to only drive this pin low during reset, and let the internal pull-up ensure that reset is released.	PB11	21	GPIO
PB12	22	GPIO	AVDD	23 27	Analog power supply.
PB13	24	GPIO	PB14	25	GPIO
PD0	28	GPIO (5V)	PD1	29	GPIO
PD2	30	GPIO (5V)	PD3	31	GPIO
PD4	32	GPIO	PD5	33	GPIO
PD6	34	GPIO	PD7	35	GPIO
PD8	36	GPIO	PC6	37	GPIO
PC7	38	GPIO	DVDD	39	Digital power supply.
DECOUPLE	40	Decouple output for on-chip voltage regulator. An external decoupling capacitor is required at this pin.	PE4	41	GPIO
PE5	42	GPIO	PE6	43	GPIO
PE7	44	GPIO	PC12	45	GPIO (5V)
PC13	46	GPIO (5V)	PC14	47	GPIO (5V)
PC15	48	GPIO (5V)	PF0	49	GPIO (5V)
PF1	50	GPIO (5V)	PF2	51	GPIO
PF3	52	GPIO	PF4	53	GPIO
PF5	54	GPIO	PE8	56	GPIO
PE9	57	GPIO	PE10	58	GPIO
PE11	59	GPIO	PE12	60	GPIO
PE13	61	GPIO	PE14	62	GPIO
PE15	63	GPIO	PA15	64	GPIO

Note:

1. GPIO with 5V tolerance are indicated by (5V).

5.8 EFM32TG11B1xx in QFN64 Device Pinout

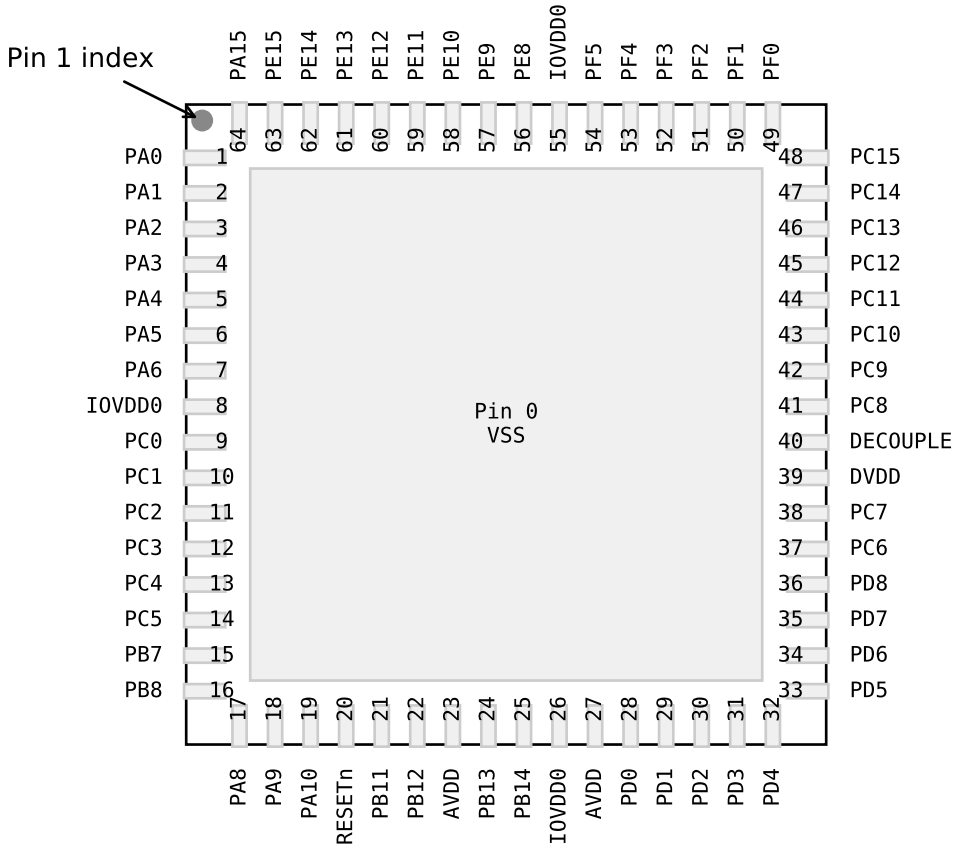

Figure 5.8. EFM32TG11B1xx in QFN64 Device Pinout

The following table provides package pin connections and general descriptions of pin functionality. For detailed information on the supported features for each GPIO pin, see 5.14 GPIO Functionality Table or 5.15 Alternate Functionality Overview.

Table 5.8. EFM32TG11B1xx in QFN64 Device Pinout

Pin Name	Pin(s)	Description	Pin Name	Pin(s)	Description
VSS	0	Ground	PA0	1	GPIO
PA1	2	GPIO	PA2	3	GPIO
PA3	4	GPIO	PA4	5	GPIO
PA5	6	GPIO	PA6	7	GPIO
IOVDD0	8 26 55	Digital IO power supply 0.	PC0	9	GPIO (5V)
PC1	10	GPIO (5V)	PC2	11	GPIO (5V)

Pin Name	Pin(s)	Description	Pin Name	Pin(s)	Description
PC3	12	GPIO (5V)	PC4	13	GPIO
PC5	14	GPIO	PB7	15	GPIO
PB8	16	GPIO	PA8	17	GPIO
PA9	18	GPIO	PA10	19	GPIO
RESETn	20	Reset input, active low. To apply an external reset source to this pin, it is required to only drive this pin low during reset, and let the internal pull-up ensure that reset is released.	PB11	21	GPIO
PB12	22	GPIO	AVDD	23 27	Analog power supply.
PB13	24	GPIO	PB14	25	GPIO
PD0	28	GPIO (5V)	PD1	29	GPIO
PD2	30	GPIO (5V)	PD3	31	GPIO
PD4	32	GPIO	PD5	33	GPIO
PD6	34	GPIO	PD7	35	GPIO
PD8	36	GPIO	PC6	37	GPIO
PC7	38	GPIO	DVDD	39	Digital power supply.
DECOUPLE	40	Decouple output for on-chip voltage regulator. An external decoupling capacitor is required at this pin.	PC8	41	GPIO
PC9	42	GPIO	PC10	43	GPIO (5V)
PC11	44	GPIO (5V)	PC12	45	GPIO (5V)
PC13	46	GPIO (5V)	PC14	47	GPIO (5V)
PC15	48	GPIO (5V)	PF0	49	GPIO (5V)
PF1	50	GPIO (5V)	PF2	51	GPIO
PF3	52	GPIO	PF4	53	GPIO
PF5	54	GPIO	PE8	56	GPIO
PE9	57	GPIO	PE10	58	GPIO
PE11	59	GPIO	PE12	60	GPIO
PE13	61	GPIO	PE14	62	GPIO
PE15	63	GPIO	PA15	64	GPIO

Note:

1. GPIO with 5V tolerance are indicated by (5V).

5.9 EFM32TG11B5xx in QFP48 Device Pinout

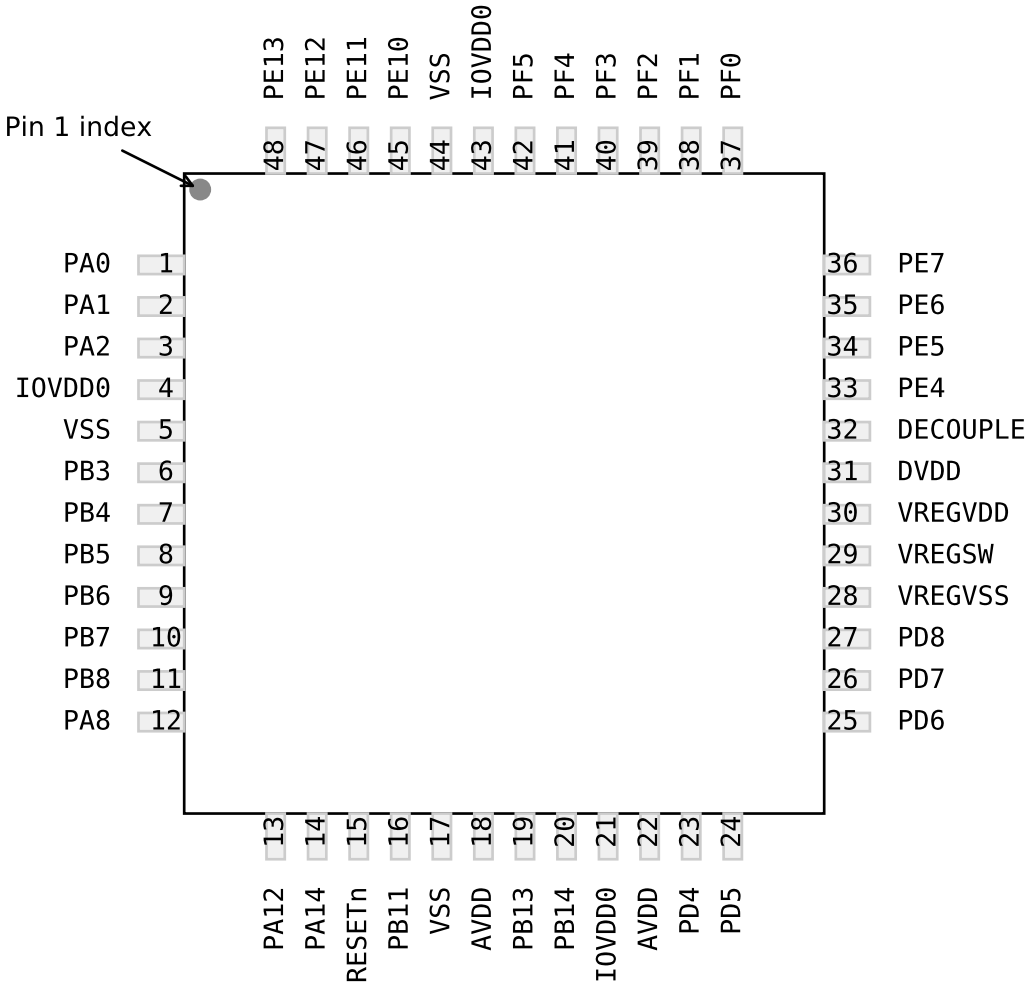

Figure 5.9. EFM32TG11B5xx in QFP48 Device Pinout

The following table provides package pin connections and general descriptions of pin functionality. For detailed information on the supported features for each GPIO pin, see 5.14 GPIO Functionality Table or 5.15 Alternate Functionality Overview.

Table 5.9. EFM32TG11B5xx in QFP48 Device Pinout

Pin Name	Pin(s)	Description	Pin Name	Pin(s)	Description
PA0	1	GPIO	PA1	2	GPIO
PA2	3	GPIO	IOVDD0	4 21 43	Digital IO power supply 0.
VSS	5 17 44	Ground	PB3	6	GPIO
PB4	7	GPIO	PB5	8	GPIO
PB6	9	GPIO	PB7	10	GPIO

Pin Name	Pin(s)	Description	Pin Name	Pin(s)	Description
PB8	11	GPIO	PA8	12	GPIO
PA12	13	GPIO	PA14	14	GPIO
RESETn	15	Reset input, active low. To apply an external reset source to this pin, it is required to only drive this pin low during reset, and let the internal pull-up ensure that reset is released.	PB11	16	GPIO
AVDD	18 22	Analog power supply.	PB13	19	GPIO
PB14	20	GPIO	PD4	23	GPIO
PD5	24	GPIO	PD6	25	GPIO
PD7	26	GPIO	PD8	27	GPIO
VREGVSS	28	Voltage regulator VSS	VREGSW	29	DCDC regulator switching node
VREGVDD	30	Voltage regulator VDD input	DVDD	31	Digital power supply.
DECOUPLE	32	Decouple output for on-chip voltage regulator. An external decoupling capacitor is required at this pin.	PE4	33	GPIO
PE5	34	GPIO	PE6	35	GPIO
PE7	36	GPIO	PF0	37	GPIO (5V)
PF1	38	GPIO (5V)	PF2	39	GPIO
PF3	40	GPIO	PF4	41	GPIO
PF5	42	GPIO	PE10	45	GPIO
PE11	46	GPIO	PE12	47	GPIO
PE13	48	GPIO			

Note:

1. GPIO with 5V tolerance are indicated by (5V).

5.10 EFM32TG11B3xx in QFP48 Device Pinout

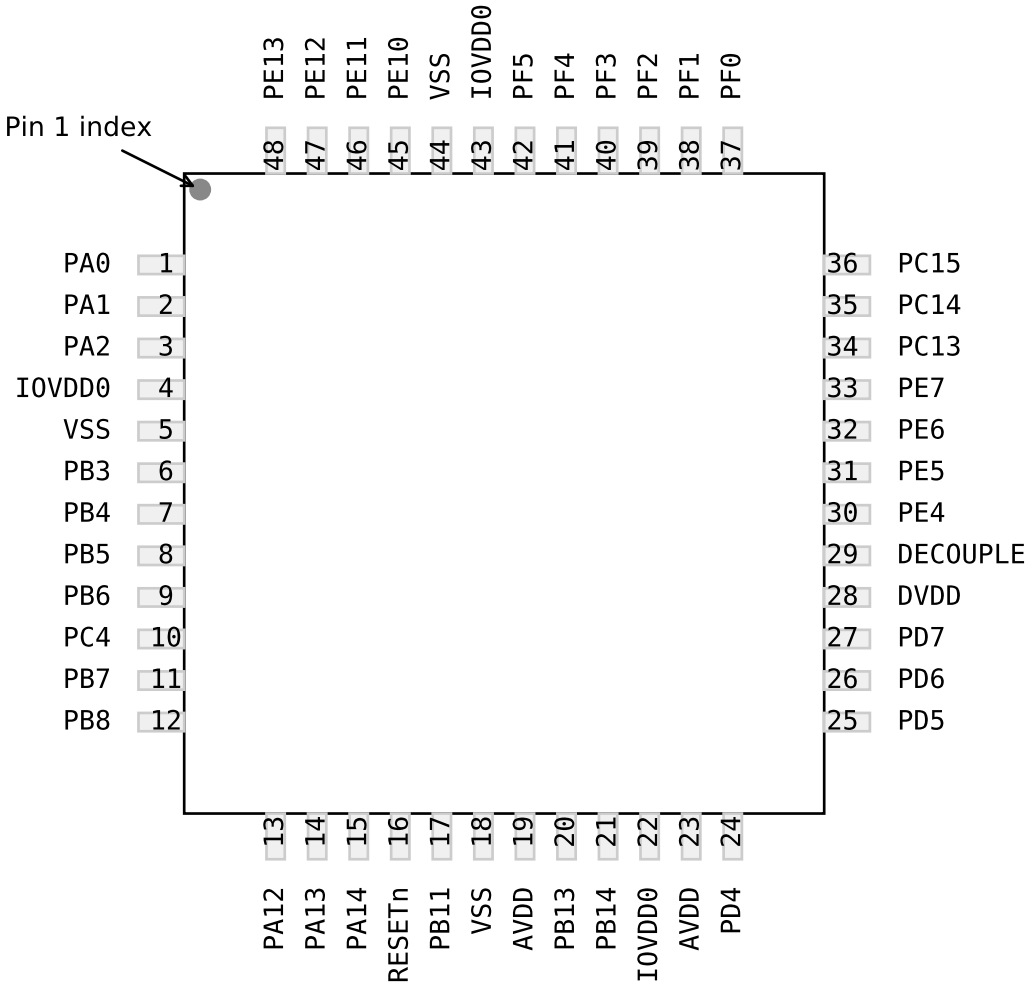

Figure 5.10. EFM32TG11B3xx in QFP48 Device Pinout

The following table provides package pin connections and general descriptions of pin functionality. For detailed information on the supported features for each GPIO pin, see 5.14 GPIO Functionality Table or 5.15 Alternate Functionality Overview.

Table 5.10. EFM32TG11B3xx in QFP48 Device Pinout

Pin Name	Pin(s)	Description	Pin Name	Pin(s)	Description
PA0	1	GPIO	PA1	2	GPIO
PA2	3	GPIO	IOVDD0	4 22 43	Digital IO power supply 0.
VSS	5 18 44	Ground	PB3	6	GPIO
PB4	7	GPIO	PB5	8	GPIO
PB6	9	GPIO	PC4	10	GPIO

Pin Name	Pin(s)	Description	Pin Name	Pin(s)	Description
PB7	11	GPIO	PB8	12	GPIO
PA12	13	GPIO	PA13	14	GPIO (5V)
PA14	15	GPIO	RESETn	16	Reset input, active low. To apply an external reset source to this pin, it is required to only drive this pin low during reset, and let the internal pull-up ensure that reset is released.
PB11	17	GPIO	AVDD	19 23	Analog power supply.
PB13	20	GPIO	PB14	21	GPIO
PD4	24	GPIO	PD5	25	GPIO
PD6	26	GPIO	PD7	27	GPIO
DVDD	28	Digital power supply.	DECOUPLE	29	Decouple output for on-chip voltage regulator. An external decoupling capacitor is required at this pin.
PE4	30	GPIO	PE5	31	GPIO
PE6	32	GPIO	PE7	33	GPIO
PC13	34	GPIO (5V)	PC14	35	GPIO (5V)
PC15	36	GPIO (5V)	PF0	37	GPIO (5V)
PF1	38	GPIO (5V)	PF2	39	GPIO
PF3	40	GPIO	PF4	41	GPIO
PF5	42	GPIO	PE10	45	GPIO
PE11	46	GPIO	PE12	47	GPIO
PE13	48	GPIO			

Note:

1. GPIO with 5V tolerance are indicated by (5V).

5.11 EFM32TG11B1xx in QFP48 Device Pinout

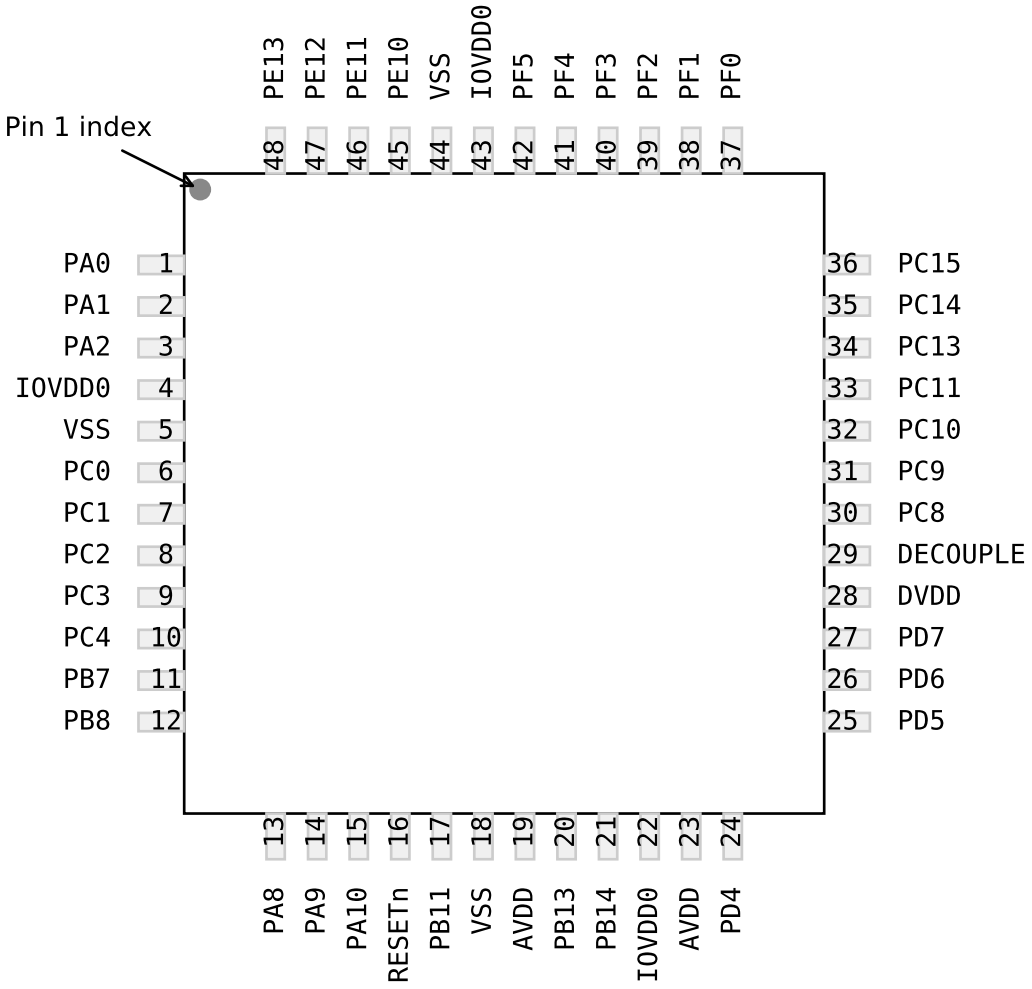

Figure 5.11. EFM32TG11B1xx in QFP48 Device Pinout

The following table provides package pin connections and general descriptions of pin functionality. For detailed information on the supported features for each GPIO pin, see 5.14 GPIO Functionality Table or 5.15 Alternate Functionality Overview.

Table 5.11. EFM32TG11B1xx in QFP48 Device Pinout

Pin Name	Pin(s)	Description	Pin Name	Pin(s)	Description
PA0	1	GPIO	PA1	2	GPIO
PA2	3	GPIO	IOVDD0	4 22 43	Digital IO power supply 0.
VSS	5 18 44	Ground	PC0	6	GPIO (5V)
PC1	7	GPIO (5V)	PC2	8	GPIO (5V)
PC3	9	GPIO (5V)	PC4	10	GPIO

Pin Name	Pin(s)	Description	Pin Name	Pin(s)	Description
PB7	11	GPIO	PB8	12	GPIO
PA8	13	GPIO	PA9	14	GPIO
PA10	15	GPIO	RESETn	16	Reset input, active low. To apply an external reset source to this pin, it is required to only drive this pin low during reset, and let the internal pull-up ensure that reset is released.
PB11	17	GPIO	AVDD	19 23	Analog power supply.
PB13	20	GPIO	PB14	21	GPIO
PD4	24	GPIO	PD5	25	GPIO
PD6	26	GPIO	PD7	27	GPIO
DVDD	28	Digital power supply.	DECOUPLE	29	Decouple output for on-chip voltage regulator. An external decoupling capacitor is required at this pin.
PC8	30	GPIO	PC9	31	GPIO
PC10	32	GPIO (5V)	PC11	33	GPIO (5V)
PC13	34	GPIO (5V)	PC14	35	GPIO (5V)
PC15	36	GPIO (5V)	PF0	37	GPIO (5V)
PF1	38	GPIO (5V)	PF2	39	GPIO
PF3	40	GPIO	PF4	41	GPIO
PF5	42	GPIO	PE10	45	GPIO
PE11	46	GPIO	PE12	47	GPIO
PE13	48	GPIO			

Note:

1. GPIO with 5V tolerance are indicated by (5V).

5.12 EFM32TG11B5xx in QFN32 Device Pinout

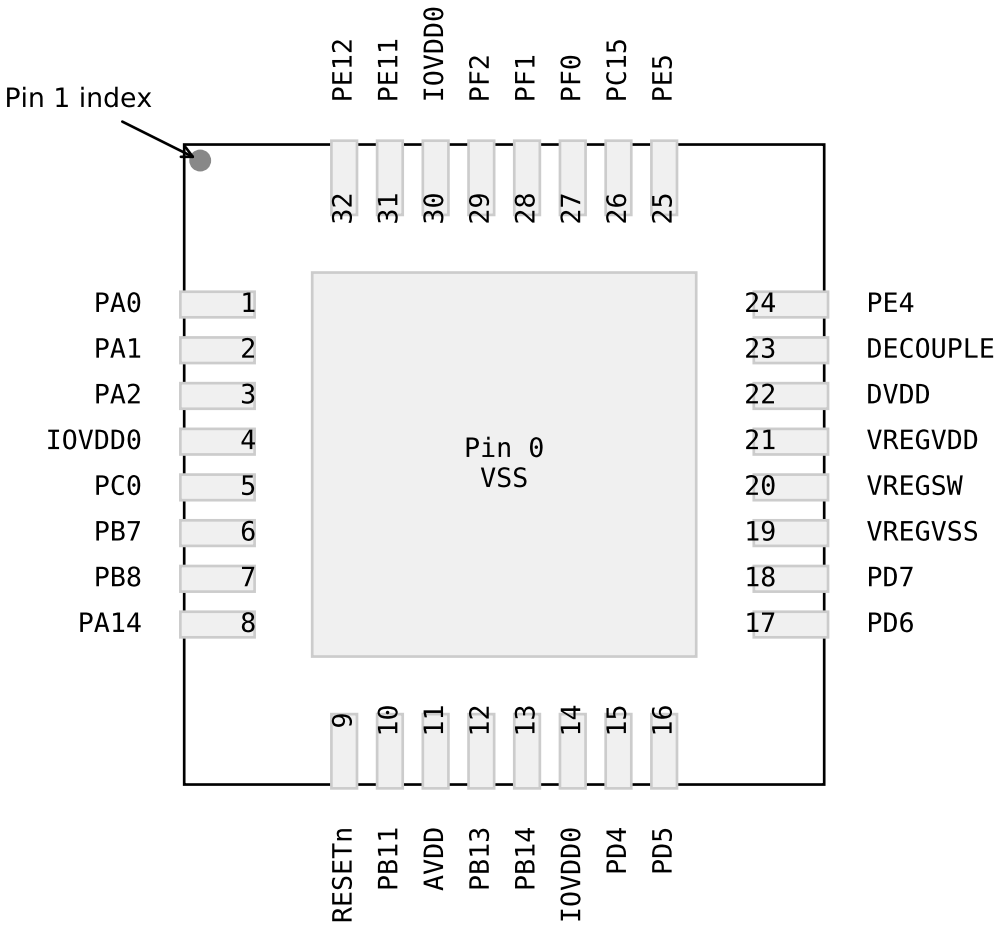

Figure 5.12. EFM32TG11B5xx in QFN32 Device Pinout

The following table provides package pin connections and general descriptions of pin functionality. For detailed information on the supported features for each GPIO pin, see 5.14 GPIO Functionality Table or 5.15 Alternate Functionality Overview.

Table 5.12. EFM32TG11B5xx in QFN32 Device Pinout

Pin Name	Pin(s)	Description	Pin Name	Pin(s)	Description
VSS	0	Ground	PA0	1	GPIO
PA1	2	GPIO	PA2	3	GPIO
IOVDD0	4 14 30	Digital IO power supply 0.	PC0	5	GPIO (5V)
PB7	6	GPIO	PB8	7	GPIO

Pin Name	Pin(s)	Description	Pin Name	Pin(s)	Description
PA14	8	GPIO	RESETn	9	Reset input, active low. To apply an external reset source to this pin, it is required to only drive this pin low during reset, and let the internal pull-up ensure that reset is released.
PB11	10	GPIO	AVDD	11	Analog power supply.
PB13	12	GPIO	PB14	13	GPIO
PD4	15	GPIO	PD5	16	GPIO
PD6	17	GPIO	PD7	18	GPIO
VREGVSS	19	Voltage regulator VSS	VREGSW	20	DCDC regulator switching node
VREGVDD	21	Voltage regulator VDD input	DVDD	22	Digital power supply.
DECOUPLE	23	Decouple output for on-chip voltage regulator. An external decoupling capacitor is required at this pin.	PE4	24	GPIO
PE5	25	GPIO	PC15	26	GPIO (5V)
PF0	27	GPIO (5V)	PF1	28	GPIO (5V)
PF2	29	GPIO	PE11	31	GPIO
PE12	32	GPIO			

Note:

1. GPIO with 5V tolerance are indicated by (5V).

5.13 EFM32TG11B1xx in QFN32 Device Pinout

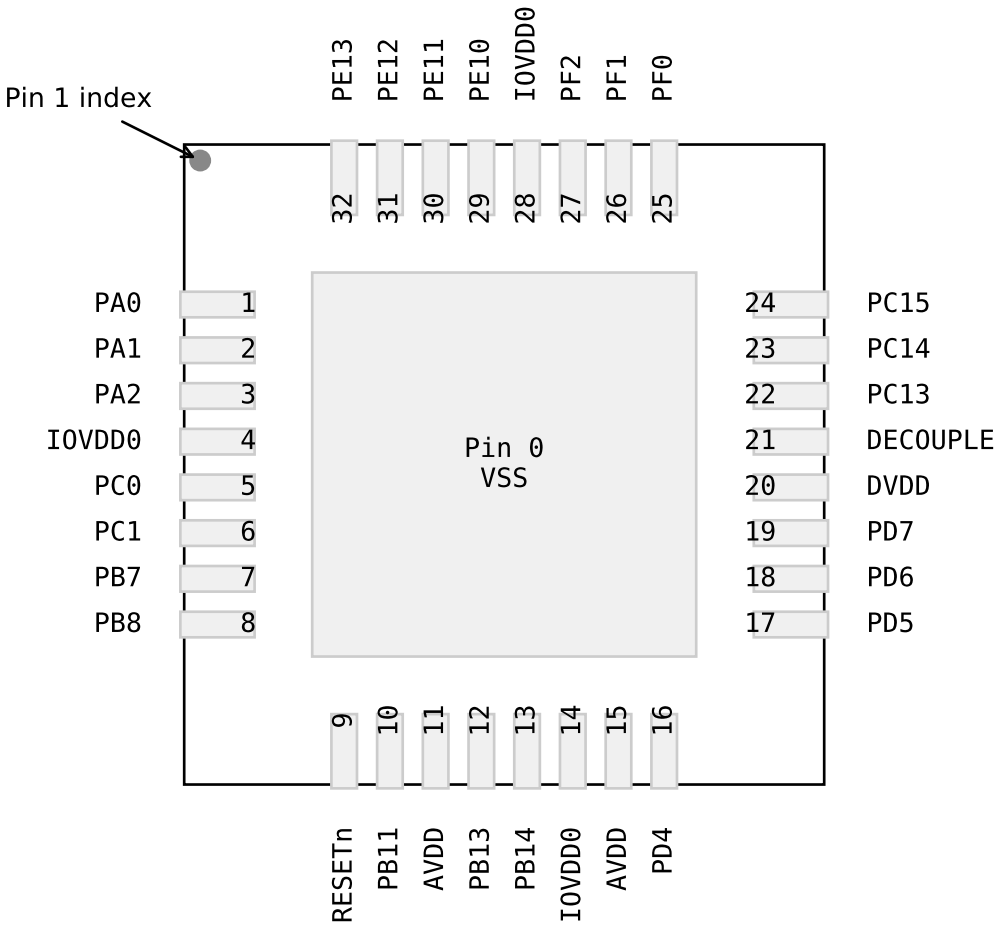

Figure 5.13. EFM32TG11B1xx in QFN32 Device Pinout

The following table provides package pin connections and general descriptions of pin functionality. For detailed information on the supported features for each GPIO pin, see 5.14 GPIO Functionality Table or 5.15 Alternate Functionality Overview.

Table 5.13. EFM32TG11B1xx in QFN32 Device Pinout

Pin Name	Pin(s)	Description	Pin Name	Pin(s)	Description
VSS	0	Ground	PA0	1	GPIO
PA1	2	GPIO	PA2	3	GPIO
IOVDD0	4 14 28	Digital IO power supply 0.	PC0	5	GPIO (5V)
PC1	6	GPIO (5V)	PB7	7	GPIO

Pin Name	Pin(s)	Description	Pin Name	Pin(s)	Description
PB8	8	GPIO	RESETn	9	Reset input, active low. To apply an external reset source to this pin, it is required to only drive this pin low during reset, and let the internal pull-up ensure that reset is released.
PB11	10	GPIO	AVDD	11 15	Analog power supply.
PB13	12	GPIO	PB14	13	GPIO
PD4	16	GPIO	PD5	17	GPIO
PD6	18	GPIO	PD7	19	GPIO
DVDD	20	Digital power supply.	DECOUPLE	21	Decouple output for on-chip voltage regulator. An external decoupling capacitor is required at this pin.
PC13	22	GPIO (5V)	PC14	23	GPIO (5V)
PC15	24	GPIO (5V)	PF0	25	GPIO (5V)
PF1	26	GPIO (5V)	PF2	27	GPIO
PE10	29	GPIO	PE11	30	GPIO
PE12	31	GPIO	PE13	32	GPIO

Note:

1. GPIO with 5V tolerance are indicated by (5V).

5.14 GPIO Functionality Table

A wide selection of alternate functionality is available for multiplexing to various pins. The following table shows the name of each GPIO pin, followed by the functionality available on that pin. Refer to 5.15 Alternate Functionality Overview for a list of GPIO locations available for each function.

Table 5.14. GPIO Functionality Table

GPIO Name	Pin Alternate Functionality / Description			
	Analog	Timers	Communication	Other
PA0	BUSBY BUSAX LCD_SEG13	TIM0_CC0 #0 TIM0_CC1 #7 PCNT0_S0IN #4	US1_RX #5 US3_TX #0 LEU0_RX #4 I2C0_SDA #0	CMU_CLK2 #0 PRS_CH0 #0 PRS_CH3 #3 GPIO_EM4WU0
PA1	BUSAY BUSBX LCD_SEG14	TIM0_CC0 #7 TIM0_CC1 #0 PCNT0_S1IN #4	US3_RX #0 I2C0_SCL #0	CMU_CLK1 #0 PRS_CH1 #0
PA2	BUSBY BUSAX LCD_SEG15	TIM0_CC2 #0	US1_RX #6 US3_CLK #0	CMU_CLK0 #0
PA3	BUSAY BUSBX LCD_SEG16	TIM0_CDTI0 #0	US3_CS #0 U0_TX #2	CMU_CLK2 #1 CMU_CLK2 #4 CMU_CLKI0 #1 LES_ALTEX2
PA4	BUSBY BUSAX LCD_SEG17	TIM0_CDTI1 #0	US3_CTS #0 U0_RX #2	LES_ALTEX3
PA5	BUSAY BUSBX LCD_SEG18	TIM0_CDTI2 #0	US3_RTS #0 U0_CTS #2	LES_ALTEX4 ACMP1_O #7
PA6	BUSBY BUSAX LCD_SEG19	WTIM0_CC0 #1	U0_RTS #2	PRS_CH6 #0 ACMP0_O #4 GPIO_EM4WU1
PA8	BU_STAT	TIM0_CC0 #6 LETIM0_OUT0 #6	US2_RX #2	
PA9	BUSAY BUSBX LCD_SEG26	TIM0_CC1 #6 LETIM0_OUT1 #6	US2_CLK #2	
PA10	BUSBY BUSAX LCD_SEG27	TIM0_CC2 #6	US2_CS #2	
PA12	BU_VOUT	WTIM0_CDTI0 #2	US0_CLK #5 US2_RTS #2	CMU_CLK0 #5 ACMP1_O #3
PA13	BUSAY BUSBX	TIM0_CC2 #7 WTIM0_CDTI1 #2	US0_CS #5 US2_TX #3	
PA14	BUSBY BUSAX LCD_BEXT	WTIM0_CDTI2 #2	US1_TX #6 US2_RX #3 US3_RTS #2	ACMP1_O #4
PA15	BUSAY BUSBX LCD_SEG12		US2_CLK #3	
PB3	BUSAY BUSBX LCD_SEG20 / LCD_COM4	TIM1_CC3 #2 WTIM0_CC0 #6	US2_TX #1 US3_TX #2	ACMP0_O #7
PB4	BUSBY BUSAX LCD_SEG21 / LCD_COM5	WTIM0_CC1 #6	US2_RX #1	
PB5	BUSAY BUSBX LCD_SEG22 / LCD_COM6	WTIM0_CC2 #6 PCNT0_S0IN #6	US0_RTS #4 US2_CLK #1	

GPIO Name	Pin Alternate Functionality / Description			
	Analog	Timers	Communication	Other
PB6	BUSBY BUSAX LCD_SEG23 / LCD_COM7	TIM0_CC0 #3 PCNT0_S1IN #6	US0_CTS #4 US2_CS #1	
PB7	LFXTAL_P	TIM0_CDTI0 #4 TIM1_CC0 #3	US0_TX #4 US1_CLK #0 US3_RX #2 U0_CTS #4	
PB8	LFXTAL_N	TIM0_CDTI1 #4 TIM1_CC1 #3	US0_RX #4 US1_CS #0 U0_RTS #4	CMU_CLKI0 #2
PB11	BUSAY BUSBX VDAC0_OUT0 / OPA0_OUT LCD_SEG28	TIM0_CDTI2 #4 TIM1_CC2 #3 LE-TIM0_OUT0 #1 PCNT0_S1IN #7	US0_CTS #5 US1_CLK #5 US2_CS #3 I2C1_SDA #1	CMU_CLK1 #5 CMU_CLKI0 #7 ACMP0_O #3 GPIO_EM4WU7
PB12	BUSBY BUSAX VDAC0_OUT1 / OPA1_OUT LCD_SEG29	TIM1_CC3 #3 LE-TIM0_OUT1 #1 PCNT0_S0IN #7	US2_CTS #1 I2C1_SCL #1	
PB13	BUSAY BUSBX HFXTAL_P	WTIM1_CC0 #0	US0_CLK #4 US1_CTS #5 LEU0_TX #1	CMU_CLKI0 #3 PRS_CH7 #0
PB14	BUSBY BUSAX HFXTAL_N	WTIM1_CC1 #0	US0_CS #4 US1_RTS #5 LEU0_RX #1	PRS_CH6 #1
PC0	VDAC0_OUT0ALT / OPA0_OUTALT #0 BU-SACMP0Y BUSACMP0X	TIM0_CC1 #3 PCNT0_S0IN #2	CAN0_RX #0 US0_TX #5 US1_TX #0 US1_CS #4 US2_RTS #0 US3_CS #3 I2C0_SDA #4	LES_CH0 PRS_CH2 #0
PC1	VDAC0_OUT0ALT / OPA0_OUTALT #1 BU-SACMP0Y BUSACMP0X	TIM0_CC2 #3 WTIM0_CC0 #7 PCNT0_S1IN #2	CAN0_TX #0 US0_RX #5 US1_TX #4 US1_RX #0 US2_CTS #0 US3_RTS #1 I2C0_SCL #4	LES_CH1 PRS_CH3 #0
PC2	VDAC0_OUT0ALT / OPA0_OUTALT #2 BU-SACMP0Y BUSACMP0X	TIM0_CDTI0 #3 WTIM0_CC1 #7	US1_RX #4 US2_TX #0	LES_CH2
PC3	VDAC0_OUT0ALT / OPA0_OUTALT #3 BU-SACMP0Y BUSACMP0X	TIM0_CDTI1 #3 WTIM0_CC2 #7	US1_CLK #4 US2_RX #0	LES_CH3
PC4	BUSACMP0Y BU-SACMP0X OPA0_P LCD_SEG24	TIM0_CC0 #5 TIM0_CDTI2 #3 LE-TIM0_OUT0 #3	US2_CLK #0 U0_TX #4 I2C1_SDA #0	LES_CH4 GPIO_EM4WU6
PC5	BUSACMP0Y BU-SACMP0X OPA0_N LCD_SEG25	TIM0_CC1 #5 LE-TIM0_OUT1 #3	US2_CS #0 U0_RX #4 I2C1_SCL #0	LES_CH5
PC6	BUSACMP0Y BU-SACMP0X OPA3_P LCD_SEG32	WTIM1_CC3 #2	US0_RTS #2 US1_CTS #3 I2C0_SDA #2	LES_CH6
PC7	BUSACMP0Y BU-SACMP0X OPA3_N LCD_SEG33	WTIM1_CC0 #3	US0_CTS #2 US1_RTS #3 I2C0_SCL #2	LES_CH7
PC8	BUSACMP1Y BU-SACMP1X LCD_SEG34		US0_CS #2	LES_CH8 PRS_CH4 #0
PC9	BUSACMP1Y BU-SACMP1X LCD_SEG35		US0_CLK #2	LES_CH9 PRS_CH5 #0 GPIO_EM4WU2

GPIO Name	Pin Alternate Functionality / Description			
	Analog	Timers	Communication	Other
PC10	BUSACMP1Y BU-SACMP1X		US0_RX #2	LES_CH10
PC11	BUSACMP1Y BU-SACMP1X		US0_TX #2 I2C1_SDA #4	LES_CH11
PC12	VDAC0_OUT1ALT / OPA1_OUTALT #0 BU-SACMP1Y BUSACMP1X	TIM1_CC3 #0	US0_RTS #3 US1_CTS #4 US2_CTS #4 U0_RTS #3	CMU_CLK0 #1 LES_CH12
PC13	VDAC0_OUT1ALT / OPA1_OUTALT #1 BU-SACMP1Y BUSACMP1X	TIM0_CDTI0 #1 TIM1_CC0 #0 TIM1_CC2 #4 PCNT0_S0IN #0	US0_CTS #3 US1_RTS #4 US2_RTS #4 U0_CTS #3	LES_CH13
PC14	VDAC0_OUT1ALT / OPA1_OUTALT #2 BU-SACMP1Y BUSACMP1X	TIM0_CDTI1 #1 TIM1_CC1 #0 TIM1_CC3 #4 LETIM0_OUT0 #5 PCNT0_S1IN #0	US0_CS #3 US1_CS #3 US2_RTS #3 US3_CS #2 U0_TX #3 LEU0_TX #5	LES_CH14 PRS_CH0 #2
PC15	VDAC0_OUT1ALT / OPA1_OUTALT #3 BU-SACMP1Y BUSACMP1X	TIM0_CDTI2 #1 TIM1_CC2 #0 WTIM0_CC0 #4 LE-TIM0_OUT1 #5	US0_CLK #3 US1_CLK #3 US3_RTS #3 U0_RX #3 LEU0_RX #5	LES_CH15 PRS_CH1 #2
PD0	VDAC0_OUT0ALT / OPA0_OUTALT #4 OPA2_OUTALT BU-SADC0Y BUSADC0X	WTIM1_CC2 #0	CAN0_RX #2 US1_TX #1	
PD1	VDAC0_OUT1ALT / OPA1_OUTALT #4 BU-SADC0Y BUSADC0X OPA3_OUT	TIM0_CC0 #2 WTIM1_CC3 #0	CAN0_TX #2 US1_RX #1	
PD2	BUSADC0Y BUSADC0X	TIM0_CC1 #2 WTIM1_CC0 #1	US1_CLK #1	
PD3	BUSADC0Y BUSADC0X OPA2_N LCD_SEG30	TIM0_CC2 #2 WTIM1_CC1 #1	US1_CS #1	
PD4	BUSADC0Y BUSADC0X OPA2_P LCD_SEG31	WTIM0_CDTI0 #4 WTIM1_CC2 #1	US1_CTS #1 US3_CLK #2 LEU0_TX #0 I2C1_SDA #3	CMU_CLKI0 #0
PD5	BUSADC0Y BUSADC0X OPA2_OUT	WTIM0_CDTI1 #4 WTIM1_CC3 #1	US1_RTS #1 U0_CTS #5 LEU0_RX #0 I2C1_SCL #3	
PD6	BUSADC0Y BUSADC0X ADC0_EXTP VDAC0_EXT OPA1_P	TIM1_CC0 #4 WTIM0_CDTI2 #4 WTIM1_CC0 #2 LE-TIM0_OUT0 #0 PCNT0_S0IN #3	US0_RTS #5 US1_RX #2 US2_CTS #5 US3_CTS #2 U0_RTS #5 I2C0_SDA #1	CMU_CLK2 #2 LES_AL-TEX0 PRS_CH5 #2 ACMP0_O #2
PD7	BUSADC0Y BUSADC0X ADC0_EXTN OPA1_N	TIM1_CC1 #4 WTIM1_CC1 #2 LE-TIM0_OUT1 #0 PCNT0_S1IN #3	US1_TX #2 US3_CLK #1 U0_TX #6 I2C0_SCL #1	CMU_CLK0 #2 LES_AL-TEX1 ACMP1_O #2
PD8	BU_VIN	WTIM1_CC2 #2	US2_RTS #5	CMU_CLK1 #1
PE4	BUSDY BUSCX LCD_COM0	WTIM0_CC0 #0 WTIM1_CC1 #4	US0_CS #1 US1_CS #5 US3_CS #1 U0_RX #6 I2C0_SDA #7	

GPIO Name	Pin Alternate Functionality / Description			
	Analog	Timers	Communication	Other
PE5	BUSCY BUSDX LCD_COM1	WTIM0_CC1 #0 WTIM1_CC2 #4	US0_CLK #1 US1_CLK #6 US3_CTS #1 I2C0_SCL #7	
PE6	BUSDY BUSCX LCD_COM2	WTIM0_CC2 #0 WTIM1_CC3 #4	US0_RX #1 US3_TX #1	PRS_CH6 #2
PE7	BUSCY BUSDX LCD_COM3	WTIM1_CC0 #5	US0_TX #1 US3_RX #1	PRS_CH7 #2
PE8	BUSDY BUSCX LCD_SEG4			PRS_CH3 #1
PE9	BUSCY BUSDX LCD_SEG5			
PE10	BUSDY BUSCX LCD_SEG6	TIM1_CC0 #1 WTIM0_CDTI0 #0	US0_TX #0	PRS_CH2 #2 GPIO_EM4WU9
PE11	BUSCY BUSDX LCD_SEG7	TIM1_CC1 #1 WTIM0_CDTI1 #0	US0_RX #0	LES_ALTEX5 PRS_CH3 #2
PE12	BUSDY BUSCX LCD_SEG8	TIM1_CC2 #1 WTIM0_CDTI2 #0 LE-TIM0_OUT0 #4	US0_RX #3 US0_CLK #0 I2C0_SDA #6	CMU_CLK1 #2 CMU_CLKI0 #6 LES_AL-TEX6 PRS_CH1 #3
PE13	BUSCY BUSDX LCD_SEG9	TIM1_CC3 #1 LE-TIM0_OUT1 #4	US0_TX #3 US0_CS #0 I2C0_SCL #6	LES_ALTEX7 PRS_CH2 #3 ACMP0_O #0 GPIO_EM4WU5
PE14	BUSDY BUSCX LCD_SEG10		US0_CTS #0 LEU0_TX #2	
PE15	BUSCY BUSDX LCD_SEG11		US0_RTS #0 LEU0_RX #2	
PF0	BUSDY BUSCX	TIM0_CC0 #4 WTIM0_CC1 #4 LE-TIM0_OUT0 #2	CAN0_RX #1 US1_CLK #2 US2_TX #5 LEU0_TX #3 I2C0_SDA #5	DBG_SWCLKTCK BOOT_TX
PF1	BUSCY BUSDX	TIM0_CC1 #4 WTIM0_CC2 #4 LE-TIM0_OUT1 #2	US1_CS #2 US2_RX #5 U0_TX #5 LEU0_RX #3 I2C0_SCL #5	PRS_CH4 #2 DBG_SWDIOTMS GPIO_EM4WU3 BOOT_RX
PF2	BUSDY BUSCX LCD_SEG0	TIM0_CC2 #4 TIM1_CC0 #5	CAN0_TX #1 US1_TX #5 US2_CLK #5 U0_RX #5 LEU0_TX #4 I2C1_SCL #4	CMU_CLK0 #4 PRS_CH0 #3 ACMP1_O #0 DBG_TDO GPIO_EM4WU4
PF3	BUSCY BUSDX LCD_SEG1	TIM0_CDTI0 #2 TIM1_CC1 #5	US1_CTS #2	CMU_CLK1 #4 PRS_CH0 #1
PF4	BUSDY BUSCX LCD_SEG2	TIM0_CDTI1 #2 TIM1_CC2 #5	US1_RTS #2	PRS_CH1 #1
PF5	BUSCY BUSDX LCD_SEG3	TIM0_CDTI2 #2 TIM1_CC3 #6	US2_CS #5	PRS_CH2 #1 DBG_TDI

5.15 Alternate Functionality Overview

A wide selection of alternate functionality is available for multiplexing to various pins. The following table shows the name of the alternate functionality in the first column, followed by columns showing the possible LOCATION bitfield settings and the associated GPIO pin. Refer to 5.14 GPIO Functionality Table for a list of functions available on each GPIO pin.

Note: Some functionality, such as analog interfaces, do not have alternate settings or a LOCATION bitfield. In these cases, the pinout is shown in the column corresponding to LOCATION 0.

Table 5.15. Alternate Functionality Overview

Alternate	LOCATION		
Functionality	**0 - 3**	**4 - 7**	**Description**
ACMP0_O	0: PE13 2: PD6 3: PB11	4: PA6 7: PB3	Analog comparator ACMP0, digital output.
ACMP1_O	0: PF2 2: PD7 3: PA12	4: PA14 7: PA5	Analog comparator ACMP1, digital output.
ADC0_EXTN	0: PD7		Analog to digital converter ADC0 external reference input negative pin.
ADC0_EXTP	0: PD6		Analog to digital converter ADC0 external reference input positive pin.
BOOT_RX	0: PF1		Bootloader RX.
BOOT_TX	0: PF0		Bootloader TX.
BU_STAT	0: PA8		Backup Power Domain status, whether or not the system is in backup mode.
BU_VIN	0: PD8		Battery input for Backup Power Domain.
BU_VOUT	0: PA12		Power output for Backup Power Domain.
CAN0_RX	0: PC0 1: PF0 2: PD0		CAN0 RX.
CAN0_TX	0: PC1 1: PF2 2: PD1		CAN0 TX.
CMU_CLK0	0: PA2 1: PC12 2: PD7	4: PF2 5: PA12	Clock Management Unit, clock output number 0.
CMU_CLK1	0: PA1 1: PD8 2: PE12	4: PF3 5: PB11	Clock Management Unit, clock output number 1.
CMU_CLK2	0: PA0 1: PA3 2: PD6	4: PA3	Clock Management Unit, clock output number 2.

Alternate	LOCATION		
Functionality	**0 - 3**	**4 - 7**	**Description**
CMU_CLKI0	0: PD4 1: PA3 2: PB8 3: PB13	6: PE12 7: PB11	Clock Management Unit, clock input number 0.
DBG_SWCLKTCK	0: PF0		Debug-interface Serial Wire clock input and JTAG Test Clock. Note that this function is enabled to the pin out of reset, and has a built-in pull down.
DBG_SWDIOTMS	0: PF1		Debug-interface Serial Wire data input / output and JTAG Test Mode Select. Note that this function is enabled to the pin out of reset, and has a built-in pull up.
DBG_TDI	0: PF5		Debug-interface JTAG Test Data In. Note that this function becomes available after the first valid JTAG command is received, and has a built-in pull up when JTAG is active.
DBG_TDO	0: PF2		Debug-interface JTAG Test Data Out. Note that this function becomes available after the first valid JTAG command is received.
GPIO_EM4WU0	0: PA0		Pin can be used to wake the system up from EM4
GPIO_EM4WU1	0: PA6		Pin can be used to wake the system up from EM4
GPIO_EM4WU2	0: PC9		Pin can be used to wake the system up from EM4
GPIO_EM4WU3	0: PF1		Pin can be used to wake the system up from EM4
GPIO_EM4WU4	0: PF2		Pin can be used to wake the system up from EM4
GPIO_EM4WU5	0: PE13		Pin can be used to wake the system up from EM4
GPIO_EM4WU6	0: PC4		Pin can be used to wake the system up from EM4
GPIO_EM4WU7	0: PB11		Pin can be used to wake the system up from EM4
GPIO_EM4WU9	0: PE10		Pin can be used to wake the system up from EM4
HFXTAL_N	0: PB14		High Frequency Crystal negative pin. Also used as external optional clock input pin.
HFXTAL_P	0: PB13		High Frequency Crystal positive pin.
I2C0_SCL	0: PA1 1: PD7 2: PC7	4: PC1 5: PF1 6: PE13 7: PE5	I2C0 Serial Clock Line input / output.
I2C0_SDA	0: PA0 1: PD6 2: PC6	4: PC0 5: PF0 6: PE12 7: PE4	I2C0 Serial Data input / output.
I2C1_SCL	0: PC5 1: PB12 3: PD5	4: PF2	I2C1 Serial Clock Line input / output.

Alternate	LOCATION		
Functionality	**0 - 3**	**4 - 7**	**Description**
I2C1_SDA	0: PC4 1: PB11 3: PD4	4: PC11	I2C1 Serial Data input / output.
LCD_BEXT	0: PA14		LCD external supply bypass in step down or charge pump mode. If using the LCD in step-down or charge pump mode, a 1 uF (minimum) capacitor between this pin and VSS is required. To reduce supply ripple, a larger capcitor of approximately 1000 times the total LCD segment capacitance may be used. If using the LCD with the internal supply source, this pin may be left unconnected or used as a GPIO.
LCD_COM0	0: PE4		LCD driver common line number 0.
LCD_COM1	0: PE5		LCD driver common line number 1.
LCD_COM2	0: PE6		LCD driver common line number 2.
LCD_COM3	0: PE7		LCD driver common line number 3.
LCD_SEG0	0: PF2		LCD segment line 0.
LCD_SEG1	0: PF3		LCD segment line 1.
LCD_SEG2	0: PF4		LCD segment line 2.
LCD_SEG3	0: PF5		LCD segment line 3.
LCD_SEG4	0: PE8		LCD segment line 4.
LCD_SEG5	0: PE9		LCD segment line 5.
LCD_SEG6	0: PE10		LCD segment line 6.
LCD_SEG7	0: PE11		LCD segment line 7.
LCD_SEG8	0: PE12		LCD segment line 8.
LCD_SEG9	0: PE13		LCD segment line 9.
LCD_SEG10	0: PE14		LCD segment line 10.
LCD_SEG11	0: PE15		LCD segment line 11.
LCD_SEG12	0: PA15		LCD segment line 12.
LCD_SEG13	0: PA0		LCD segment line 13.
LCD_SEG14	0: PA1		LCD segment line 14.
LCD_SEG15	0: PA2		LCD segment line 15.
LCD_SEG16	0: PA3		LCD segment line 16.
LCD_SEG17	0: PA4		LCD segment line 17.
LCD_SEG18	0: PA5		LCD segment line 18.
LCD_SEG19	0: PA6		LCD segment line 19.
LCD_SEG20 / LCD_COM4	0: PB3		LCD segment line 20. This pin may also be used as LCD COM line 4
LCD_SEG21 / LCD_COM5	0: PB4		LCD segment line 21. This pin may also be used as LCD COM line 5

Alternate	LOCATION		
Functionality	0 - 3	4 - 7	Description
LCD_SEG22 / LCD_COM6	0: PB5		LCD segment line 22. This pin may also be used as LCD COM line 6
LCD_SEG23 / LCD_COM7	0: PB6		LCD segment line 23. This pin may also be used as LCD COM line 7
LCD_SEG24	0: PC4		LCD segment line 24.
LCD_SEG25	0: PC5		LCD segment line 25.
LCD_SEG26	0: PA9		LCD segment line 26.
LCD_SEG27	0: PA10		LCD segment line 27.
LCD_SEG28	0: PB11		LCD segment line 28.
LCD_SEG29	0: PB12		LCD segment line 29.
LCD_SEG30	0: PD3		LCD segment line 30.
LCD_SEG31	0: PD4		LCD segment line 31.
LCD_SEG32	0: PC6		LCD segment line 32.
LCD_SEG33	0: PC7		LCD segment line 33.
LCD_SEG34	0: PC8		LCD segment line 34.
LCD_SEG35	0: PC9		LCD segment line 35.
LES_ALTEX0	0: PD6		LESENSE alternate excite output 0.
LES_ALTEX1	0: PD7		LESENSE alternate excite output 1.
LES_ALTEX2	0: PA3		LESENSE alternate excite output 2.
LES_ALTEX3	0: PA4		LESENSE alternate excite output 3.
LES_ALTEX4	0: PA5		LESENSE alternate excite output 4.
LES_ALTEX5	0: PE11		LESENSE alternate excite output 5.
LES_ALTEX6	0: PE12		LESENSE alternate excite output 6.
LES_ALTEX7	0: PE13		LESENSE alternate excite output 7.
LES_CH0	0: PC0		LESENSE channel 0.
LES_CH1	0: PC1		LESENSE channel 1.
LES_CH2	0: PC2		LESENSE channel 2.
LES_CH3	0: PC3		LESENSE channel 3.
LES_CH4	0: PC4		LESENSE channel 4.
LES_CH5	0: PC5		LESENSE channel 5.
LES_CH6	0: PC6		LESENSE channel 6.
LES_CH7	0: PC7		LESENSE channel 7.
LES_CH8	0: PC8		LESENSE channel 8.
LES_CH9	0: PC9		LESENSE channel 9.
LES_CH10	0: PC10		LESENSE channel 10.
LES_CH11	0: PC11		LESENSE channel 11.
LES_CH12	0: PC12		LESENSE channel 12.

Alternate	LOCATION		
Functionality	0 - 3	4 - 7	Description
LES_CH13	0: PC13		LESENSE channel 13.
LES_CH14	0: PC14		LESENSE channel 14.
LES_CH15	0: PC15		LESENSE channel 15.
LETIM0_OUT0	0: PD6 1: PB11 2: PF0 3: PC4	4: PE12 5: PC14 6: PA8	Low Energy Timer LETIM0, output channel 0.
LETIM0_OUT1	0: PD7 1: PB12 2: PF1 3: PC5	4: PE13 5: PC15 6: PA9	Low Energy Timer LETIM0, output channel 1.
LEU0_RX	0: PD5 1: PB14 2: PE15 3: PF1	4: PA0 5: PC15	LEUART0 Receive input.
LEU0_TX	0: PD4 1: PB13 2: PE14 3: PF0	4: PF2 5: PC14	LEUART0 Transmit output. Also used as receive input in half duplex communication.
LFXTAL_N	0: PB8		Low Frequency Crystal (typically 32.768 kHz) negative pin. Also used as an optional external clock input pin.
LFXTAL_P	0: PB7		Low Frequency Crystal (typically 32.768 kHz) positive pin.
OPA0_N	0: PC5		Operational Amplifier 0 external negative input.
OPA0_P	0: PC4		Operational Amplifier 0 external positive input.
OPA1_N	0: PD7		Operational Amplifier 1 external negative input.
OPA1_P	0: PD6		Operational Amplifier 1 external positive input.
OPA2_N	0: PD3		Operational Amplifier 2 external negative input.
OPA2_OUT	0: PD5		Operational Amplifier 2 output.
OPA2_OUTALT	0: PD0		Operational Amplifier 2 alternative output.
OPA2_P	0: PD4		Operational Amplifier 2 external positive input.
OPA3_N	0: PC7		Operational Amplifier 3 external negative input.
OPA3_OUT	0: PD1		Operational Amplifier 3 output.
OPA3_P	0: PC6		Operational Amplifier 3 external positive input.
PCNT0_S0IN	0: PC13 2: PC0 3: PD6	4: PA0 6: PB5 7: PB12	Pulse Counter PCNT0 input number 0.

Alternate	LOCATION		
Functionality	0 - 3	4 - 7	Description
PCNT0_S1IN	0: PC14 2: PC1 3: PD7	4: PA1 6: PB6 7: PB11	Pulse Counter PCNT0 input number 1.
PRS_CH0	0: PA0 1: PF3 2: PC14 3: PF2		Peripheral Reflex System PRS, channel 0.
PRS_CH1	0: PA1 1: PF4 2: PC15 3: PE12		Peripheral Reflex System PRS, channel 1.
PRS_CH2	0: PC0 1: PF5 2: PE10 3: PE13		Peripheral Reflex System PRS, channel 2.
PRS_CH3	0: PC1 1: PE8 2: PE11 3: PA0		Peripheral Reflex System PRS, channel 3.
PRS_CH4	0: PC8 2: PF1		Peripheral Reflex System PRS, channel 4.
PRS_CH5	0: PC9 2: PD6		Peripheral Reflex System PRS, channel 5.
PRS_CH6	0: PA6 1: PB14 2: PE6		Peripheral Reflex System PRS, channel 6.
PRS_CH7	0: PB13 2: PE7		Peripheral Reflex System PRS, channel 7.
TIM0_CC0	0: PA0 2: PD1 3: PB6	4: PF0 5: PC4 6: PA8 7: PA1	Timer 0 Capture Compare input / output channel 0.
TIM0_CC1	0: PA1 2: PD2 3: PC0	4: PF1 5: PC5 6: PA9 7: PA0	Timer 0 Capture Compare input / output channel 1.

Alternate	LOCATION		
Functionality	0 - 3	4 - 7	Description
TIM0_CC2	0: PA2 2: PD3 3: PC1	4: PF2 6: PA10 7: PA13	Timer 0 Capture Compare input / output channel 2.
TIM0_CDTI0	0: PA3 1: PC13 2: PF3 3: PC2	4: PB7	Timer 0 Complimentary Dead Time Insertion channel 0.
TIM0_CDTI1	0: PA4 1: PC14 2: PF4 3: PC3	4: PB8	Timer 0 Complimentary Dead Time Insertion channel 1.
TIM0_CDTI2	0: PA5 1: PC15 2: PF5 3: PC4	4: PB11	Timer 0 Complimentary Dead Time Insertion channel 2.
TIM1_CC0	0: PC13 1: PE10 3: PB7	4: PD6 5: PF2	Timer 1 Capture Compare input / output channel 0.
TIM1_CC1	0: PC14 1: PE11 3: PB8	4: PD7 5: PF3	Timer 1 Capture Compare input / output channel 1.
TIM1_CC2	0: PC15 1: PE12 3: PB11	4: PC13 5: PF4	Timer 1 Capture Compare input / output channel 2.
TIM1_CC3	0: PC12 1: PE13 2: PB3 3: PB12	4: PC14 6: PF5	Timer 1 Capture Compare input / output channel 3.
U0_CTS	2: PA5 3: PC13	4: PB7 5: PD5	UART0 Clear To Send hardware flow control input.
U0_RTS	2: PA6 3: PC12	4: PB8 5: PD6	UART0 Request To Send hardware flow control output.
U0_RX	2: PA4 3: PC15	4: PC5 5: PF2 6: PE4	UART0 Receive input.

Alternate	LOCATION		
Functionality	0 - 3	4 - 7	Description
U0_TX	2: PA3 3: PC14	4: PC4 5: PF1 6: PD7	UART0 Transmit output. Also used as receive input in half duplex communication.
US0_CLK	0: PE12 1: PE5 2: PC9 3: PC15	4: PB13 5: PA12	USART0 clock input / output.
US0_CS	0: PE13 1: PE4 2: PC8 3: PC14	4: PB14 5: PA13	USART0 chip select input / output.
US0_CTS	0: PE14 2: PC7 3: PC13	4: PB6 5: PB11	USART0 Clear To Send hardware flow control input.
US0_RTS	0: PE15 2: PC6 3: PC12	4: PB5 5: PD6	USART0 Request To Send hardware flow control output.
US0_RX	0: PE11 1: PE6 2: PC10 3: PE12	4: PB8 5: PC1	USART0 Asynchronous Receive. USART0 Synchronous mode Master Input / Slave Output (MISO).
US0_TX	0: PE10 1: PE7 2: PC11 3: PE13	4: PB7 5: PC0	USART0 Asynchronous Transmit. Also used as receive input in half duplex communication. USART0 Synchronous mode Master Output / Slave Input (MOSI).
US1_CLK	0: PB7 1: PD2 2: PF0 3: PC15	4: PC3 5: PB11 6: PE5	USART1 clock input / output.
US1_CS	0: PB8 1: PD3 2: PF1 3: PC14	4: PC0 5: PE4	USART1 chip select input / output.
US1_CTS	1: PD4 2: PF3 3: PC6	4: PC12 5: PB13	USART1 Clear To Send hardware flow control input.

Alternate	LOCATION		
Functionality	0 - 3	4 - 7	Description
US1_RTS	1: PD5 2: PF4 3: PC7	4: PC13 5: PB14	USART1 Request To Send hardware flow control output.
US1_RX	0: PC1 1: PD1 2: PD6	4: PC2 5: PA0 6: PA2	USART1 Asynchronous Receive. USART1 Synchronous mode Master Input / Slave Output (MISO).
US1_TX	0: PC0 1: PD0 2: PD7	4: PC1 5: PF2 6: PA14	USART1 Asynchronous Transmit. Also used as receive input in half duplex communication. USART1 Synchronous mode Master Output / Slave Input (MOSI).
US2_CLK	0: PC4 1: PB5 2: PA9 3: PA15	5: PF2	USART2 clock input / output.
US2_CS	0: PC5 1: PB6 2: PA10 3: PB11	5: PF5	USART2 chip select input / output.
US2_CTS	0: PC1 1: PB12	4: PC12 5: PD6	USART2 Clear To Send hardware flow control input.
US2_RTS	0: PC0 2: PA12 3: PC14	4: PC13 5: PD8	USART2 Request To Send hardware flow control output.
US2_RX	0: PC3 1: PB4 2: PA8 3: PA14	5: PF1	USART2 Asynchronous Receive. USART2 Synchronous mode Master Input / Slave Output (MISO).
US2_TX	0: PC2 1: PB3 3: PA13	5: PF0	USART2 Asynchronous Transmit. Also used as receive input in half duplex communication. USART2 Synchronous mode Master Output / Slave Input (MOSI).
US3_CLK	0: PA2 1: PD7 2: PD4		USART3 clock input / output.
US3_CS	0: PA3 1: PE4 2: PC14 3: PC0		USART3 chip select input / output.

Alternate	LOCATION		
Functionality	0 - 3	4 - 7	Description
US3_CTS	0: PA4 1: PE5 2: PD6		USART3 Clear To Send hardware flow control input.
US3_RTS	0: PA5 1: PC1 2: PA14 3: PC15		USART3 Request To Send hardware flow control output.
US3_RX	0: PA1 1: PE7 2: PB7		USART3 Asynchronous Receive. USART3 Synchronous mode Master Input / Slave Output (MISO).
US3_TX	0: PA0 1: PE6 2: PB3		USART3 Asynchronous Transmit. Also used as receive input in half duplex communication. USART3 Synchronous mode Master Output / Slave Input (MOSI).
VDAC0_EXT	0: PD6		Digital to analog converter VDAC0 external reference input pin.
VDAC0_OUT0 / OPA0_OUT	0: PB11		Digital to Analog Converter DAC0 output channel number 0.
VDAC0_OUT0ALT / OPA0_OUTALT	0: PC0 1: PC1 2: PC2 3: PC3	4: PD0	Digital to Analog Converter DAC0 alternative output for channel 0.
VDAC0_OUT1 / OPA1_OUT	0: PB12		Digital to Analog Converter DAC0 output channel number 1.
VDAC0_OUT1ALT / OPA1_OUTALT	0: PC12 1: PC13 2: PC14 3: PC15	4: PD1	Digital to Analog Converter DAC0 alternative output for channel 1.
WTIM0_CC0	0: PE4 1: PA6	4: PC15 6: PB3 7: PC1	Wide timer 0 Capture Compare input / output channel 0.
WTIM0_CC1	0: PE5	4: PF0 6: PB4 7: PC2	Wide timer 0 Capture Compare input / output channel 1.
WTIM0_CC2	0: PE6	4: PF1 6: PB5 7: PC3	Wide timer 0 Capture Compare input / output channel 2.

Alternate	LOCATION		
Functionality	**0 - 3**	**4 - 7**	**Description**
WTIM0_CDTI0	0: PE10 2: PA12	4: PD4	Wide timer 0 Complimentary Dead Time Insertion channel 0.
WTIM0_CDTI1	0: PE11 2: PA13	4: PD5	Wide timer 0 Complimentary Dead Time Insertion channel 1.
WTIM0_CDTI2	0: PE12 2: PA14	4: PD6	Wide timer 0 Complimentary Dead Time Insertion channel 2.
WTIM1_CC0	0: PB13 1: PD2 2: PD6 3: PC7	5: PE7	Wide timer 1 Capture Compare input / output channel 0.
WTIM1_CC1	0: PB14 1: PD3 2: PD7	4: PE4	Wide timer 1 Capture Compare input / output channel 1.
WTIM1_CC2	0: PD0 1: PD4 2: PD8	4: PE5	Wide timer 1 Capture Compare input / output channel 2.
WTIM1_CC3	0: PD1 1: PD5 2: PC6	4: PE6	Wide timer 1 Capture Compare input / output channel 3.

5.16 Analog Port (APORT) Client Maps

The Analog Port (APORT) is an infrastructure used to connect chip pins with on-chip analog clients such as analog comparators, ADCs, DACs, etc. The APORT consists of a set of shared buses, switches, and control logic needed to configurably implement the signal routing. Figure 5.14 APORT Connection Diagram on page 115 shows the APORT routing for this device family (note that available features may vary by part number). A complete description of APORT functionality can be found in the Reference Manual.

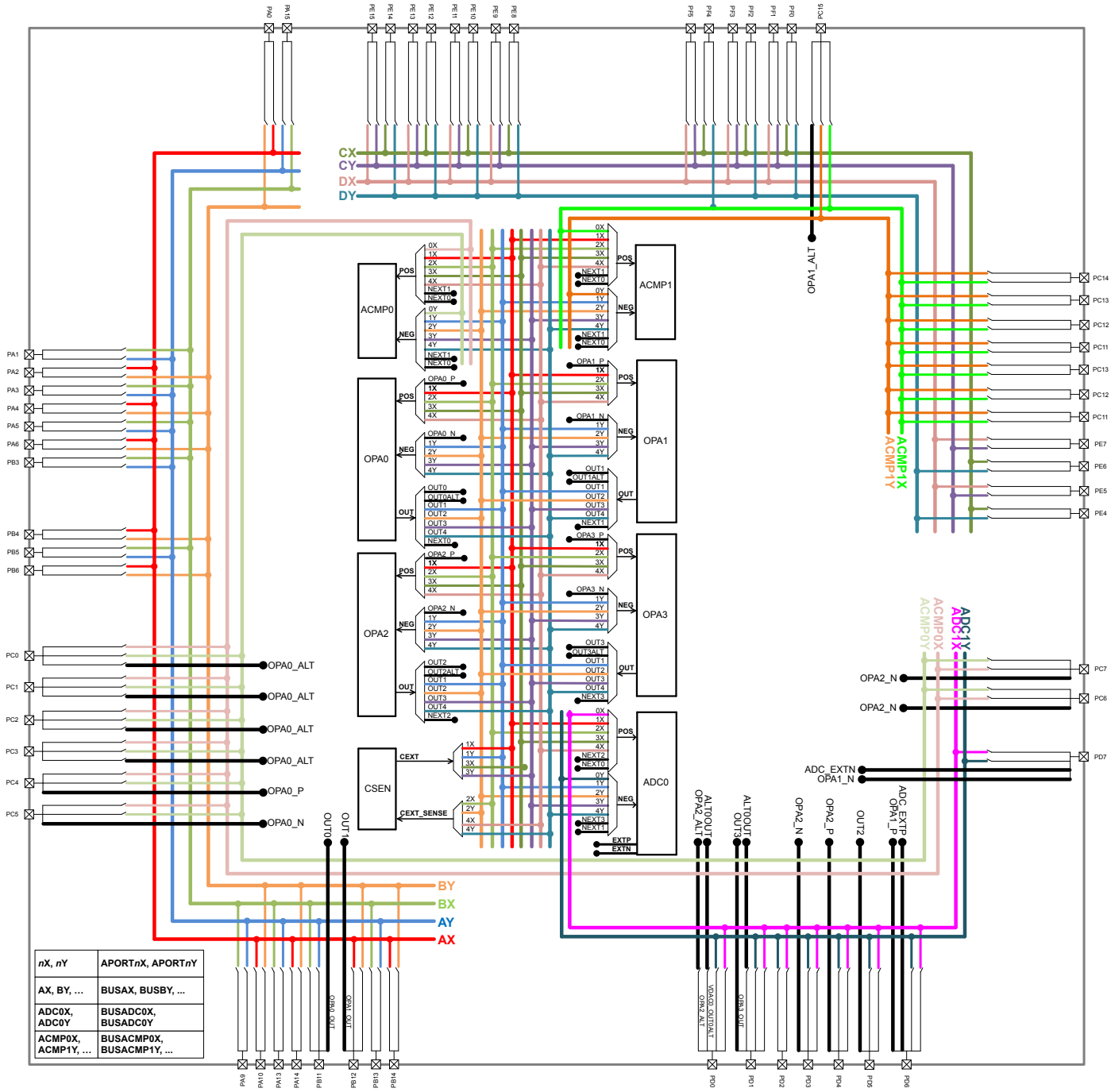

Figure 5.14. APORT Connection Diagram

Client maps for each analog circuit using the APORT are shown in the following tables. The maps are organized by bus, and show the peripheral's port connection, the shared bus, and the connection from specific bus channel numbers to GPIO pins.

In general, enumerations for the pin selection field in an analog peripheral's register can be determined by finding the desired pin connection in the table and then combining the value in the Port column (APORT__), and the channel identifier (CH__). For example, if pin

PF7 is available on port APORT2X as CH23, the register field enumeration to connect to PF7 would be APORT2XCH23. The shared bus used by this connection is indicated in the Bus column.

Table 5.16. ACMP0 Bus and Pin Mapping

Port	APORT4Y	APORT4X	APORT3Y	APORT3X	APORT2Y	APORT2X	APORT1Y	APORT1X	APORT0Y	APORT0X
Bus	BUSDY	BUSDX	BUSCY	BUSCX	BUSBY	BUSBX	BUSAY	BUSAX	BUSACMP0Y	BUSACMP0X
CH31										
CH30					PB14			PB14		
CH29						PB13	PB13			
CH28					PB12			PB12		
CH27						PB11	PB11			
CH26										
CH25										
CH24										
CH23										
CH22					PB6			PB6		
CH21		PF5	PF5			PB5	PB5			
CH20	PF4			PF4	PB4			PB4		
CH19		PF3	PF3			PB3	PB3			
CH18	PF2			PF2						
CH17		PF1	PF1							
CH16	PF0			PF0						
CH15		PE15	PE15			PA15	PA15			
CH14	PE14			PE14	PA14			PA14		
CH13		PE13	PE13			PA13	PA13			
CH12	PE12			PE12						
CH11		PE11	PE11							
CH10	PE10			PE10	PA10			PA10		
CH9		PE9	PE9			PA9	PA9			
CH8	PE8			PE8						
CH7		PE7	PE7						PC7	PC7
CH6	PE6			PE6	PA6			PA6	PC6	PC6
CH5		PE5	PE5			PA5	PA5		PC5	PC5
CH4	PE4			PE4	PA4			PA4	PC4	PC4
CH3						PA3	PA3		PC3	PC3
CH2					PA2			PA2	PC2	PC2
CH1						PA1	PA1		PC1	PC1
CH0					PA0			PA0	PC0	PC0

Table 5.17. ACMP1 Bus and Pin Mapping

APORT4Y	APORT4X	APORT3Y	APORT3X	APORT2Y	APORT2X	APORT1Y	APORT1X	APORT0Y	APORT0X	Port
BUSDY	BUSDX	BUSCY	BUSCX	BUSBY	BUSBX	BUSAY	BUSAX	BUSACMP1Y	BUSACMP1X	Bus
										CH31
				PB14			PB14			CH30
					PB13	PB13				CH29
				PB12			PB12			CH28
					PB11	PB11				CH27
										CH26
										CH25
										CH24
										CH23
				PB6			PB6			CH22
	PF5	PF5			PB5	PB5				CH21
PF4			PF4	PB4			PB4			CH20
	PF3	PF3			PB3	PB3				CH19
PF2			PF2							CH18
	PF1	PF1								CH17
PF0			PF0							CH16
	PE15	PE15			PA15	PA15				CH15
PE14			PE14	PA14			PA14			CH14
	PE13	PE13			PA13	PA13				CH13
PE12			PE12							CH12
	PE11	PE11								CH11
PE10			PE10	PA10			PA10			CH10
	PE9	PE9			PA9	PA9				CH9
PE8			PE8							CH8
	PE7	PE7						PC15	PC15	CH7
PE6			PE6	PA6			PA6	PC14	PC14	CH6
	PE5	PE5			PA5	PA5		PC13	PC13	CH5
PE4			PE4	PA4			PA4	PC12	PC12	CH4
					PA3	PA3		PC11	PC11	CH3
				PA2			PA2	PC10	PC10	CH2
					PA1	PA1		PC9	PC9	CH1
				PA0			PA0	PC8	PC8	CH0

Table 5.18. ADC0 Bus and Pin Mapping

APORT4Y	APORT4X	APORT3Y	APORT3X	APORT2Y	APORT2X	APORT1Y	APORT1X	APORT0Y	APORT0X	Port
BUSDY	BUSDX	BUSCY	BUSCX	BUSBY	BUSBX	BUSAY	BUSAX	BUSADC0Y	BUSADC0X	Bus
										CH31
				PB14			PB14			CH30
					PB13	PB13				CH29
				PB12			PB12			CH28
					PB11	PB11				CH27
										CH26
										CH25
										CH24
										CH23
				PB6			PB6			CH22
	PF5	PF5			PB5	PB5				CH21
PF4			PF4	PB4			PB4			CH20
	PF3	PF3			PB3	PB3				CH19
PF2			PF2							CH18
	PF1	PF1								CH17
PF0			PF0							CH16
	PE15	PE15			PA15	PA15				CH15
PE14			PE14	PA14			PA14			CH14
	PE13	PE13			PA13	PA13				CH13
PE12			PE12							CH12
	PE11	PE11								CH11
PE10			PE10	PA10			PA10			CH10
	PE9	PE9			PA9	PA9				CH9
PE8			PE8							CH8
	PE7	PE7						PD7	PD7	CH7
PE6			PE6	PA6			PA6	PD6	PD6	CH6
	PE5	PE5			PA5	PA5		PD5	PD5	CH5
PE4			PE4	PA4			PA4	PD4	PD4	CH4
					PA3	PA3		PD3	PD3	CH3
				PA2			PA2	PD2	PD2	CH2
					PA1	PA1		PD1	PD1	CH1
				PA0			PA0	PD0	PD0	CH0

Table 5.19. CSEN Bus and Pin Mapping

Port	Bus	CH31	CH30	CH29	CH28	CH27	CH26	CH25	CH24	CH23	CH22	CH21	CH20	CH19	CH18	CH17	CH16	CH15	CH14	CH13	CH12	CH11	CH10	CH9	CH8	CH7	CH6	CH5	CH4	CH3	CH2	CH1	CH0
CEXT																																	
APORT1X	BUSAX		PB14		PB12						PB6		PB4						PA14				PA10				PA6		PA4		PA2		PA0
APORT1Y	BUSAY			PB13		PB11						PB5		PB3				PA15		PA13				PA9				PA5		PA3		PA1	
APORT3X	BUSCX												PF4		PF2		PF0		PE14		PE12		PE10		PE8		PE6		PE4				
APORT3Y	BUSCY											PF5		PF3		PF1		PE15		PE13		PE11		PE9		PE7		PE5					
CEXT_SENSE																																	
APORT2X	BUSBX			PB13		PB11						PB5		PB3				PA15		PA13				PA9				PA5		PA3		PA1	
APORT2Y	BUSBY		PB14		PB12						PB6		PB4						PA14				PA10				PA6		PA4		PA2		PA0
APORT4X	BUSDX											PF5		PF3		PF1		PE15		PE13		PE11		PE9		PE7		PE5					
APORT4Y	BUSDY												PF4		PF2		PF0		PE14		PE12		PE10		PE8		PE6		PE4				

Table 5.20. VDAC0 / OPA Bus and Pin Mapping

Port	Bus	CH31	CH30	CH29	CH28	CH27	CH26	CH25	CH24	CH23	CH22	CH21	CH20	CH19	CH18	CH17	CH16	CH15	CH14	CH13	CH12	CH11	CH10	CH9	CH8	CH7	CH6	CH5	CH4	CH3	CH2	CH1	CH0
OPA0_N																																	
APORT1Y	BUSAY			PB13		PB11						PB5		PB3				PA15		PA13				PA9				PA5		PA3		PA1	
APORT2Y	BUSBY		PB14		PB12						PB6		PB4						PA14				PA10				PA6		PA4		PA2		PA0
APORT3Y	BUSCY											PF5		PF3		PF1		PE15		PE13		PE11		PE9		PE7		PE5					
APORT4Y	BUSDY												PF4		PF2		PF0		PE14		PE12		PE10		PE8		PE6		PE4				
OPA0_P																																	
APORT1X	BUSAX		PB14		PB12						PB6		PB4						PA14				PA10				PA6		PA4		PA2		PA0
APORT2X	BUSBX			PB13		PB11						PB5		PB3				PA15		PA13				PA9				PA5		PA3		PA1	
APORT3X	BUSCX												PF4		PF2		PF0		PE14		PE12		PE10		PE8		PE6		PE4				
APORT4X	BUSDX											PF5		PF3		PF1		PE15		PE13		PE11		PE9		PE7		PE5					

Port	Bus	CH31	CH30	CH29	CH28	CH27	CH26	CH25	CH24	CH23	CH22	CH21	CH20	CH19	CH18	CH17	CH16	CH15	CH14	CH13	CH12	CH11	CH10	CH9	CH8	CH7	CH6	CH5	CH4	CH3	CH2	CH1	CH0
OPA1_N	APORT1Y		PB14	PB13	PB12	PB11					PB6	PB5	PB4	PB3		PF1		PA15	PA14	PA13		PE11	PA10	PA9		PE7	PA6	PA5	PA4	PA3	PA2	PA1	PA0
	APORT2Y		PB14		PB12						PB6		PB4																				
	BUSAY			PB13		PB11						PF5		PF3	PF2		PF0	PE15	PE14	PE13	PE12		PE10	PE9	PE8		PE6	PE5	PE4				
	BUSDY												PF4			PF1						PE11				PE7							
	APORT3Y											PF5		PF3	PF2		PF0	PE15	PE14	PE13	PE12		PE10	PE9	PE8		PE6	PE5	PE4				
	BUSCY												PF4			PF1						PE11				PE7							
OPA1_P	APORT4Y											PB5		PB3				PA15		PA13				PA9						PA3		PA1	
	BUSDY												PB4		PF2				PE14		PE12				PE8		PE6		PE4		PA2		PA0
	APORT1X		PB14	PB13	PB12	PB11					PB6		PB4						PA14				PA10				PA6		PA4		PA2		PA0
	BUSAX																																
	APORT2X			PB13		PB11						PB5		PB3				PA15		PA13				PA9				PA5		PA3		PA1	
	BUSBX				PB12																												
	APORT3X												PF4		PF2		PF0		PE14		PE12		PE10		PE8		PE6		PE4				
	BUSCX																																
	APORT4X											PF5		PF3		PF1		PE15		PE13		PE11		PE9		PE7		PE5					
	BUSDX																																
OPA2_N	APORT1Y																																
	BUSAY																																
	APORT2Y		PB14		PB12						PB6																						
	BUSBY																																
	APORT3Y											PF5		PF3		PF1		PE15		PE13		PE11		PE9		PE7		PE5					
	BUSCY																																
	APORT4Y											PB5		PB3				PA15		PA13				PA9				PA5		PA3		PA1	
	BUSDY												PB4		PF2		PF0		PE14		PE12		PE10		PE8		PE6		PE4		PA2		PA0

Port	Bus	CH31	CH30	CH29	CH28	CH27	CH26	CH25	CH24	CH23	CH22	CH21	CH20	CH19	CH18	CH17	CH16	CH15	CH14	CH13	CH12	CH11	CH10	CH9	CH8	CH7	CH6	CH5	CH4	CH3	CH2	CH1	CH0
OPA2_OUT	APORT1Y			PB13		PB11						PB5		PB3				PA15		PA13				PA9				PA5		PA3		PA1	
	APORT2Y		PB14		PB12						PB6		PB4						PA14				PA10				PA6		PA4		PA2		PA0
	APORT3Y											PF5		PF3		PF1		PE15		PE13		PE11		PE9		PE7		PE5					
	APORT4Y												PF4		PF2		PF0		PE14		PE12		PE10		PE8		PE6		PE4				
OPA2_P	APORT1X		PB14	PB13	PB12	PB11					PB6	PB5	PB4	PB3				PA15	PA14	PA13			PA10	PA9			PA6	PA5	PA4	PA3	PA2	PA1	PA0
	APORT2X			PB13	PB12	PB11						PB5		PB3				PA15	PA14	PA13			PA10	PA9			PA6	PA5	PA4	PA3		PA1	
	APORT3X												PF4		PF2		PF0		PE14		PE12		PE10		PE8		PE6		PE4				
	APORT4X											PF5		PF3		PF1		PE15		PE13		PE11		PE9		PE7		PE5					
	BUSAX		PB14		PB12						PB6		PB4						PA14				PA10				PA6		PA4		PA2		PA0
	BUSBX			PB13	PB12	PB11						PB5		PB3				PA15	PA14	PA13			PA10	PA9			PA6	PA5	PA4	PA3		PA1	
	BUSCX												PF4		PF2		PF0		PE14		PE12		PE10		PE8		PE6		PE4				
	BUSDX											PF5		PF3		PF1		PE15		PE13		PE11		PE9		PE7		PE5					
OPA3_N	APORT1Y			PB13		PB11						PB5		PB3				PA15		PA13				PA9				PA5		PA3		PA1	
	APORT2Y		PB14		PB12						PB6		PB4						PA14				PA10				PA6		PA4		PA2		PA0
	APORT3Y											PF5		PF3		PF1		PE15		PE13		PE11		PE9		PE7		PE5					
	APORT4Y												PF4		PF2		PF0		PE14		PE12		PE10		PE8		PE6		PE4				
	BUSAY		PB14	PB13	PB12	PB11					PB6	PB5	PB4	PB3				PA15	PA14	PA13			PA10	PA9			PA6	PA5	PA4	PA3	PA2	PA1	PA0
	BUSBY												PF4		PF2		PF0		PE14		PE12		PE10		PE8		PE6		PE4				
	BUSCY											PF5		PF3		PF1		PE15		PE13		PE11		PE9		PE7		PE5					
	BUSDY		PB14	PB13	PB12	PB11					PB6	PB5	PB4	PB3				PA15	PA14	PA13			PA10	PA9			PA6	PA5	PA4	PA3	PA2	PA1	PA0

Port	Bus	CH31	CH30	CH29	CH28	CH27	CH26	CH25	CH24	CH23	CH22	CH21	CH20	CH19	CH18	CH17	CH16	CH15	CH14	CH13	CH12	CH11	CH10	CH9	CH8	CH7	CH6	CH5	CH4	CH3	CH2	CH1	CH0
OPA3_OUT	APORT1Y			PB13		PB11					PB6	PB5		PB3				PA15		PA13				PA9						PA3		PA1	
	APORT2Y		PB14		PB12						PB6		PB4						PA14				PA10				PA6		PA4		PA2		PA0
	APORT3Y											PF5		PF3		PF1		PE15		PE13		PE11		PE9		PE7		PE5					
	APORT4Y												PF4		PF2		PF0		PE14		PE12		PE10		PE8		PE6		PE4				
OPA3_P	APORT1X		PB14		PB12						PB6		PB4						PA14				PA10				PA6		PA4		PA2		PA0
	APORT2X			PB13		PB11						PB5		PB3				PA15		PA13				PA9				PA5		PA3		PA1	
	APORT3X												PF4		PF2		PF0		PE14		PE12		PE10		PE8		PE6		PE4				
	APORT4X											PF5		PF3		PF1		PE15		PE13		PE11		PE9		PE7		PE5					
	BUSAX		PB14		PB12						PB6		PB4						PA14				PA10				PA6		PA4		PA2		PA0
	BUSBX			PB13		PB11						PB5		PB3				PA15		PA13				PA9				PA5		PA3		PA1	
	BUSCX												PF4		PF2		PF0		PE14		PE12		PE10		PE8		PE6		PE4				
	BUSDX											PF5		PF3		PF1		PE15		PE13		PE11		PE9		PE7		PE5					
VDAC0_OUT0 / OPA0_OUT	APORT1Y			PB13		PB11					PB6	PB5		PB3				PA15		PA13				PA9				PA5		PA3		PA1	
	APORT2Y		PB14		PB12						PB6		PB4						PA14				PA10				PA6		PA4		PA2		PA0
	APORT3Y											PF5		PF3		PF1		PE15		PE13		PE11		PE9		PE7		PE5					
	APORT4Y												PF4		PF2		PF0		PE14		PE12		PE10		PE8		PE6		PE4				
	BUSAY		PB14		PB12						PB6		PB4						PA14				PA10				PA6		PA4		PA2		PA0
	BUSBY			PB13		PB11						PB5		PB3				PA15		PA13				PA9				PA5		PA3		PA1	
	BUSCY												PF4		PF2		PF0		PE14		PE12		PE10		PE8		PE6		PE4				
	BUSDY											PF5		PF3		PF1		PE15		PE13		PE11		PE9		PE7		PE5					

Port	Bus				
CH31		APORT1Y	APORT2Y	APORT3Y	APORT4Y
CH30		BUSAY	BUSBY	BUSCY	BUSDY
CH29	VDAC0_OUT1 / OPA1_OUT				
CH28		PB13			
CH27			PB14		
CH26		PB11			
CH25			PB12		
CH24					
CH23					
CH22					
CH21			PB6		
CH20		PB5		PF5	
CH19			PB4		PF4
CH18		PB3		PF3	
CH17					PF2
CH16				PF1	
CH15					PF0
CH14		PA15		PE15	
CH13			PA14		PE14
CH12		PA13		PE13	
CH11					PE12
CH10				PE11	
CH9			PA10		PE10
CH8		PA9		PE9	
CH7					PE8
CH6				PE7	
CH5			PA6		PE6
CH4		PA5		PE5	
CH3			PA4		PE4
CH2		PA3			
CH1			PA2		
CH0		PA1			
			PA0		

6. TQFP80 Package Specifications

6.1 TQFP80 Package Dimensions

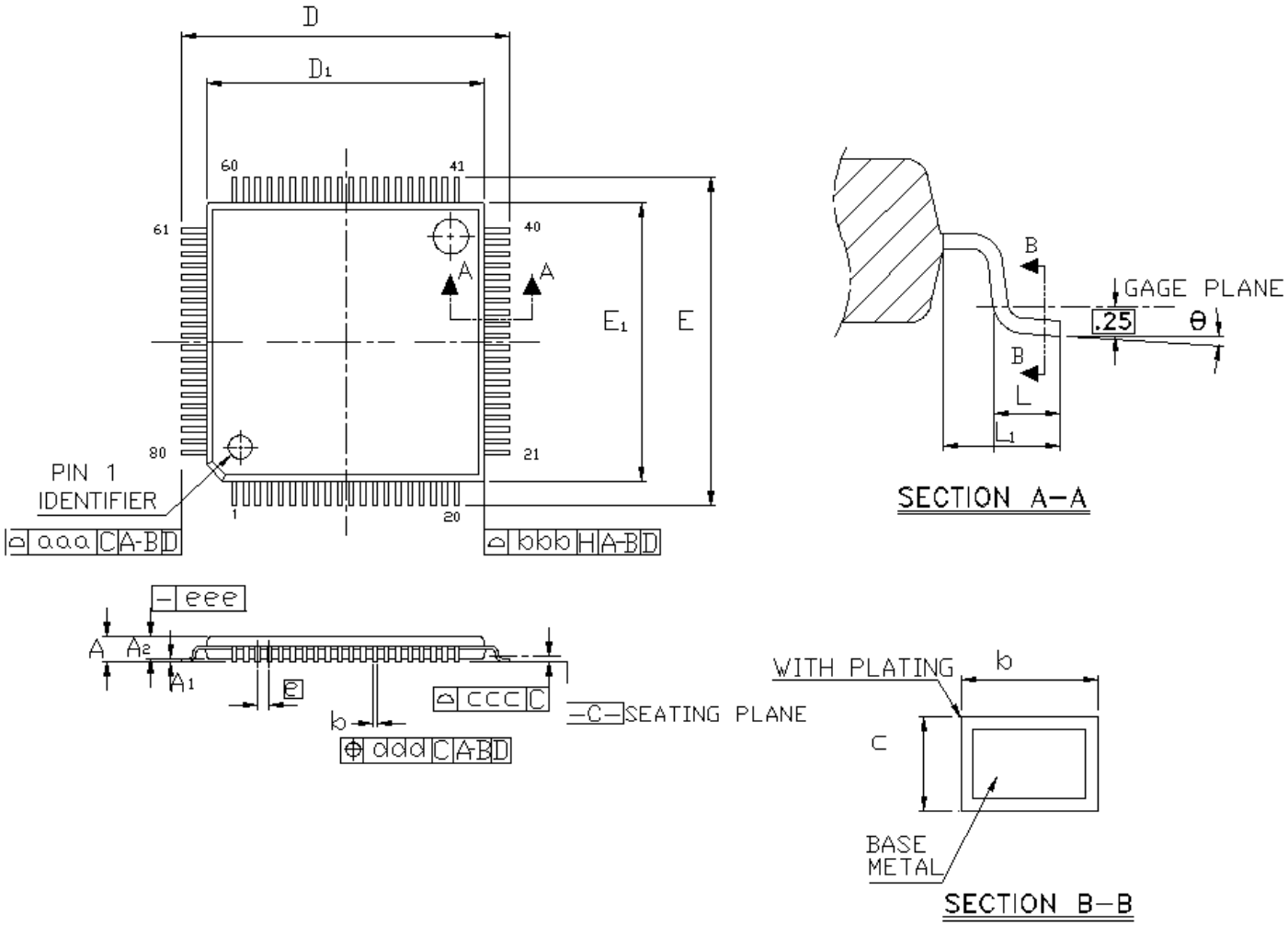

Figure 6.1. TQFP80 Package Drawing

Table 6.1. TQFP80 Package Dimensions

Dimension	Min	Typ	Max
A	—	—	1.20
A1	0.05	—	0.15
A2	0.95	1.00	1.05
b	0.17	0.20	0.27
c	0.09	—	0.20
D	14.00 BSC		
D1	12.00 BSC		
e	0.50 BSC		
E	14.00 BSC		
E1	12.00 BSC		
L	0.45	0.60	0.75
L1	1.00 REF		
θ	0	3.5	7
aaa	0.20		
bbb	0.20		
ccc	0.08		
ddd	0.08		
eee	0.05		

Note:

1. All dimensions shown are in millimeters (mm) unless otherwise noted.
2. Dimensioning and Tolerancing per ANSI Y14.5M-1994.
3. This package outline conforms to JEDEC MS-026, variant ADD.
4. Recommended card reflow profile is per the JEDEC/IPC J-STD-020C specification for Small Body Components.

6.2 TQFP80 PCB Land Pattern

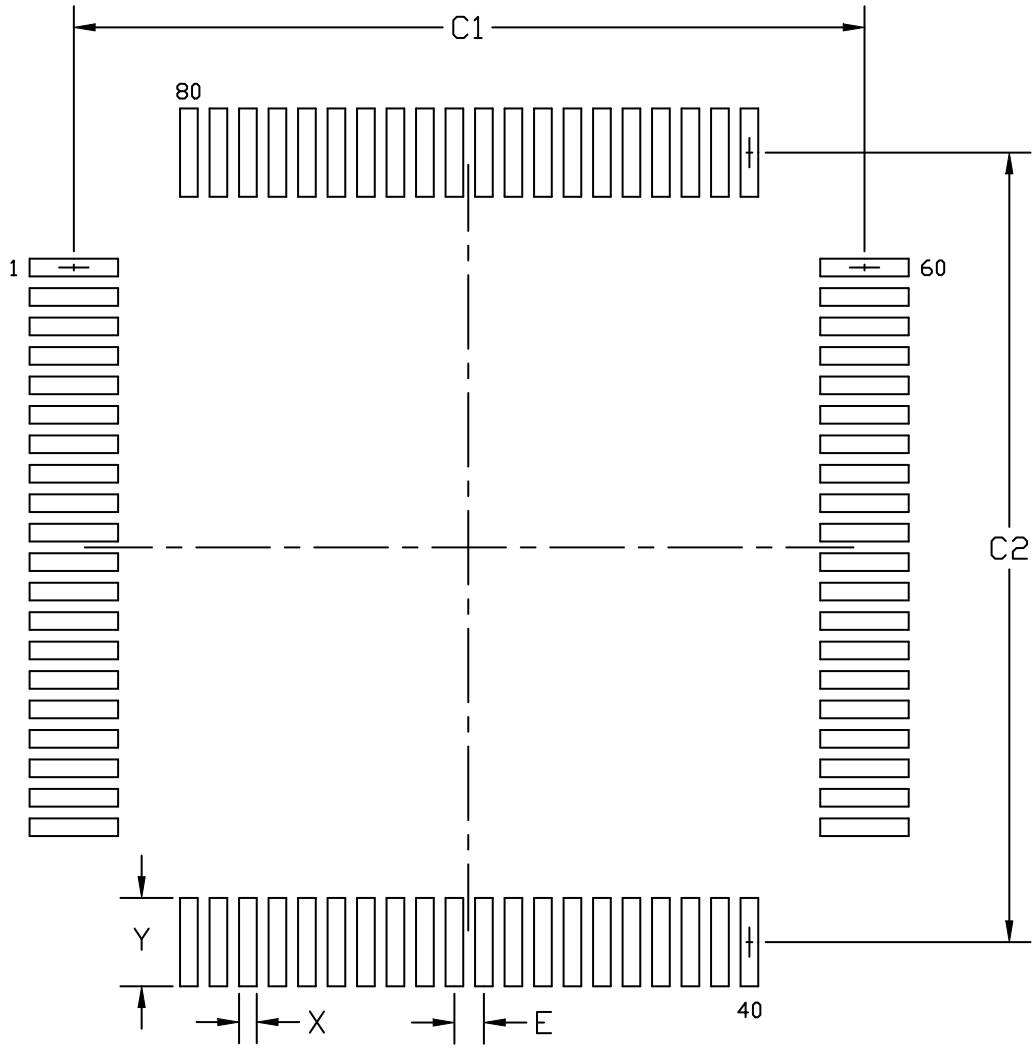

Figure 6.2. TQFP80 PCB Land Pattern Drawing

Table 6.2. TQFP80 PCB Land Pattern Dimensions

Dimension	Min	Max
C1	13.30	13.40
C2	13.30	13.40
E	0.50 BSC	
X	0.20	0.30
Y	1.40	1.50

Note:

1. All dimensions shown are in millimeters (mm) unless otherwise noted.
2. This Land Pattern Design is based on the IPC-7351 guidelines.
3. All metal pads are to be non-solder mask defined (NSMD). Clearance between the solder mask and the metal pad is to be 60 µm minimum, all the way around the pad.
4. A stainless steel, laser-cut and electro-polished stencil with trapezoidal walls should be used to assure good solder paste release.
5. The stencil thickness should be 0.125 mm (5 mils).
6. The ratio of stencil aperture to land pad size can be 1:1 for all pads.
7. A No-Clean, Type-3 solder paste is recommended.
8. The recommended card reflow profile is per the JEDEC/IPC J-STD-020 specification for Small Body Components.

6.3 TQFP80 Package Marking

Figure 6.3. TQFP80 Package Marking

The package marking consists of:

- PPPPPPPPPP – The part number designation.
- TTTTTT – A trace or manufacturing code. The first letter is the device revision.
- YY – The last 2 digits of the assembly year.
- WW – The 2-digit workweek when the device was assembled.

7. QFN80 Package Specifications

7.1 QFN80 Package Dimensions

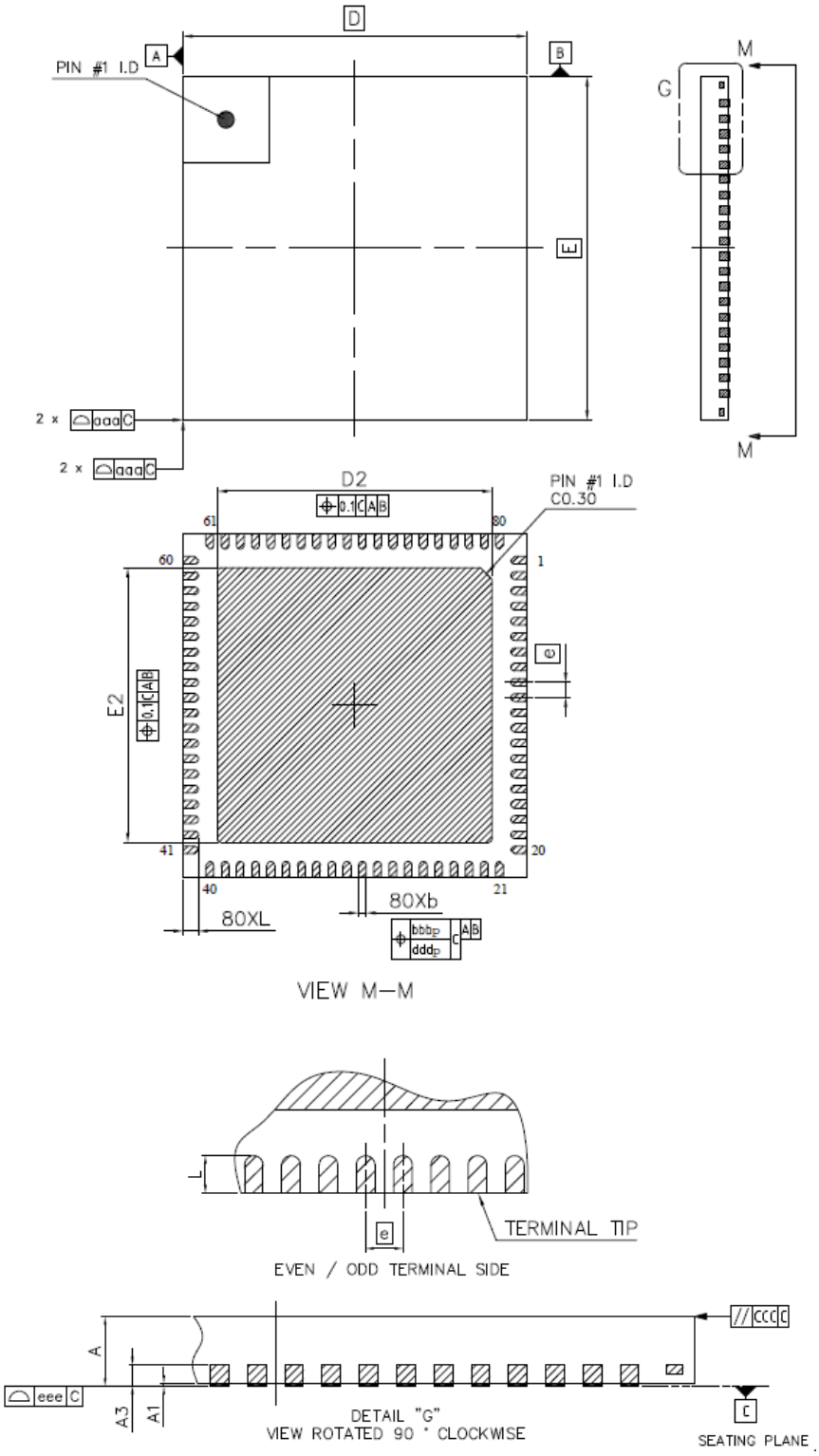

Figure 7.1. QFN80 Package Drawing

Table 7.1. QFN80 Package Dimensions

Dimension	Min	Typ	Max
A	0.70	0.75	0.80
A1	0.00	—	0.05
b	0.15	0.2	0.25
A3	0.203 REF		
D	9.00 BSC		
e	0.40 BSC		
E	9.00 BSC		
D2	7.10	7.20	7.30
E2	7.10	7.20	7.30
L	0.35	0.40	0.45
aaa	0.10		
bbb	0.10		
ccc	0.10		
ddd	0.05		
eee	0.08		

Note:

1. All dimensions shown are in millimeters (mm) unless otherwise noted.
2. Dimensioning and Tolerancing per ANSI Y14.5M-1994.
3. Recommended card reflow profile is per the JEDEC/IPC J-STD-020 specification for Small Body Components.

7.2 QFN80 PCB Land Pattern

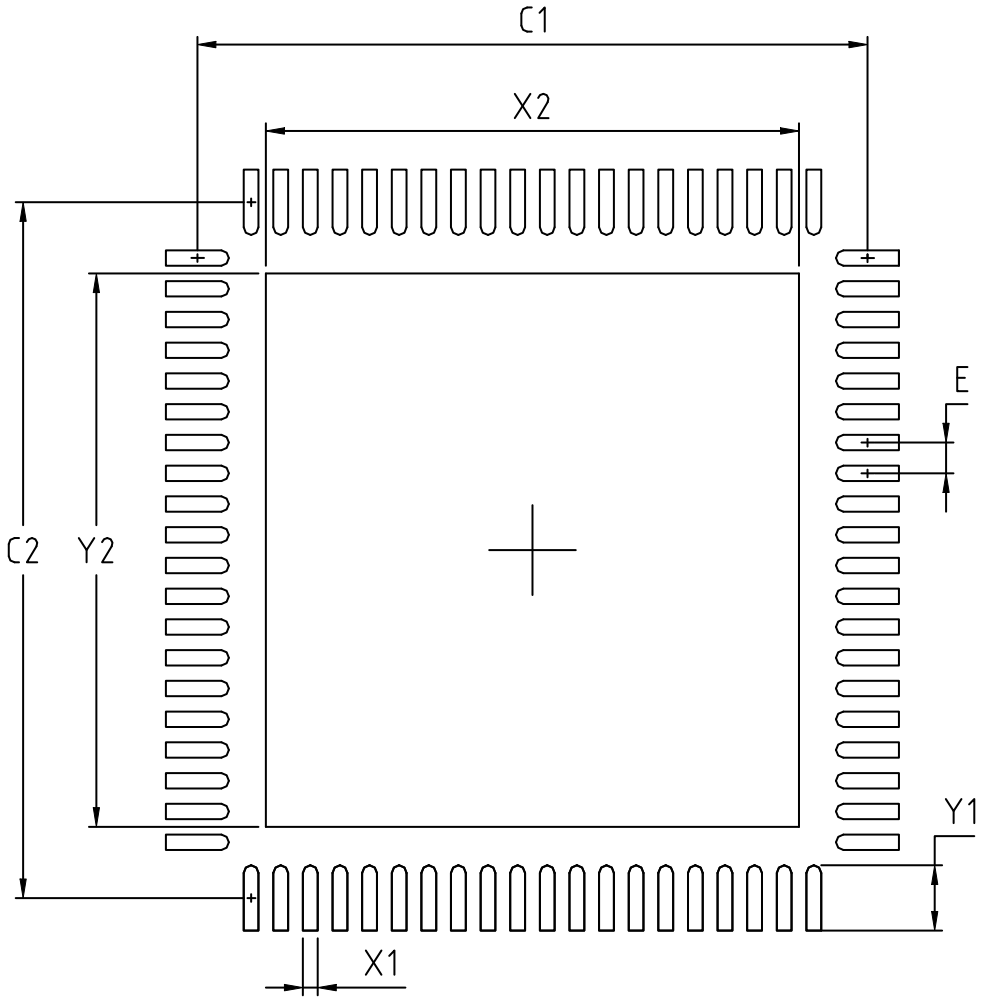

Figure 7.2. QFN80 PCB Land Pattern Drawing

Table 7.2. QFN80 PCB Land Pattern Dimensions

Dimension	Typ
C1	8.90
C2	8.90
E	0.40
X1	0.20
Y1	0.85
X2	7.30
Y2	7.30

Note:

1. All dimensions shown are in millimeters (mm) unless otherwise noted.
2. This Land Pattern Design is based on the IPC-7351 guidelines.
3. All dimensions shown are at Maximum Material Condition (MMC). Least Material Condition (LMC) is calculated based on a Fabrication Allowance of 0.05mm.
4. All metal pads are to be non-solder mask defined (NSMD). Clearance between the solder mask and the metal pad is to be 60 µm minimum, all the way around the pad.
5. A stainless steel, laser-cut and electro-polished stencil with trapezoidal walls should be used to assure good solder paste release.
6. The stencil thickness should be 0.125 mm (5 mils).
7. The ratio of stencil aperture to land pad size can be 1:1 for all pads.
8. A 3x3 array of 1.45 mm square openings on a 2.00 mm pitch can be used for the center ground pad.
9. A No-Clean, Type-3 solder paste is recommended.
10. The recommended card reflow profile is per the JEDEC/IPC J-STD-020 specification for Small Body Components.

7.3 QFN80 Package Marking

Figure 7.3. QFN80 Package Marking

The package marking consists of:

- PPPPPPPPPP – The part number designation.
- TTTTTT – A trace or manufacturing code. The first letter is the device revision.
- YY – The last 2 digits of the assembly year.
- WW – The 2-digit workweek when the device was assembled.

8. TQFP64 Package Specifications

8.1 TQFP64 Package Dimensions

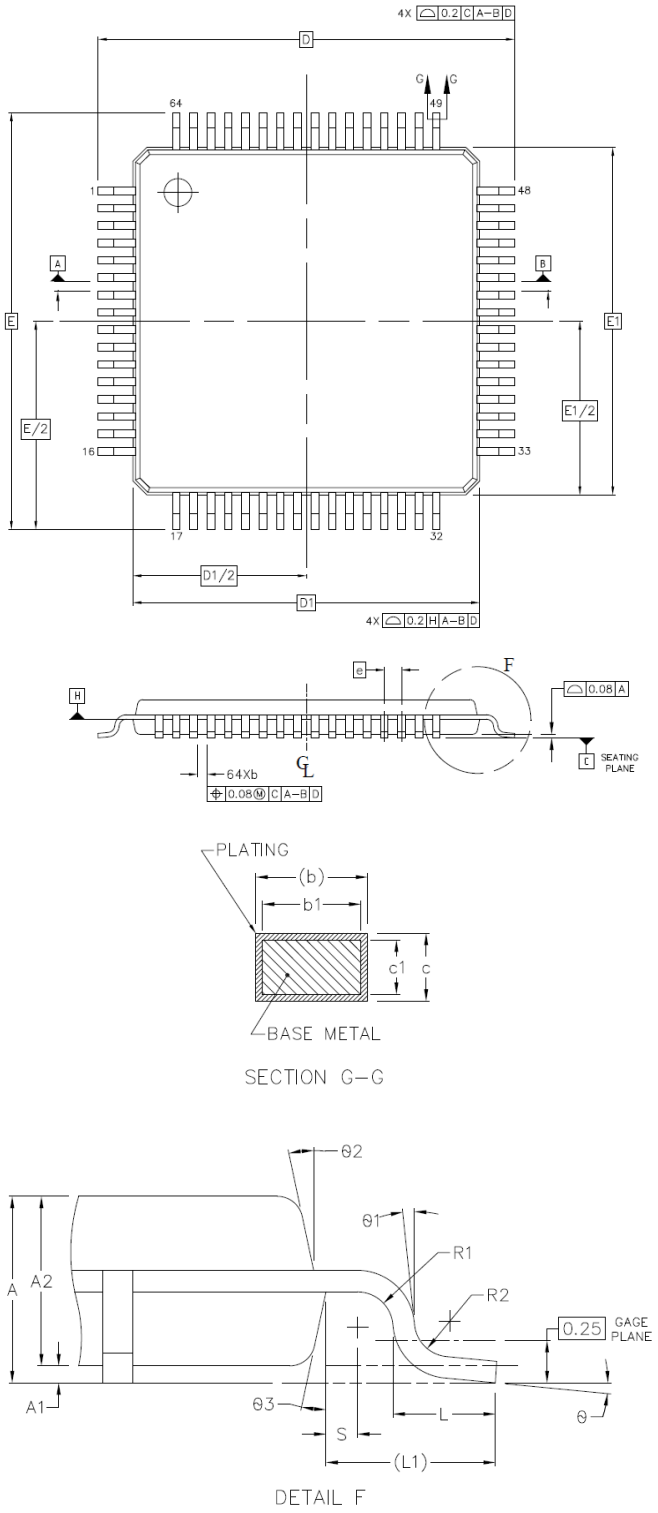

Figure 8.1. TQFP64 Package Drawing

Table 8.1. TQFP64 Package Dimensions

Dimension	Min	Typ	Max
A	—	1.15	1.20
A1	0.05	—	0.15
A2	0.95	1.00	1.05
b	0.17	0.22	0.27
b1	0.17	0.20	0.23
c	0.09	—	0.20
c1	0.09	—	0.16
D	12.00 BSC		
D1	10.00 BSC		
e	0.50 BSC		
E	12.00 BSC		
E1	10.00 BSC		
L	0.45	0.60	0.75
L1	1.00 REF		
R1	0.08	—	—
R2	0.08	—	0.20
S	0.20	—	—
θ	0	3.5	7
Θ1	0	—	0.10
Θ2	11	12	13
Θ3	11	12	13

Note:

1. All dimensions shown are in millimeters (mm) unless otherwise noted.
2. Dimensioning and Tolerancing per ANSI Y14.5M-1994.
3. Recommended card reflow profile is per the JEDEC/IPC J-STD-020 specification for Small Body Components.

8.2 TQFP64 PCB Land Pattern

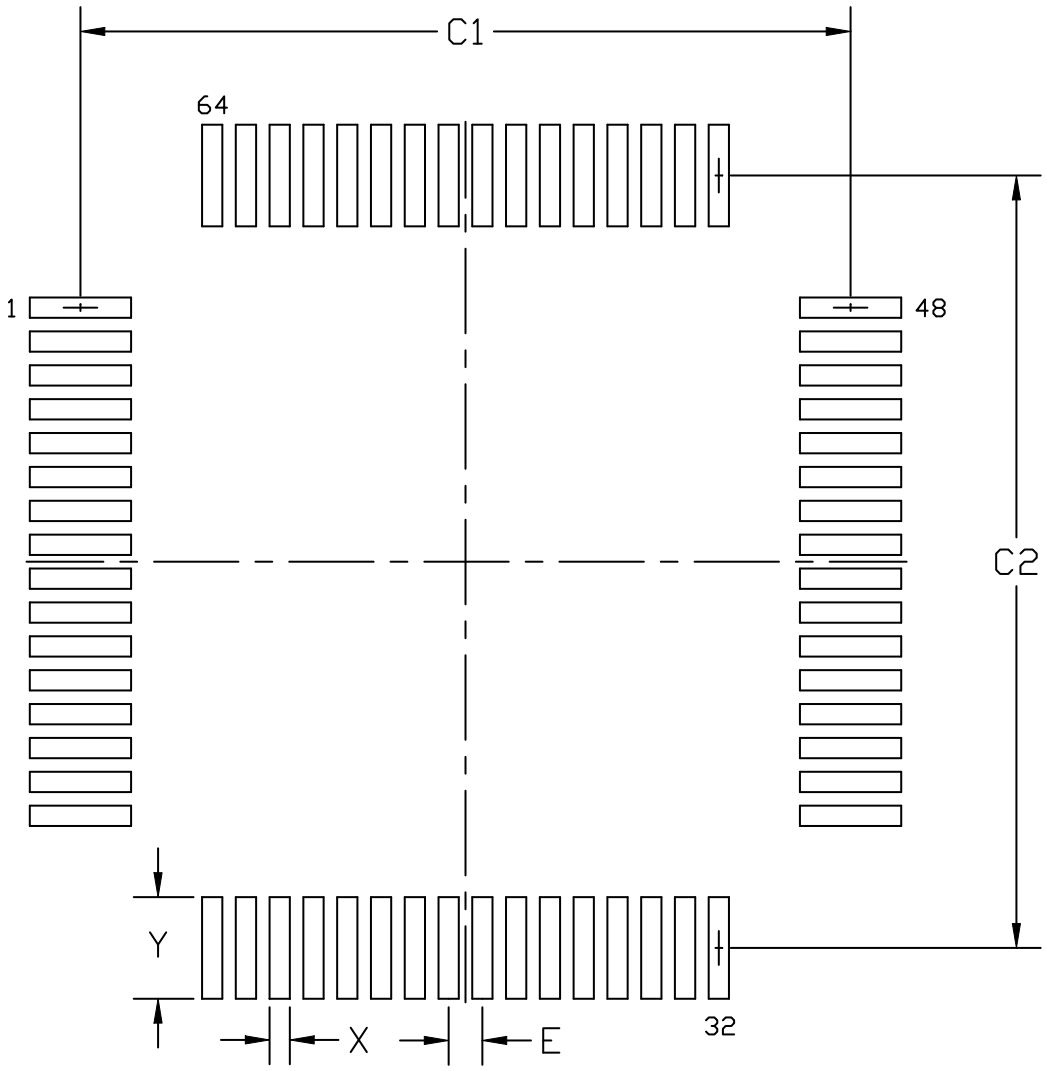

Figure 8.2. TQFP64 PCB Land Pattern Drawing

Table 8.2. TQFP64 PCB Land Pattern Dimensions

Dimension	Min	Max
C1	11.30	11.40
C2	11.30	11.40
E	0.50 BSC	
X	0.20	0.30
Y	1.40	1.50

Note:

1. All dimensions shown are in millimeters (mm) unless otherwise noted.
2. This Land Pattern Design is based on the IPC-7351 guidelines.
3. All metal pads are to be non-solder mask defined (NSMD). Clearance between the solder mask and the metal pad is to be 60 µm minimum, all the way around the pad.
4. A stainless steel, laser-cut and electro-polished stencil with trapezoidal walls should be used to assure good solder paste release.
5. The stencil thickness should be 0.125 mm (5 mils).
6. The ratio of stencil aperture to land pad size can be 1:1 for all pads.
7. A No-Clean, Type-3 solder paste is recommended.
8. The recommended card reflow profile is per the JEDEC/IPC J-STD-020 specification for Small Body Components.

8.3 TQFP64 Package Marking

Figure 8.3. TQFP64 Package Marking

The package marking consists of:

- PPPPPPPPPP – The part number designation.
- TTTTTT – A trace or manufacturing code. The first letter is the device revision.
- YY – The last 2 digits of the assembly year.
- WW – The 2-digit workweek when the device was assembled.

9. QFN64 Package Specifications

9.1 QFN64 Package Dimensions

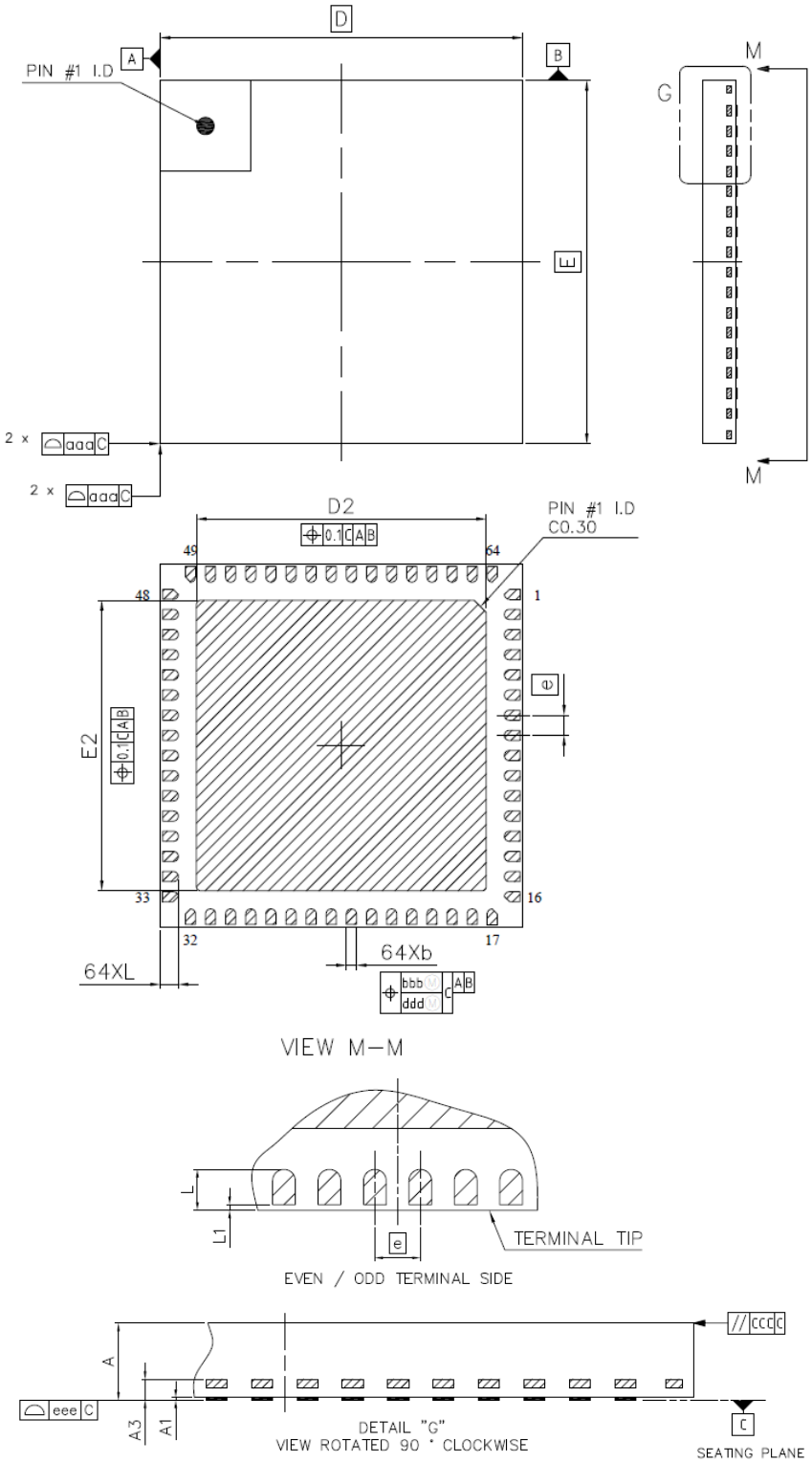

Figure 9.1. QFN64 Package Drawing

Table 9.1. QFN64 Package Dimensions

Dimension	Min	Typ	Max
A	0.70	0.75	0.80
A1	0.00	—	0.05
b	0.20	0.25	0.30
A3	0.203 REF		
D	9.00 BSC		
e	0.50 BSC		
E	9.00 BSC		
D2	7.10	7.20	7.30
E2	7.10	7.20	7.30
L	0.40	0.45	0.50
L1	0.00	—	0.10
aaa	0.10		
bbb	0.10		
ccc	0.10		
ddd	0.05		
eee	0.08		

Note:

1. All dimensions shown are in millimeters (mm) unless otherwise noted.
2. Dimensioning and Tolerancing per ANSI Y14.5M-1994.
3. Recommended card reflow profile is per the JEDEC/IPC J-STD-020 specification for Small Body Components.

9.2 QFN64 PCB Land Pattern

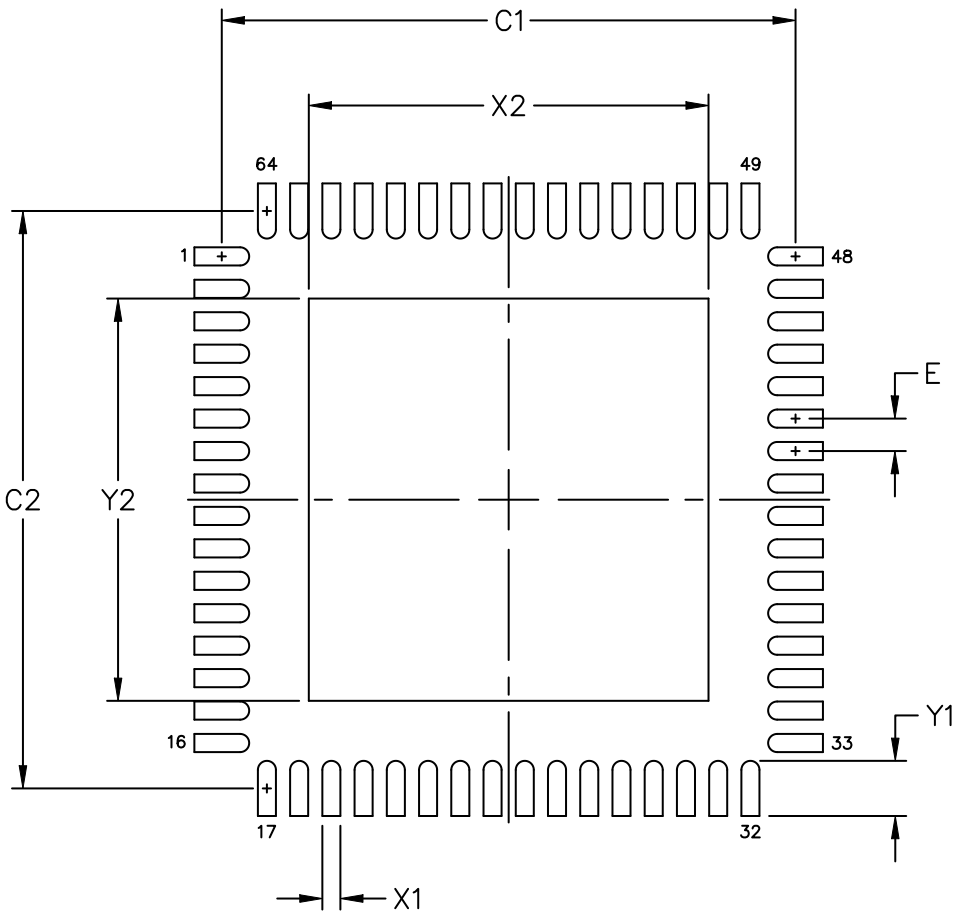

Figure 9.2. QFN64 PCB Land Pattern Drawing

Table 9.2. QFN64 PCB Land Pattern Dimensions

Dimension	Typ
C1	8.90
C2	8.90
E	0.50
X1	0.30
Y1	0.85
X2	7.30
Y2	7.30

Note:

1. All dimensions shown are in millimeters (mm) unless otherwise noted.
2. This Land Pattern Design is based on the IPC-7351 guidelines.
3. All dimensions shown are at Maximum Material Condition (MMC). Least Material Condition (LMC) is calculated based on a Fabrication Allowance of 0.05mm.
4. All metal pads are to be non-solder mask defined (NSMD). Clearance between the solder mask and the metal pad is to be 60 µm minimum, all the way around the pad.
5. A stainless steel, laser-cut and electro-polished stencil with trapezoidal walls should be used to assure good solder paste release.
6. The stencil thickness should be 0.125 mm (5 mils).
7. The ratio of stencil aperture to land pad size can be 1:1 for all pads.
8. A 3x3 array of 1.45 mm square openings on a 2.00 mm pitch can be used for the center ground pad.
9. A No-Clean, Type-3 solder paste is recommended.
10. The recommended card reflow profile is per the JEDEC/IPC J-STD-020 specification for Small Body Components.

9.3 QFN64 Package Marking

Figure 9.3. QFN64 Package Marking

The package marking consists of:

- PPPPPPPPPP – The part number designation.
- TTTTTT – A trace or manufacturing code. The first letter is the device revision.
- YY – The last 2 digits of the assembly year.
- WW – The 2-digit workweek when the device was assembled.

10. TQFP48 Package Specifications

10.1 TQFP48 Package Dimensions

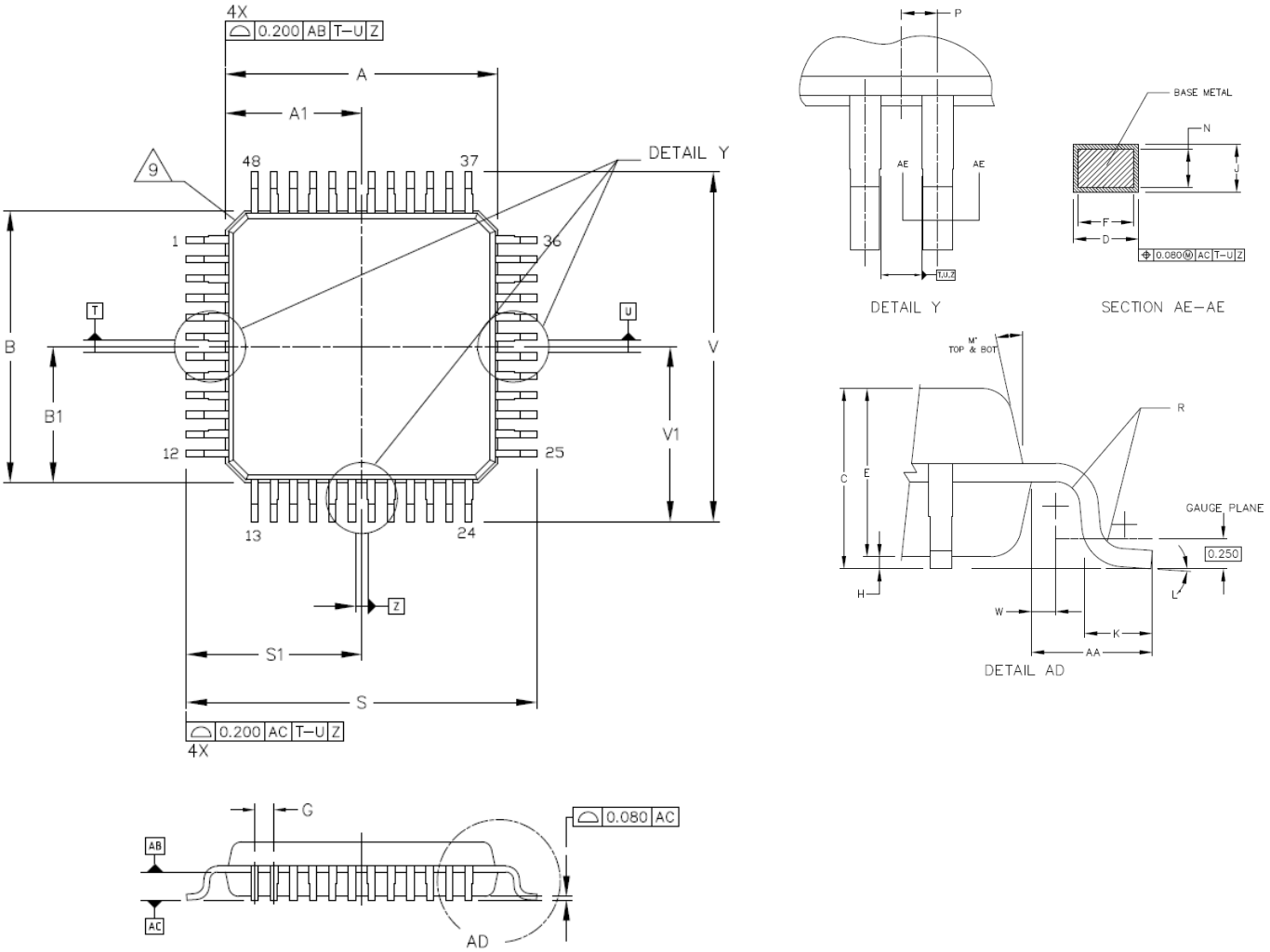

Figure 10.1. TQFP48 Package Drawing

Table 10.1. TQFP48 Package Dimensions

Dimension	Min	Typ	Max
A		7.00 BSC	
A1		3.50 BSC	
B		7.00 BSC	
B1		3.50 BSC	
C	1.00	—	1.20
D	0.17	—	0.27
E	0.95	—	1.05
F	0.17	—	0.23
G		0.50 BSC	
H	0.05	—	0.15
J	0.09	—	0.20
K	0.50	—	0.70
L	0	—	7
M		12 REF	
N	0.09	—	0.16
P		0.25 BSC	
R	0.150	—	0.250
S		9.00 BSC	
S1		4.50 BSC	
V		9.00 BSC	
V1		4.50 BSC	
W		0.20 BSC	
AA		1.00 BSC	

Note:

1. All dimensions shown are in millimeters (mm) unless otherwise noted.
2. Dimensioning and Tolerancing per ANSI Y14.5M-1994.
3. Recommended card reflow profile is per the JEDEC/IPC J-STD-020 specification for Small Body Components.

10.2 TQFP48 PCB Land Pattern

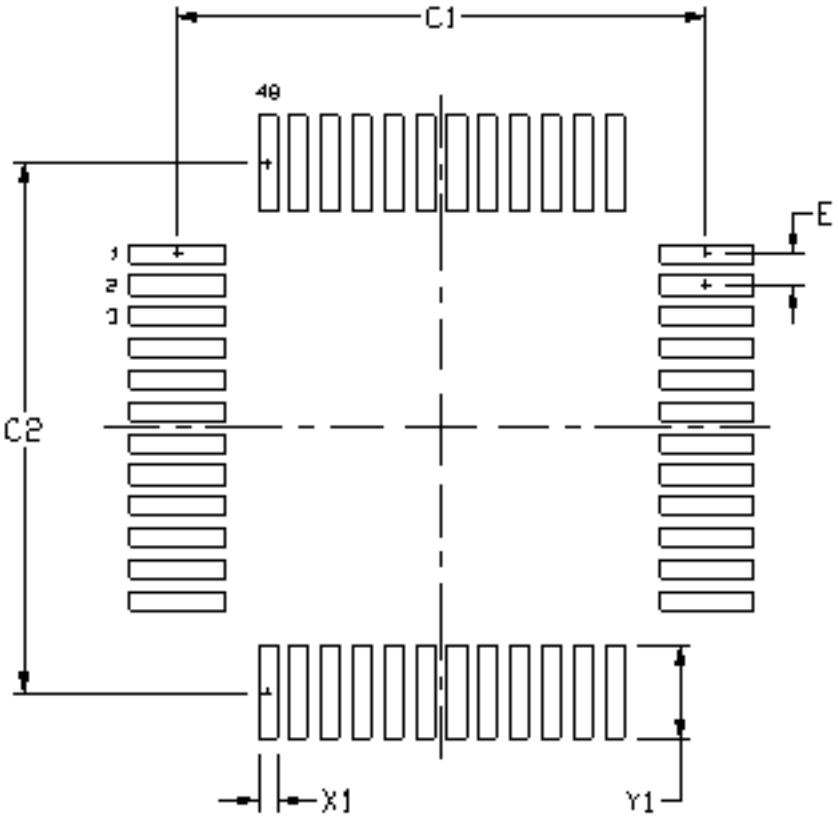

Figure 10.2. TQFP48 PCB Land Pattern Drawing

Table 10.2. TQFP48 PCB Land Pattern Dimensions

Dimension	Typ
C1	8.50
C2	8.50
E	0.50
X	0.30
Y	1.60

Note:

1. All dimensions shown are in millimeters (mm) unless otherwise noted.
2. This Land Pattern Design is based on the IPC-7351 guidelines.
3. All metal pads are to be non-solder mask defined (NSMD). Clearance between the solder mask and the metal pad is to be 60 µm minimum, all the way around the pad.
4. A stainless steel, laser-cut and electro-polished stencil with trapezoidal walls should be used to assure good solder paste release.
5. The stencil thickness should be 0.125 mm (5 mils).
6. The ratio of stencil aperture to land pad size can be 1:1 for all pads.
7. A No-Clean, Type-3 solder paste is recommended.
8. The recommended card reflow profile is per the JEDEC/IPC J-STD-020C specification for Small Body Components.

10.3 TQFP48 Package Marking

Figure 10.3. TQFP48 Package Marking

The package marking consists of:

- PPPPPPPPPP – The part number designation.
- TTTTTT – A trace or manufacturing code. The first letter is the device revision.
- YY – The last 2 digits of the assembly year.
- WW – The 2-digit workweek when the device was assembled.

11. QFN32 Package Specifications

11.1 QFN32 Package Dimensions

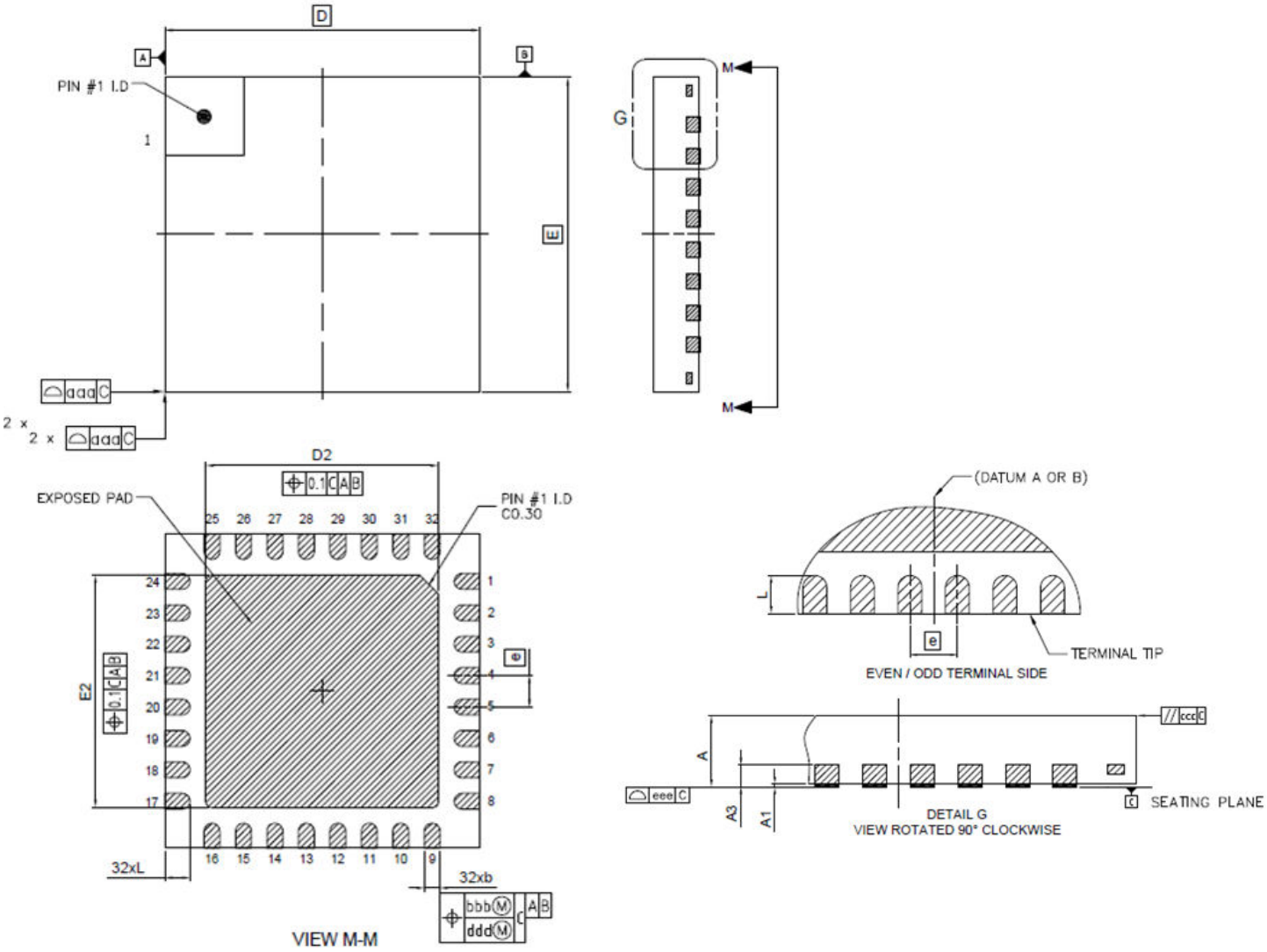

Figure 11.1. QFN32 Package Drawing

Table 11.1. QFN32 Package Dimensions

Dimension	Min	Typ	Max
A	0.70	0.75	0.80
A1	0.00	—	0.05
A3	0.203 REF		
b	0.20	0.25	0.30
D	5.0 BSC		
D2/E2	3.60	3.70	3.80
E	5.0 BSC		
e	0.50 BSC		
L	0.35	0.40	0.45
aaa	0.10		
bbb	0.10		
ccc	0.10		
ddd	0.05		
eee	0.08		

Note:

1. All dimensions shown are in millimeters (mm) unless otherwise noted.
2. Dimensioning and Tolerancing per ANSI Y14.5M-1994.
3. This drawing conforms to the JEDEC Solid State Outline MO-220, Variation VKKD-4.
4. Recommended card reflow profile is per the JEDEC/IPC J-STD-020 specification for Small Body Components.

11.2 QFN32 PCB Land Pattern

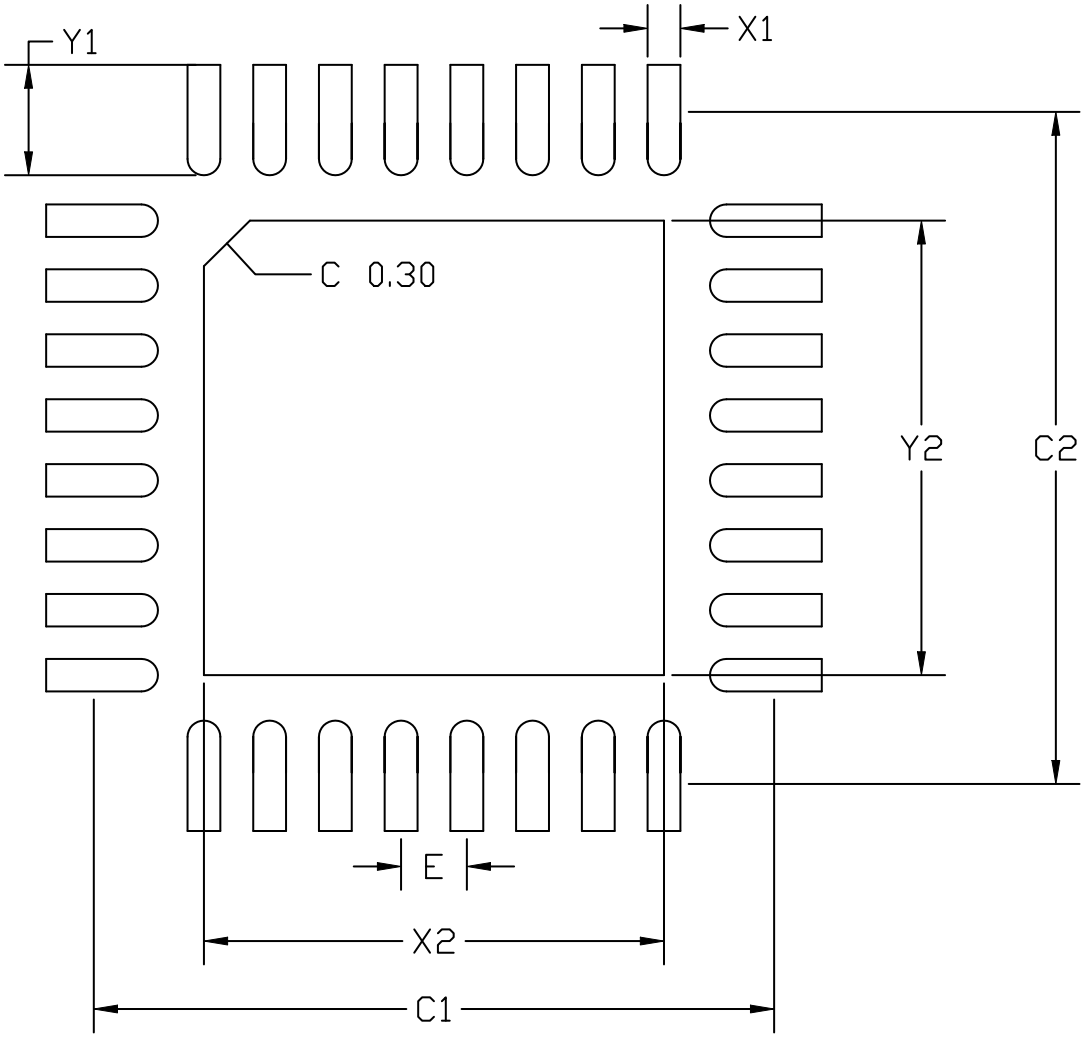

Figure 11.2. QFN32 PCB Land Pattern Drawing

Table 11.2. QFN32 PCB Land Pattern Dimensions

Dimension	Typ
C1	5.00
C2	5.00
E	0.50
X1	0.30
Y1	0.80
X2	3.80
Y2	3.80

Note:

1. All dimensions shown are in millimeters (mm) unless otherwise noted.
2. This Land Pattern Design is based on the IPC-7351 guidelines.
3. All metal pads are to be non-solder mask defined (NSMD). Clearance between the solder mask and the metal pad is to be 60 µm minimum, all the way around the pad.
4. A stainless steel, laser-cut and electro-polished stencil with trapezoidal walls should be used to assure good solder paste release.
5. The stencil thickness should be 0.125 mm (5 mils).
6. The ratio of stencil aperture to land pad size can be 1:1 for all perimeter pads.
7. A 2x2 array of 0.9 mm square openings on a 1.2 mm pitch should be used for the center ground pad.
8. A No-Clean, Type-3 solder paste is recommended.
9. The recommended card reflow profile is per the JEDEC/IPC J-STD-020 specification for Small Body Components.

11.3 QFN32 Package Marking

Figure 11.3. QFN32 Package Marking

The package marking consists of:

- PPPPPPPPPP – The part number designation.
- TTTTTT – A trace or manufacturing code. The first letter is the device revision.
- YY – The last 2 digits of the assembly year.
- WW – The 2-digit workweek when the device was assembled.

12. Revision History

Revision 1.0

November, 2018

- Table 2.1 Ordering Information on page 4 updated with revision B part numbers.
- 4.1 Electrical Characteristics updated with final characterization data and production test limits.
- 4.1 Electrical Characteristics sorted all table footnotes in order of appearance.
- Split VSS and VREGVSS pin definitions into separate entries in Table 5.2 EFM32TG11B5xx in QFN80 Device Pinout on page 75, Table 5.6 EFM32TG11B5xx in QFN64 Device Pinout on page 84, and Table 5.12 EFM32TG11B5xx in QFN32 Device Pinout on page 96.
- Replaced VREGVSS name and description with VSS in Table 5.7 EFM32TG11B3xx in QFN64 Device Pinout on page 86, Table 5.8 EFM32TG11B1xx in QFN64 Device Pinout on page 88, and Table 5.13 EFM32TG11B1xx in QFN32 Device Pinout on page 98.
- Table 5.14 GPIO Functionality Table on page 100 sorted by GPIO name in alphabetical order.
- Table 5.15 Alternate Functionality Overview on page 104 changed vertical white space.
- Table 7.1 QFN80 Package Dimensions on page 130 corrected dimension 'b'.
- Figure 7.2 QFN80 PCB Land Pattern Drawing on page 131 corrected dimension 'X1'.

Revision 0.5

February, 2018

- 4.1 Electrical Characteristics updated with latest characterization data and production test limits.
- Added 4.1.3 Thermal Characteristics.
- Added 4.2 Typical Performance Curves section.
- Corrected OPA / VDAC output connections in Figure 5.14 APORT Connection Diagram on page 115.

Revision 0.1

May 1st, 2017

Initial release.

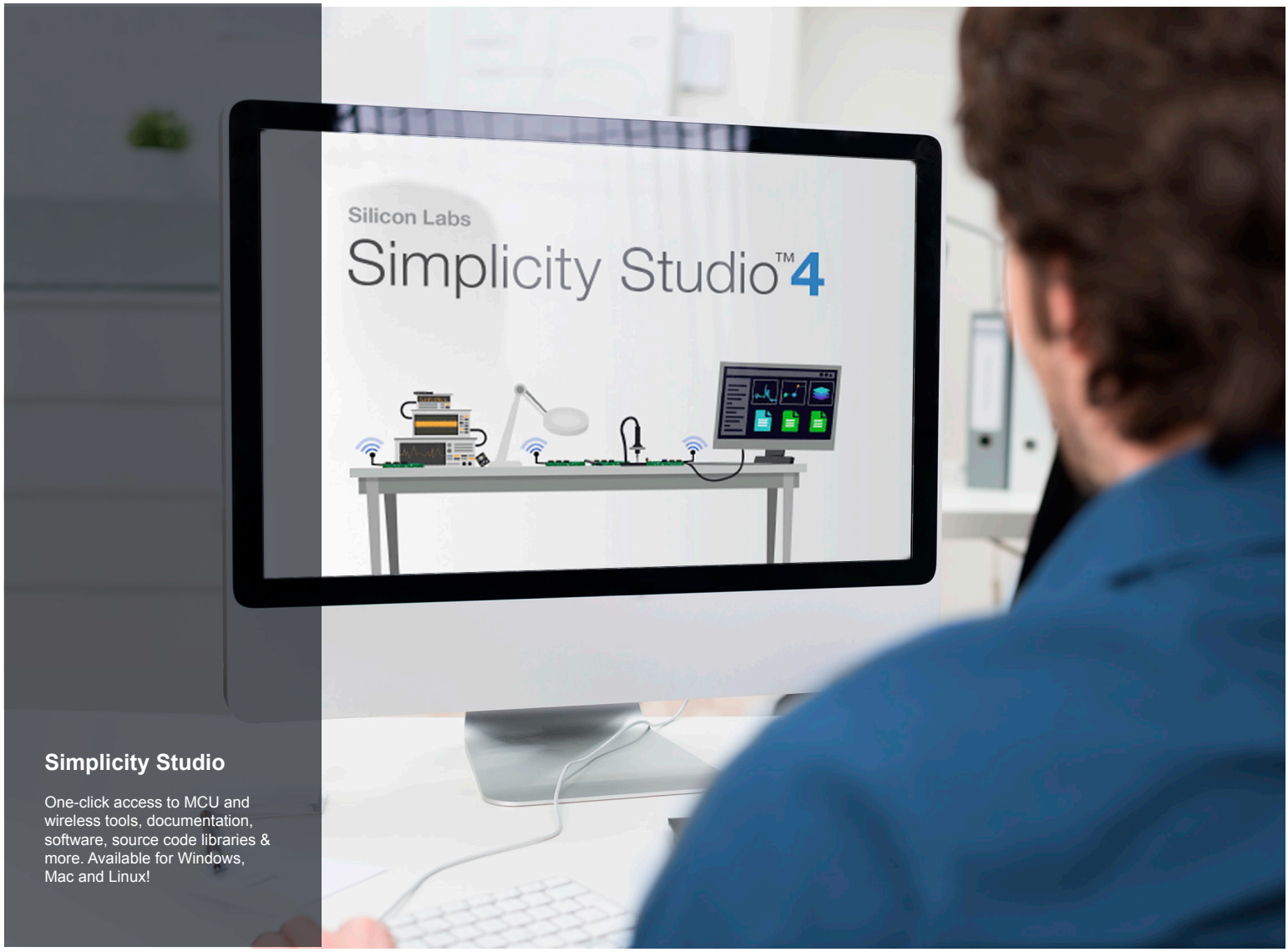

Simplicity Studio

One-click access to MCU and wireless tools, documentation, software, source code libraries & more. Available for Windows, Mac and Linux!

IoT Portfolio
www.silabs.com/IoT

SW/HW
www.silabs.com/simplicity

Quality
www.silabs.com/quality

Support and Community
community.silabs.com

Disclaimer
Silicon Labs intends to provide customers with the latest, accurate, and in-depth documentation of all peripherals and modules available for system and software implementers using or intending to use the Silicon Labs products. Characterization data, available modules and peripherals, memory sizes and memory addresses refer to each specific device, and "Typical" parameters provided can and do vary in different applications. Application examples described herein are for illustrative purposes only. Silicon Labs reserves the right to make changes without further notice and limitation to product information, specifications, and descriptions herein, and does not give warranties as to the accuracy or completeness of the included information. Silicon Labs shall have no liability for the consequences of use of the information supplied herein. This document does not imply or express copyright licenses granted hereunder to design or fabricate any integrated circuits. The products are not designed or authorized to be used within any Life Support System without the specific written consent of Silicon Labs. A "Life Support System" is any product or system intended to support or sustain life and/or health, which, if it fails, can be reasonably expected to result in significant personal injury or death. Silicon Labs products are not designed or authorized for military applications. Silicon Labs products shall under no circumstances be used in weapons of mass destruction including (but not limited to) nuclear, biological or chemical weapons, or missiles capable of delivering such weapons.

Trademark Information
Silicon Laboratories Inc.® , Silicon Laboratories®, Silicon Labs®, SiLabs® and the Silicon Labs logo®, Bluegiga®, Bluegiga Logo®, Clockbuilder®, CMEMS®, DSPLL®, EFM®, EFM32®, EFR, Ember®, Energy Micro, Energy Micro logo and combinations thereof, "the world's most energy friendly microcontrollers", Ember®, EZLink®, EZRadio®, EZRadioPRO®, Gecko®, ISOmodem®, Micrium, Precision32®, ProSLIC®, Simplicity Studio®, SiPHY®, Telegesis, the Telegesis Logo®, USBXpress®, Zentri, Z-Wave, and others are trademarks or registered trademarks of Silicon Labs. ARM, CORTEX, Cortex-M3 and THUMB are trademarks or registered trademarks of ARM Holdings. Keil is a registered trademark of ARM Limited. All other products or brand names mentioned herein are trademarks of their respective holders.

SILICON LABS

Silicon Laboratories Inc.
400 West Cesar Chavez
Austin, TX 78701
USA

http://www.silabs.com

Looking for pricing, stock, or lifecycle information?

Click below to explore more details on WIN SOURCE:

- View EFM32TG11B340F64GQ48-A on WIN SOURCE
- Silicon Labs Information

Optimize Your Supply Chain with WIN SOURCE Solutions

- Global Sourcing Solution
- Obsolete Management
- Cost Control Management
- Shortage Management
- Alternative Solution
- Excess Inventory Management