THE DATASHEET OF

114153

www.win-source.net 0086-755-83957316

INOX STAINLESS STEEL | RoHS | IP65 | PA | PP | PC | +80° -30° | +120° -30°

ASSEMBLY ENDS
Glass-fibre reinforced polyamide based (PA) technopolymer, black colour.

SUPPORT
Aluminium in natural colour.

GRADUATED CONTRAST SCREEN
White lacquered aluminium. It can be taken out before assembly to allow the insertion of level lines or words.

FLOAT
Technopolymer, black colour, with a built-in magnetic element to activate the electric contact when the float reaches the contact threshold located at about 55 mm above the axis of the lower screw (data referred to mineral oil type CB68, according to ISO 3498, temperature 23°C).

SPACERS
In polyamide based (PA) technopolymer. Essential in cases where the reservoir is made out of ferromagnetic material in order to prevent the interaction between the magnet and the metal mass of the reservoir.

BRACKET WITH SENSORS
Watertight glass-fibre reinforced polyamide based (PA) technopolymer, black colour.

SWIVELLING CONNECTOR
With built-in cable gland and contact holder. Front or axial output (high or low) ensuring protection against water sprays (protection class IP 65 according to table EN 60529 on page A-19).

STANDARD EXECUTIONS
See configuration table.

SPECIAL EXECUTIONS ON REQUEST
- Column level window in transparent methylmatacrylate (PMMA) for max 70°C use.
- Indicators with level visibility (e) up to 1429 mm and fixing holes with hole centre distance (f) up to 1500 mm.
- Packing rings in special material depending on the customer's needs.
- Special screw with nickel-plated brass tap to be fitted to the lower assembly end for any maintenance operation requiring the indicator exclusion.

FEATURES AND PERFORMANCES
Thanks to the side output of the connector, HCK-E-ST/STL level indicator allows to minimise the level of intervention of the sensor.

TECHNICAL DATA
In laboratory tests carried out for a relatively limited time with the following liquids at a temperature of 23° C: mineral oil type CB68 (according to ISO 3498) for HCK, mineral oil type CB68 (according to ISO 3498) water or water/glycol-based solutions (50%) for HCK-GL, the resistance values were much higher than 35 bar.
For use with other fluids and under different pressure and temperature conditions, please contact ELESA Technical Department.
In any case we suggest to verify the suitability of the product under the actual working conditions.

Conversion Table
1 mm = 0.039 inch

METRIC

f	L	e	d'-0.2	f'	C# [Nm]	⚖
127	164	56	12.5	127±0.5	12	231
176	213	105	12.5	176±0.5	12	261
254	291	183	12.5	254±0.5	12	309
381	418	310	12.5	381±0.5	12	388
508	545	437	12.5	508±0.5	12	466

Maximum tightening torque.

ELESA Original design

Spacers

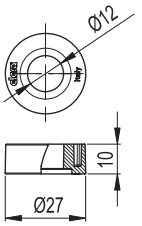

Drilling template
Holes without burrs and chamfer

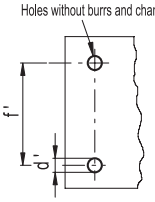

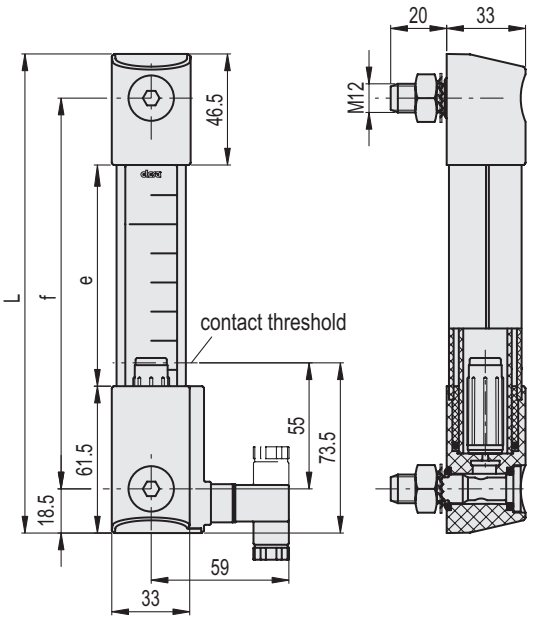

Models all rights reserved in accordance with the law. Always mention the source when reproducing our drawings and photos.

FUNCTIONING OF THE MIN LEVEL ELECTRICAL SENSOR

- NO: the electrical contact closes on reaching the minimum level.
- NC: the electrical contact is opened when it reaches the minimum level.
- SW (change-over electrical contact): the electrical contact switches between the two terminals.

Electrical features	MIN level sensor
Power supply	AC/DC
Electric contacts	NO normally open NC normally closed SW change-over contact
Maximum applicable voltage	NO: 140 Vac, 200 Vdc NC: 140Vac, 150 Vdc SW: 140Vac, 150 Vdc
Maximum switching current	1 A
Maximum current	NO: 1.2A NC: 2A SW: 2A
Maximum commutable power	NO: 10 Va NC: 20 Va SW: 20 Va
Cable gland	Pg 7 (for cables in sheath with Ø 6 or 7 mm)
Conductors cross-section	Max. 1.5 mm^2
Do not mount this indicator in proximity to magnetic fields.	

FUNCTIONING OF THE MAX TEMPERATURE SENSOR

- NO: the electrical contact closes when the pre-set temperature is reached at 80°C.
- NC: the electrical contact opens when the pre-set temperature at 80°C is reached.

Electrical features	MAX temperature sensor	
Power supply	AC/DC	
Electric contacts	NO normally open NC normally closed	
Voltage / Maximum current	250 Vac - 2 A	(resistive loads)
	115 Vac- 3A	
	24 Vdc - 3 A	
	12 Vdc - 4 A	
Minimum current	50 mA	
Cable gland	Pg 7 (for cables in sheath with Ø 6 or 7 mm)	
Conductors cross-section	Max. 1.5 mm^2	

FUNCTIONING OF THE TEMPERATURE ELECTRICAL PROBE

The working principle of the temperature probe is to measure the variation of resistance of a platinum element: 100 ohm = 0°C, 138.4 ohm = 100°C.
The function between temperature (T) and resistance (R) is approximately linear over a small temperature range: for example, if you assume that it is linear over the 0° to 100°C range, the error at 50°C is 0.4°C.
For precision measurement, it is necessary to linearise the resistance to give an accurate temperature. The most recent definition of the function between resistance and temperature is International Temperature Standard 90 (ITS-90). The function between resistance and temperature, obtained in laboratory tests, measuring directly the resistance value on the contacts is shown in the graph. We suggest, anyway, to set the system in order to compensate both heat dissipation and cable resistance.

Resistance / temperature conversion graph

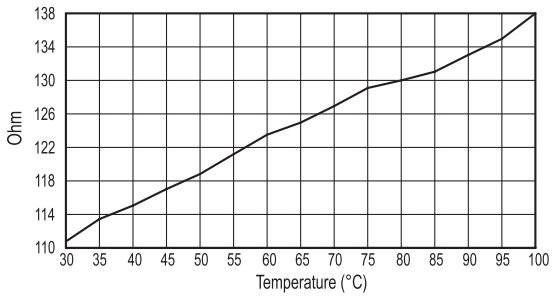

A 1°C temperature change will cause a 0.384 ohm change in resistance, so even a small error in measurement of the resistance (for example, the resistance of the wires leading to the sensor) can cause a large error in the measurement of the temperature.
Because of the low signal levels, it is important to keep any cables away from electric cables, motors, switchgear and other devices that may emit magnetic or electrical noise. Using screened cable, with the screen grounded at one end, may help to reduce interference.
When using long cables, it is necessary to check that the measuring equipment is able to handle the cable resistance.

Electrical features	Temperature probe
Power supply	AC/DC
Maximum current	1mA
Cable gland	Pg 7 (for cables in sheath with Ø 6 or 7 mm)
Conductors cross-section	Max. 1.5 mm^2
Do not mount this indicator in proximity to magnetic fields.	

Models all rights reserved in accordance with the law. Always mention the source when reproducing our drawings and photos.

CONNECTOR ASSEMBLY INSTRUCTIONS

1. Remove the connector from the indicator by unscrewing the set screw placed on the connector, take the contact holders out and loosen the cable gland.
2. See Fig.3 to proceed with the wiring according to the chosen product.
3. Assemble by pressing the contact holder into the connector in the required position.
4. Screw the connectors to the indicator and then tighten the cable glands.

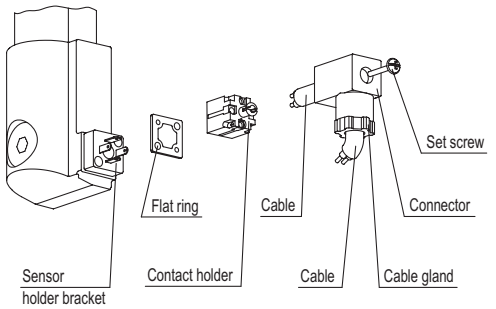

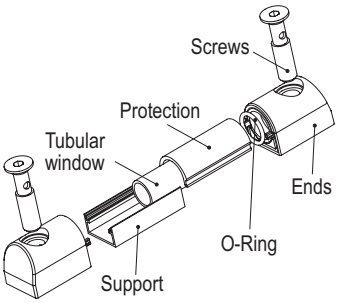

Fig.3

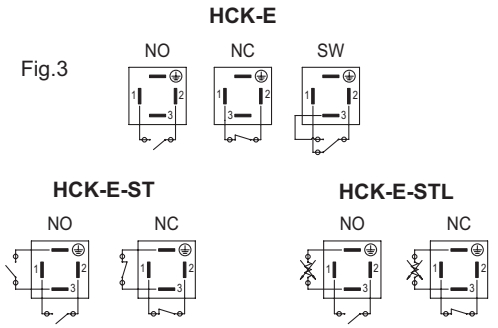

TABLE FOR THE CONFIGURATION OF THE STANDARD EXECUTIONS

HCK.	-	127	-	ZN	M12	-	NBR	-	PC	-	P	-	E	-	NO	-	ST80-NO
		①		②			③		④		⑤		⑥		⑦		⑧

① Hole centre distance (f)	127	127 mm
	176	176 mm
	254	254 mm
	381	381 mm
	508	508 mm

② Screws, nuts and washers	ZN	Zinc-plated steel.
	SST	AISI 303 stainless steel screws, AISI 304 stainless steel nuts and washers.
	SST316	AISI 316 stainless steel.

③ Packing rings	NBR	NBR synthetic rubber O-Ring for use with maximum continuous working temperature 100°C.
	FKM	FKM synthetic rubber O-Ring type VITON® for use with maximum continuous working temperature 130°C.

④ Level tubular window	PC	Polycarbonate transparent tube for use with oil.
	GL	Borosilicate glass transparent tube for use with oil, water or water/glycol-based solutions (50%).

⑤ Transparent front protection	P	Polycarbonate (PC). Removable for cleaning operations.

VITON® Registered trademark by DuPont Dow Elastomers.

⑥ MIN level sensor	E	Polypropylene based (PP) technopolymer float, maximum continuous working temperature 80°C.
	EHT #	Glass-fibre reinforced polyamide based (PA) technopolymer float, maximum continuous working temperature 120°C.

⑦ MIN level electrical contact	NO	Electric contact normally open that closes when the minimum level is reached.
	NC	Electric contact normally closed that opens when the minimum level is reached.
	SW	Change-over electrical contact that switches between the two terminals.

⑧ Sensor / Temperature probe	80-NO *	MAX temperature electrical sensor (80°C) with electric contacts normally open.
	80-NC **	MAX temperature electrical sensor (80°C) with electric contacts normally closed.
	STL ***	PT100 temperature electrical probe.

For execution FKM paragraph 3.
* For execution NO paragraph 7.
** For execution NC paragraph 7.
*** For executions NO and NC paragraph 7.

Models all rights reserved in accordance with the law. Always mention the source when reproducing our drawings and photos.

* See table for the configuration of the standard executions.

HCK-ZN-NBR-PC-P-E		HCK-ZN-FKM-PC-P-E		HCK-ZN-FKM-PC-P-E-HT	
Code	Description*	Code	Description*	Code	Description*
113011	HCK.127-ZN-M12-NBR-PC-P-E-NC	113141	HCK.127-ZN-M12-FKM-PC-P-E-NC	113159	HCK.127-ZN-M12-FKM-PC-P-EHT-NC
113019	HCK.127-ZN-M12-NBR-PC-P-E-NC-80-NC	113149	HCK.127-ZN-M12-FKM-PC-P-E-NC-80-NC	113167	HCK.127-ZN-M12-FKM-PC-P-EHT-NC-80-NC
113025	HCK.127-ZN-M12-NBR-PC-P-E-NC-STL	113155	HCK.127-ZN-M12-FKM-PC-P-E-NC-STL	113173	HCK.127-ZN-M12-FKM-PC-P-EHT-NC-STL
113009	HCK.127-ZN-M12-NBR-PC-P-E-NO	113139	HCK.127-ZN-M12-FKM-PC-P-E-NO	113157	HCK.127-ZN-M12-FKM-PC-P-EHT-NO
113017	HCK.127-ZN-M12-NBR-PC-P-E-NO-80-NO	113147	HCK.127-ZN-M12-FKM-PC-P-E-NO-80-NO	113165	HCK.127-ZN-M12-FKM-PC-P-EHT-NO-80-NO
113023	HCK.127-ZN-M12-NBR-PC-P-E-NO-STL	113153	HCK.127-ZN-M12-FKM-PC-P-E-NO-STL	113171	HCK.127-ZN-M12-FKM-PC-P-EHT-NO-STL
113013	HCK.127-ZN-M12-NBR-PC-P-E-SW	113143	HCK.127-ZN-M12-FKM-PC-P-E-SW	113161	HCK.127-ZN-M12-FKM-PC-P-EHT-SW
114011	HCK.176-ZN-M12-NBR-PC-P-E-NC	114141	HCK.176-ZN-M12-FKM-PC-P-E-NC	114159	HCK.176-ZN-M12-FKM-PC-P-EHT-NC
114019	HCK.176-ZN-M12-NBR-PC-P-E-NC-80-NC	114149	HCK.176-ZN-M12-FKM-PC-P-E-NC-80-NC	114167	HCK.176-ZN-M12-FKM-PC-P-EHT-NC-80-NC
114025	HCK.176-ZN-M12-NBR-PC-P-E-NC-STL	114155	HCK.176-ZN-M12-FKM-PC-P-E-NC-STL	114173	HCK.176-ZN-M12-FKM-PC-P-EHT-NC-STL
114009	HCK.176-ZN-M12-NBR-PC-P-E-NO	114139	HCK.176-ZN-M12-FKM-PC-P-E-NO	114157	HCK.176-ZN-M12-FKM-PC-P-EHT-NO
114017	HCK.176-ZN-M12-NBR-PC-P-E-NO-80-NO	114147	HCK.176-ZN-M12-FKM-PC-P-E-NO-80-NO	114165	HCK.176-ZN-M12-FKM-PC-P-EHT-NO-80-NO
114023	HCK.176-ZN-M12-NBR-PC-P-E-NO-STL	114153	HCK.176-ZN-M12-FKM-PC-P-E-NO-STL	114171	HCK.176-ZN-M12-FKM-PC-P-EHT-NO-STL
114013	HCK.176-ZN-M12-NBR-PC-P-E-SW	114143	HCK.176-ZN-M12-FKM-PC-P-E-SW	114161	HCK.176-ZN-M12-FKM-PC-P-EHT-SW
116111	HCK.254-ZN-M12-NBR-PC-P-E-NC	116241	HCK.254-ZN-M12-FKM-PC-P-E-NC	116259	HCK.254-ZN-M12-FKM-PC-P-EHT-NC
116119	HCK.254-ZN-M12-NBR-PC-P-E-NC-80-NC	116249	HCK.254-ZN-M12-FKM-PC-P-E-NC-80-NC	116267	HCK.254-ZN-M12-FKM-PC-P-EHT-NC-80-NC
116125	HCK.254-ZN-M12-NBR-PC-P-E-NC-STL	116255	HCK.254-ZN-M12-FKM-PC-P-E-NC-STL	116273	HCK.254-ZN-M12-FKM-PC-P-EHT-NC-STL
116109	HCK.254-ZN-M12-NBR-PC-P-E-NO	116239	HCK.254-ZN-M12-FKM-PC-P-E-NO	116257	HCK.254-ZN-M12-FKM-PC-P-EHT-NO
116117	HCK.254-ZN-M12-NBR-PC-P-E-NO-80-NO	116247	HCK.254-ZN-M12-FKM-PC-P-E-NO-80-NO	116265	HCK.254-ZN-M12-FKM-PC-P-EHT-NO-80-NO
116123	HCK.254-ZN-M12-NBR-PC-P-E-NO-STL	116253	HCK.254-ZN-M12-FKM-PC-P-E-NO-STL	116271	HCK.254-ZN-M12-FKM-PC-P-EHT-NO-STL
116113	HCK.254-ZN-M12-NBR-PC-P-E-SW	116243	HCK.254-ZN-M12-FKM-PC-P-E-SW	116261	HCK.254-ZN-M12-FKM-PC-P-EHT-SW
117011	HCK.381-ZN-M12-NBR-PC-P-E-NC	117151	HCK.381-ZN-M12-FKM-PC-P-E-NC	117169	HCK.381-ZN-M12-FKM-PC-P-EHT-NC
117019	HCK.381-ZN-M12-NBR-PC-P-E-NC-80-NC	117159	HCK.381-ZN-M12-FKM-PC-P-E-NC-80-NC	117177	HCK.381-ZN-M12-FKM-PC-P-EHT-NC-80-NC
117025	HCK.381-ZN-M12-NBR-PC-P-E-NC-STL	117165	HCK.381-ZN-M12-FKM-PC-P-E-NC-STL	117183	HCK.381-ZN-M12-FKM-PC-P-EHT-NC-STL
117009	HCK.381-ZN-M12-NBR-PC-P-E-NO	117149	HCK.381-ZN-M12-FKM-PC-P-E-NO	117167	HCK.381-ZN-M12-FKM-PC-P-EHT-NO
117017	HCK.381-ZN-M12-NBR-PC-P-E-NO-80-NO	117157	HCK.381-ZN-M12-FKM-PC-P-E-NO-80-NO	117175	HCK.381-ZN-M12-FKM-PC-P-EHT-NO-80-NO
117023	HCK.381-ZN-M12-NBR-PC-P-E-NO-STL	117163	HCK.381-ZN-M12-FKM-PC-P-E-NO-STL	117181	HCK.381-ZN-M12-FKM-PC-P-EHT-NO-STL
117013	HCK.381-ZN-M12-NBR-PC-P-E-SW	117153	HCK.381-ZN-M12-FKM-PC-P-E-SW	117171	HCK.381-ZN-M12-FKM-PC-P-EHT-SW
117911	HCK.508-ZN-M12-NBR-PC-P-E-NC	118061	HCK.508-ZN-M12-FKM-PC-P-E-NC	118079	HCK.508-ZN-M12-FKM-PC-P-EHT-NC
117919	HCK.508-ZN-M12-NBR-PC-P-E-NC-80-NC	118069	HCK.508-ZN-M12-FKM-PC-P-E-NC-80-NC	118087	HCK.508-ZN-M12-FKM-PC-P-EHT-NC-80-NC
117925	HCK.508-ZN-M12-NBR-PC-P-E-NC-STL	118075	HCK.508-ZN-M12-FKM-PC-P-E-NC-STL	118093	HCK.508-ZN-M12-FKM-PC-P-EHT-NC-STL
117909	HCK.508-ZN-M12-NBR-PC-P-E-NO	118059	HCK.508-ZN-M12-FKM-PC-P-E-NO	118077	HCK.508-ZN-M12-FKM-PC-P-EHT-NO
117917	HCK.508-ZN-M12-NBR-PC-P-E-NO-80-NO	118067	HCK.508-ZN-M12-FKM-PC-P-E-NO-80-NO	118085	HCK.508-ZN-M12-FKM-PC-P-EHT-NO-80-NO
117923	HCK.508-ZN-M12-NBR-PC-P-E-NO-STL	118073	HCK.508-ZN-M12-FKM-PC-P-E-NO-STL	118091	HCK.508-ZN-M12-FKM-PC-P-EHT-NO-STL
117913	HCK.508-ZN-M12-NBR-PC-P-E-SW	118063	HCK.508-ZN-M12-FKM-PC-P-E-SW	118081	HCK.508-ZN-M12-FKM-PC-P-EHT-SW

HCK-ZN-NBR-GL-P-E		HCK-ZN-FKM-GL-P-E		HCK-ZN-FKM-GL-P-E-HT	
113053	HCK.127-ZN-M12-NBR-GL-P-E-NC	113185	HCK.127-ZN-M12-FKM-GL-P-E-NC	113203	HCK.127-ZN-M12-FKM-GL-P-EHT-NC
113061	HCK.127-ZN-M12-NBR-GL-P-E-NC-80-NC	113193	HCK.127-ZN-M12-FKM-GL-P-E-NC-80-NC	113211	HCK.127-ZN-M12-FKM-GL-P-EHT-NC-80-NC
113067	HCK.127-ZN-M12-NBR-GL-P-E-NC-STL	113199	HCK.127-ZN-M12-FKM-GL-P-E-NC-STL	113217	HCK.127-ZN-M12-FKM-GL-P-EHT-NC-STL
113051	HCK.127-ZN-M12-NBR-GL-P-E-NO	113183	HCK.127-ZN-M12-FKM-GL-P-E-NO	113201	HCK.127-ZN-M12-FKM-GL-P-EHT-NO
113059	HCK.127-ZN-M12-NBR-GL-P-E-NO-80-NO	113191	HCK.127-ZN-M12-FKM-GL-P-E-NO-80-NO	113209	HCK.127-ZN-M12-FKM-GL-P-EHT-NO-80-NO
113065	HCK.127-ZN-M12-NBR-GL-P-E-NO-STL	113197	HCK.127-ZN-M12-FKM-GL-P-E-NO-STL	113215	HCK.127-ZN-M12-FKM-GL-P-EHT-NO-STL
113055	HCK.127-ZN-M12-NBR-GL-P-E-SW	113187	HCK.127-ZN-M12-FKM-GL-P-E-SW	113205	HCK.127-ZN-M12-FKM-GL-P-EHT-SW
114053	HCK.176-ZN-M12-NBR-GL-P-E-NC	114185	HCK.176-ZN-M12-FKM-GL-P-E-NC	114203	HCK.176-ZN-M12-FKM-GL-P-EHT-NC
114061	HCK.176-ZN-M12-NBR-GL-P-E-NC-80-NC	114193	HCK.176-ZN-M12-FKM-GL-P-E-NC-80-NC	114211	HCK.176-ZN-M12-FKM-GL-P-EHT-NC-80-NC
114067	HCK.176-ZN-M12-NBR-GL-P-E-NC-STL	114199	HCK.176-ZN-M12-FKM-GL-P-E-NC-STL	114217	HCK.176-ZN-M12-FKM-GL-P-EHT-NC-STL
114051	HCK.176-ZN-M12-NBR-GL-P-E-NO	114183	HCK.176-ZN-M12-FKM-GL-P-E-NO	114201	HCK.176-ZN-M12-FKM-GL-P-EHT-NO
114059	HCK.176-ZN-M12-NBR-GL-P-E-NO-80-NO	114191	HCK.176-ZN-M12-FKM-GL-P-E-NO-80-NO	114209	HCK.176-ZN-M12-FKM-GL-P-EHT-NO-80-NO
114065	HCK.176-ZN-M12-NBR-GL-P-E-NO-STL	114197	HCK.176-ZN-M12-FKM-GL-P-E-NO-STL	114215	HCK.176-ZN-M12-FKM-GL-P-EHT-NO-STL
114055	HCK.176-ZN-M12-NBR-GL-P-E-SW	114187	HCK.176-ZN-M12-FKM-GL-P-E-SW	114205	HCK.176-ZN-M12-FKM-GL-P-EHT-SW
116153	HCK.254-ZN-M12-NBR-GL-P-E-NC	116285	HCK.254-ZN-M12-FKM-GL-P-E-NC	116303	HCK.254-ZN-M12-FKM-GL-P-EHT-NC
116161	HCK.254-ZN-M12-NBR-GL-P-E-NC-80-NC	116293	HCK.254-ZN-M12-FKM-GL-P-E-NC-80-NC	116311	HCK.254-ZN-M12-FKM-GL-P-EHT-NC-80-NC
116167	HCK.254-ZN-M12-NBR-GL-P-E-NC-STL	116299	HCK.254-ZN-M12-FKM-GL-P-E-NC-STL	116317	HCK.254-ZN-M12-FKM-GL-P-EHT-NC-STL
116151	HCK.254-ZN-M12-NBR-GL-P-E-NO	116283	HCK.254-ZN-M12-FKM-GL-P-E-NO	116301	HCK.254-ZN-M12-FKM-GL-P-EHT-NO
116159	HCK.254-ZN-M12-NBR-GL-P-E-NO-80-NO	116291	HCK.254-ZN-M12-FKM-GL-P-E-NO-80-NO	116309	HCK.254-ZN-M12-FKM-GL-P-EHT-NO-80-NO
116165	HCK.254-ZN-M12-NBR-GL-P-E-NO-STL	116297	HCK.254-ZN-M12-FKM-GL-P-E-NO-STL	116315	HCK.254-ZN-M12-FKM-GL-P-EHT-NO-STL
116155	HCK.254-ZN-M12-NBR-GL-P-E-SW	116287	HCK.254-ZN-M12-FKM-GL-P-E-SW	116305	HCK.254-ZN-M12-FKM-GL-P-EHT-SW
117053	HCK.381-ZN-M12-NBR-GL-P-E-NC	117195	HCK.381-ZN-M12-FKM-GL-P-E-NC	117213	HCK.381-ZN-M12-FKM-GL-P-EHT-NC
117061	HCK.381-ZN-M12-NBR-GL-P-E-NC-80-NC	117203	HCK.381-ZN-M12-FKM-GL-P-E-NC-80-NC	117221	HCK.381-ZN-M12-FKM-GL-P-EHT-NC-80-NC
117067	HCK.381-ZN-M12-NBR-GL-P-E-NC-STL	117209	HCK.381-ZN-M12-FKM-GL-P-E-NC-STL	117227	HCK.381-ZN-M12-FKM-GL-P-EHT-NC-STL
117051	HCK.381-ZN-M12-NBR-GL-P-E-NO	117193	HCK.381-ZN-M12-FKM-GL-P-E-NO	117211	HCK.381-ZN-M12-FKM-GL-P-EHT-NO
117059	HCK.381-ZN-M12-NBR-GL-P-E-NO-80-NO	117201	HCK.381-ZN-M12-FKM-GL-P-E-NO-80-NO	117219	HCK.381-ZN-M12-FKM-GL-P-EHT-NO-80-NO
117065	HCK.381-ZN-M12-NBR-GL-P-E-NO-STL	117207	HCK.381-ZN-M12-FKM-GL-P-E-NO-STL	117225	HCK.381-ZN-M12-FKM-GL-P-EHT-NO-STL
117055	HCK.381-ZN-M12-NBR-GL-P-E-SW	117197	HCK.381-ZN-M12-FKM-GL-P-E-SW	117215	HCK.381-ZN-M12-FKM-GL-P-EHT-SW
117953	HCK.508-ZN-M12-NBR-GL-P-E-NC	118105	HCK.508-ZN-M12-FKM-GL-P-E-NC	118123	HCK.508-ZN-M12-FKM-GL-P-EHT-NC
117961	HCK.508-ZN-M12-NBR-GL-P-E-NC-80-NC	118113	HCK.508-ZN-M12-FKM-GL-P-E-NC-80-NC	118131	HCK.508-ZN-M12-FKM-GL-P-EHT-NC-80-NC
117967	HCK.508-ZN-M12-NBR-GL-P-E-NC-STL	118119	HCK.508-ZN-M12-FKM-GL-P-E-NC-STL	118137	HCK.508-ZN-M12-FKM-GL-P-EHT-NC-STL
117951	HCK.508-ZN-M12-NBR-GL-P-E-NO	118103	HCK.508-ZN-M12-FKM-GL-P-E-NO	118121	HCK.508-ZN-M12-FKM-GL-P-EHT-NO
117959	HCK.508-ZN-M12-NBR-GL-P-E-NO-80-NO	118111	HCK.508-ZN-M12-FKM-GL-P-E-NO-80-NO	118129	HCK.508-ZN-M12-FKM-GL-P-EHT-NO-80-NO
117965	HCK.508-ZN-M12-NBR-GL-P-E-NO-STL	118117	HCK.508-ZN-M12-FKM-GL-P-E-NO-STL	118135	HCK.508-ZN-M12-FKM-GL-P-EHT-NO-STL
117955	HCK.508-ZN-M12-NBR-GL-P-E-SW	118107	HCK.508-ZN-M12-FKM-GL-P-E-SW	118125	HCK.508-ZN-M12-FKM-GL-P-EHT-SW

Models all rights reserved in accordance with the law. Always mention the source when reproducing our drawings and photos.

* See table for the configuration of the standard executions.

INOX STAINLESS STEEL

HCK-SST-NBR-PC-P-E		HCK-SST-FKM-PC-P-E		HCK-SST-FKM-PC-P-E-HT	
Code	Description*	Code	Description*	Code	Description*
113311	HCK.127-SST-M12-NBR-PC-P-E-NC	113443	HCK.127-SST-M12-FKM-PC-P-E-NC	113461	HCK.127-SST-M12-FKM-PC-P-EHT-NC
113319	HCK.127-SST-M12-NBR-PC-P-E-NC-80-NC	113451	HCK.127-SST-M12-FKM-PC-P-E-NC-80-NC	113469	HCK.127-SST-M12-FKM-PC-P-EHT-NC-80-NC
113325	HCK.127-SST-M12-NBR-PC-P-E-NC-STL	113457	HCK.127-SST-M12-FKM-PC-P-E-NC-STL	113475	HCK.127-SST-M12-FKM-PC-P-EHT-NC-STL
113309	HCK.127-SST-M12-NBR-PC-P-E-NO	113441	HCK.127-SST-M12-FKM-PC-P-E-NO	113459	HCK.127-SST-M12-FKM-PC-P-EHT-NO
113317	HCK.127-SST-M12-NBR-PC-P-E-NO-80-NO	113449	HCK.127-SST-M12-FKM-PC-P-E-NO-80-NO	113467	HCK.127-SST-M12-FKM-PC-P-EHT-NO-80-NO
113323	HCK.127-SST-M12-NBR-PC-P-E-NO-STL	113455	HCK.127-SST-M12-FKM-PC-P-E-NO-STL	113473	HCK.127-SST-M12-FKM-PC-P-EHT-NO-STL
113313	HCK.127-SST-M12-NBR-PC-P-E-SW	113445	HCK.127-SST-M12-FKM-PC-P-E-SW	113463	HCK.127-SST-M12-FKM-PC-P-EHT-SW
114281	HCK.176-SST-M12-NBR-PC-P-E-NC	114421	HCK.176-SST-M12-FKM-PC-P-E-NC	114439	HCK.176-SST-M12-FKM-PC-P-EHT-NC
114289	HCK.176-SST-M12-NBR-PC-P-E-NC-80-NC	114429	HCK.176-SST-M12-FKM-PC-P-E-NC-80-NC	114447	HCK.176-SST-M12-FKM-PC-P-EHT-NC-80-NC
114295	HCK.176-SST-M12-NBR-PC-P-E-NC-STL	114435	HCK.176-SST-M12-FKM-PC-P-E-NC-STL	114453	HCK.176-SST-M12-FKM-PC-P-EHT-NC-STL
114279	HCK.176-SST-M12-NBR-PC-P-E-NO	114419	HCK.176-SST-M12-FKM-PC-P-E-NO	114437	HCK.176-SST-M12-FKM-PC-P-EHT-NO
114287	HCK.176-SST-M12-NBR-PC-P-E-NO-80-NO	114427	HCK.176-SST-M12-FKM-PC-P-E-NO-80-NO	114445	HCK.176-SST-M12-FKM-PC-P-EHT-NO-80-NO
114293	HCK.176-SST-M12-NBR-PC-P-E-NO-STL	114433	HCK.176-SST-M12-FKM-PC-P-E-NO-STL	114451	HCK.176-SST-M12-FKM-PC-P-EHT-NO-STL
114283	HCK.176-SST-M12-NBR-PC-P-E-SW	114423	HCK.176-SST-M12-FKM-PC-P-E-SW	114441	HCK.176-SST-M12-FKM-PC-P-EHT-SW
116391	HCK.254-SST-M12-NBR-PC-P-E-NC	116531	HCK.254-SST-M12-FKM-PC-P-E-NC	116549	HCK.254-SST-M12-FKM-PC-P-EHT-NC
116399	HCK.254-SST-M12-NBR-PC-P-E-NC-80-NC	116539	HCK.254-SST-M12-FKM-PC-P-E-NC-80-NC	116557	HCK.254-SST-M12-FKM-PC-P-EHT-NC-80-NC
116405	HCK.254-SST-M12-NBR-PC-P-E-NC-STL	116545	HCK.254-SST-M12-FKM-PC-P-E-NC-STL	116563	HCK.254-SST-M12-FKM-PC-P-EHT-NC-STL
116389	HCK.254-SST-M12-NBR-PC-P-E-NO	116529	HCK.254-SST-M12-FKM-PC-P-E-NO	116547	HCK.254-SST-M12-FKM-PC-P-EHT-NO
116397	HCK.254-SST-M12-NBR-PC-P-E-NO-80-NO	116537	HCK.254-SST-M12-FKM-PC-P-E-NO-80-NO	116555	HCK.254-SST-M12-FKM-PC-P-EHT-NO-80-NO
116403	HCK.254-SST-M12-NBR-PC-P-E-NO-STL	116543	HCK.254-SST-M12-FKM-PC-P-E-NO-STL	116561	HCK.254-SST-M12-FKM-PC-P-EHT-NO-STL
116393	HCK.254-SST-M12-NBR-PC-P-E-SW	116533	HCK.254-SST-M12-FKM-PC-P-E-SW	116551	HCK.254-SST-M12-FKM-PC-P-EHT-SW
117301	HCK.381-SST-M12-NBR-PC-P-E-NC	117441	HCK.381-SST-M12-FKM-PC-P-E-NC	117459	HCK.381-SST-M12-FKM-PC-P-EHT-NC
117309	HCK.381-SST-M12-NBR-PC-P-E-NC-80-NC	117449	HCK.381-SST-M12-FKM-PC-P-E-NC-80-NC	117467	HCK.381-SST-M12-FKM-PC-P-EHT-NC-80-NC
117315	HCK.381-SST-M12-NBR-PC-P-E-NC-STL	117455	HCK.381-SST-M12-FKM-PC-P-E-NC-STL	117473	HCK.381-SST-M12-FKM-PC-P-EHT-NC-STL
117299	HCK.381-SST-M12-NBR-PC-P-E-NO	117439	HCK.381-SST-M12-FKM-PC-P-E-NO	117457	HCK.381-SST-M12-FKM-PC-P-EHT-NO
117307	HCK.381-SST-M12-NBR-PC-P-E-NO-80-NO	117447	HCK.381-SST-M12-FKM-PC-P-E-NO-80-NO	117465	HCK.381-SST-M12-FKM-PC-P-EHT-NO-80-NO
117313	HCK.381-SST-M12-NBR-PC-P-E-NO-STL	117453	HCK.381-SST-M12-FKM-PC-P-E-NO-STL	117471	HCK.381-SST-M12-FKM-PC-P-EHT-NO-STL
117303	HCK.381-SST-M12-NBR-PC-P-E-SW	117443	HCK.381-SST-M12-FKM-PC-P-E-SW	117461	HCK.381-SST-M12-FKM-PC-P-EHT-SW
118211	HCK.508-SST-M12-NBR-PC-P-E-NC	118351	HCK.508-SST-M12-FKM-PC-P-E-NC	118369	HCK.508-SST-M12-FKM-PC-P-EHT-NC
118219	HCK.508-SST-M12-NBR-PC-P-E-NC-80-NC	118359	HCK.508-SST-M12-FKM-PC-P-E-NC-80-NC	118377	HCK.508-SST-M12-FKM-PC-P-EHT-NC-80-NC
118225	HCK.508-SST-M12-NBR-PC-P-E-NC-STL	118365	HCK.508-SST-M12-FKM-PC-P-E-NC-STL	118383	HCK.508-SST-M12-FKM-PC-P-EHT-NC-STL
118209	HCK.508-SST-M12-NBR-PC-P-E-NO	118349	HCK.508-SST-M12-FKM-PC-P-E-NO	118367	HCK.508-SST-M12-FKM-PC-P-EHT-NO
118217	HCK.508-SST-M12-NBR-PC-P-E-NO-80-NO	118357	HCK.508-SST-M12-FKM-PC-P-E-NO-80-NO	118375	HCK.508-SST-M12-FKM-PC-P-EHT-NO-80-NO
118223	HCK.508-SST-M12-NBR-PC-P-E-NO-STL	118363	HCK.508-SST-M12-FKM-PC-P-E-NO-STL	118381	HCK.508-SST-M12-FKM-PC-P-EHT-NO-STL
118213	HCK.508-SST-M12-NBR-PC-P-E-SW	118353	HCK.508-SST-M12-FKM-PC-P-E-SW	118371	HCK.508-SST-M12-FKM-PC-P-EHT-SW
HCK-SST-NBR-GL-P-E		**HCK-SST-FKM-GL-P-E**		**HCK-SST-FKM-GL-P-E-HT**	
113355	HCK.127-SST-M12-NBR-GL-P-E-NC	113485	HCK.127-SST-M12-FKM-GL-P-E-NC	113503	HCK.127-SST-M12-FKM-GL-P-EHT-NC
113363	HCK.127-SST-M12-NBR-GL-P-E-NC-80-NC	113493	HCK.127-SST-M12-FKM-GL-P-E-NC-80-NC	113511	HCK.127-SST-M12-FKM-GL-P-EHT-NC-80-NC
113369	HCK.127-SST-M12-NBR-GL-P-E-NC-STL	113499	HCK.127-SST-M12-FKM-GL-P-E-NC-STL	113517	HCK.127-SST-M12-FKM-GL-P-EHT-NC-STL
113353	HCK.127-SST-M12-NBR-GL-P-E-NO	113483	HCK.127-SST-M12-FKM-GL-P-E-NO	113501	HCK.127-SST-M12-FKM-GL-P-EHT-NO
113361	HCK.127-SST-M12-NBR-GL-P-E-NO-80-NO	113491	HCK.127-SST-M12-FKM-GL-P-E-NO-80-NO	113509	HCK.127-SST-M12-FKM-GL-P-EHT-NO-80-NO
113367	HCK.127-SST-M12-NBR-GL-P-E-NO-STL	113497	HCK.127-SST-M12-FKM-GL-P-E-NO-STL	113515	HCK.127-SST-M12-FKM-GL-P-EHT-NO-STL
113357	HCK.127-SST-M12-NBR-GL-P-E-SW	113487	HCK.127-SST-M12-FKM-GL-P-E-SW	113505	HCK.127-SST-M12-FKM-GL-P-EHT-SW
114325	HCK.176-SST-M12-NBR-GL-P-E-NC	114463	HCK.176-SST-M12-FKM-GL-P-E-NC	114481	HCK.176-SST-M12-FKM-GL-P-EHT-NC
114333	HCK.176-SST-M12-NBR-GL-P-E-NC-80-NC	114471	HCK.176-SST-M12-FKM-GL-P-E-NC-80-NC	114489	HCK.176-SST-M12-FKM-GL-P-EHT-NC-80-NC
114339	HCK.176-SST-M12-NBR-GL-P-E-NC-STL	114477	HCK.176-SST-M12-FKM-GL-P-E-NC-STL	114495	HCK.176-SST-M12-FKM-GL-P-EHT-NC-STL
114323	HCK.176-SST-M12-NBR-GL-P-E-NO	114461	HCK.176-SST-M12-FKM-GL-P-E-NO	114479	HCK.176-SST-M12-FKM-GL-P-EHT-NO
114331	HCK.176-SST-M12-NBR-GL-P-E-NO-80-NO	114469	HCK.176-SST-M12-FKM-GL-P-E-NO-80-NO	114487	HCK.176-SST-M12-FKM-GL-P-EHT-NO-80-NO
114337	HCK.176-SST-M12-NBR-GL-P-E-NO-STL	114475	HCK.176-SST-M12-FKM-GL-P-E-NO-STL	114493	HCK.176-SST-M12-FKM-GL-P-EHT-NO-STL
114327	HCK.176-SST-M12-NBR-GL-P-E-SW	114465	HCK.176-SST-M12-FKM-GL-P-E-SW	114483	HCK.176-SST-M12-FKM-GL-P-EHT-SW
116435	HCK.254-SST-M12-NBR-GL-P-E-NC	116573	HCK.254-SST-M12-FKM-GL-P-E-NC	116591	HCK.254-SST-M12-FKM-GL-P-EHT-NC
116443	HCK.254-SST-M12-NBR-GL-P-E-NC-80-NC	116581	HCK.254-SST-M12-FKM-GL-P-E-NC-80-NC	116599	HCK.254-SST-M12-FKM-GL-P-EHT-NC-80-NC
116449	HCK.254-SST-M12-NBR-GL-P-E-NC-STL	116587	HCK.254-SST-M12-FKM-GL-P-E-NC-STL	116605	HCK.254-SST-M12-FKM-GL-P-EHT-NC-STL
116433	HCK.254-SST-M12-NBR-GL-P-E-NO	116571	HCK.254-SST-M12-FKM-GL-P-E-NO	116589	HCK.254-SST-M12-FKM-GL-P-EHT-NO
116441	HCK.254-SST-M12-NBR-GL-P-E-NO-80-NO	116579	HCK.254-SST-M12-FKM-GL-P-E-NO-80-NO	116597	HCK.254-SST-M12-FKM-GL-P-EHT-NO-80-NO
116447	HCK.254-SST-M12-NBR-GL-P-E-NO-STL	116585	HCK.254-SST-M12-FKM-GL-P-E-NO-STL	116603	HCK.254-SST-M12-FKM-GL-P-EHT-NO-STL
116437	HCK.254-SST-M12-NBR-GL-P-E-SW	116575	HCK.254-SST-M12-FKM-GL-P-E-SW	116593	HCK.254-SST-M12-FKM-GL-P-EHT-SW
117345	HCK.381-SST-M12-NBR-GL-P-E-NC	117483	HCK.381-SST-M12-FKM-GL-P-E-NC	117501	HCK.381-SST-M12-FKM-GL-P-EHT-NC
117353	HCK.381-SST-M12-NBR-GL-P-E-NC-80-NC	117491	HCK.381-SST-M12-FKM-GL-P-E-NC-80-NC	117509	HCK.381-SST-M12-FKM-GL-P-EHT-NC-80-NC
117359	HCK.381-SST-M12-NBR-GL-P-E-NC-STL	117497	HCK.381-SST-M12-FKM-GL-P-E-NC-STL	117515	HCK.381-SST-M12-FKM-GL-P-EHT-NC-STL
117343	HCK.381-SST-M12-NBR-GL-P-E-NO	117481	HCK.381-SST-M12-FKM-GL-P-E-NO	117499	HCK.381-SST-M12-FKM-GL-P-EHT-NO
117351	HCK.381-SST-M12-NBR-GL-P-E-NO-80-NO	117489	HCK.381-SST-M12-FKM-GL-P-E-NO-80-NO	117507	HCK.381-SST-M12-FKM-GL-P-EHT-NO-80-NO
117357	HCK.381-SST-M12-NBR-GL-P-E-NO-STL	117495	HCK.381-SST-M12-FKM-GL-P-E-NO-STL	117513	HCK.381-SST-M12-FKM-GL-P-EHT-NO-STL
117347	HCK.381-SST-M12-NBR-GL-P-E-SW	117485	HCK.381-SST-M12-FKM-GL-P-E-SW	117503	HCK.381-SST-M12-FKM-GL-P-EHT-SW
118255	HCK.508-SST-M12-NBR-GL-P-E-NC	118393	HCK.508-SST-M12-FKM-GL-P-E-NC	118411	HCK.508-SST-M12-FKM-GL-P-EHT-NC
118263	HCK.508-SST-M12-NBR-GL-P-E-NC-80-NC	118401	HCK.508-SST-M12-FKM-GL-P-E-NC-80-NC	118419	HCK.508-SST-M12-FKM-GL-P-EHT-NC-80-NC
118269	HCK.508-SST-M12-NBR-GL-P-E-NC-STL	118407	HCK.508-SST-M12-FKM-GL-P-E-NC-STL	118425	HCK.508-SST-M12-FKM-GL-P-EHT-NC-STL
118253	HCK.508-SST-M12-NBR-GL-P-E-NO	118391	HCK.508-SST-M12-FKM-GL-P-E-NO	118409	HCK.508-SST-M12-FKM-GL-P-EHT-NO
118261	HCK.508-SST-M12-NBR-GL-P-E-NO-80-NO	118399	HCK.508-SST-M12-FKM-GL-P-E-NO-80-NO	118417	HCK.508-SST-M12-FKM-GL-P-EHT-NO-80-NO
118267	HCK.508-SST-M12-NBR-GL-P-E-NO-STL	118405	HCK.508-SST-M12-FKM-GL-P-E-NO-STL	118423	HCK.508-SST-M12-FKM-GL-P-EHT-NO-STL
118257	HCK.508-SST-M12-NBR-GL-P-E-SW	118395	HCK.508-SST-M12-FKM-GL-P-E-SW	118413	HCK.508-SST-M12-FKM-GL-P-EHT-SW

Models all rights reserved in accordance with the law. Always mention the source when reproducing our drawings and photos.

* See table for the configuration of the standard executions.

INOX STAINLESS STEEL

HCK-SST316-NBR-PC-P-E		HCK-SST316-FKM-PC-P-E		HCK-SST316-FKM-PC-P-E-HT	
Code	Description*	Code	Description*	Code	Description*
113611	HCK.127-SST316-M12-NBR-PC-P-E-NC	113743	HCK.127-SST316-M12-FKM-PC-P-E-NC	113761	HCK.127-SST316-M12-FKM-PC-P-EHT-NC
113619	HCK.127-SST316-M12-NBR-PC-P-E-NC-80-NC	113751	HCK.127-SST316-M12-FKM-PC-P-E-NC-80-NC	113769	HCK.127-SST316-M12-FKM-PC-P-EHT-NC-80-NC
113625	HCK.127-SST316-M12-NBR-PC-P-E-NC-STL	113757	HCK.127-SST316-M12-FKM-PC-P-E-NC-STL	113775	HCK.127-SST316-M12-FKM-PC-P-EHT-NC-STL
113609	HCK.127-SST316-M12-NBR-PC-P-E-NO	113741	HCK.127-SST316-M12-FKM-PC-P-E-NO	113759	HCK.127-SST316-M12-FKM-PC-P-EHT-NO
113617	HCK.127-SST316-M12-NBR-PC-P-E-NO-80-NO	113749	HCK.127-SST316-M12-FKM-PC-P-E-NO-80-NO	113767	HCK.127-SST316-M12-FKM-PC-P-EHT-NO-80-NO
113623	HCK.127-SST316-M12-NBR-PC-P-E-NO-STL	113755	HCK.127-SST316-M12-FKM-PC-P-E-NO-STL	113773	HCK.127-SST316-M12-FKM-PC-P-EHT-NO-STL
113613	HCK.127-SST316-M12-NBR-PC-P-E-SW	113745	HCK.127-SST316-M12-FKM-PC-P-E-SW	113763	HCK.127-SST316-M12-FKM-PC-P-EHT-SW
114581	HCK.176-SST316-M12-NBR-PC-P-E-NC	114721	HCK.176-SST316-M12-FKM-PC-P-E-NC	114739	HCK.176-SST316-M12-FKM-PC-P-EHT-NC
114589	HCK.176-SST316-M12-NBR-PC-P-E-NC-80-NC	114729	HCK.176-SST316-M12-FKM-PC-P-E-NC-80-NC	114747	HCK.176-SST316-M12-FKM-PC-P-EHT-NC-80-NC
114595	HCK.176-SST316-M12-NBR-PC-P-E-NC-STL	114735	HCK.176-SST316-M12-FKM-PC-P-E-NC-STL	114753	HCK.176-SST316-M12-FKM-PC-P-EHT-NC-STL
114579	HCK.176-SST316-M12-NBR-PC-P-E-NO	114719	HCK.176-SST316-M12-FKM-PC-P-E-NO	114737	HCK.176-SST316-M12-FKM-PC-P-EHT-NO
114587	HCK.176-SST316-M12-NBR-PC-P-E-NO-80-NO	114727	HCK.176-SST316-M12-FKM-PC-P-E-NO-80-NO	114745	HCK.176-SST316-M12-FKM-PC-P-EHT-NO-80-NO
114593	HCK.176-SST316-M12-NBR-PC-P-E-NO-STL	114733	HCK.176-SST316-M12-FKM-PC-P-E-NO-STL	114751	HCK.176-SST316-M12-FKM-PC-P-EHT-NO-STL
114583	HCK.176-SST316-M12-NBR-PC-P-E-SW	114723	HCK.176-SST316-M12-FKM-PC-P-E-SW	114741	HCK.176-SST316-M12-FKM-PC-P-EHT-SW
116691	HCK.254-SST316-M12-NBR-PC-P-E-NC	116831	HCK.254-SST316-M12-FKM-PC-P-E-NC	116849	HCK.254-SST316-M12-FKM-PC-P-EHT-NC
116699	HCK.254-SST316-M12-NBR-PC-P-E-NC-80-NC	116839	HCK.254-SST316-M12-FKM-PC-P-E-NC-80-NC	116857	HCK.254-SST316-M12-FKM-PC-P-EHT-NC-80-NC
116705	HCK.254-SST316-M12-NBR-PC-P-E-NC-STL	116845	HCK.254-SST316-M12-FKM-PC-P-E-NC-STL	116863	HCK.254-SST316-M12-FKM-PC-P-EHT-NC-STL
116689	HCK.254-SST316-M12-NBR-PC-P-E-NO	116829	HCK.254-SST316-M12-FKM-PC-P-E-NO	116847	HCK.254-SST316-M12-FKM-PC-P-EHT-NO
116697	HCK.254-SST316-M12-NBR-PC-P-E-NO-80-NO	116837	HCK.254-SST316-M12-FKM-PC-P-E-NO-80-NO	116855	HCK.254-SST316-M12-FKM-PC-P-EHT-NO-80-NO
116703	HCK.254-SST316-M12-NBR-PC-P-E-NO-STL	116843	HCK.254-SST316-M12-FKM-PC-P-E-NO-STL	116861	HCK.254-SST316-M12-FKM-PC-P-EHT-NO-STL
116693	HCK.254-SST316-M12-NBR-PC-P-E-SW	116833	HCK.254-SST316-M12-FKM-PC-P-E-SW	116851	HCK.254-SST316-M12-FKM-PC-P-EHT-SW
117601	HCK.381-SST316-M12-NBR-PC-P-E-NC	117741	HCK.381-SST316-M12-FKM-PC-P-E-NC	117759	HCK.381-SST316-M12-FKM-PC-P-EHT-NC
117609	HCK.381-SST316-M12-NBR-PC-P-E-NC-80-NC	117749	HCK.381-SST316-M12-FKM-PC-P-E-NC-80-NC	117767	HCK.381-SST316-M12-FKM-PC-P-EHT-NC-80-NC
117615	HCK.381-SST316-M12-NBR-PC-P-E-NC-STL	117755	HCK.381-SST316-M12-FKM-PC-P-E-NC-STL	117773	HCK.381-SST316-M12-FKM-PC-P-EHT-NC-STL
117599	HCK.381-SST316-M12-NBR-PC-P-E-NO	117739	HCK.381-SST316-M12-FKM-PC-P-E-NO	117757	HCK.381-SST316-M12-FKM-PC-P-EHT-NO
117607	HCK.381-SST316-M12-NBR-PC-P-E-NO-80-NO	117747	HCK.381-SST316-M12-FKM-PC-P-E-NO-80-NO	117765	HCK.381-SST316-M12-FKM-PC-P-EHT-NO-80-NO
117613	HCK.381-SST316-M12-NBR-PC-P-E-NO-STL	117753	HCK.381-SST316-M12-FKM-PC-P-E-NO-STL	117771	HCK.381-SST316-M12-FKM-PC-P-EHT-NO-STL
117603	HCK.381-SST316-M12-NBR-PC-P-E-SW	117743	HCK.381-SST316-M12-FKM-PC-P-E-SW	117761	HCK.381-SST316-M12-FKM-PC-P-EHT-SW
118511	HCK.508-SST316-M12-NBR-PC-P-E-NC	118651	HCK.508-SST316-M12-FKM-PC-P-E-NC	118669	HCK.508-SST316-M12-FKM-PC-P-EHT-NC
118519	HCK.508-SST316-M12-NBR-PC-P-E-NC-80-NC	118659	HCK.508-SST316-M12-FKM-PC-P-E-NC-80-NC	118677	HCK.508-SST316-M12-FKM-PC-P-EHT-NC-80-NC
118525	HCK.508-SST316-M12-NBR-PC-P-E-NC-STL	118665	HCK.508-SST316-M12-FKM-PC-P-E-NC-STL	118683	HCK.508-SST316-M12-FKM-PC-P-EHT-NC-STL
118509	HCK.508-SST316-M12-NBR-PC-P-E-NO	118649	HCK.508-SST316-M12-FKM-PC-P-E-NO	118667	HCK.508-SST316-M12-FKM-PC-P-EHT-NO
118517	HCK.508-SST316-M12-NBR-PC-P-E-NO-80-NO	118657	HCK.508-SST316-M12-FKM-PC-P-E-NO-80-NO	118675	HCK.508-SST316-M12-FKM-PC-P-EHT-NO-80-NO
118523	HCK.508-SST316-M12-NBR-PC-P-E-NO-STL	118663	HCK.508-SST316-M12-FKM-PC-P-E-NO-STL	118681	HCK.508-SST316-M12-FKM-PC-P-EHT-NO-STL
118513	HCK.508-SST316-M12-NBR-PC-P-E-SW	118653	HCK.508-SST316-M12-FKM-PC-P-E-SW	118671	HCK.508-SST316-M12-FKM-PC-P-EHT-SW
HCK-SST316-NBR-GL-P-E		**HCK-SST316-FKM-GL-P-E**		**HCK-SST316-FKM-GL-P-E-HT**	
113655	HCK.127-SST316-M12-NBR-GL-P-E-NC	113785	HCK.127-SST316-M12-FKM-GL-P-E-NC	113803	HCK.127-SST316-M12-FKM-GL-P-EHT-NC
113663	HCK.127-SST316-M12-NBR-GL-P-E-NC-80-NC	113793	HCK.127-SST316-M12-FKM-GL-P-E-NC-80-NC	113811	HCK.127-SST316-M12-FKM-GL-P-EHT-NC-80-NC
113669	HCK.127-SST316-M12-NBR-GL-P-E-NC-STL	113799	HCK.127-SST316-M12-FKM-GL-P-E-NC-STL	113817	HCK.127-SST316-M12-FKM-GL-P-EHT-NC-STL
113653	HCK.127-SST316-M12-NBR-GL-P-E-NO	113783	HCK.127-SST316-M12-FKM-GL-P-E-NO	113801	HCK.127-SST316-M12-FKM-GL-P-EHT-NO
113661	HCK.127-SST316-M12-NBR-GL-P-E-NO-80-NO	113791	HCK.127-SST316-M12-FKM-GL-P-E-NO-80-NO	113809	HCK.127-SST316-M12-FKM-GL-P-EHT-NO-80-NO
113667	HCK.127-SST316-M12-NBR-GL-P-E-NO-STL	113797	HCK.127-SST316-M12-FKM-GL-P-E-NO-STL	113815	HCK.127-SST316-M12-FKM-GL-P-EHT-NO-STL
113657	HCK.127-SST316-M12-NBR-GL-P-E-SW	113787	HCK.127-SST316-M12-FKM-GL-P-E-SW	113805	HCK.127-SST316-M12-FKM-GL-P-EHT-SW
114625	HCK.176-SST316-M12-NBR-GL-P-E-NC	114763	HCK.176-SST316-M12-FKM-GL-P-E-NC	114781	HCK.176-SST316-M12-FKM-GL-P-EHT-NC
114633	HCK.176-SST316-M12-NBR-GL-P-E-NC-80-NC	114771	HCK.176-SST316-M12-FKM-GL-P-E-NC-80-NC	114789	HCK.176-SST316-M12-FKM-GL-P-EHT-NC-80-NC
114639	HCK.176-SST316-M12-NBR-GL-P-E-NC-STL	114777	HCK.176-SST316-M12-FKM-GL-P-E-NC-STL	114795	HCK.176-SST316-M12-FKM-GL-P-EHT-NC-STL
114623	HCK.176-SST316-M12-NBR-GL-P-E-NO	114761	HCK.176-SST316-M12-FKM-GL-P-E-NO	114779	HCK.176-SST316-M12-FKM-GL-P-EHT-NO
114631	HCK.176-SST316-M12-NBR-GL-P-E-NO-80-NO	114769	HCK.176-SST316-M12-FKM-GL-P-E-NO-80-NO	114787	HCK.176-SST316-M12-FKM-GL-P-EHT-NO-80-NO
114637	HCK.176-SST316-M12-NBR-GL-P-E-NO-STL	114775	HCK.176-SST316-M12-FKM-GL-P-E-NO-STL	114793	HCK.176-SST316-M12-FKM-GL-P-EHT-NO-STL
114627	HCK.176-SST316-M12-NBR-GL-P-E-SW	114765	HCK.176-SST316-M12-FKM-GL-P-E-SW	114783	HCK.176-SST316-M12-FKM-GL-P-EHT-SW
116735	HCK.254-SST316-M12-NBR-GL-P-E-NC	116873	HCK.254-SST316-M12-FKM-GL-P-E-NC	116891	HCK.254-SST316-M12-FKM-GL-P-EHT-NC
116743	HCK.254-SST316-M12-NBR-GL-P-E-NC-80-NC	116881	HCK.254-SST316-M12-FKM-GL-P-E-NC-80-NC	116899	HCK.254-SST316-M12-FKM-GL-P-EHT-NC-80-NC
116749	HCK.254-SST316-M12-NBR-GL-P-E-NC-STL	116887	HCK.254-SST316-M12-FKM-GL-P-E-NC-STL	116905	HCK.254-SST316-M12-FKM-GL-P-EHT-NC-STL
116733	HCK.254-SST316-M12-NBR-GL-P-E-NO	116871	HCK.254-SST316-M12-FKM-GL-P-E-NO	116889	HCK.254-SST316-M12-FKM-GL-P-EHT-NO
116741	HCK.254-SST316-M12-NBR-GL-P-E-NO-80-NO	116879	HCK.254-SST316-M12-FKM-GL-P-E-NO-80-NO	116897	HCK.254-SST316-M12-FKM-GL-P-EHT-NO-80-NO
116747	HCK.254-SST316-M12-NBR-GL-P-E-NO-STL	116885	HCK.254-SST316-M12-FKM-GL-P-E-NO-STL	116903	HCK.254-SST316-M12-FKM-GL-P-EHT-NO-STL
116737	HCK.254-SST316-M12-NBR-GL-P-E-SW	116875	HCK.254-SST316-M12-FKM-GL-P-E-SW	116893	HCK.254-SST316-M12-FKM-GL-P-EHT-SW
117645	HCK.381-SST316-M12-NBR-GL-P-E-NC	117783	HCK.381-SST316-M12-FKM-GL-P-E-NC	117801	HCK.381-SST316-M12-FKM-GL-P-EHT-NC
117653	HCK.381-SST316-M12-NBR-GL-P-E-NC-80-NC	117791	HCK.381-SST316-M12-FKM-GL-P-E-NC-80-NC	117809	HCK.381-SST316-M12-FKM-GL-P-EHT-NC-80-NC
117659	HCK.381-SST316-M12-NBR-GL-P-E-NC-STL	117797	HCK.381-SST316-M12-FKM-GL-P-E-NC-STL	117815	HCK.381-SST316-M12-FKM-GL-P-EHT-NC-STL
117643	HCK.381-SST316-M12-NBR-GL-P-E-NO	117781	HCK.381-SST316-M12-FKM-GL-P-E-NO	117799	HCK.381-SST316-M12-FKM-GL-P-EHT-NO
117651	HCK.381-SST316-M12-NBR-GL-P-E-NO-80-NO	117789	HCK.381-SST316-M12-FKM-GL-P-E-NO-80-NO	117807	HCK.381-SST316-M12-FKM-GL-P-EHT-NO-80-NO
117657	HCK.381-SST316-M12-NBR-GL-P-E-NO-STL	117795	HCK.381-SST316-M12-FKM-GL-P-E-NO-STL	117813	HCK.381-SST316-M12-FKM-GL-P-EHT-NO-STL
117647	HCK.381-SST316-M12-NBR-GL-P-E-SW	117785	HCK.381-SST316-M12-FKM-GL-P-E-SW	117803	HCK.381-SST316-M12-FKM-GL-P-EHT-SW
118555	HCK.508-SST316-M12-NBR-GL-P-E-NC	118693	HCK.508-SST316-M12-FKM-GL-P-E-NC	118711	HCK.508-SST316-M12-FKM-GL-P-EHT-NC
118563	HCK.508-SST316-M12-NBR-GL-P-E-NC-80-NC	118701	HCK.508-SST316-M12-FKM-GL-P-E-NC-80-NC	118719	HCK.508-SST316-M12-FKM-GL-P-EHT-NC-80-NC
118569	HCK.508-SST316-M12-NBR-GL-P-E-NC-STL	118707	HCK.508-SST316-M12-FKM-GL-P-E-NC-STL	118725	HCK.508-SST316-M12-FKM-GL-P-EHT-NC-STL
118553	HCK.508-SST316-M12-NBR-GL-P-E-NO	118691	HCK.508-SST316-M12-FKM-GL-P-E-NO	118709	HCK.508-SST316-M12-FKM-GL-P-EHT-NO
118561	HCK.508-SST316-M12-NBR-GL-P-E-NO-80-NO	118699	HCK.508-SST316-M12-FKM-GL-P-E-NO-80-NO	118717	HCK.508-SST316-M12-FKM-GL-P-EHT-NO-80-NO
118567	HCK.508-SST316-M12-NBR-GL-P-E-NO-STL	118705	HCK.508-SST316-M12-FKM-GL-P-E-NO-STL	118723	HCK.508-SST316-M12-FKM-GL-P-EHT-NO-STL
118557	HCK.508-SST316-M12-NBR-GL-P-E-SW	118695	HCK.508-SST316-M12-FKM-GL-P-E-SW	118713	HCK.508-SST316-M12-FKM-GL-P-EHT-SW

Models all rights reserved in accordance with the law. Always mention the source when reproducing our drawings and photos.

Looking for pricing, stock, or lifecycle information?

Click below to explore more details on WIN SOURCE:

- View 114153 on WIN SOURCE
- Elesa USA Corporation Information

Optimize Your Supply Chain with WIN SOURCE Solutions

- Global Sourcing Solution
- Obsolete Management
- Cost Control Management
- Shortage Management
- Alternative Solution
- Excess Inventory Management