THE DATASHEET OF

LMV982IDGSR

www.win-source.net 0086-755-83957316

- **1.8-V, 2.7-V, and 5-V Specifications**
- **Rail-to-Rail Output Swing**
  - **600-Ω Load . . . 80 mV From Rail**
  - **2-kΩ Load . . . 30 mV From Rail**
- **V_{ICR} . . . 200 mV Beyond Rails**
- **Gain Bandwidth . . . 1.4 MHz**
- **Supply Current . . . 100 μA/Amplifier**
- **Max V_{IO} . . . 4 mV**
- **Turn-On Time From Shutdown . . . 8.4 μs**
- **Space-Saving Packages**
  - **LMV981: SOT-23-6, SC-70, and QFN**
  - **LMV982: MSOP and VSSOP**
- **Applications**
  - **Industrial (Utility/Energy Metering)**
  - **Automotive**
  - **Communications (Optical Telecom, Data/Voice Cable Modems)**
  - **Consumer Electronics (PDAs, PCs, CDR/W, Portable Audio)**
  - **Supply-Current Monitoring**
  - **Battery Monitoring**

LMV981 . . . DBV (SOT23-6) OR DCK (SC-70) PACKAGE (TOP VIEW)

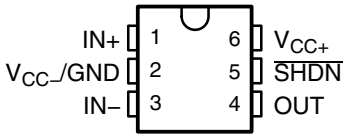

LMV981 . . . RUG (QFN) PACKAGE (TOP VIEW)

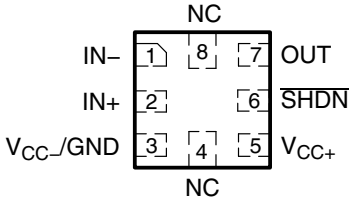

NC – No internal connection

LMV982 . . . DGS (VSSOP/MSOP) PACKAGE (TOP VIEW)

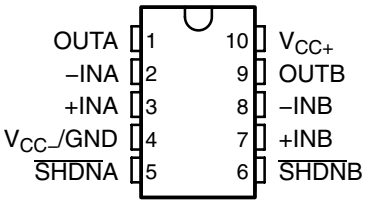

description/ordering information

The LMV981 and LMV982 devices are low-voltage, low-power operational amplifiers that are well suited for today's low-voltage and/or portable applications. Specified for operation of 1.8 V to 5 V, they can be used in portable applications that are powered from a single-cell Li-ion or two-cell batteries. They have rail-to-rail input and output capability for maximum signal swings in low-voltage applications. The LMV98x input common-mode voltage extends 200 mV beyond the rails for increased flexibility. The output can swing rail-to-rail unloaded and typically can reach 80 mV from the rails, while driving a 600-Ω load (at 1.8-V operation).

ORDERING INFORMATION†

T_A	PACKAGE‡			ORDERABLE PART NUMBER	TOP-SIDE MARKING§
–40°C to 125°C	Single	QFN (RUG)	Reel of 3000	LMV981IRUGR	R7
		SOT-23 (DBV)	Reel of 3000	LMV981IDBVR	RBA_
			Reel of 250	LMV981IDBVT	PREVIEW
		SC-70 (DCK)	Reel of 3000	LMV981IDCKR	R7_
			Reel of 250	LMV981IDCKT	PREVIEW
	Dual	MSOP/VSSOP (DGS)	Reel of 2500	LMV982IDGSR	RCB
			Reel of 250	LMV982IDGST	

† For the most current package and ordering information, see the Package Option Addendum at the end of this document, or see the TI web site at www.ti.com.
‡ Package drawings, thermal data, and symbolization are available at www.ti.com/packaging.
§ DBV/DCK: The actual top-side marking has one additional character that designates the wafer fab/assembly site.

Please be aware that an important notice concerning availability, standard warranty, and use in critical applications of Texas Instruments semiconductor products and disclaimers thereto appears at the end of this data sheet.

PRODUCTION DATA information is current as of publication date. Products conform to specifications per the terms of Texas Instruments standard warranty. Production processing does not necessarily include testing of all parameters.

Copyright © 2007, Texas Instruments Incorporated

description/ordering information (continued)

The LMV981 and LMV982 devices offer shutdown capability for additional power savings. Pulling the SHDN pin low puts the amplifiers in shutdown, where only 0.156 μA typically is consumed from a 1.8-V supply. In normal operation with the same 1.8-V supply, the devices typically consume a quiescent current of 103 μA per channel, and yet they are able to achieve excellent electrical specifications, such as 101-dB open-loop DC gain and 1.4-MHz-gain bandwidth. Furthermore, the amplifiers offer good output drive characteristics, with the ability to drive a 600-Ω load and 1000-pF capacitance, with minimal ringing.

The LMV981 and LMV982 devices are offered in the latest packaging technology to meet the most demanding space-constraint applications. The LMV981 is offered in standard SOT-23 and SC-70 packages. The LMV982 is available in the 10-pin MSOP package.

The LMV98x devices are characterized for operation from –40°C to 125°C, making them universally suited for commercial, industrial, and automotive applications.

simplified schematic

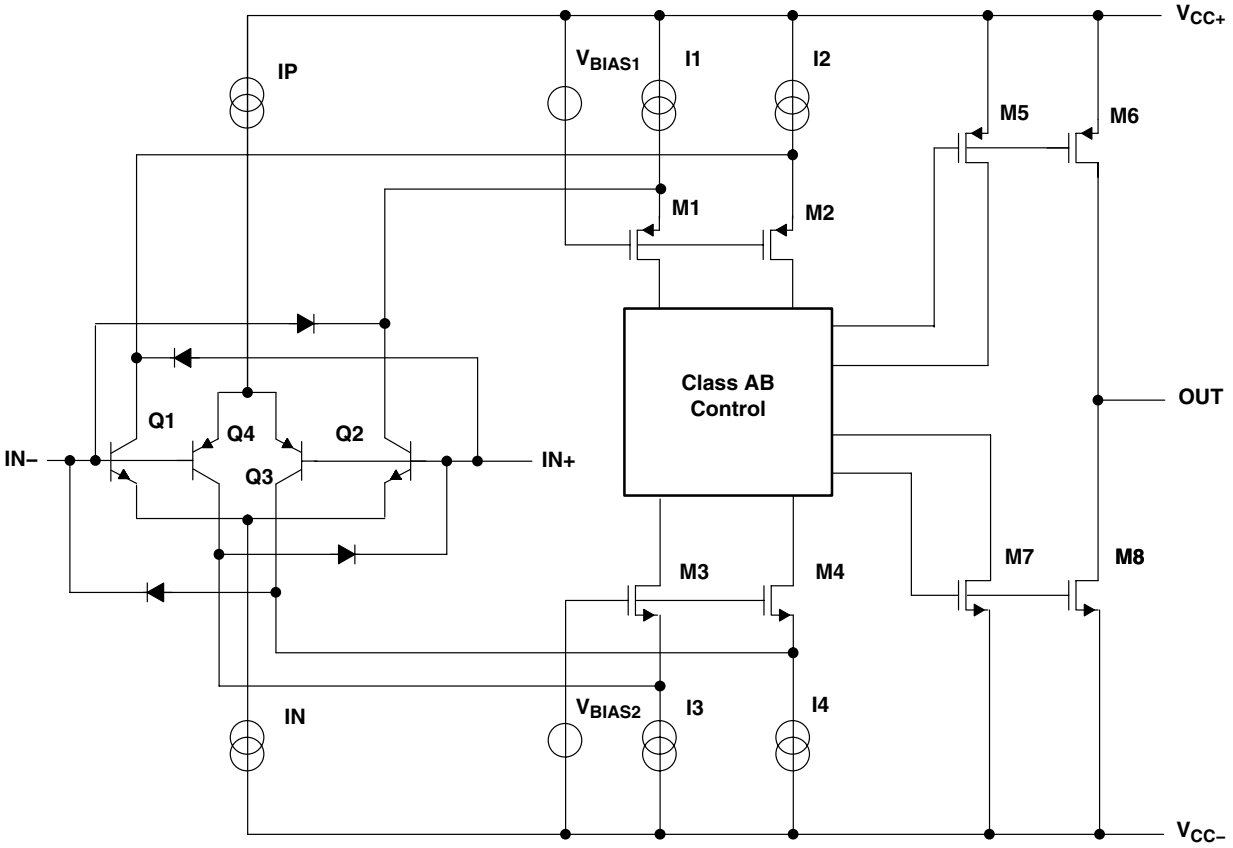

absolute maximum ratings over free-air temperature range (unless otherwise noted)†

Supply voltage, $V_{CC+} - V_{CC-}$ (see Note 1) . . . . . 5.5 V
Differential input voltage, V_{ID} (see Note 2) . . . . . Supply voltage
Input voltage range, V_I (either input) . . . . . V_{CC-} – 0.2 V to V_{CC+} + 0.2 V
Duration of output short circuit (one amplifier) to $V_{CC}\pm$ (see Notes 3 and 4) . . . . . Unlimited
Package thermal impedance, θ_{JA} (see Notes 4 and 5): DBV package . . . . . 165°C/W
DCK package . . . . . 259°C/W
DGS package . . . . . 165°C/W
RUG package . . . . . 253°C/W
Operating virtual junction temperature, T_J . . . . . 150°C
Storage temperature range, T_{stg} . . . . . –65 to 150°C

† Stresses beyond those listed under "absolute maximum ratings" may cause permanent damage to the device. These are stress ratings only, and functional operation of the device at these or any other conditions beyond those indicated under "recommended operating conditions" is not implied. Exposure to absolute-maximum-rated conditions for extended periods may affect device reliability.

NOTES:
1. All voltage values (except differential voltages and V_{CC} specified for the measurement of I_{OS}) are with respect to the network GND.
2. Differential voltages are at IN+ with respect to IN–.
3. Applies to both single-supply and split-supply operation. Continuous short-circuit operation at elevated ambient temperature can result in exceeding the maximum-allowed junction temperature of 150°C. Output currents in excess of 45 mA over long term may adversely affect reliability.
4. Maximum power dissipation is a function of $T_J(max)$, θ_{JA}, and T_A. The maximum allowable power dissipation at any allowable ambient temperature is $P_D = (T_J(max) - T_A)/\theta_{JA}$. Operating at the absolute maximum T_J of 150°C can affect reliability.
5. The package thermal impedance is calculated in accordance with JESD 51-7.

recommended operating conditions

		MIN	MAX	UNIT
V_{CC}	Supply voltage ($V_{CC+} - V_{CC-}$)	1.8	5	V
T_A	Operating free-air temperature	–40	125	°C

ESD protection

TEST CONDITIONS	TYP	UNIT
Human-Body Model	2000	V
Machine Model	200	V

electrical characteristics at T_A = 25°C, V_{CC+} = 1.8 V, V_{CC-} = 0 V, V_{IC} = V_{CC+}/2, V_O = V_{CC+}/2, R_L > 1 MΩ, and SHDN tied to V_{CC+} (unless otherwise noted)

PARAMETER		TEST CONDITIONS		T_A	MIN	TYP	MAX	UNIT
V_{IO}	Input offset voltage	LMV981 (single)		25°C		1	4	mV
				Full range			6	
		LMV982 (dual)		25°C		1	5.5	
				Full range			7.5	
$\alpha_{V_{IO}}$	Average temperature coefficient of input offset voltage			25°C		5.5		μV/°C
I_{IB}	Input bias current	$V_{IC} = V_{CC+} - 0.8$ V		25°C		15	35	nA
				25°C			65	
				Full range			75	
I_{IO}	Input offset current			25°C		13	25	nA
				Full range			40	
I_{CC}	Supply current (per channel)			25°C		103	185	μA
				Full range			205	
		In shutdown	LMV981	25°C		0.156	1	
				Full range			2	
			LM982	25°C		0.178	3.5	
				Full range			5	
CMRR	Common-mode rejection ratio	$0 \le V_{IC} \le 0.6$ V, $1.4 \text{ V} \le V_{IC} \le 1.8$ V		25°C	60	78		dB
				–40°C to 85°C	55			
		$0.2 \text{ V} \le V_{IC} \le 0.6$ V, $1.4 \text{ V} \le V_{IC} \le 1.6$ V		–40°C to 125°C	55			
		$-0.2 \text{ V} \le V_{IC} \le 0$ V, $1.8 \text{ V} \le V_{IC} \le 2$ V		25°C	50	72		
k_{SVR}	Supply-voltage rejection ratio	$1.8 \text{ V} \le V_{CC+} \le 5$ V, $V_{IC} = 0.5$ V		25°C	75	100		dB
				Full range	70			
V_{ICR}	Common-mode input voltage range	CMRR ≥ 50 dB		25°C	$V_{CC-} - 0.2$	–0.2 to 2.1	$V_{CC+} + 0.2$	V
				–40°C to 85°C	V_{CC-}		V_{CC+}	
				–40°C to 125°C	$V_{CC-} + 0.2$		$V_{CC+} - 0.2$	
A_V	Large-signal voltage gain	R_L = 600 Ω to 0.9 V, V_O = 0.2 V to 1.6 V, V_{IC} = 0.5 V	LMV981	25°C	77	101		dB
				Full range	73			
		R_L = 2 kΩ to 0.9 V, V_O = 0.2 V to 1.6 V, V_{IC} = 0.5 V		25°C	80	105		
				Full range	75			
		R_L = 600 Ω to 0.9 V, V_O = 0.2 V to 1.6 V, V_{IC} = 0.5 V	LMV982	25°C	75	90		
				Full range	72			
		R_L = 2 kΩ to 0.9 V, V_O = 0.2 V to 1.6 V, V_{IC} = 0.5 V		25°C	78	100		
				Full range	75			

electrical characteristics at T_A = 25°C, V_{CC+} = 1.8 V, V_{CC-} = 0 V, V_{IC} = V_{CC+}/2, V_O = V_{CC+}/2, R_L > 1 MΩ, and SHDN tied to V_{CC+} (unless otherwise noted) (continued)

PARAMETER		TEST CONDITIONS		T_A	MIN	TYP	MAX	UNIT
V_O	Output swing	R_L = 600 Ω to 0.9 V, V_{ID} = ±100 mV	High level	25°C	1.65	1.72		V
				Full range	1.63			
			Low level	25°C		0.077	0.105	
				Full range			0.12	
		R_L = 2 kΩ to 0.9 V, V_{ID} = ±100 mV	High level	25°C	1.75	1.77		
				Full range	1.74			
			Low level	25°C		0.024	0.035	
				Full range			0.04	
I_{OS}	Output short-circuit current	V_O = 0 V, V_{ID} = 100 mV	Sourcing	25°C	4	8		mA
				Full range	3.3			
		V_O = 1.8 V, V_{ID} = –100 mV	Sinking	25°C	7	9		
				Full range	5			
T_{on}	Turn-on time from shutdown			25°C		19		µs
V_{SHDN}	Turn-on voltage to enable part			25°C		1.0		V
	Turn-off voltage					0.55		
GBW	Gain bandwidth product			25°C		1.4		MHz
SR	Slew rate	See Note 6		25°C		0.35		V/µS
Φ_m	Phase margin			25°C		67		deg
	Gain margin			25°C		7		dB
V_n	Equivalent input noise voltage	f = 1 kHz, V_{IC} = 0.5 V		25°C		60		nV/√Hz
I_n	Equivalent input noise current	f = 1 kHz		25°C		0.06		pA/√Hz
THD	Total harmonic distortion	f = 1 kHz, A_V = 1, R_L = 600 Ω, V_{ID} = 1 V_{PP}		25°C		0.023		%
	Amp-to-amp isolation	See Note 7		25°C		123		dB

NOTES: 6. Number specified is the slower of the positive and negative slew rates.
7. Input referred, V_{CC+} = 5 V and R_L = 100 kΩ connected to 2.5 V. Each amp is excited in turn with a 1-kHz signal to produce V_O = 3 V_{PP}.

electrical characteristics at T_A = 25°C, V_{CC+} = 2.7 V, V_{CC-} = 0 V, V_{IC} = V_{CC+}/2, V_O = V_{CC+}/2, R_L > 1 MΩ, and SHDN tied to V_{CC+} (unless otherwise noted)

PARAMETER			TEST CONDITIONS		T_A	MIN	TYP	MAX	UNIT
V_{IO}	Input offset voltage		LMV981 (single)		25°C		1	4	mV
					Full range			6	
			LMV982 (dual)		25°C		1	5.5	
					Full range			7.5	
$\alpha_{V_{IO}}$	Average temperature coefficient of input offset voltage				25°C		5.5		μV/°C
I_{IB}	Input bias current		V_{IC} = V_{CC+} – 0.8 V		25°C		15	35	nA
					25°C			65	
					Full range			75	
I_{IO}	Input offset current				25°C		8	25	nA
					Full range			40	
I_{CC}	Supply current (per channel)				25°C		105	190	μA
					Full range			210	
			In shutdown	LMV981	25°C		0.61	1	
					Full range			2	
				LM982	25°C		0.101	3.5	
					Full range			5	
CMRR	Common-mode rejection ratio		0 ≤ V_{IC} ≤ 1.5 V, 2.3 V ≤ V_{IC} ≤ 2.7 V		25°C	60	81		dB
					–40°C to 85°C	55			
			0.2 ≤ V_{IC} ≤ 1.5 V, 2.3 V ≤ V_{IC} ≤ 2.5 V		–40°C to 125°C	55			
			–0.2 V ≤ V_{IC} ≤ 0 V, 2.7 V ≤ V_{IC} ≤ 2.9 V		25°C	50	74		
k_{SVR}	Supply-voltage rejection ratio		1.8 V ≤ V_{CC+} ≤ 5 V, V_{IC} = 0.5 V		25°C	75	100		dB
					Full range	70			
V_{ICR}	Common-mode input voltage range		CMRR ≥ 50 dB		25°C	V_{CC-} – 0.2	–0.2 to 3.0	V_{CC+} + 0.2	V
					–40°C to 85°C	V_{CC-}		V_{CC+}	
					–40°C to 125°C	V_{CC-} + 0.2		V_{CC+} – 0.2	
A_V	Large-signal voltage gain	LMV981	R_L = 600 Ω to 1.35 V, V_O = 0.2 V to 2.5 V		25°C	87	104		dB
					Full range	86			
			R_L = 2 kΩ to 1.35 V, V_O = 0.2 V to 2.5 V		25°C	92	110		
					Full range	91			
		LMV982	R_L = 600 Ω to 1.35 V, V_O = 0.2 V to 2.5 V		25°C	78	90		
					Full range	75			
			R_L = 2 kΩ to 1.35 V, V_O = 0.2 V to 2.5 V		25°C	81	100		
					Full range	78			

characteristics at T_A = 25°C, V_{CC+} = 2.7 V, V_{CC-} = 0 V, V_{IC} = V_{CC+}/2, V_O = V_{CC+}/2, R_L > 1 MΩ, and SHDN tied to V_{CC+} (unless otherwise noted) (continued)

PARAMETER		TEST CONDITIONS		T_A	MIN	TYP	MAX	UNIT
V_O	Output swing	R_L = 600 Ω to 1.35 V, V_{ID} = ±100 mV	High level	25°C	2.55	2.62		V
				Full range	2.53			
			Low level	25°C		0.083	0.11	
				Full range			0.13	
		R_L = 2 kΩ to 1.35 V, V_{ID} = ±100 mV	High level	25°C	2.65	2.675		
				Full range	2.64			
			Low level	25°C		0.025	0.04	
				Full range			0.045	
I_{OS}	Output short-circuit current	V_O = 0 V, V_{ID} = 100 mV	Sourcing	25°C	20	30		mA
				Full range	15			
		V_O = 2.7 V, V_{ID} = –100 mV	Sinking	25°C	18	25		
				Full range	12			
T_{on}	Turn-on time from shutdown			25°C		12.5		µs
V_{SHDN}	Turn-on voltage to enable part			25°C		1.9		V
	Turn-off voltage					0.8		
GBW	Gain bandwidth product			25°C		1.4		MHz
SR	Slew rate	See Note 6		25°C		0.4		V/µS
Φ_m	Phase margin			25°C		70		deg
	Gain margin			25°C		7.5		dB
V_n	Equivalent input noise voltage	f = 1 kHz, V_{IC} = 0.5 V		25°C		57		nV/√Hz
I_n	Equivalent input noise current	f = 1 kHz		25°C		0.082		pA/√Hz
THD	Total harmonic distortion	f = 1 kHz, A_V = 1, R_L = 600 Ω, V_{ID} = 1 V_{PP}		25°C		0.022		%
	Amp-to-amp isolation	See Note 7		25°C		123		dB

NOTES: 6. Number specified is the slower of the positive and negative slew rates.
7. Input referred, V_{CC+} = 5 V and R_L = 100 kΩ connected to 2.5 V. Each amp is excited in turn with a 1-kHz signal to produce V_O = 3 V_{PP}.

electrical characteristics at T_A = 25°C, V_{CC+} = 5 V, V_{CC-} = 0 V, V_{IC} = V_{CC+}/2, V_O = V_{CC+}/2, R_L > 1 MΩ, and SHDN tied to V_{CC+} (unless otherwise noted)

PARAMETER			TEST CONDITIONS		T_A	MIN	TYP	MAX	UNIT
V_{IO}	Input offset voltage		LMV981 (single)		25°C		1	4	mV
					Full range			6	
			LMV982 (dual)		25°C		1	5.5	
					Full range			7.5	
$\alpha_{V_{IO}}$	Average temperature coefficient of input offset voltage				25°C		5.5		μV/°C
I_{IB}	Input bias current		V_{IC} = V_{CC+} – 0.8 V		25°C		15	35	nA
					25°C			65	
					Full range			75	
I_{IO}	Input offset current				25°C		9	25	nA
					Full range			40	
I_{CC}	Supply current (per channel)				25°C		116	210	μA
					Full range			230	
			In shutdown	LMV981	25°C		0.201	1	
					Full range			2	
				LM982	25°C		0.302	3.5	
					Full range			5	
CMRR	Common-mode rejection ratio		0 ≤ V_{IC} ≤ 3.8 V, 4.6 V ≤ V_{IC} ≤ 5 V		25°C	60	86		dB
					–40°C to 85°C	55			
			0.3 ≤ V_{IC} ≤ 3.8 V, 4.6 V ≤ V_{IC} ≤ 4.7 V		–40°C to 125°C	55			
			–0.2 V ≤ V_{IC} ≤ 0 V, 5 V ≤ V_{IC} ≤ 5.2 V		25°C	50	78		
k_{SVR}	Supply-voltage rejection ratio		1.8 V ≤ V_{CC+} ≤ 5 V, V_{IC} = 0.5 V		25°C	75	100		dB
					Full range	70			
V_{ICR}	Common-mode input voltage range		CMRR ≥ 50 dB		25°C	V_{CC-} – 0.2	–0.2 to 5.3	V_{CC+} + 0.2	V
					–40°C to 85°C	V_{CC-}		V_{CC+}	
					–40°C to 125°C	V_{CC-} + 0.3		V_{CC+} – 0.3	
A_V	Large-signal voltage gain	LMV981	R_L = 600 Ω to 2.5 V, V_O = 0.2 V to 4.8 V		25°C	88	102		dB
					Full range	87			
			R_L = 2 kΩ to 2.5 V, V_O = 0.2 V to 4.8 V		25°C	94	113		
					Full range	93			
		LMV982	R_L = 600 Ω to 2.5 V, V_O = 0.2 V to 4.8 V		25°C	81	90		
					Full range	78			
			R_L = 2 kΩ to 2.5 V, V_O = 0.2 V to 4.8 V		25°C	85	100		
					Full range	82			

electrical characteristics at T_A= 25°C, V_{CC+} = 5 V, V_{CC-} = 0 V, V_{IC} = V_{CC+}/2, V_O = V_{CC+}/2, R_L > 1 MΩ, and SHDN tied to V_{CC+} (unless otherwise noted) (continued)

PARAMETER		TEST CONDITIONS		T_A	MIN	TYP	MAX	UNIT
V_O	Output swing	R_L = 600 Ω to 2.5 V, V_{ID} = ±100 mV	High level	25°C	4.855	4.89		V
				Full range	4.835			
			Low level	25°C		0.12	0.16	
				Full range			0.18	
		R_L = 2 kΩ to 2.5 V, V_{ID} = ±100 mV	High level	25°C	4.945	4.967		
				Full range	4.935			
			Low level	25°C		0.037	0.065	
				Full range			0.075	
I_{OS}	Output short-circuit current	LMV981: V_O = 0 V, V_{ID} = 100 mV	Sourcing	25°C	80	100		mA
				Full range	68			
		V_O = 5 V, V_{ID} = –100 mV	Sinking	25°C	58	65		
				Full range	45			
T_{on}	Turn-on time from shutdown			25°C		8.4		µs
V_{SHDN}	Turn-on voltage to enable part			25°C		4.2		V
	Turn-off voltage					0.8		
GBW	Gain bandwidth product			25°C		1.5		MHz
SR	Slew rate	See Note 6		25°C		0.42		V/µS
Φ_m	Phase margin			25°C		71		deg
	Gain margin			25°C		8		dB
V_n	Equivalent input noise voltage	f = 1 kHz, V_{IC} = 1 V		25°C		50		nV/√Hz
I_n	Equivalent input noise current	f = 1 kHz		25°C		0.07		pA/√Hz
THD	Total harmonic distortion	f = 1 kHz, A_V = 1, R_L = 600 Ω, V_{ID} = 1 V_{PP}		25°C		0.022		%
	Amp-to-amp isolation	See Note 7		25°C		123		dB

NOTES: 6. Number specified is the slower of the positive and negative slew rates.
7. Input referred, V_{CC+} = 5 V and R_L = 100 kΩ connected to 2.5 V. Each amp is excited in turn with a 1-kHz signal to produce V_O = 3 V_{PP}.

TYPICAL PERFORMANCE CHARACTERISTICS
Unless Otherwise Specified, V_{CC+} = 5 V, Single Supply, T_A = 25°C

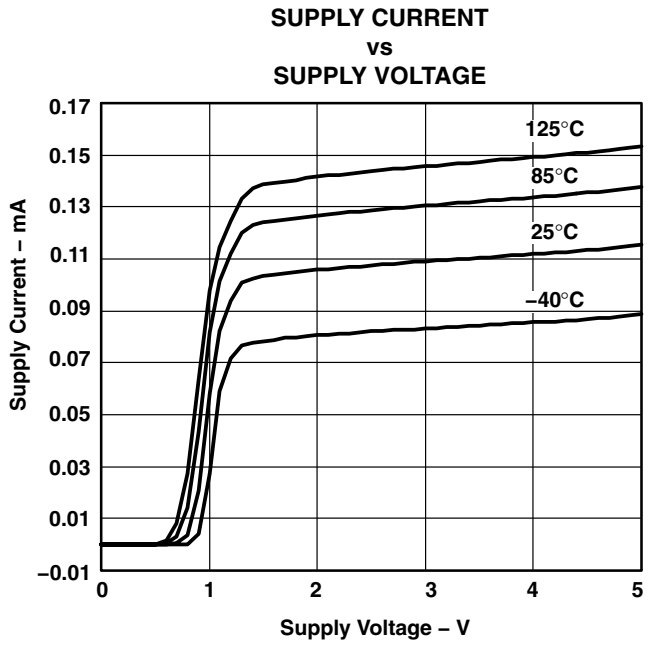

Figure 1

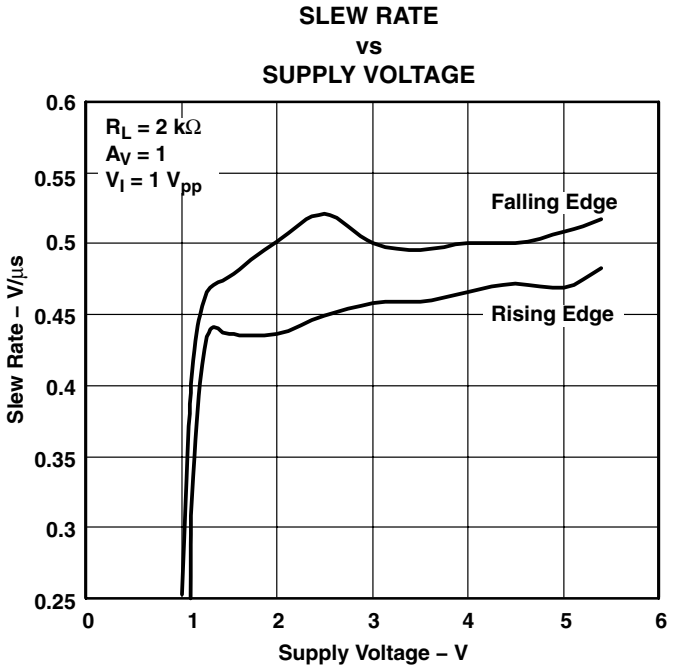

Figure 2

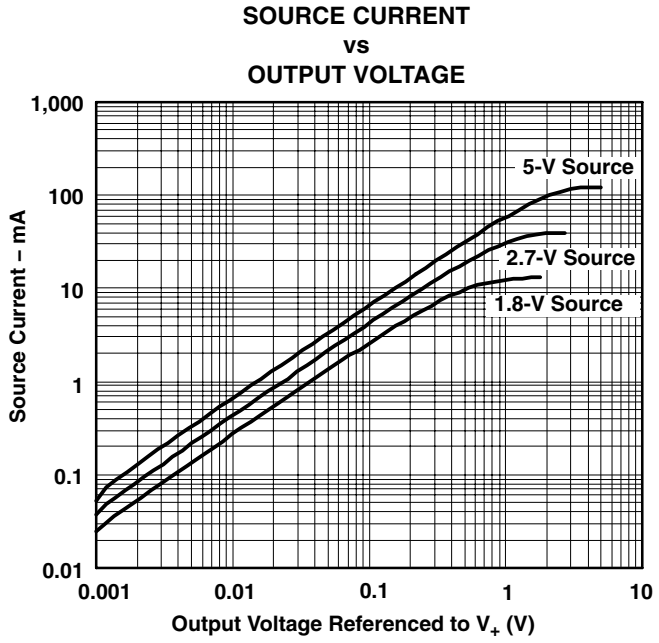

Figure 3

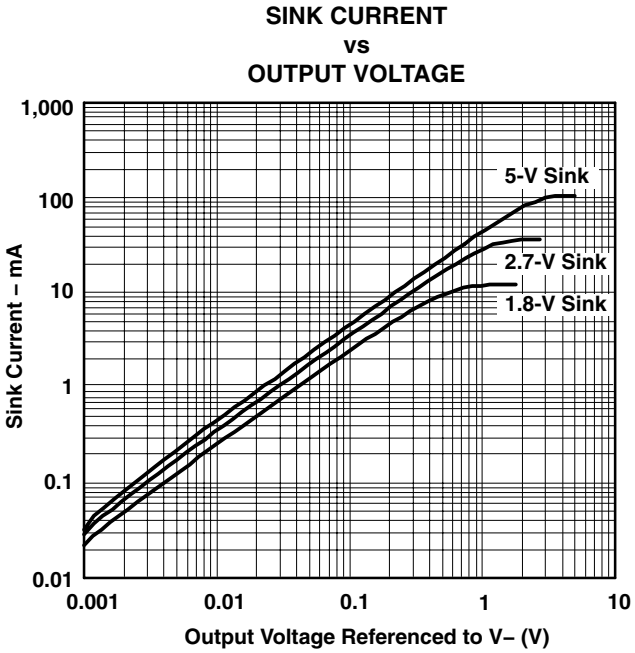

Figure 4

TYPICAL PERFORMANCE CHARACTERISTICS
Unless Otherwise Specified, V_{CC+} = 5 V, Single Supply, T_A = 25°C

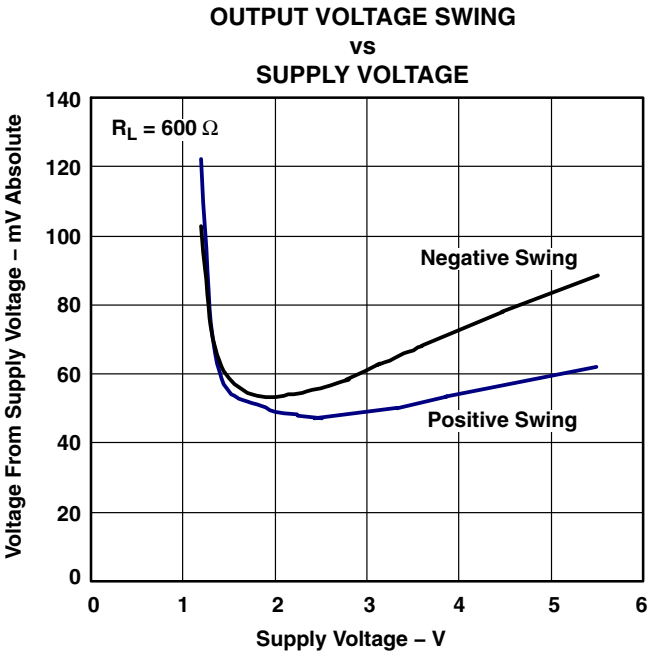

Figure 5

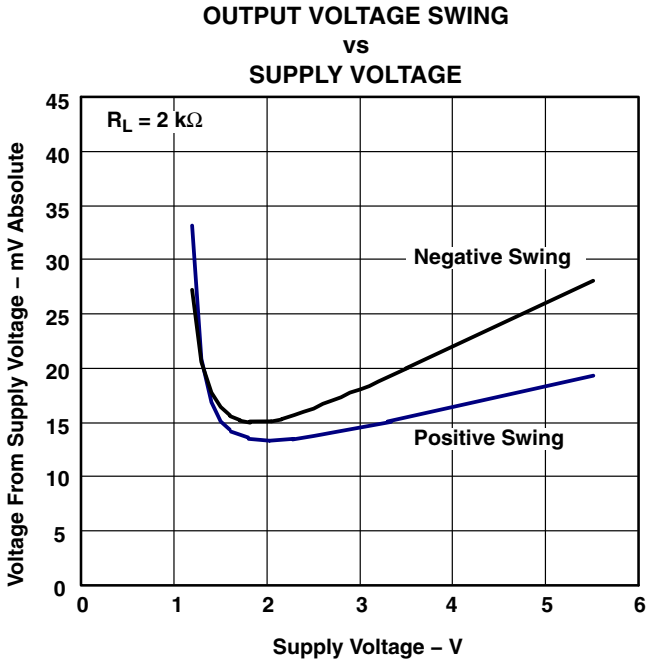

Figure 6

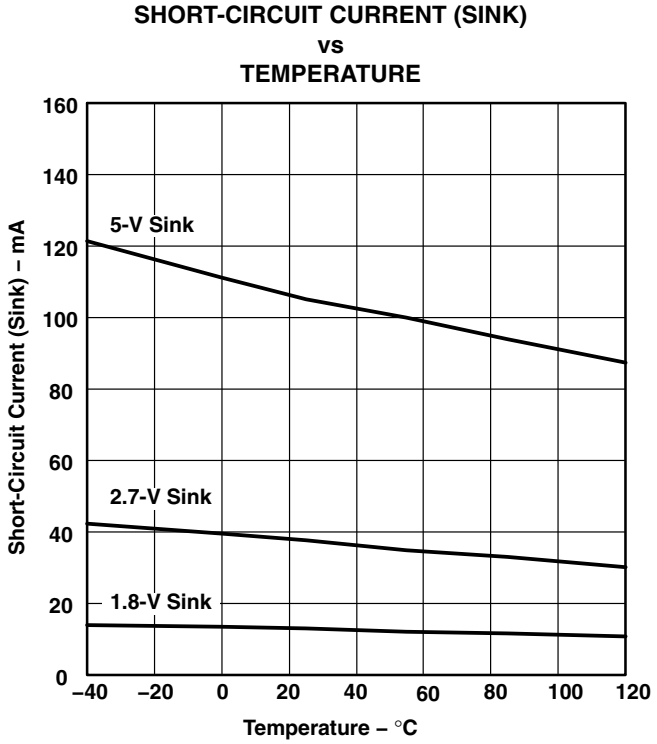

Figure 7

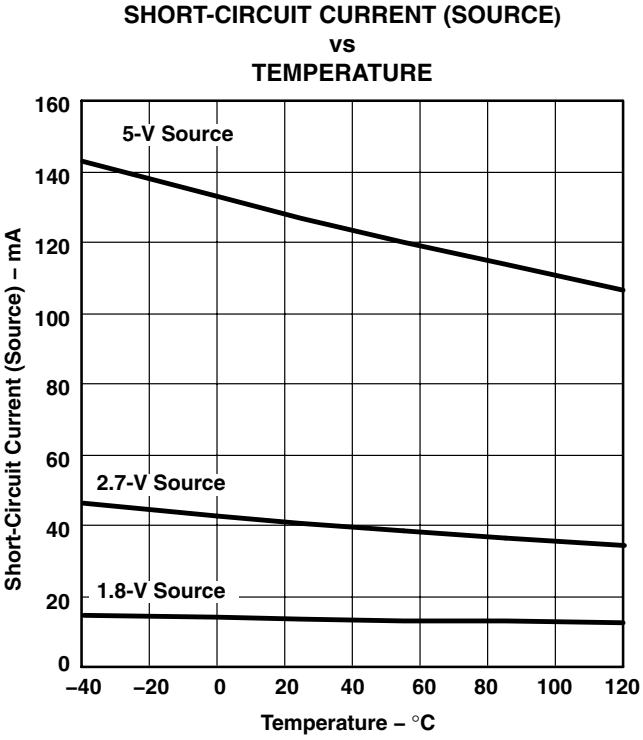

Figure 8

TYPICAL PERFORMANCE CHARACTERISTICS
Unless Otherwise Specified, V_{CC+} = 5 V, Single Supply, T_A = 25°C

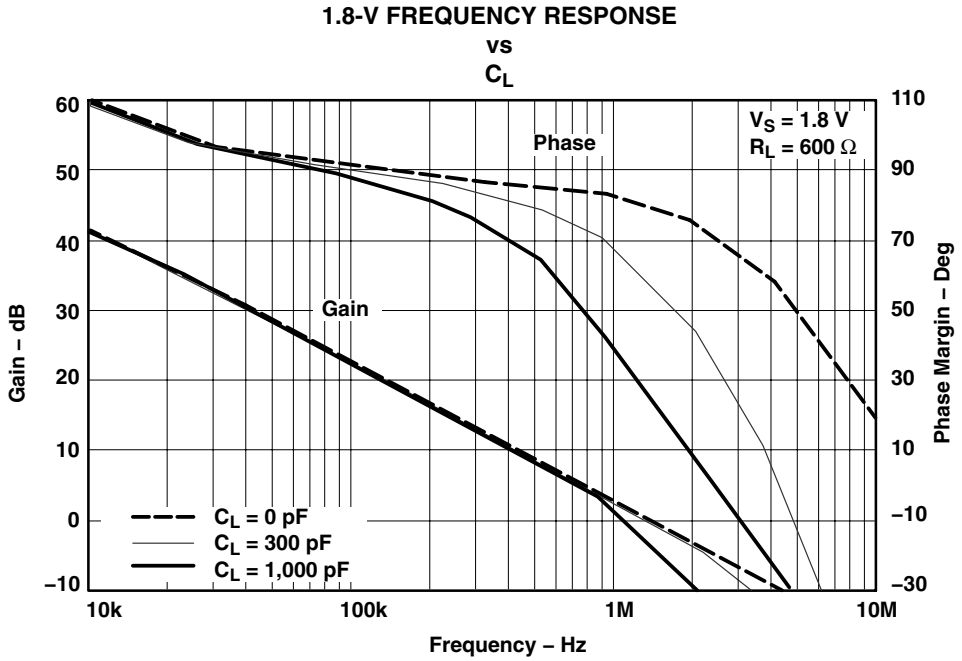

Figure 9

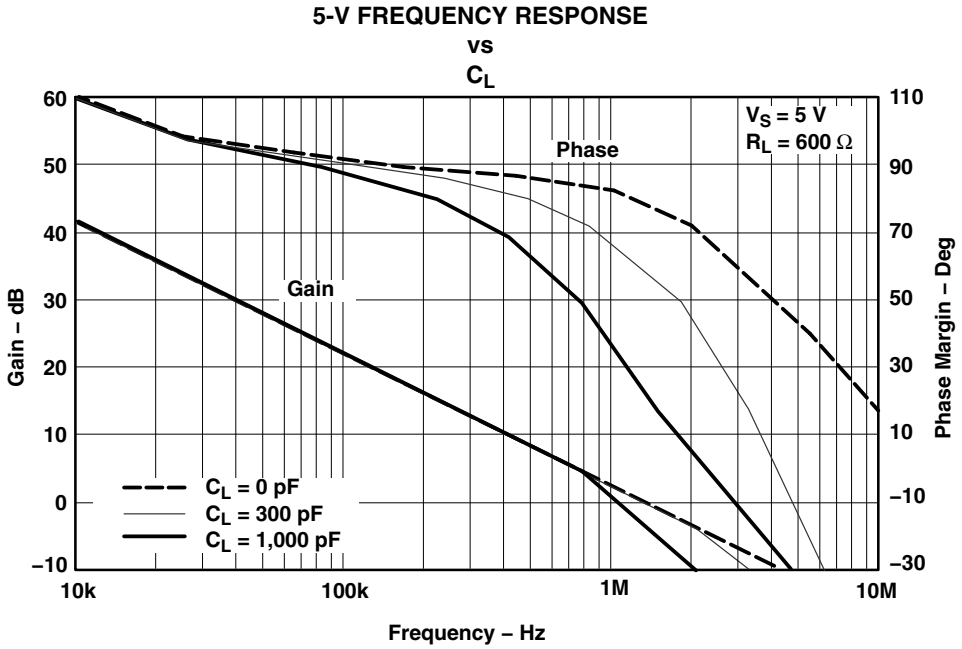

Figure 10

TYPICAL PERFORMANCE CHARACTERISTICS
Unless Otherwise Specified, V_{CC+} = 5 V, Single Supply, T_A = 25°C

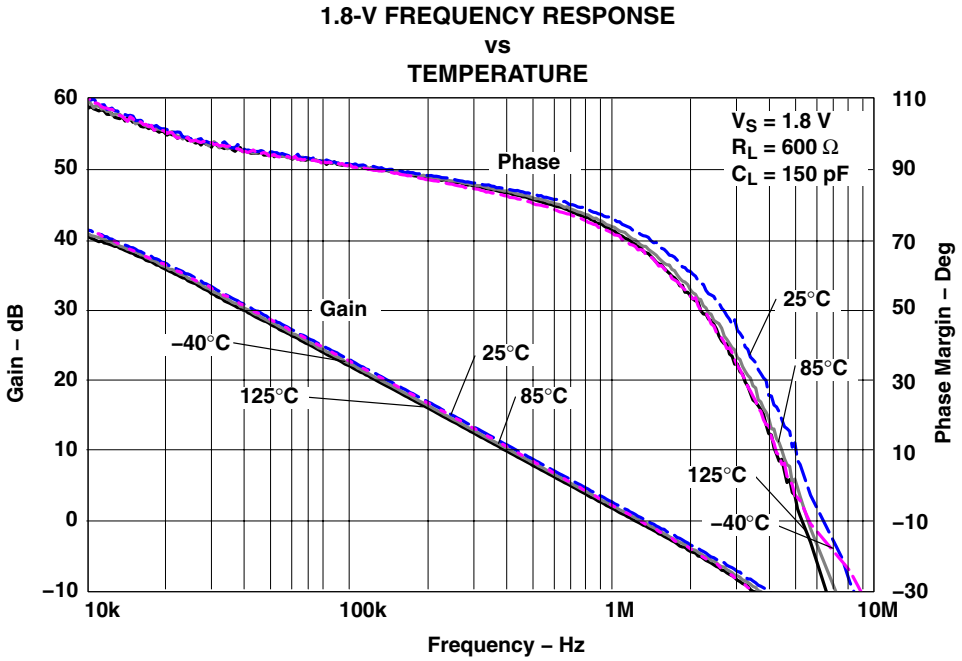

Figure 11

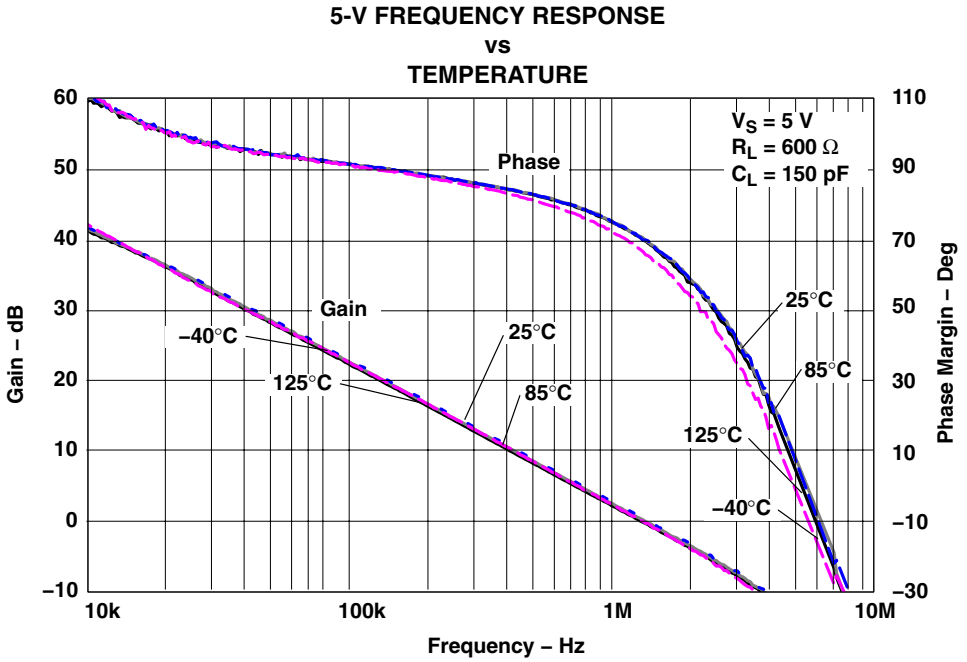

Figure 12

TYPICAL PERFORMANCE CHARACTERISTICS
Unless Otherwise Specified, V_{CC+} = 5 V, Single Supply, T_A = 25°C

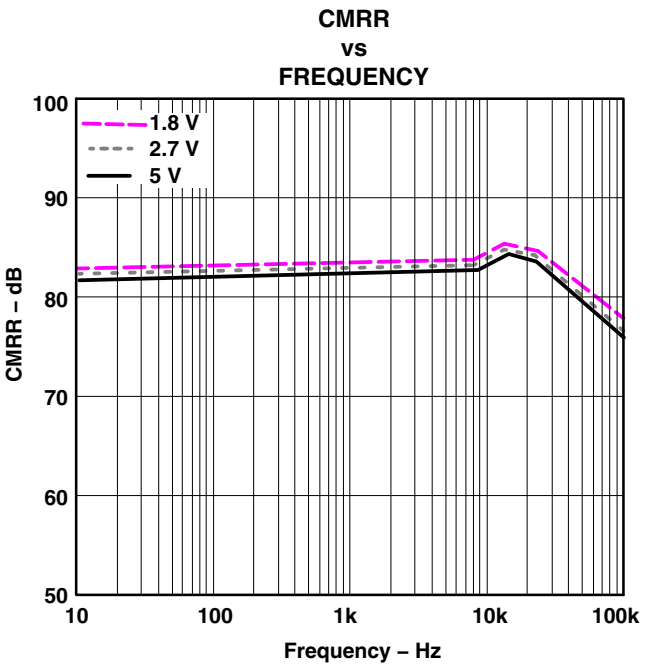

Figure 13

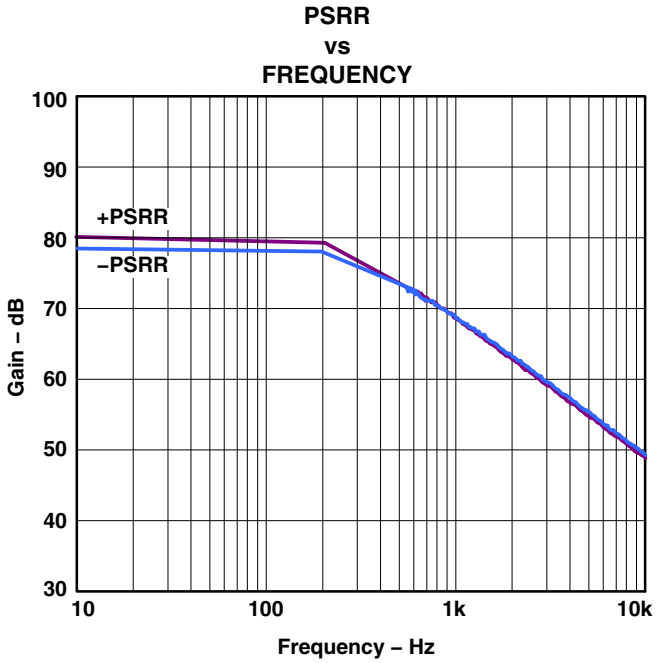

Figure 14

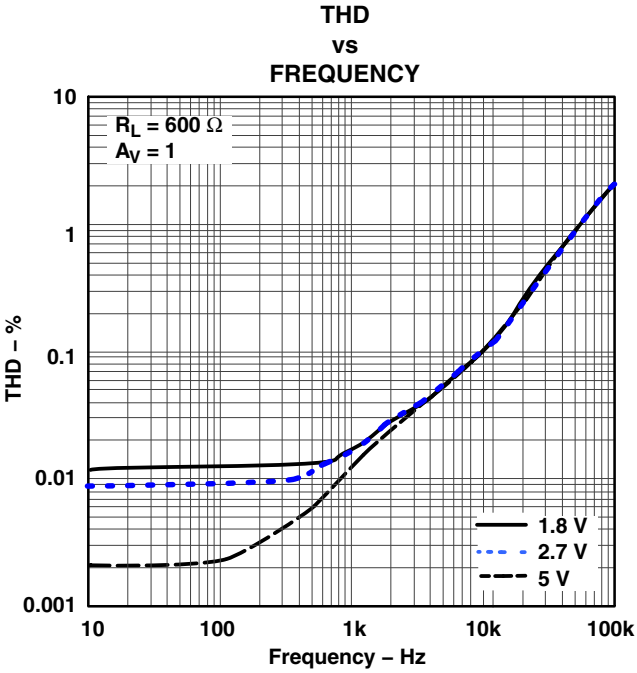

Figure 15

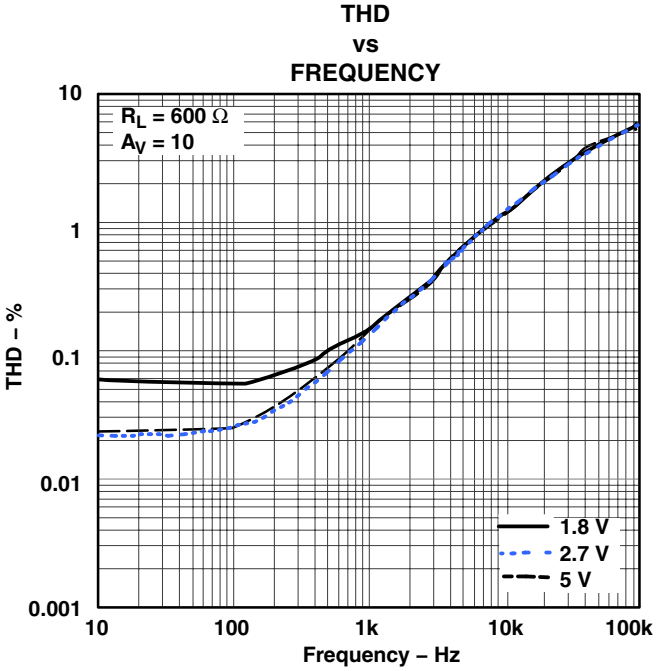

Figure 16

TYPICAL PERFORMANCE CHARACTERISTICS
Unless Otherwise Specified, V_{CC+} = 5 V, Single Supply, T_A = 25°C

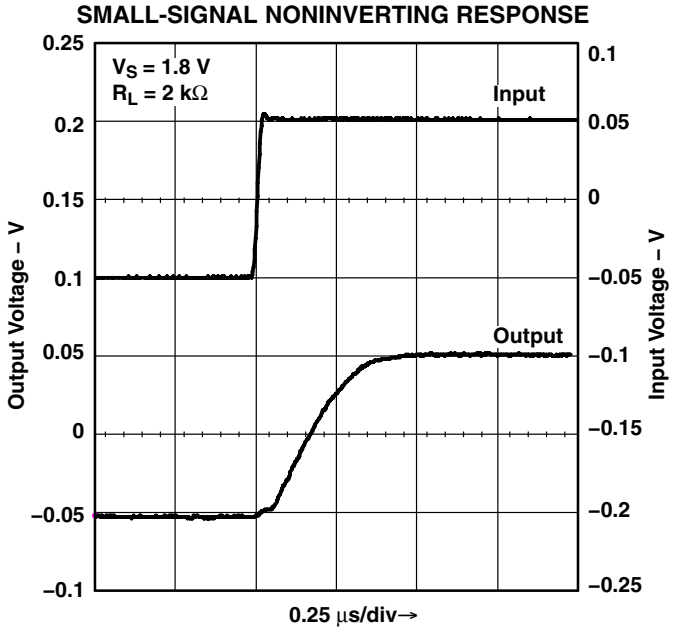

Figure 17

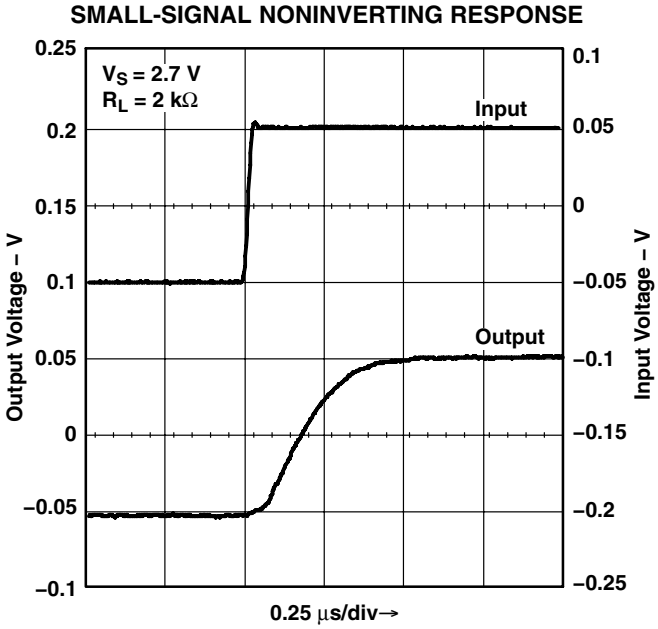

Figure 18

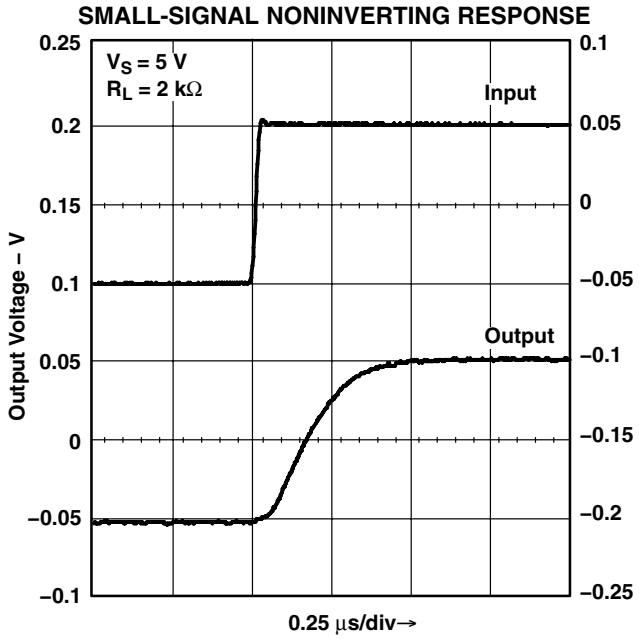

Figure 19

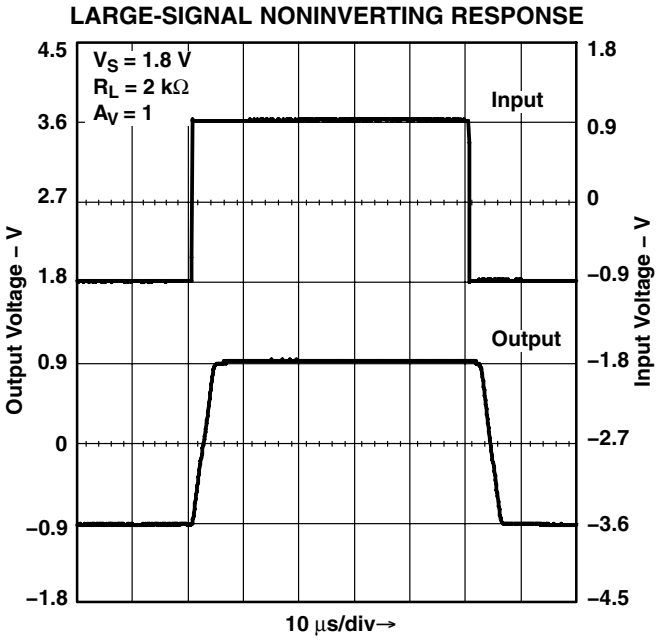

Figure 20

TYPICAL PERFORMANCE CHARACTERISTICS
Unless Otherwise Specified, V_{CC+} = 5 V, Single Supply, T_A = 25°C

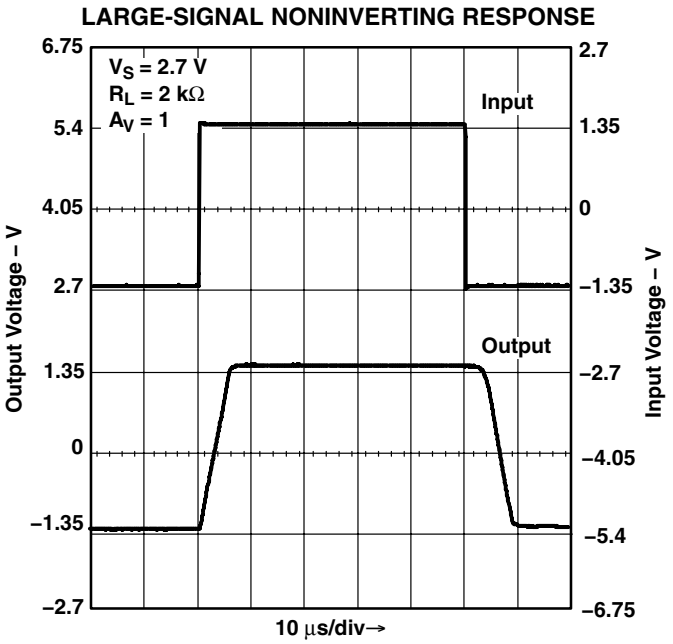

Figure 21

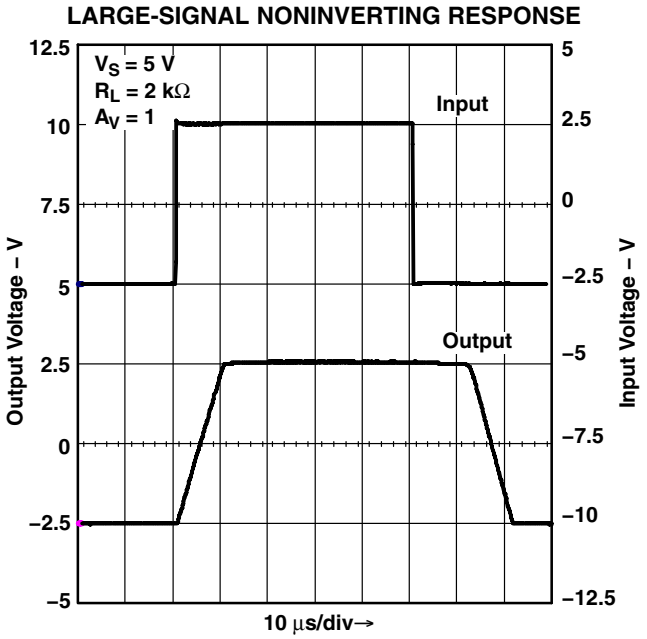

Figure 22

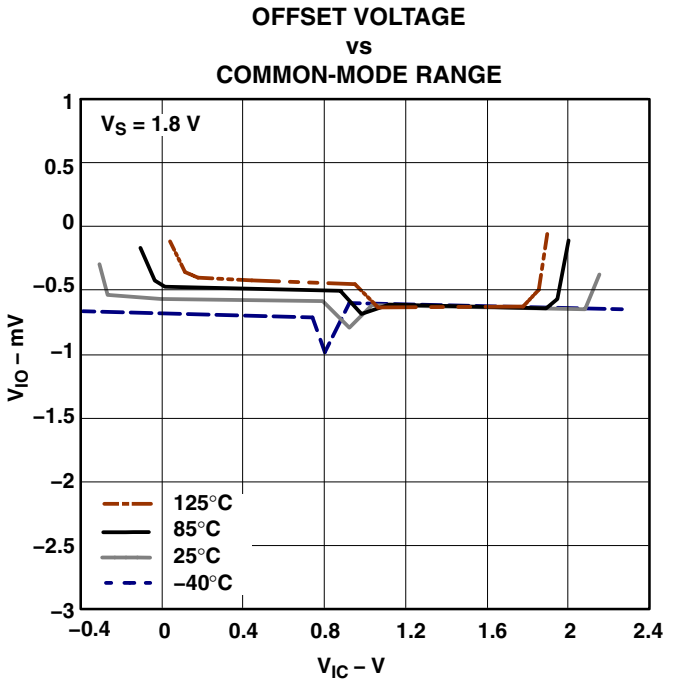

Figure 23

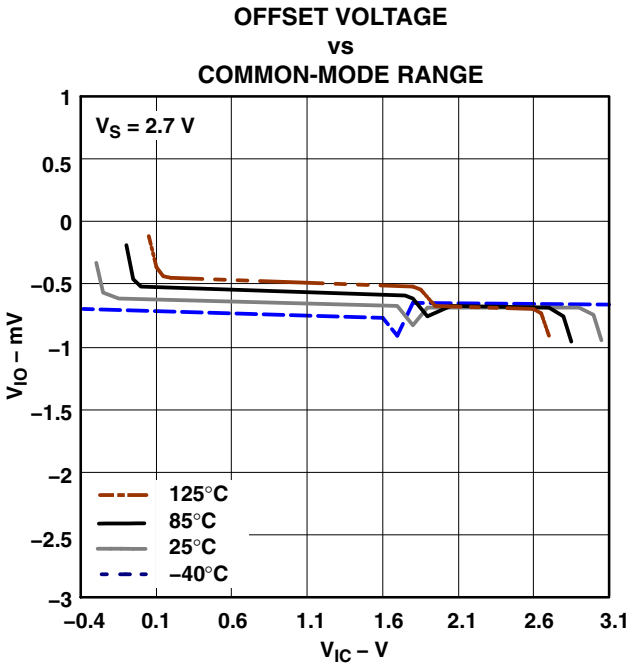

Figure 24

TYPICAL PERFORMANCE CHARACTERISTICS
Unless Otherwise Specified, V_{CC+} = 5 V, Single Supply, T_A = 25°C

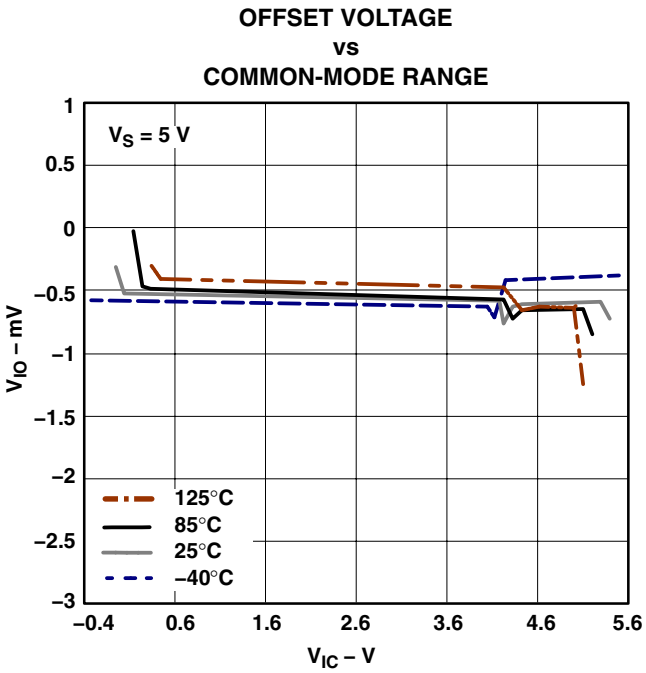

Figure 25

PACKAGING INFORMATION

Orderable Device	Status [1]	Package Type	Package Drawing	Pins	Package Qty	Eco Plan [2]	Lead/ Ball Finish	MSL Peak Temp [3]	Samples (Requires Login)
LMV981IDBVR	ACTIVE	SOT-23	DBV	6	3000	Green (RoHS & no Sb/Br)	CU NIPDAU	Level-1-260C-UNLIM	
LMV981IDBVRE4	ACTIVE	SOT-23	DBV	6	3000	Green (RoHS & no Sb/Br)	CU NIPDAU	Level-1-260C-UNLIM	
LMV981IDBVRG4	ACTIVE	SOT-23	DBV	6	3000	Green (RoHS & no Sb/Br)	CU NIPDAU	Level-1-260C-UNLIM	
LMV981IDCKR	ACTIVE	SC70	DCK	6	3000	Green (RoHS & no Sb/Br)	CU NIPDAU	Level-1-260C-UNLIM	
LMV981IDCKRE4	ACTIVE	SC70	DCK	6	3000	Green (RoHS & no Sb/Br)	CU NIPDAU	Level-1-260C-UNLIM	
LMV981IDCKRG4	ACTIVE	SC70	DCK	6	3000	Green (RoHS & no Sb/Br)	CU NIPDAU	Level-1-260C-UNLIM	
LMV981IRUGR	ACTIVE	X2QFN	RUG	8	3000	Green (RoHS & no Sb/Br)	CU NIPDAU	Level-1-260C-UNLIM	
LMV981IRUGRG4	ACTIVE	X2QFN	RUG	8	3000	Green (RoHS & no Sb/Br)	CU NIPDAU	Level-1-260C-UNLIM	
LMV982IDGSR	ACTIVE	MSOP	DGS	10	2500	Green (RoHS & no Sb/Br)	CU NIPDAU	Level-1-260C-UNLIM	
LMV982IDGSRE4	ACTIVE	MSOP	DGS	10	2500	Green (RoHS & no Sb/Br)	CU NIPDAU	Level-1-260C-UNLIM	
LMV982IDGSRG4	ACTIVE	MSOP	DGS	10	2500	Green (RoHS & no Sb/Br)	CU NIPDAU	Level-1-260C-UNLIM	

[1] The marketing status values are defined as follows:
ACTIVE: Product device recommended for new designs.
LIFEBUY: TI has announced that the device will be discontinued, and a lifetime-buy period is in effect.
NRND: Not recommended for new designs. Device is in production to support existing customers, but TI does not recommend using this part in a new design.
PREVIEW: Device has been announced but is not in production. Samples may or may not be available.
OBSOLETE: TI has discontinued the production of the device.

[2] Eco Plan - The planned eco-friendly classification: Pb-Free (RoHS), Pb-Free (RoHS Exempt), or Green (RoHS & no Sb/Br) - please check http://www.ti.com/productcontent for the latest availability information and additional product content details.
TBD: The Pb-Free/Green conversion plan has not been defined.
Pb-Free (RoHS): TI's terms "Lead-Free" or "Pb-Free" mean semiconductor products that are compatible with the current RoHS requirements for all 6 substances, including the requirement that lead not exceed 0.1% by weight in homogeneous materials. Where designed to be soldered at high temperatures, TI Pb-Free products are suitable for use in specified lead-free processes.

Pb-Free (RoHS Exempt): This component has a RoHS exemption for either 1) lead-based flip-chip solder bumps used between the die and package, or 2) lead-based die adhesive used between the die and leadframe. The component is otherwise considered Pb-Free (RoHS compatible) as defined above.
Green (RoHS & no Sb/Br): TI defines "Green" to mean Pb-Free (RoHS compatible), and free of Bromine (Br) and Antimony (Sb) based flame retardants (Br or Sb do not exceed 0.1% by weight in homogeneous material)

(3) MSL, Peak Temp. -- The Moisture Sensitivity Level rating according to the JEDEC industry standard classifications, and peak solder temperature.

Important Information and Disclaimer: The information provided on this page represents TI's knowledge and belief as of the date that it is provided. TI bases its knowledge and belief on information provided by third parties, and makes no representation or warranty as to the accuracy of such information. Efforts are underway to better integrate information from third parties. TI has taken and continues to take reasonable steps to provide representative and accurate information but may not have conducted destructive testing or chemical analysis on incoming materials and chemicals. TI and TI suppliers consider certain information to be proprietary, and thus CAS numbers and other limited information may not be available for release.

In no event shall TI's liability arising out of such information exceed the total purchase price of the TI part(s) at issue in this document sold by TI to Customer on an annual basis.

TAPE AND REEL INFORMATION

REEL DIMENSIONS

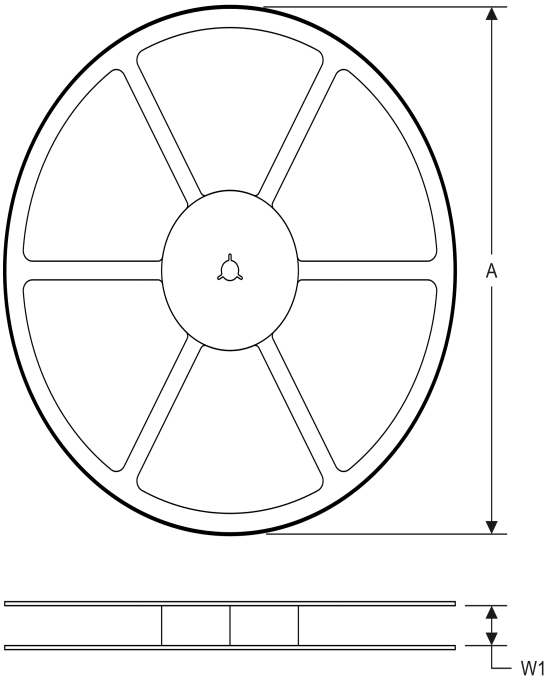

TAPE DIMENSIONS

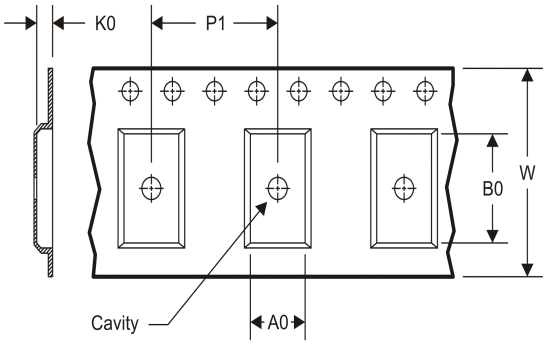

A0	Dimension designed to accommodate the component width
B0	Dimension designed to accommodate the component length
K0	Dimension designed to accommodate the component thickness
W	Overall width of the carrier tape
P1	Pitch between successive cavity centers

TAPE AND REEL INFORMATION

*All dimensions are nominal

Device	Package Type	Package Drawing	Pins	SPQ	Reel Diameter (mm)	Reel Width W1 (mm)	A0 (mm)	B0 (mm)	K0 (mm)	P1 (mm)	W (mm)	Pin1 Quadrant
LMV981IDBVR	SOT-23	DBV	6	3000	180.0	8.4	3.23	3.17	1.37	4.0	8.0	Q3
LMV981IDCKR	SC70	DCK	6	3000	180.0	8.4	2.25	2.4	1.22	4.0	8.0	Q3
LMV981IRUGR	X2QFN	RUG	8	3000	179.0	8.4	1.7	1.7	0.6	4.0	8.0	Q2
LMV982IDGSR	MSOP	DGS	10	2500	330.0	12.4	5.3	3.3	1.3	8.0	12.0	Q1

TAPE AND REEL BOX DIMENSIONS

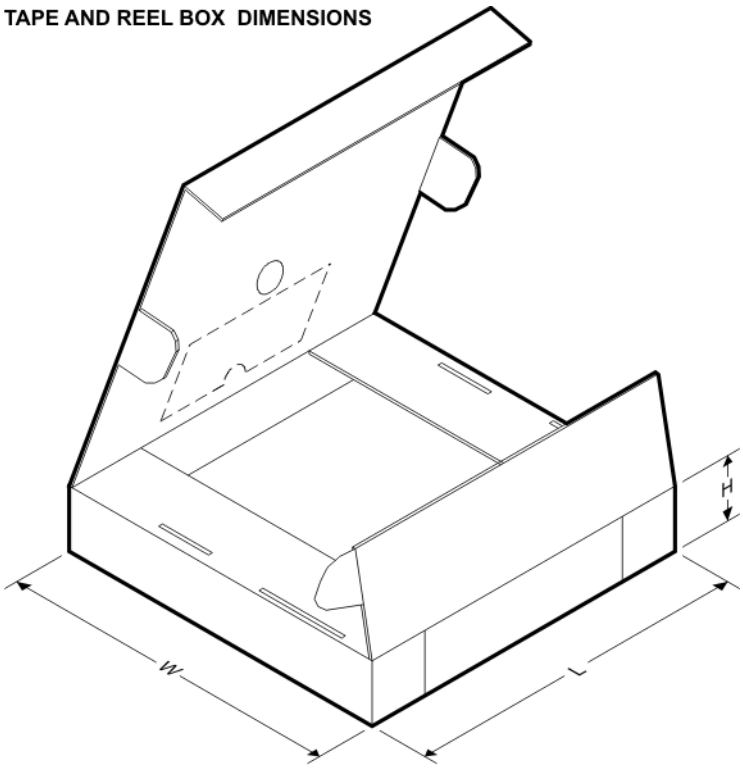

*All dimensions are nominal

Device	Package Type	Package Drawing	Pins	SPQ	Length (mm)	Width (mm)	Height (mm)
LMV981IDBVR	SOT-23	DBV	6	3000	202.0	201.0	28.0
LMV981IDCKR	SC70	DCK	6	3000	202.0	201.0	28.0
LMV981IRUGR	X2QFN	RUG	8	3000	203.0	203.0	35.0
LMV982IDGSR	MSOP	DGS	10	2500	370.0	355.0	55.0

DBV (R–PDSO–G6) PLASTIC SMALL–OUTLINE PACKAGE

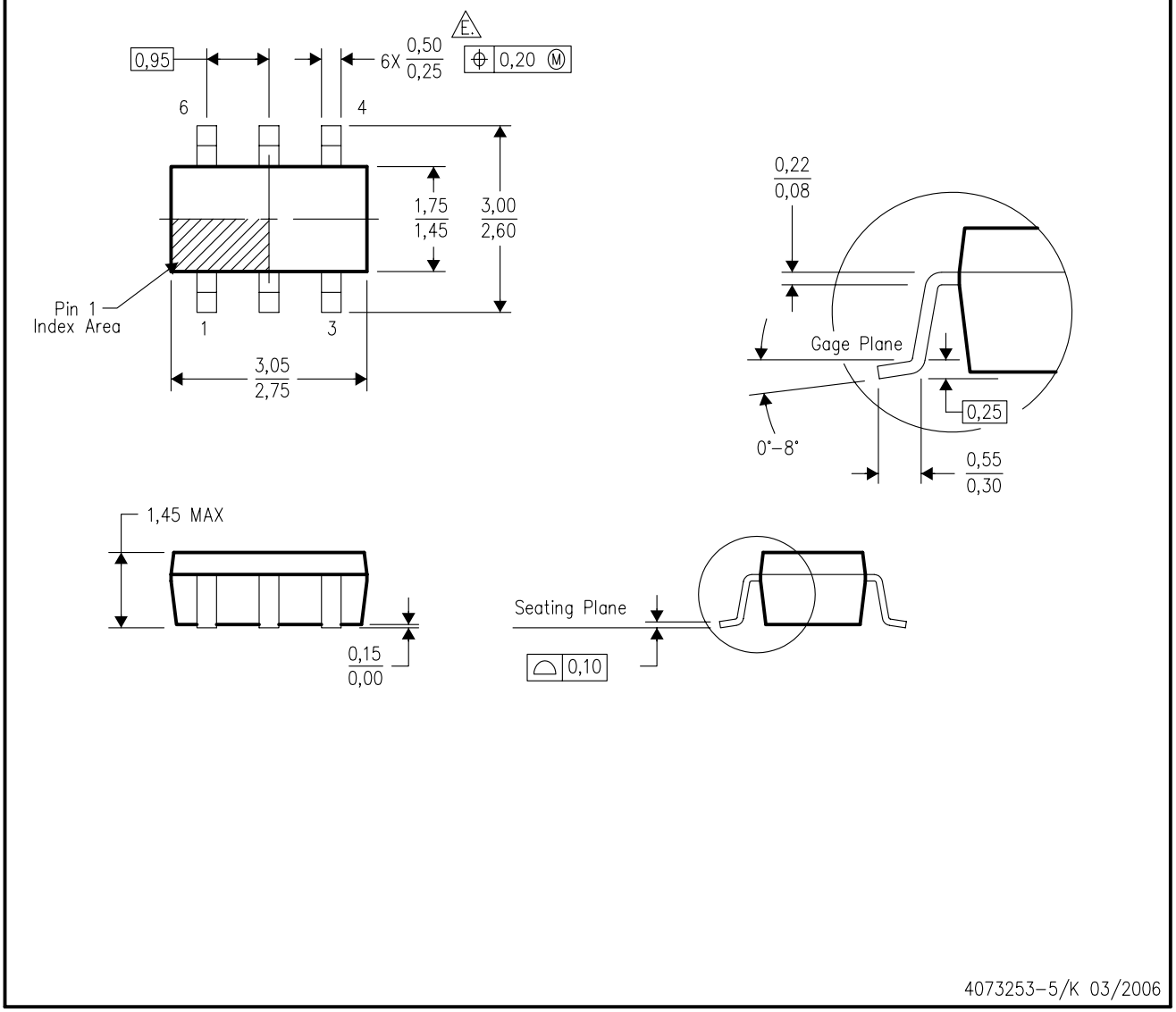

NOTES:
- A. All linear dimensions are in millimeters.
- B. This drawing is subject to change without notice.
- C. Body dimensions do not include mold flash or protrusion. Mold flash and protrusion shall not exceed 0.15 per side.
- D. Leads 1,2,3 may be wider than leads 4,5,6 for package orientation.
- E. Falls within JEDEC MO–178 Variation AB, except minimum lead width.

DBV (R-PDSO-G6) PLASTIC SMALL OUTLINE

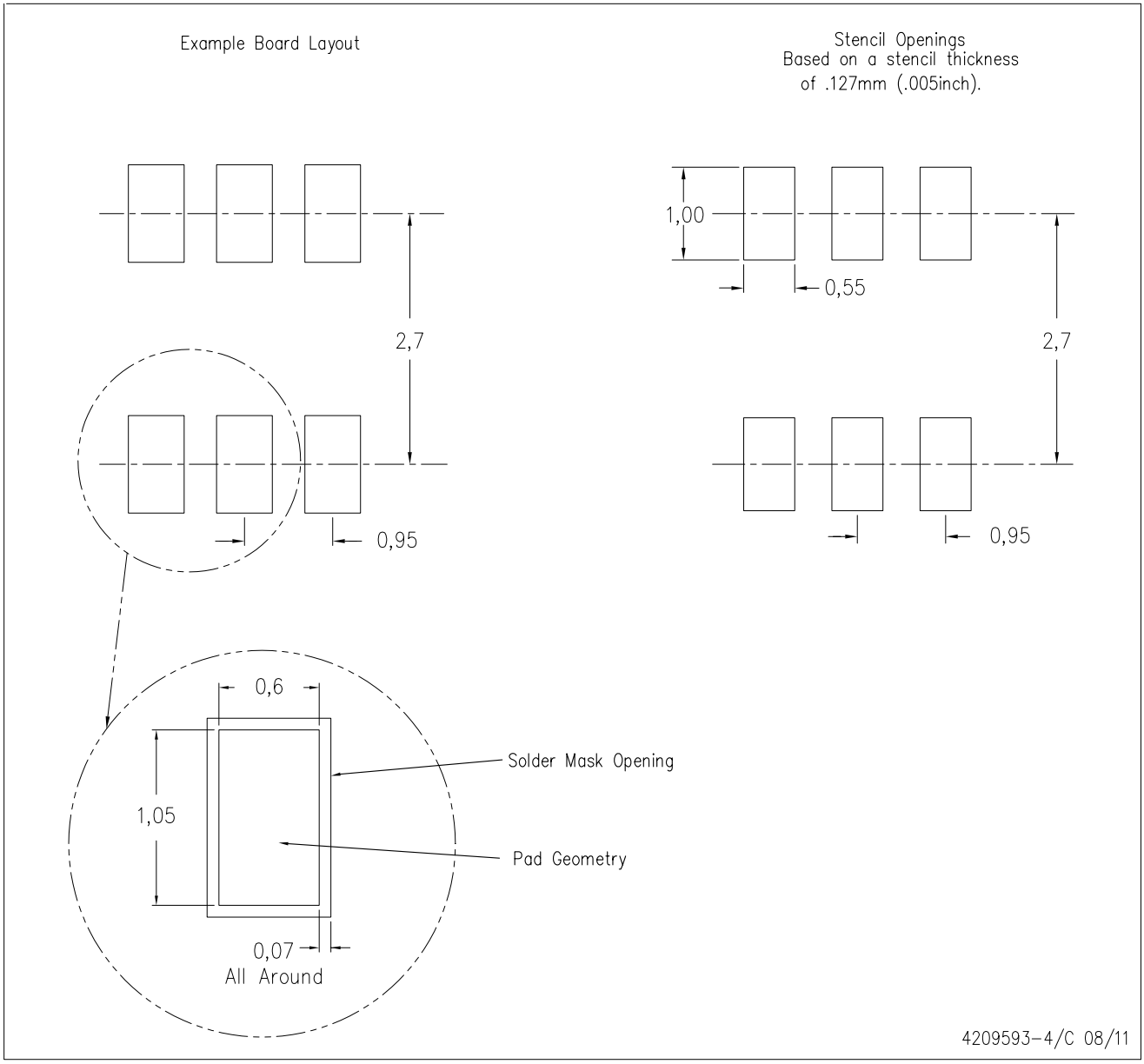

NOTES:
A. All linear dimensions are in millimeters.
B. This drawing is subject to change without notice.
C. Customers should place a note on the circuit board fabrication drawing not to alter the center solder mask defined pad.
D. Publication IPC-7351 is recommended for alternate designs.
E. Laser cutting apertures with trapezoidal walls and also rounding corners will offer better paste release. Customers should contact their board assembly site for stencil design recommendations. Example stencil design based on a 50% volumetric metal load solder paste. Refer to IPC-7525 for other stencil recommendations.

DGS (S–PDSO–G10) PLASTIC SMALL–OUTLINE PACKAGE

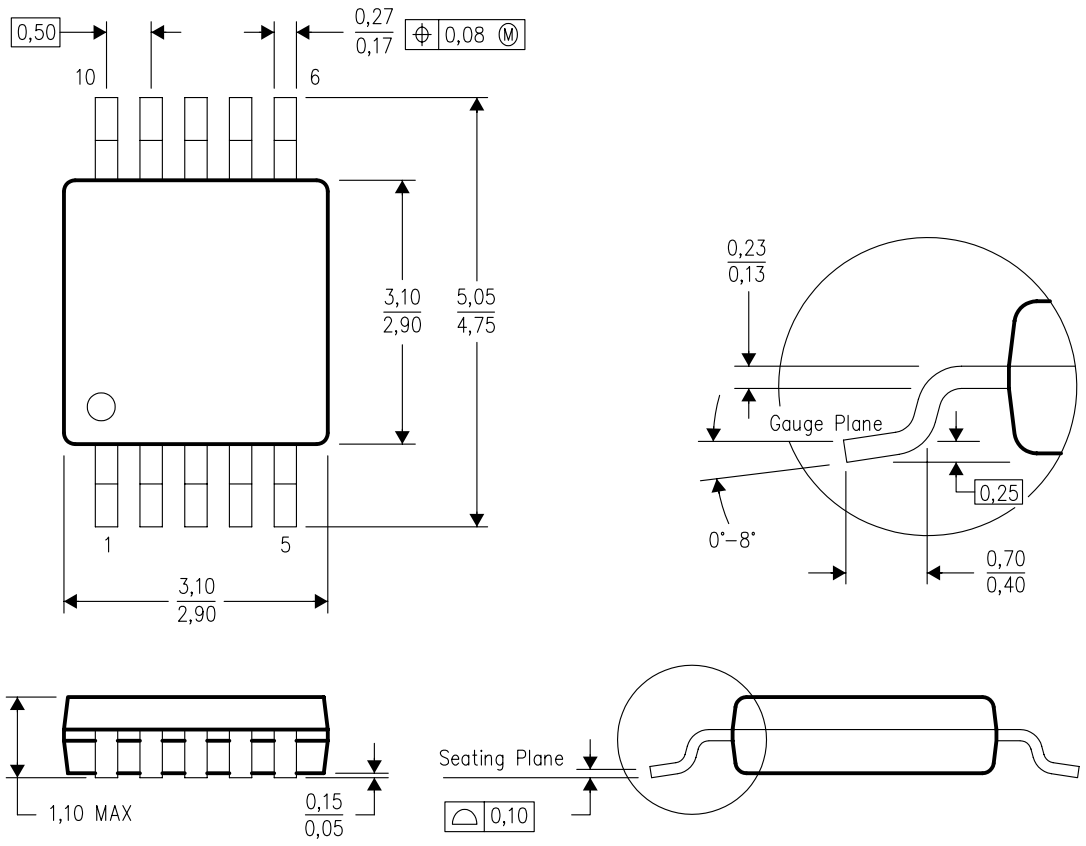

4073272/C 02/04

NOTES:
A. All linear dimensions are in millimeters.
B. This drawing is subject to change without notice.
C. Body dimensions do not include mold flash or protrusion.
D. Falls within JEDEC MO–187 variation BA.

DCK (R–PDSO–G6) PLASTIC SMALL–OUTLINE PACKAGE

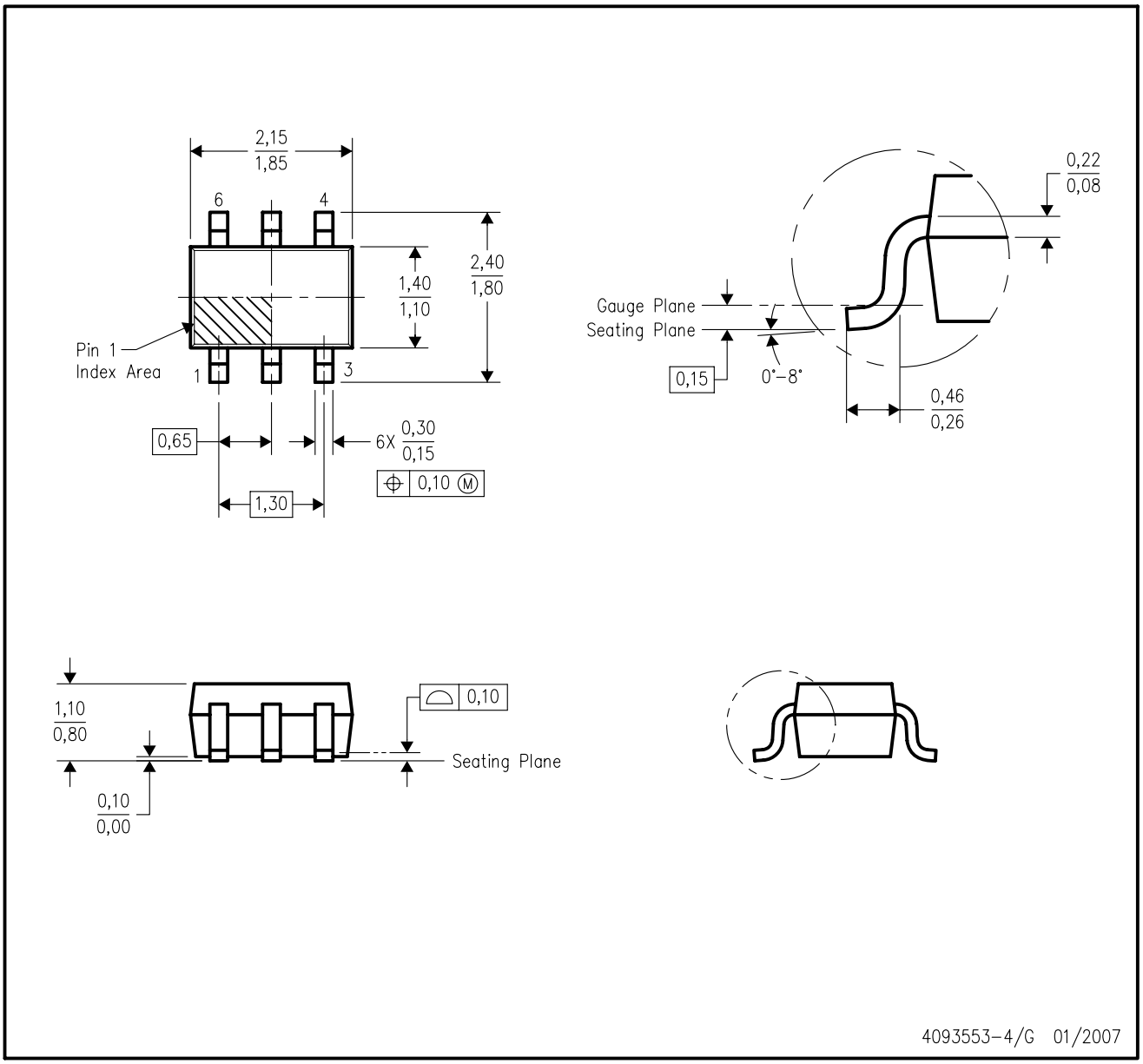

NOTES:
A. All linear dimensions are in millimeters.
B. This drawing is subject to change without notice.
C. Body dimensions do not include mold flash or protrusion. Mold flash and protrusion shall not exceed 0.15 per side.
D. Falls within JEDEC MO–203 variation AB.

RUG (S–PQFP–N8) PLASTIC QUAD FLATPACK

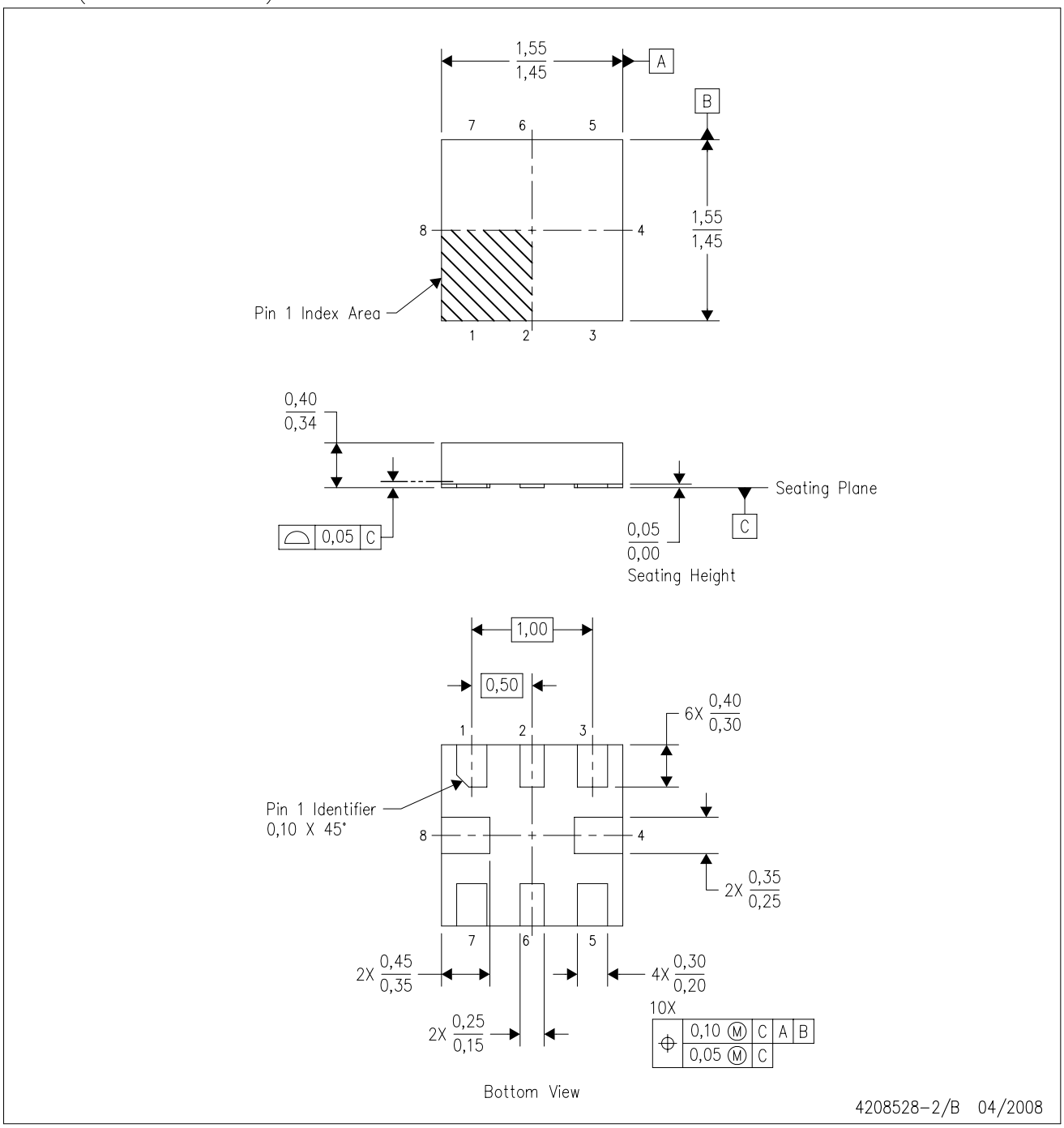

NOTES:
A. All linear dimensions are in millimeters. Dimensioning and tolerancing per ASME Y14.5M–1994.
B. This drawing is subject to change without notice.
C. QFN (Quad Flatpack No–Lead) package configuration.
D. This package complies to JEDEC MO–288 variation X2ECD.

RUG (R–PQFP–N8)

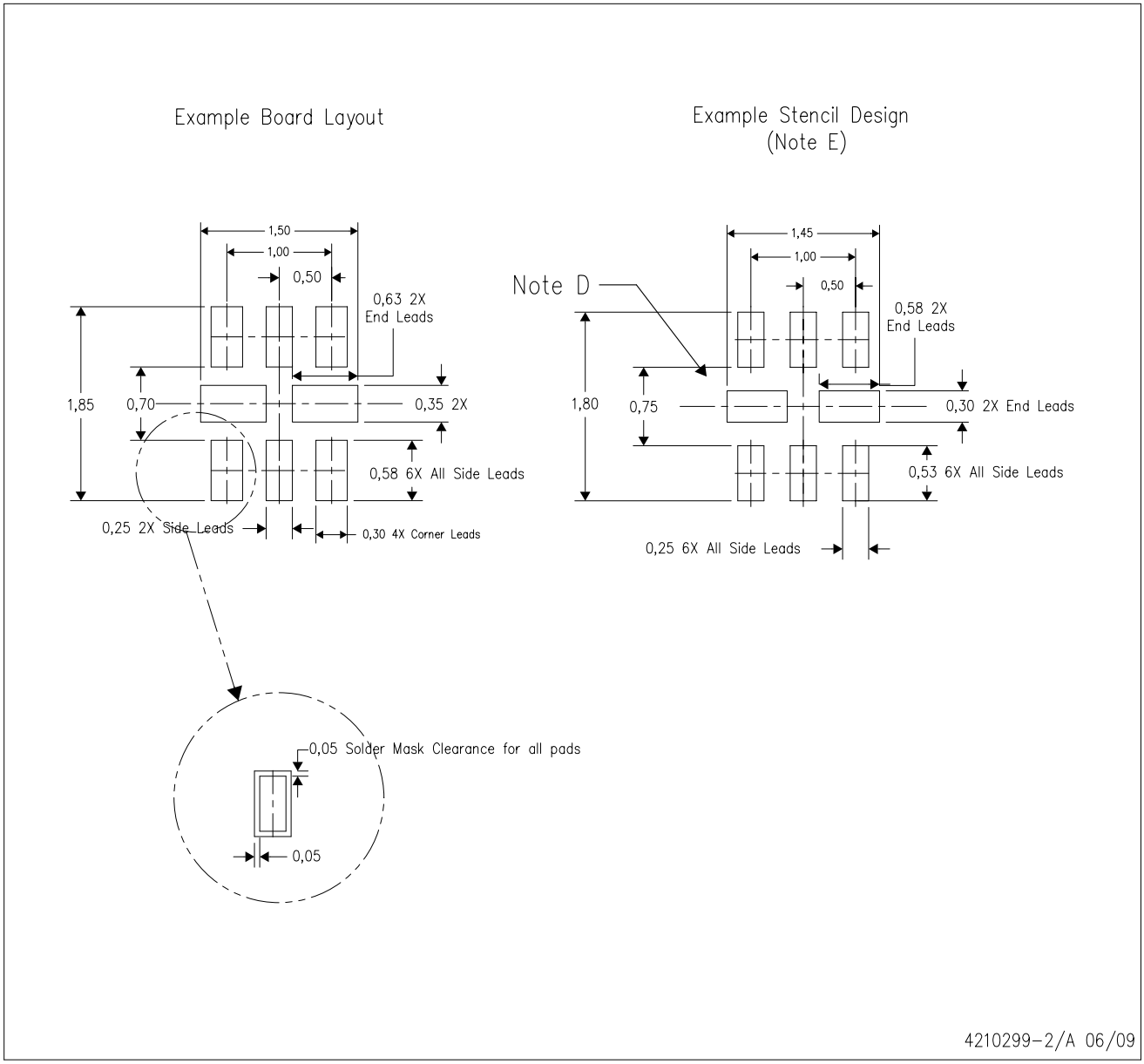

NOTES:
A. All linear dimensions are in millimeters.
B. This drawing is subject to change without notice.
C. Publication IPC–7351 is recommended for alternate designs.
D. Customers should contact their board fabrication site for minimum solder mask web tolerances between signal pads.
E. Maximum stencil thickness 0,127 mm (5 mils). All linear dimensions are in millimeters.
F. Laser cutting apertures with trapezoidal walls and also rounding corners will offer better paste release. Customers should contact their board assembly site for stencil design recommendations. Refer to IPC 7525 for stencil design considerations.
G. Side aperture dimensions over–print land for acceptable area ratio > 0.66. Customer may reduce side aperture dimensions if stencil manufacturing process allows for sufficient release at smaller opening.

IMPORTANT NOTICE

Texas Instruments Incorporated and its subsidiaries (TI) reserve the right to make corrections, modifications, enhancements, improvements, and other changes to its products and services at any time and to discontinue any product or service without notice. Customers should obtain the latest relevant information before placing orders and should verify that such information is current and complete. All products are sold subject to TI's terms and conditions of sale supplied at the time of order acknowledgment.

TI warrants performance of its hardware products to the specifications applicable at the time of sale in accordance with TI's standard warranty. Testing and other quality control techniques are used to the extent TI deems necessary to support this warranty. Except where mandated by government requirements, testing of all parameters of each product is not necessarily performed.

TI assumes no liability for applications assistance or customer product design. Customers are responsible for their products and applications using TI components. To minimize the risks associated with customer products and applications, customers should provide adequate design and operating safeguards.

TI does not warrant or represent that any license, either express or implied, is granted under any TI patent right, copyright, mask work right, or other TI intellectual property right relating to any combination, machine, or process in which TI products or services are used. Information published by TI regarding third-party products or services does not constitute a license from TI to use such products or services or a warranty or endorsement thereof. Use of such information may require a license from a third party under the patents or other intellectual property of the third party, or a license from TI under the patents or other intellectual property of TI.

Reproduction of TI information in TI data books or data sheets is permissible only if reproduction is without alteration and is accompanied by all associated warranties, conditions, limitations, and notices. Reproduction of this information with alteration is an unfair and deceptive business practice. TI is not responsible or liable for such altered documentation. Information of third parties may be subject to additional restrictions.

Resale of TI products or services with statements different from or beyond the parameters stated by TI for that product or service voids all express and any implied warranties for the associated TI product or service and is an unfair and deceptive business practice. TI is not responsible or liable for any such statements.

TI products are not authorized for use in safety-critical applications (such as life support) where a failure of the TI product would reasonably be expected to cause severe personal injury or death, unless officers of the parties have executed an agreement specifically governing such use. Buyers represent that they have all necessary expertise in the safety and regulatory ramifications of their applications, and acknowledge and agree that they are solely responsible for all legal, regulatory and safety-related requirements concerning their products and any use of TI products in such safety-critical applications, notwithstanding any applications-related information or support that may be provided by TI. Further, Buyers must fully indemnify TI and its representatives against any damages arising out of the use of TI products in such safety-critical applications.

TI products are neither designed nor intended for use in military/aerospace applications or environments unless the TI products are specifically designated by TI as military-grade or "enhanced plastic." Only products designated by TI as military-grade meet military specifications. Buyers acknowledge and agree that any such use of TI products which TI has not designated as military-grade is solely at the Buyer's risk, and that they are solely responsible for compliance with all legal and regulatory requirements in connection with such use.

TI products are neither designed nor intended for use in automotive applications or environments unless the specific TI products are designated by TI as compliant with ISO/TS 16949 requirements. Buyers acknowledge and agree that, if they use any non-designated products in automotive applications, TI will not be responsible for any failure to meet such requirements.

Following are URLs where you can obtain information on other Texas Instruments products and application solutions:

Products		**Applications**	
Audio	www.ti.com/audio	Automotive and Transportation	www.ti.com/automotive
Amplifiers	amplifier.ti.com	Communications and Telecom	www.ti.com/communications
Data Converters	dataconverter.ti.com	Computers and Peripherals	www.ti.com/computers
DLP® Products	www.dlp.com	Consumer Electronics	www.ti.com/consumer-apps
DSP	dsp.ti.com	Energy and Lighting	www.ti.com/energy
Clocks and Timers	www.ti.com/clocks	Industrial	www.ti.com/industrial
Interface	interface.ti.com	Medical	www.ti.com/medical
Logic	logic.ti.com	Security	www.ti.com/security
Power Mgmt	power.ti.com	Space, Avionics and Defense	www.ti.com/space-avionics-defense
Microcontrollers	microcontroller.ti.com	Video and Imaging	www.ti.com/video
RFID	www.ti-rfid.com		
OMAP Mobile Processors	www.ti.com/omap		
Wireless Connectivity	www.ti.com/wirelessconnectivity		

TI E2E Community Home Page e2e.ti.com

Mailing Address: Texas Instruments, Post Office Box 655303, Dallas, Texas 75265
Copyright © 2012, Texas Instruments Incorporated

Looking for pricing, stock, or lifecycle information?

Click below to explore more details on WIN SOURCE:

- View LMV982IDGSR on WIN SOURCE
- Texas Instruments Information

Optimize Your Supply Chain with WIN SOURCE Solutions

- Global Sourcing Solution
- Obsolete Management
- Cost Control Management
- Shortage Management
- Alternative Solution
- Excess Inventory Management