THE DATASHEET OF

MSCDRI-74-100M-RU

Mag Layers USA, INC

Specification Sheet

P/N : MSCDRI-74-Series-RU

Products:

Molded Power Chokes

Multilayer Chip Inductors

Lan Transformer

RF Passive / Antennas

Automotive

Certifications:

ISO9001

IATF16949

ISO14001

QC080000

US Office

5406 Bolsa Ave.,
Huntington Beach, CA 92649
(714) 898-8377

Contact Us

www.maglayersusa.com
info@maglayersusa.com

SCOPE：

This specification applies to the Pb Free high current type SMD inductors for MSCDRI-74-SERIES

PRODUCT INDENTIFICATION

MSCDRI - 74 - 100 M-RU

① ② ③ ④

① Product Code

② Dimensions Code

③ Inductance Code

④ Tolerance Code

(1) SHAPES AND DIMENSIONS

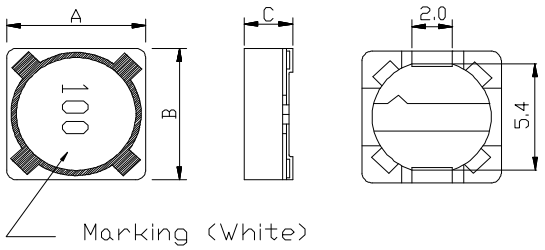

A: 7.30±0.5 mm

B: 7.30±0.5 mm

C: 4.60Max. mm

(2) ELECTRICAL SPECIFICATIONS

SEE TABLE 1

TEST INSTRUMENTS

L : HP 4284A PRECISION LCR METER (or equivalent)

RDC : CHROMA MODEL 16502 MILLIOHMMETER (or equivalent)

(3) CHARACTERISTICS

(3)-1 Ambient temperature ……..... ＋60℃ Max.

(3)-2 Operate temperature range ..... －40℃～＋125℃

(Including self temp. rise)

(3)-3 Storage temperature range ..... －40℃～＋125℃

TABLE 1

MAGLAYERS PT/NO.	Inductance L(μH)	Percent Tolerance	Test Frequency	Resistance RDC(Ω) Max.	Rated DC Current IDC(A)	Marking
MSCDRI-74-R33□-RU	0.33	N	100kHz/0.25V	8.7m	8.5	R33
MSCDRI-74-1R0□-RU	1.0	N	100kHz/0.25V	11.1m	6.8	1R0
MSCDRI-74-1R2□-RU	1.2	M,N	100kHz/0.25V	11.1m	6.8	1R2
MSCDRI-74-1R5□-RU	1.5	N	100kHz/0.25V	13.4m	5.7	1R5
MSCDRI-74-1R8□-RU	1.8	M,N	100kHz/0.25V	14.7m	5.0	1R8
MSCDRI-74-2R2□-RU	2.2	N	100kHz/0.25V	14.7m	5.0	2R2
MSCDRI-74-3R3□-RU	3.3	M,N	100kHz/0.25V	21.4m	4.0	3R3
MSCDRI-74-4R7□-RU	4.7	M,N	100kHz/0.25V	31.0m	3.4	4R7
MSCDRI-74-5R6□-RU	5.6	M,N	100kHz/0.25V	33.5m	3.0	5R6
MSCDRI-74-6R8□-RU	6.8	M,N	100kHz/0.25V	35m	2.3	6R8
MSCDRI-74-8R2□-RU	8.2	M,N	100kHz/0.25V	42m	2.1	8R2
MSCDRI-74-100□-RU	10	M	100kHz/0.25V	49m	1.84	100
MSCDRI-74-120□-RU	12	M	100kHz/0.25V	58m	1.71	120
MSCDRI-74-150□-RU	15	M	100kHz/0.25V	81m	1.47	150
MSCDRI-74-180□-RU	18	M	100kHz/0.25V	91m	1.31	180
MSCDRI-74-220□-RU	22	M	100kHz/0.25V	0.11	1.23	220
MSCDRI-74-270□-RU	27	M	100kHz/0.25V	0.15	1.12	270
MSCDRI-74-330□-RU	33	M	100kHz/0.25V	0.20	0.96	330
MSCDRI-74-390□-RU	39	M	100kHz/0.25V	0.23	0.91	390
MSCDRI-74-470□-RU	47	M	100kHz/0.25V	0.26	0.88	470
MSCDRI-74-560□-RU	56	M	100kHz/0.25V	0.35	0.75	560
MSCDRI-74-680□-RU	68	M	100kHz/0.25V	0.38	0.69	680
MSCDRI-74-820□-RU	82	M	100kHz/0.25V	0.43	0.61	820
MSCDRI-74-101□-RU	100	M	100kHz/0.25V	0.61	0.60	101
MSCDRI-74-121□-RU	120	M	100kHz/0.25V	0.66	0.52	121
MSCDRI-74-151□-RU	150	M	100kHz/0.25V	0.88	0.46	151
MSCDRI-74-181□-RU	180	M	100kHz/0.25V	0.98	0.42	181
MSCDRI-74-221□-RU	220	M	100kHz/0.25V	1.17	0.36	221
MSCDRI-74-271□-RU	270	M	100kHz/0.25V	1.64	0.34	271
MSCDRI-74-331□-RU	330	M	100kHz/0.25V	1.86	0.32	331
MSCDRI-74-391□-RU	390	M	100kHz/0.25V	2.85	0.29	391
MSCDRI-74-471□-RU	470	M	100kHz/0.25V	3.01	0.26	471
MSCDRI-74-561□-RU	560	M	100kHz/0.25V	3.62	0.23	561
MSCDRI-74-681□-RU	680	M	100kHz/0.25V	4.63	0.22	681
MSCDRI-74-821□-RU	820	M	100kHz/0.25V	5.20	0.20	821
MSCDRI-74-102□-RU	1000	M	100kHz/0.25V	6.00	0.18	102

※ □ specify the inductance tolerance,M(±20%),N(±30%)

※IDC : Based on inductance change (△L/Lo: drop 25% Max.) @ambient temperature 25℃ and

Based on temperature rise (△T： 40℃ Typ.)

MAG.LAYERS

(4) RELIABILITY TEST METHOD

MECHANICAL

TEST ITEM	SPECIFICATION	TEST DETAILS
Substrate bending	△L/Lo≦±5% There shall be no mechanical damage or electrical damege.	The sample shall be soldered onto the printed circuit board in figure 1 and a load applied unitil the figure in the arrow direction is made approximately 3mm.(keep time 30 seconds) PCB dimension shall the page 7/9 F(Pressurization) 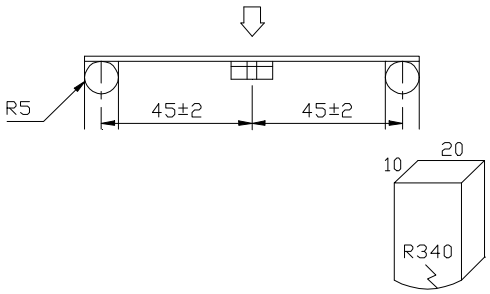 PRESSURE ROD figure-1
Vibration	△L/Lo≦±5% There shall be no mechanical damage.	The sample shall be soldered onto the printed circuit board and when a vibration having an amplitude of 1.52mm and a frequency of from 10 to 55Hz/1 minute repeated should be applied to the 3 directions (X,Y,Z) for 2 hours each. (A total of 6 hours)
Solderability	New solder More than 90%	Flux (rosin, isopropyl alcohol{JIS-K-1522}) shall be coated over the whole of the sample before hard, the sample shall then be preheated for about 2 minutes in a temperature of 130～150℃ and after it has been immersed to a depth 0.5mm below for 3±0.2 seconds fully in molten solder M705 with a temperature of 245±5℃. More than 90% of the electrode sections shall be couered with new solder smoothly when the sample is taken out of the solder bath.

MECHANICAL

TEST ITEM	SPECIFICATION	
Resistance to Soldering heat (reflow soldering)	There shall be no damage or problems.	Temperature profile of reflow soldering 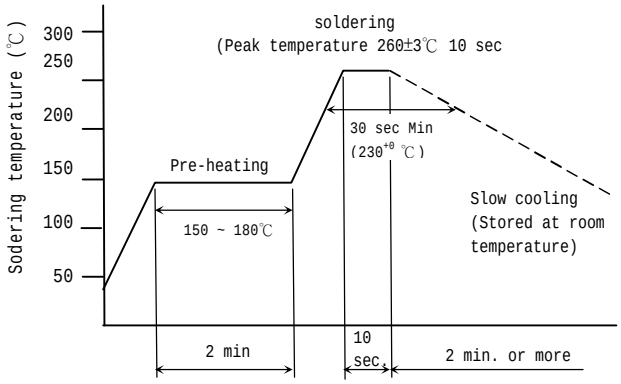 The specimen shall be passed through the reflow oven with the condition shown in the above profile for 1 time. The specimen shall be stored at standard atmospheric conditions for 1 hour, after which the measurement shall be made.

ELECTRICAL

TEST ITEM	SPECIFICATION	TEST DETAILS
Insulation resistance	There shall be no other damage or problems.	DC 100V voltage shall be applied across this sample of top surface and the terminal. The insulation resistance shall be more than 1×10^8 Ω.
Dielectric withstand voltage	There shall be no other damage or problems.	AC 100V voltage shall be applied for 1 minute acrosset the top surface and the terminal of this sample
Temperature characteristics	△L/L20℃ ≦±10% 0～2000 ppm/℃	The test shall be performed after the sample has stabilized in an ambient temperature of -20 to +85℃,and the value calculated based on the value applicable in a normal temperature and narmal humidity shall be △L/L20℃ ≦±10%.

ENVIROMENT CHARACTERISTICS

TEST ITEM	SPECIFICATION	
High temperature storage	△L/Lo≦±5% There shall be no mechanical damage.	The sample shall be left for 96±4 hours in an atmospere with a temperature of 85±2℃ and a normal humidity. Upon completion of the measurement shall be made after the sample has been left in a normal temperature and normal humidity for 1 hour.
Low temperature storage	△L/Lo≦±5% There shall be no mechanical damage.	The sample shall be left for 96±4 hours in an atmosphere with a temperature of -25±3℃. Upon completion of the test, the measurement shall be made after the sample has been left in a normal temperature and normal humidity for 1 hour.
Change of temperature	△L/Lo≦±5% There shall be no other dama-ge of problems	The sample shall be subject to 5 continuos cycles, such as shown in the table 2 below and then it shall be subjected to standard atmospheric conditions for 1 hour, after which measurement shall be made. table 2

	Temperature	Duration
1	－25±3℃ (Themostat No.1)	30 min.
2	Standard atmospheric	No.1→No.2
3	85±2℃ (Themostat No.2)	30 min.
4	Standard atmospheric	No.2→No.1

Moisture storage	△L/Lo≦±5% There shall be no mechanical damage.	The sample shall be left for 96±4 hours in a temperature of 40±2℃ and a humidity(RH) of 90～95%. Upon completion of the test, the measurement shall be made after the sample has been left in a normal temperature and normal humidity more than 1 hour.

Test conditions：

The sample shall be reflow soldered onto the printed circuit board in every test.

(5) LAND DIMENSION (Ref.)

PCB: GLASS EPOXY t＝1.6mm

(5)-1 LAND PATTERN DIMENSIONS

(STANDARD PATTERN) Unit : mm

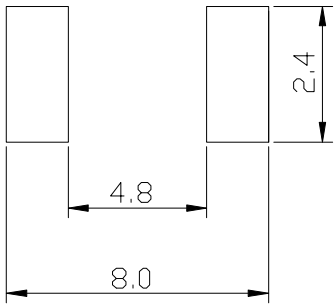

(5)-2 SUBSTRATE BENDING TEST BENDING TEST BOARD

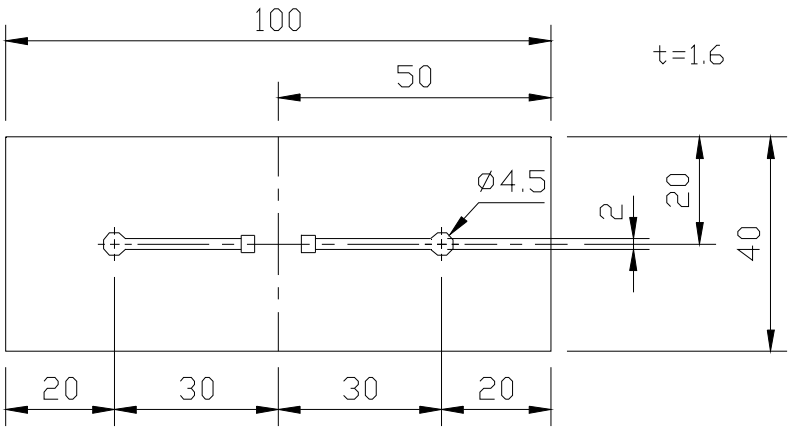

(6) PACKAGING

(6)-1 CARRIER TAPE DIMENSIONS (mm)

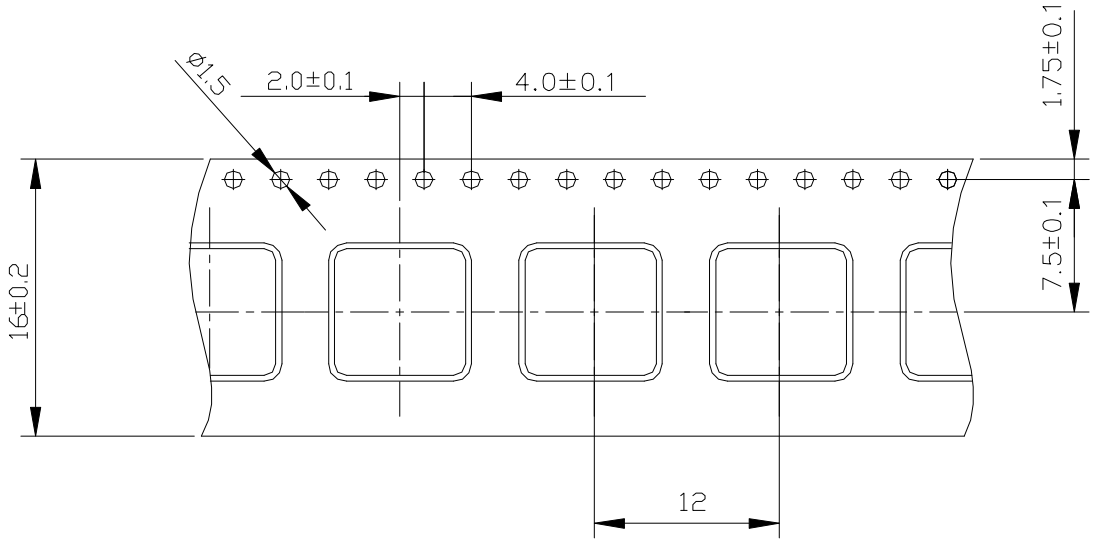

(6)-2 TAPING DIMENSIONS (mm)

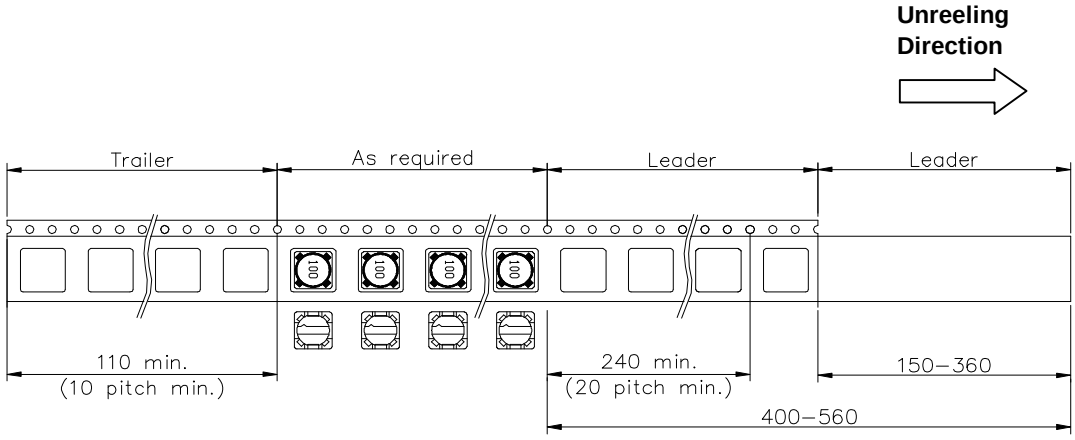

(6)-3 REEL DIMENSIONS (mm)

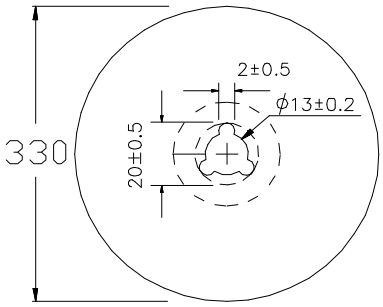

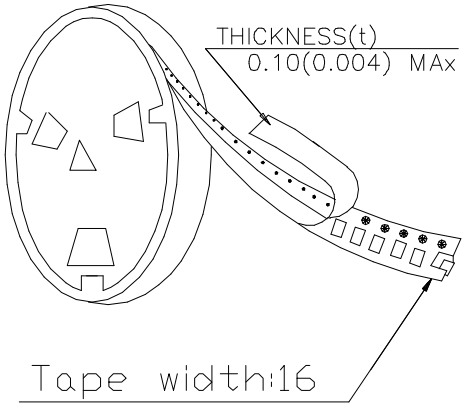

(6)-4 QUANTITY

1000pcs/Reel

The products are packaged so that no damage will be sustained.

Looking for pricing, stock, or lifecycle information?

Click below to explore more details on WIN SOURCE:

- View MSCDRI-74-100M-RU on WIN SOURCE
- Mag Layers Information

Optimize Your Supply Chain with WIN SOURCE Solutions

- Global Sourcing Solution
- Obsolete Management
- Cost Control Management
- Shortage Management
- Alternative Solution
- Excess Inventory Management