THE DATASHEET OF

PT6441A

www.win-source.net 0086-755-83957316

PT6440 Series

6-A 5-V/3.3-V Input Adjustable Integrated Switching Regulator

EXCALIBUR

SLTS133B

Revised (1/30/2002)

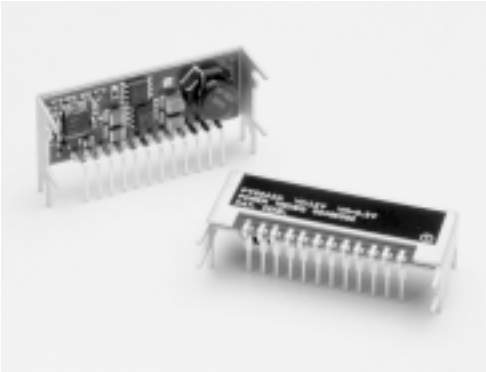

Features

- 6A Output Current
- Input Voltage Range: 3.1 V to 5.5 V
- 90% Efficiency
- Adjustable Output Voltage
- Standby Function
- Short Circuit Protection
- Small Footprint (0.61 in^2)
- Solderable Copper Case
- 8.8 10^6 Hours MTBF

Description

The PT6440 Excalibur™ power modules are a series of high performance Integrated Switching Regulators (ISRs), housed in a thermally efficient solderable copper case. These modules operate from input voltages as low as 3.1V to produce a high-output low-voltage power source; ideal for powering the industry's latest DSP and microprocessors. The series includes standard output bus voltages as low as 1.0VDC.

The innovative copper case construction provides superior thermal performance in a small footprint. Both through-hole and surface mount pin configurations are available. The PT6440 series operating features include external output voltage adjustment, an On/Off inhibit, and short-circuit protection. A 100µF input, and 330µF output capacitor are required for proper operation.

Ordering Information

PT6441❒ = 3.3 Volts
† **PT6442❒** = 2.5 Volts
† **PT6443❒** = 2.0 Volts
† **PT6444❒** = 1.8 Volts
† **PT6445❒** = 1.5 Volts
† **PT6446❒** = 1.2 Volts
† **PT6447❒** = 1.0 Volts

† 3.3V Input Bus Capable

PT Series Suffix (PT1234x)

Case/Pin Configuration	Order Suffix	Package Code *
Vertical	**N**	(EPH)
Horizontal	**A**	(EPJ)
SMD	**C**	(EPK)

** Previously known as package styles 1540/50.*

(Reference the applicable package code drawing for the dimensions and PC board layout)

Pin-Out Information

Pin	Function
1	Inhibit *
2	V_{in}
3	V_{in}
4	V_{in}
5	GND
6	GND
7	GND
8	GND
9	V_{out}
10	V_{out}
11	V_{out}
12	V_{out} Adj *

* *For further information, see application notes.*

Standard Application

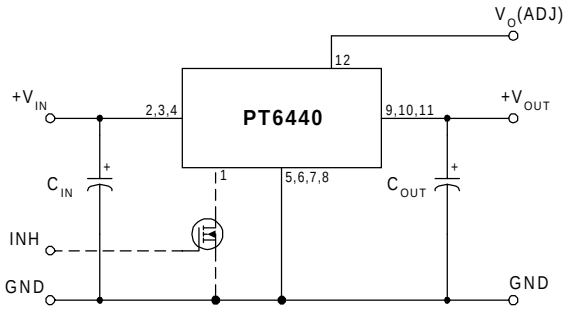

C_{in} = Required 100µF electrolytic
C_{out} = Required 330µF electrolytic

Specifications (Unless otherwise stated, T_a =25°C, V_{in} =5V, C_{in} =100µF, C_{out} =330µF, and I_o =$I_o$max)

Characteristic	Symbol	Conditions		PT6440 SERIES Min	Typ	Max	Units
Output Current	I_o	T_a =+60°C, 200LFM T_a =+25°C, natural convection		0.1 (1) 0.1 (1)	— —	6 6	A
Input Voltage Range	V_{in}	Over I_o Range	V_o = 3.3V V_o ≤ 2.5V	4.5 3.1	— —	5.5 5.5	VDC
Set Point Voltage Tolerance	V_o tol			—	±1	±2 (2)	%V_o
Temperature Variation	Reg_{temp}	–40° ≤ T_a ≤ +85°C, I_o =$I_o$min		—	±0.5	—	%V_o
Line Regulation	Reg_{line}	Over V_{in} range		—	±6	±10	mV
Load Regulation	Reg_{load}	Over I_o range		—	±10	±25	mV
Total Output Voltage Variation	ΔV_otot	Includes set-point, line, load, –40° ≤ T_a ≤ +85°C		—	±2	±3	%V_o
Efficiency	η	I_o =4A	V_o =3.3V V_o =2.5V V_o =2.0V V_o =1.8V V_o =1.5V V_o =1.2V V_o =1.0V	— — — — — — —	91 89 85 85 81 80 78	— — — — — — —	%
V_o Ripple (pk-pk)	V_r	20MHz bandwidth		—	20	—	mV_{pp}
Transient Response	t_{tr}	5A/µs load step, 50% to 100% $I_o$max		—	50	—	µs
	ΔV_{tr}	V_o over/undershoot		—	±70	—	mV
Short Circuit Threshold	I_{sc} threshold			—	10	—	A
Switching Frequency	f_s	Over V_{in} and I_o range		300	350	400	kHz
Inhibit (Pin 1) Input High Voltage Input Low Voltage Input Low Current	 V_{IH} V_{IL} I_{IL}	Referenced to –V_{in} (pin 8)		 V_{in}–0.5 –0.2 —	 — — –0.5	 Open (2) +0.5 –	 V mA
Standby Input Current	I_{in} standby	pins 1 & 5 connected		—	+0.5	—	mA
External Output Capacitance	C_{out}	See application schematic		330	—	1,000	µF
External Input Capacitance	C_{in}	See application schematic		100	—	—	µF
Operating Temperature Range	T_a	Over V_{in} range		–40 (3)	—	+85 (4)	°C
Storage Temperature	T_s	—		–40	—	+125	°C
Reliability	MTBF	Per Bellcore TR-332 50% stress, T_a =40°C, ground benign		8.8	—	—	10^6 Hrs
Mechanical Shock	—	Per Mil-Std-883D, method 2002.3, 1ms, half-sine, mounted to a fixture		—	500	—	G's
Mechanical Vibration	—	Mil-Std-883D, Method 2007.2, 20-2000Hz, soldered in PCB		—	20 (5)	—	G's
Weight	—			—	23	—	grams
Flammability	—	Materials meet UL 94V-0					

Notes: *(1) The ISR will operate at no load with reduced specifications.*
(2) The Inhibit control (pin 1) has an internal pull-up and if it is left open circuit the module will operate when input power is applied. The open-circuit voltage is the input voltage V_{in}. Use a discrete MOSFET to control the Inhibit pin, and ensure a transitioin time of less than ≤10µs. Consult the related application note for other interface considerations.
(3) For operation below 0°C, Cin and Cout must have stable characteristics. Use either low ESR tantalum or Oscon® capacitors.
(4) See Safe Operating Area curves or contact the factory for the appropriate derating.
(5) The case pins on through-hole package types (suffixes N & A) must be soldered. For more information consult the applicable package outline drawing.

Input/Output Capacitors: *The PT6440 regulator series requires a 100µF electrolytic (or tantalum) capacitor at the input and 330µF at the output for proper operation in all applications. In addition, the input capacitance, C_{in}, must be rated for a minimum of 350mArms of ripple current, and the ESR of the output capacitor, C_{out}, must less than 100mΩ @100kHz. For transient or dynamic load applications additional output capacitance may be necessary. For more information consult the related application note on capacitor recommendations.*

PT6440 Series Performance; @V_{IN} =5.0V (See Note A)

Efficiency Vs Output Current

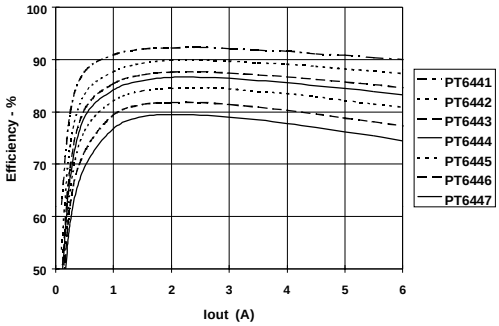

Ripple Vs Output Current

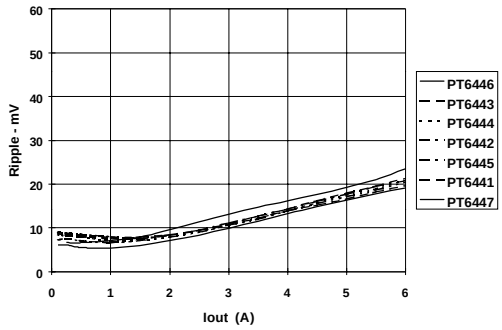

Power Dissipation Vs Output Current

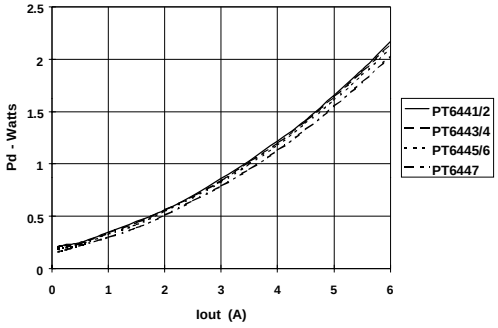

Safe Operating Area Curves (See Note B)

PT6440 Series, V_{IN} =5.0V

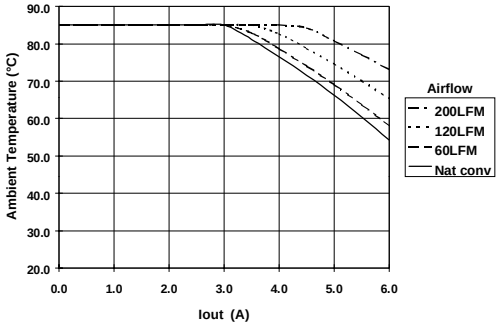

PT6440 Series Performance; @V_{IN} =3.3V (See Note A)

Efficiency Vs Output Current

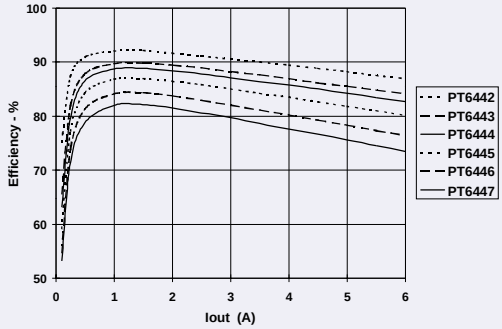

Ripple Vs Output Current

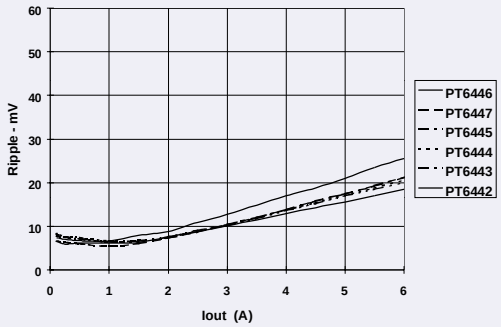

Power Disspiation Vs Output Current

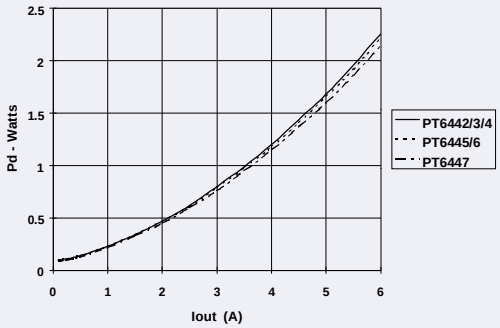

Safe Operating Area Curves (See Note B)

PT6440 Series, V_{IN} =3.3V

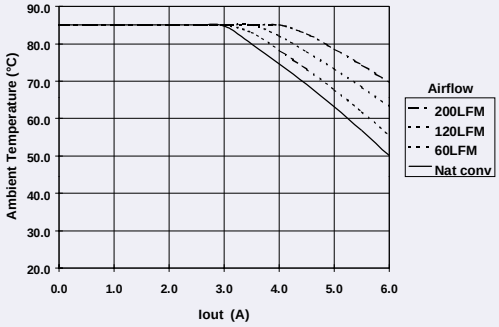

Note A: *Characteristic data has been developed from actual products tested at 25°C. This data is considered typical data for the Converter.*
Note B: *SOA curves represent the conditions at which internal components are at or below the manufacturer's maximum operating temperatures*

Capacitor Recommendations for the PT6440 Excalibur™ 5V/3.3V Bus Step-Down ISRs

Input Capacitors

The recommended input capacitance is determined by 350 milli-amperes (rms) minimum ripple current rating and 100µF minimum capacitance. Capacitors placed at the input must be rated for a minimum of twice the input voltage with +5V operation. Ripple current and ≤200mΩ Equivalent Series Resistance (ESR) values are the major considerations, along with temperature, when selecting the proper input capacitor.

Output Capacitors

The ESR of the required 330µF output capacitor must be less than or equal to 100mΩ. Failure to observe this requirement may lead to regulator instability or oscillation. Electrolytic capacitors have poor ripple performance at frequencies greater than 300kHz but excellent low frequency transient response. Above the ripple frequency, ceramic decoupling capacitors are necessary to improve the transient response and reduce any high frequency noise components apparent during higher current excursions. The preferred low ESR type capacitor part numbers are identified in Table 1.

Tanatalum Capacitors

Tantalum capacitors are recommended on the output bus but only the AVX TPS series, Sprague 593D/594/595 series or Kemet T495/T510 series. These capacitors are specified over many other types due to their higher surge current, power dissipation and ripple current capability. As a caution, the TAJ Series by AVX is not recommended. This series exhibits considerably higher ESR and lower ripple current capability. The TAJ series is also less reliable than the TPS series when determining power dissipation capability. Tantalum or Oscon® types are recommended in applications where ambient temperatures fall below 0°C.

Capacitor Table

Table 1 identifies vendors with acceptable ESR and maximum allowable ripple current (rms) ratings. The suggested minimum quantities per regulator for both the input and output buses are identified.

This is not an extensive capacitor list. Capacitors from other vendors are available with comparable specifications. Those listed are for guidance. The RMS ripple current rating and ESR (Equivalent Series Resistance at 100kHz) are critical parameters necessary to insure both optimum regulator performance and long capacitor life.

Table 1; Input/Output Capacitors

Capacitor Vendor/ Component Series	Capacitor Characteristics					Quantity		
	Working Voltage	Value(µF)	(ESR) Equivalent Series Resistance	85°C Maximum Ripple Current(Irms)	Physical Size(mm)	Input Bus	Output Bus	Vendor Number
Panasonic, FC (Radial)	35V	390µF	0.065Ω	1205mA	12.5×15	1	1	EEUFC1V391S
	35V	100µF	0.117Ω	555mA	8×11.5	1	N/R	EEUFC1V101
	25V	330µF	0.090Ω	755mA	10×12.5	1	1	EEUFC1E331
FC (Surface Mount)	16V	220µF	0.15Ω÷2	670mA	10×10.2	1	2	EEVFC1C221P
	25V	100µF	0.40Ω	450mA	8×10.2	1	N/R	EEVFC1101P
	35V	330µF	0.065Ω	1205mA	12×16.5	1	1	EEVFC1V471LQ
United Chemi-Con LXV/LXZ	25V	330µF	0.084Ω	825mA	10×16	1	1	LXV25VB331M10X16LL
	35V	220µF	0.090Ω÷2	760mA	10×12.5	1	2	LXZ35VB221M10X12LL
FS	10V	330µF	0.025Ω	3500mA	10×10.5	1	1	10FS330M
	10V	100µF	0.040Ω	2100mA	6.3×9.8	1	N/R	10FS100M
Nichicon, PL (Radial)	35V	330µF	0.065Ω	1020mA	12.5×15	1	1	UPL1V331MHH6
UD (Surface Mount)	35V	330µF	0.090Ω	670mA	10×10	1	1	UUD1V331MNR1GS
	35V	220µF	0.17Ω÷2	450mA	8×10	1	2	UUD1V2211MNR1GS
Oscon, SS (Radial)	10V	330µF	0.025Ω	>3500mA	10×10.5	1	1	10SS330M
SV (Surface Mount)	10V	330µF	0.025Ω	>3800mA	10.3×10.3	1	1	10SV300M
	16V	100µF	0.045Ω	2200mA	10.3×10.3	1	N/R	16SV100M
AVX Tantalum TPS	10V	330µF	0.100Ω	1414mA	7.3L	1	1	TPSV337M010R0100
	10V	330µF	0.060Ω	1826mA	×4.3W	1	1	TPSV337M010R0060
	10V	150µF	0.100Ω	1095mA	×4.1H	1	2	TPSD107M010R100
Kemet, T510	10V	330µF	0.033Ω	1400mA	7.3L ×5.7W	1	1	T510X337M010AS
T495	10V	220µF	0.070Ω÷2	>2000mA	×4.0H	1	2	T495X227M010AS
Sprague	10V	330µF	0.045Ω	2350mA	7.3L ×6W	1	1	594D337X0010R2T
594D	10V	150µF	0.090Ω	1100mA	×4.1H	1	2	594D157X0010C2T

Adjusting the Output Voltage of the PT6440 Excalibur™ 5V/3.3V Bus Step-Down ISRs

The output voltage of the PT6440 Series ISRs may be adjusted higher or lower than the factory trimmed pre-set voltage with the addition of a single external resistor. Table 1 gives the allowable adjustment range for each model for either series as V_a (min) and V_a (max).

Adjust Up: An increase in the output voltage is obtained by adding a resistor R_2, between V_o Adj (pin 12) and GND (pins 5–8).

Adjust Down: Add a resistor (R_1), between V_o Adj (pin 12) and V_{out} (pins 9–11).

Figure 1

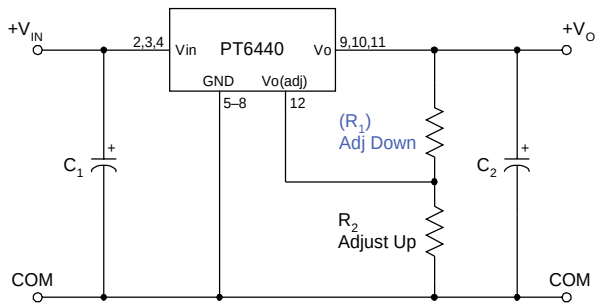

The values of (R_1) [adjust down], and R_2 [adjust up], can also be calculated using the following formulas. Refer to Figure 1 and Table 2 for both the placement and value of the required resistor; either (R_1) or R_2 as appropriate.

$$(R_1) = \frac{R_o (V_a - 0.9)}{V_o - V_a} - R_s \quad k\Omega$$

$$R_2 = \frac{0.9\, R_o}{V_a - V_o} - R_s \quad k\Omega$$

Where:
V_o = Original output voltage
V_a = Adjusted output voltage
R_o = The resistance value from Table 1
R_s = The series resistance from Table 1

Notes:

1. Use only a single 1% resistor in either the (R_1) or R_2 location. Place the resistor as close to the ISR as possible.
2. Never connect capacitors from V_o adj to either GND or V_{out}. Any capacitance added to the V_o adjust pin will affect the stability of the ISR.
3. For each model, adjustments to the output voltage may place additional limits on the minimum input voltage. The revised minimum input voltage must comply with the following requirement.

$V_{in}(min) = (V_a + 0.5)V$ or as specified in the data sheet, whichever is greater.

Table 1

ISR ADJUSTMENT RANGE AND FORMULA PARAMETERS

Series Pt. #	PT6441	PT6442	PT6443	PT6444	PT6445	PT6446	PT6447
V_o (nom)	3.3	2.5	2.0	1.8	1.5	1.2	1.0
V_a (min)	2.88	1.97	1.64	1.5	1.3	1.08	0.97
V_a (max)	3.5	2.95	2.45	2.25	1.95	1.65	1.45
R_o (kΩ)	10.0	10.0	10.0	10.0	10.0	10.0	10.2
R_s (kΩ)	49.9	20.0	20.0	20.0	20.0	20.0	20.0

PT6440 Series

Table 2

ISR ADJUSTMENT RESISTOR VALUES

Series Pt. #	PT6441	PT6442	PT6443	PT6444	PT6445	PT6446	PT6447
V_o (nom)	3.3	2.5	2.0	1.8	1.5	1.2	1.0
V_a (req.d)							
0.97							(0.4)kΩ
1.0							
1.05							164.0kΩ
1.1						(0.0)kΩ	71.8kΩ
1.15						(30.0)kΩ	41.2kΩ
1.2							25.9kΩ
1.25						160.0kΩ	16.7kΩ
1.3					(0.0)kΩ	70.0kΩ	10.6kΩ
1.35					(10.0)kΩ	40.0kΩ	6.2kΩ
1.4					(30.0)kΩ	25.0kΩ	3.0kΩ
1.45					(90.0)kΩ	16.0kΩ	0.4kΩ
1.5				(0.0)kΩ		10.0kΩ	
1.55				(6.0)kΩ	160.0kΩ	5.7kΩ	
1.6				(15.0)kΩ	70.0kΩ	2.5kΩ	
1.65			(1.4)kΩ	(30.0)kΩ	40.0kΩ	0.0kΩ	
1.7			(6.7)kΩ	(60.0)kΩ	25.0kΩ		
1.75			(14.0)kΩ	(150.0)kΩ	16.0kΩ		
1.8			(25.0)kΩ		10.0kΩ		
1.85			(43.3)kΩ	160.0kΩ	5.7kΩ		
1.9			(80.0)kΩ	70.0kΩ	2.5kΩ		
1.95			(190.0)kΩ	40.0kΩ	0.0kΩ		
2.0		(2.0)kΩ		25.0kΩ			
2.05		(5.6)kΩ	160.0kΩ	16.0kΩ			
2.1		(10.0)kΩ	70.0kΩ	10.0kΩ			
2.15		(15.7)kΩ	40.0kΩ	5.7kΩ			
2.2		(23.3)kΩ	25.0kΩ	2.5kΩ			
2.25		(34.0)kΩ	16.0kΩ	0.0kΩ			
2.3		(50.0)kΩ	10.0kΩ				
2.35		(76.7)kΩ	5.7kΩ				
2.4		(130.0)kΩ	2.5kΩ				
2.45		(284.0)kΩ	0.0kΩ				
2.5							
2.55		160.0kΩ					
2.6		70.0kΩ					
2.65		40.0kΩ					
2.7		25.0kΩ					
2.75		16.0kΩ					
2.8		10.0kΩ					
2.85		5.7kΩ					
2.9	(0.0kΩ	2.5kΩ					
2.95	(8.5)kΩ	0.0kΩ					
3.0	(20.1)kΩ						
3.05	(36.1)kΩ						
3.1	(60.1)kΩ						
3.15	(100.0)kΩ						
3.2	(180.0)kΩ						
3.25	(420.0)kΩ						
3.3							
3.35	130.0kΩ						
3.4	40.1kΩ						
3.45	10.1kΩ						
3.48	0.0kΩ						

R1 = (Blue) R2 = Black

Using the Inhibit Function on the PT6440 Excalibur™ 5V/3.3V Bus Step-Down ISRs

For applications requiring output voltage On/Off control, the 12-pin PT6440 series products incorporate an *Inhibit* function. This function may be used wherever there is a requirement for the module to be switched off. The function is provided by the *Inhibit* control (pin 1) input.

The ISR functions normally with pin 1 open-circuit, [1] providing a regulated output whenever a valid source voltage is applied to V_{in}, (pins 2–4), with respect to GND (pins 5–8). When a low-level ground signal is applied to pin 1, the regulator output is disabled.

Figure 1 shows an application schematic, which details the typical use of the Inhibit function. Note the discrete transistor (Q_1). The Inhibit control has its own internal pull-up to $+V_{in}$ potential. An open-collector or open-drain device is required to control this pin. [2]

The Inhibit pin control thresholds are given in Table 1. Equation 1 may be used to determine the approximate current drawn from the input source, and by Q_1 when the regulator is placed in the inhibit state.

Table 1; Inhibit Control Requirements [3]

Parameter	Min	Max
Enable (V_{IH})	V_{in} – 0.5	V_{in}
Disable (V_{IL})	-0.2V	0.5V
Transition Time	10µs [4]	

Equation 1; Off Input Current

$$I_{stby} = V_{in} \div 10k\Omega \quad \pm 20\%$$

Figure 1

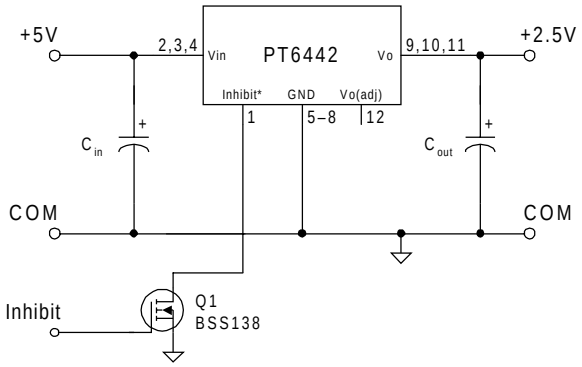

Turn-On Time: In the circuit of Figure 1, turning Q_1 on applies a low-voltage to the *Inhibit* control (pin 1) and disables the regulator output. Correspondingly, turning Q_1 off allows the *Inhibit* control pin to be pulled high by its internal pull-up resistor. The ISR produces a fully regulated output voltage within 10 milliseconds of the release of the Inhibit control pin. The actual turn-on time will vary with input voltage, output load, and the total amount of load capacitance. Figure 2 shows the typical rise in both output voltage and input current for a PT6441 (3.3V) following the turn-off of Q_1 at time t =0. The waveform was measured with a 5Vdc input voltage, and 6 Adc resistive load.

Figure 2

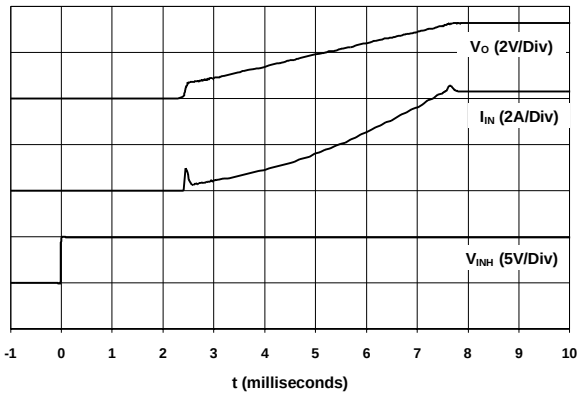

Notes:

1. Use an open-collector device (preferably a discrete transistor) for the Inhibit input. A pull-up resistor is not necessary. To disable the output voltage, the control pin should be pulled low to less than +0.5VDC.
2. Do not control the Inhibit input with an external DC voltage. This will lead to erratic operation of the ISR and may over-stress the regulator.
3. Avoid capacitance greater than 500pF at the Inhibit control pin. Excessive capacitance at this pin will cause the ISR to produce a pulse on the output voltage bus at turn-on.
4. Keep the On/Off transition to less than 10µs. This prevents erratic operation of the ISR, which could cause the output voltage to be momentarily higher than normal.

IMPORTANT NOTICE

Texas Instruments Incorporated and its subsidiaries (TI) reserve the right to make corrections, modifications, enhancements, improvements, and other changes to its products and services at any time and to discontinue any product or service without notice. Customers should obtain the latest relevant information before placing orders and should verify that such information is current and complete. All products are sold subject to TI's terms and conditions of sale supplied at the time of order acknowledgment.

TI warrants performance of its hardware products to the specifications applicable at the time of sale in accordance with TI's standard warranty. Testing and other quality control techniques are used to the extent TI deems necessary to support this warranty. Except where mandated by government requirements, testing of all parameters of each product is not necessarily performed.

TI assumes no liability for applications assistance or customer product design. Customers are responsible for their products and applications using TI components. To minimize the risks associated with customer products and applications, customers should provide adequate design and operating safeguards.

TI does not warrant or represent that any license, either express or implied, is granted under any TI patent right, copyright, mask work right, or other TI intellectual property right relating to any combination, machine, or process in which TI products or services are used. Information published by TI regarding third–party products or services does not constitute a license from TI to use such products or services or a warranty or endorsement thereof. Use of such information may require a license from a third party under the patents or other intellectual property of the third party, or a license from TI under the patents or other intellectual property of TI.

Reproduction of information in TI data books or data sheets is permissible only if reproduction is without alteration and is accompanied by all associated warranties, conditions, limitations, and notices. Reproduction of this information with alteration is an unfair and deceptive business practice. TI is not responsible or liable for such altered documentation.

Resale of TI products or services with statements different from or beyond the parameters stated by TI for that product or service voids all express and any implied warranties for the associated TI product or service and is an unfair and deceptive business practice. TI is not responsible or liable for any such statements.

Mailing Address:

Texas Instruments
Post Office Box 655303
Dallas, Texas 75265

Copyright © 2002, Texas Instruments Incorporated

Looking for pricing, stock, or lifecycle information?

Click below to explore more details on WIN SOURCE:

- View PT6441A on WIN SOURCE
- Texas Instruments Information

Optimize Your Supply Chain with WIN SOURCE Solutions

- Global Sourcing Solution
- Obsolete Management
- Cost Control Management
- Shortage Management
- Alternative Solution
- Excess Inventory Management