THE DATASHEET OF

262114-10

REV.	DATE	DESCRIPTION
NC	05/31/06	INITIAL RELEASE

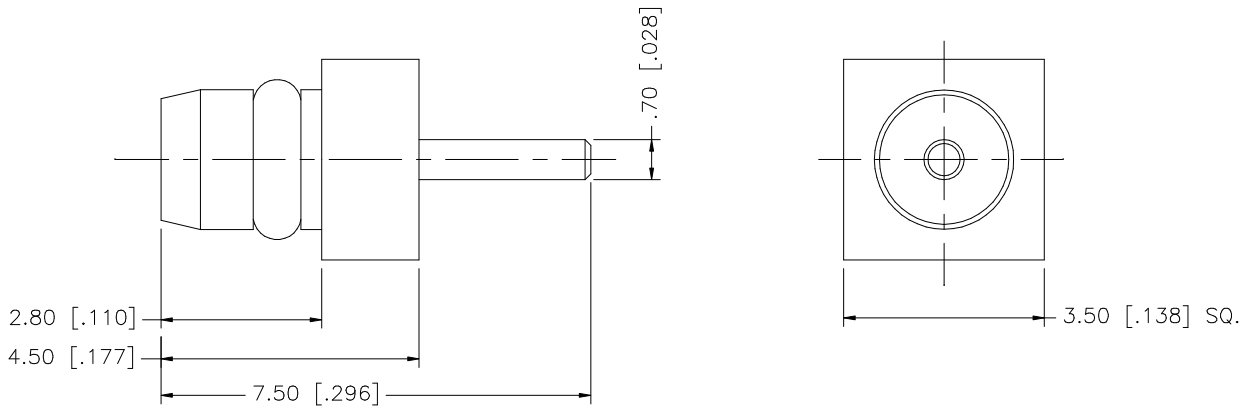

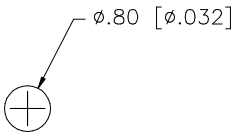

PCB MOUNTING HOLES

	DESCRIPTION	MATERIAL	FINISH	QTY
8				
7				
6				
5				
4	RETAINER RING	PHOS. BRONZE	GOLD	1
3	CONTACT PIN	BRASS	GOLD	1
2	INSULATOR	TEFLON	NATURAL	1
1	BODY	BRASS	GOLD	1

UNLESS OTHERWISE SPECIFIED DIMENSIONS ARE IN MILLIMETERS. DIMENSIONS IN [ ] ARE IN INCHES AND FOR CUSTOMER REFERANCE ONLY.

UNLESS OTHERWISE SPECIFIED TOLERANCES FOR MILLIMETERS ARE:
0.5 – 8mm ± 0.20mm
8 – 30mm ± 0.40mm
30 – 120mm ± 0.50mm

UNLESS OTHERWISE SPECIFIED TOLERANCES FOR INCHES ARE:
.020 – .315 = ± 0.007"
.315 – 1.180 = ± 0.015"
1.180 – 4.724 = ± 0.020"

DO NOT SCALE DRAWING

APPROVALS		DATE
DRAWN	G.R.S.	05/31/06
CHECKED		
ISSUED		
SHEET	1 OF 1	

CAD FILE C:/262/262114–10.DWG

Amphenol Connex

PART DESCRIPTION
MMCX P.C.B. MOUNT PLUG
(CENTER CONTACT ONLY)

PART NO. 262114–10

DWG. NO. 262114–10.DWG | REV. NC | SIZE A | SCALE NA

Looking for pricing, stock, or lifecycle information?

Click below to explore more details on WIN SOURCE:

- View 262114-10 on WIN SOURCE
- Amphenol Information

Optimize Your Supply Chain with WIN SOURCE Solutions

- Global Sourcing Solution
- Obsolete Management
- Cost Control Management
- Shortage Management
- Alternative Solution
- Excess Inventory Management