THE DATASHEET OF

NVMFS5C406NT1G

www.win-source.net 0086-755-83957316

MOSFET - Power, Single N-Channel
40 V, 0.8 mΩ, 353 A

NVMFS5C406N

$V_{(BR)DSS}$	$R_{DS(ON)}$ MAX	I_D MAX
40 V	0.8 mΩ @ 10 V	353 A

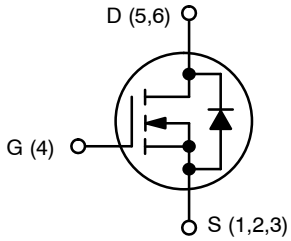

N−CHANNEL MOSFET

Features
- Small Footprint (5x6 mm) for Compact Design
- Low $R_{DS(on)}$ to Minimize Conduction Losses
- Low Q_G and Capacitance to Minimize Driver Losses
- NVMFS5C406NWF − Wettable Flank Option for Enhanced Optical Inspection
- AEC−Q101 Qualified and PPAP Capable
- These Devices are Pb−Free and are RoHS Compliant

MAXIMUM RATINGS (T_J = 25°C unless otherwise noted)

Parameter			Symbol	Value	Unit
Drain−to−Source Voltage			V_{DSS}	40	V
Gate−to−Source Voltage			V_{GS}	±20	V
Continuous Drain Current $R_{\theta JC}$ (Notes 1, 3)	Steady State	T_C = 25°C	I_D	353	A
		T_C = 100°C		249	
Power Dissipation $R_{\theta JC}$ (Note 1)		T_C = 25°C	P_D	179	W
		T_C = 100°C		90	
Continuous Drain Current $R_{\theta JA}$ (Notes 1, 2, 3)	Steady State	T_A = 25°C	I_D	52	A
		T_A = 100°C		37	
Power Dissipation $R_{\theta JA}$ (Notes 1, 2)		T_A = 25°C	P_D	3.9	W
		T_A = 100°C		1.9	
Pulsed Drain Current	T_A = 25°C, t_p = 10 μs		I_{DM}	900	A
Operating Junction and Storage Temperature Range			T_J, T_{stg}	−55 to +175	°C
Source Current (Body Diode)			I_S	149	A
Single Pulse Drain−to−Source Avalanche Energy ($I_{L(pk)}$ = 32.5 A)			E_{AS}	439	mJ
Lead Temperature for Soldering Purposes (1/8″ from case for 10 s)			T_L	260	°C

Stresses exceeding those listed in the Maximum Ratings table may damage the device. If any of these limits are exceeded, device functionality should not be assumed, damage may occur and reliability may be affected.

THERMAL RESISTANCE MAXIMUM RATINGS

Parameter	Symbol	Value	Unit
Junction−to−Case − Steady State	$R_{\theta JC}$	0.84	°C/W
Junction−to−Ambient − Steady State (Note 2)	$R_{\theta JA}$	38.7	

1. The entire application environment impacts the thermal resistance values shown, they are not constants and are only valid for the particular conditions noted.
2. Surface−mounted on FR4 board using a 650 mm^2, 2 oz. Cu pad.
3. Maximum current for pulses as long as 1 second is higher but is dependent on pulse duration and duty cycle.

MARKING DIAGRAMS

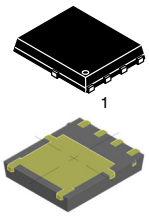

DFN5
CASE 506EZ

DFNW5
CASE 507BA

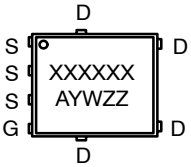

XXXXXX = Specific Device Code
A = Assembly Location
Y = Year
W = Work Week
ZZ = Lot Traceability

ORDERING INFORMATION
See detailed ordering, marking and shipping information in the package dimensions section on page 5 of this data sheet.

© Semiconductor Components Industries, LLC, 2018

ELECTRICAL CHARACTERISTICS (T_J = 25°C unless otherwise specified)

Parameter	Symbol	Test Condition		Min	Typ	Max	Unit
OFF CHARACTERISTICS							
Drain−to−Source Breakdown Voltage	$V_{(BR)DSS}$	V_{GS} = 0 V, I_D = 250 μA		40	–	–	V
Drain−to−Source Breakdown Voltage Temperature Coefficient	$V_{(BR)DSS}/T_J$			–	16.7	–	mV/°C
Zero Gate Voltage Drain Current	I_{DSS}	V_{GS} = 0 V, V_{DS} = 40 V	T_J = 25 °C	–	–	10	μA
			T_J = 125°C	–	–	250	
Gate−to−Source Leakage Current	I_{GSS}	V_{DS} = 0 V, V_{GS} = 20 V		–	–	100	nA
ON CHARACTERISTICS (Note 4)							
Gate Threshold Voltage	$V_{GS(TH)}$	V_{GS} = V_{DS}, I_D = 280 μA		2.0	–	4.0	V
Threshold Temperature Coefficient	$V_{GS(TH)}/T_J$			–	−8.0	–	mV/°C
Drain−to−Source On Resistance	$R_{DS(on)}$	V_{GS} = 10 V	I_D = 50 A	–	0.64	0.8	mΩ
Forward Transconductance	g_{FS}	V_{DS} =15 V, I_D = 50 A		–	190	–	S
CHARGES, CAPACITANCES & GATE RESISTANCE							
Input Capacitance	C_{ISS}	V_{GS} = 0 V, f = 1 MHz, V_{DS} = 20 V		–	7288	–	pF
Output Capacitance	C_{OSS}			–	4530	–	
Reverse Transfer Capacitance	C_{RSS}			–	150	–	
Total Gate Charge	$Q_{G(TOT)}$	V_{GS} = 10 V, V_{DS} = 20 V; I_D = 50 A		–	110	–	nC
Threshold Gate Charge	$Q_{G(TH)}$	V_{GS} = 10 V, V_{DS} = 20 V; I_D = 50 A		–	21	–	
Gate−to−Source Charge	Q_{GS}			–	33	–	
Gate−to−Drain Charge	Q_{GD}			–	20	–	
Plateau Voltage	V_{GP}			–	4.7	–	V
SWITCHING CHARACTERISTICS (Note 5)							
Turn−On Delay Time	$t_{d(ON)}$	V_{GS} = 10 V, V_{DS} = 32 V, I_D = 50 A, R_G = 2.5 Ω		–	48	–	ns
Rise Time	t_r			–	116	–	
Turn−Off Delay Time	$t_{d(OFF)}$			–	133	–	
Fall Time	t_f			–	52	–	
DRAIN−SOURCE DIODE CHARACTERISTICS							
Forward Diode Voltage	V_{SD}	V_{GS} = 0 V, I_S = 50 A	T_J = 25°C	–	0.78	1.2	V
			T_J = 125°C	–	0.64	–	
Reverse Recovery Time	t_{RR}	V_{GS} = 0 V, dIS/dt = 100 A/μs, I_S = 50 A		–	82	–	ns
Charge Time	t_a			–	39	–	
Discharge Time	t_b			–	43	–	
Reverse Recovery Charge	Q_{RR}			–	120	–	nC

Product parametric performance is indicated in the Electrical Characteristics for the listed test conditions, unless otherwise noted. Product performance may not be indicated by the Electrical Characteristics if operated under different conditions.

4. Pulse Test: pulse width ≤ 300 μs, duty cycle ≤ 2%.
5. Switching characteristics are independent of operating junction temperatures.

TYPICAL CHARACTERISTICS

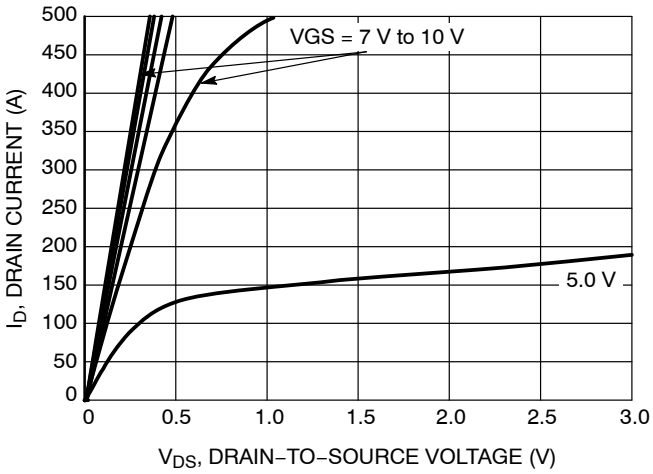

Figure 1. On−Region Characteristics

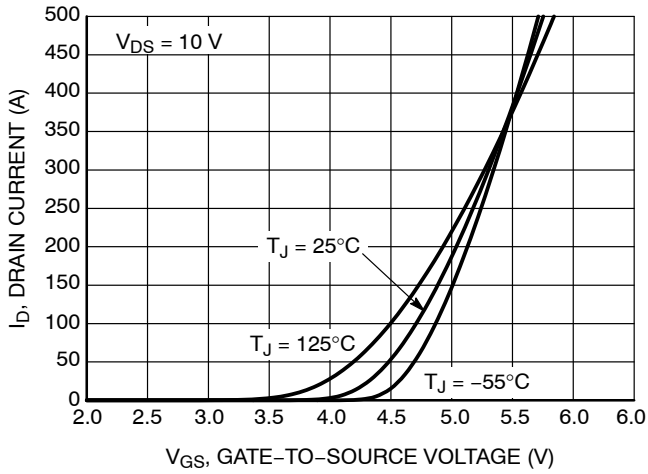

Figure 2. Transfer Characteristics

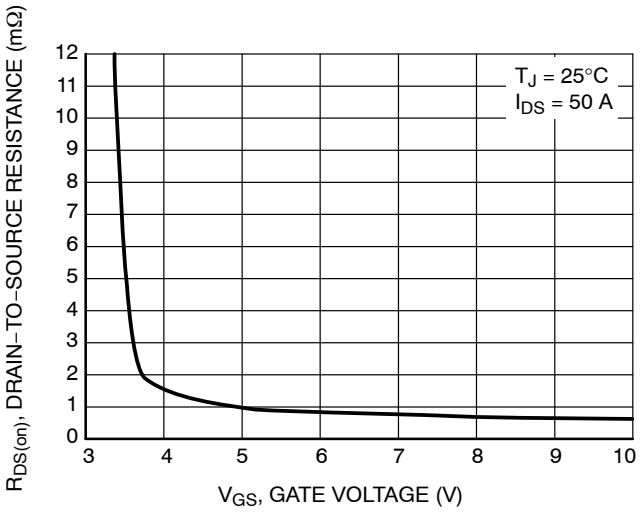

Figure 3. On−Resistance vs. Gate−to−Source Voltage

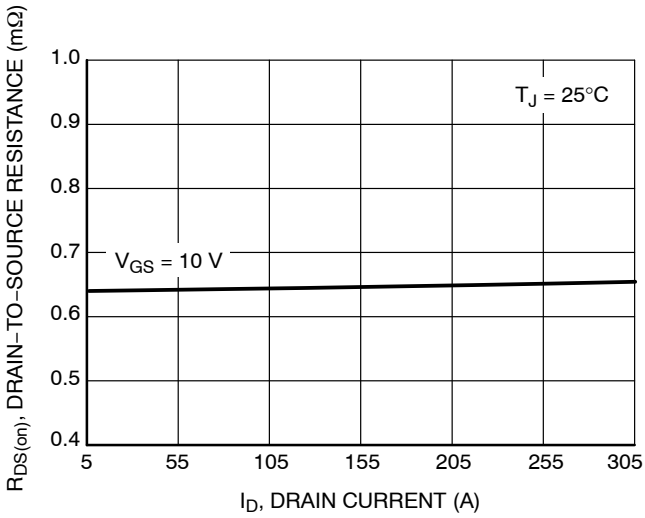

Figure 4. On−Resistance vs. Drain Current and Gate Voltage

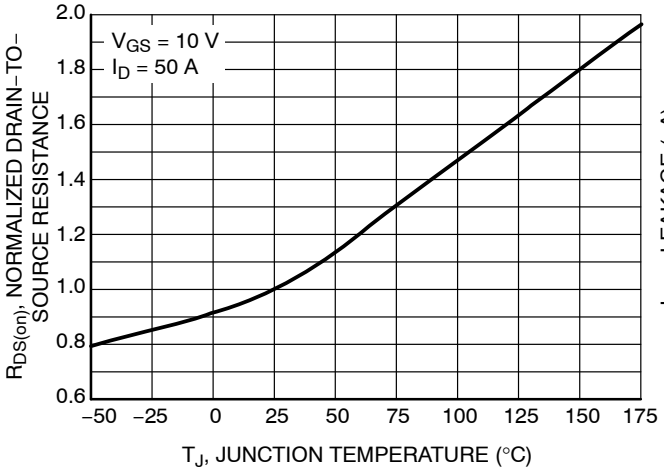

Figure 5. On−Resistance Variation with Temperature

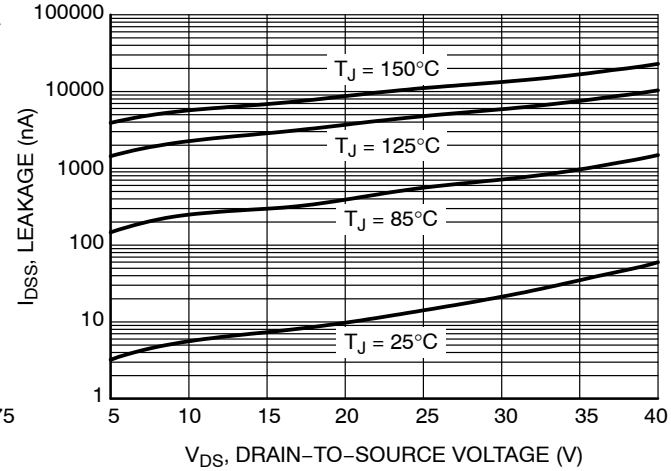

Figure 6. Drain−to−Source Leakage Current vs. Voltage

TYPICAL CHARACTERISTICS

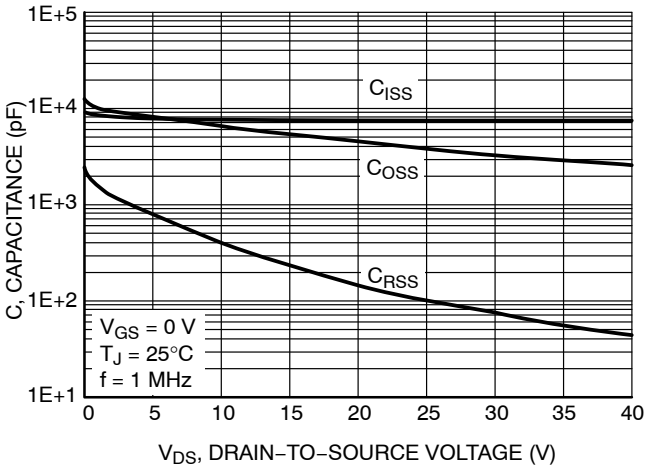

Figure 7. Capacitance Variation

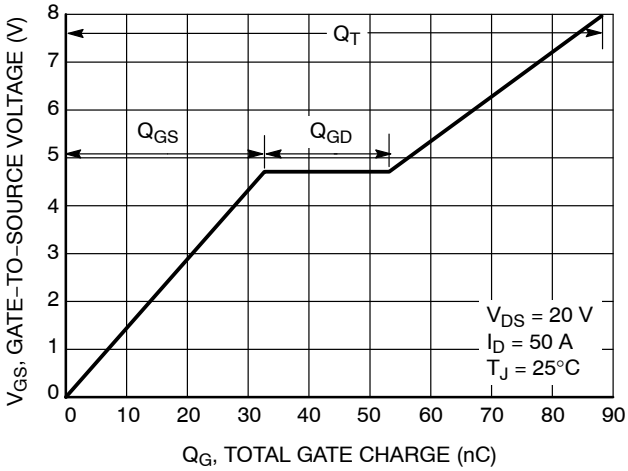

Figure 8. Gate−to−Source and Drain−to−Source Voltage vs. Total Charge

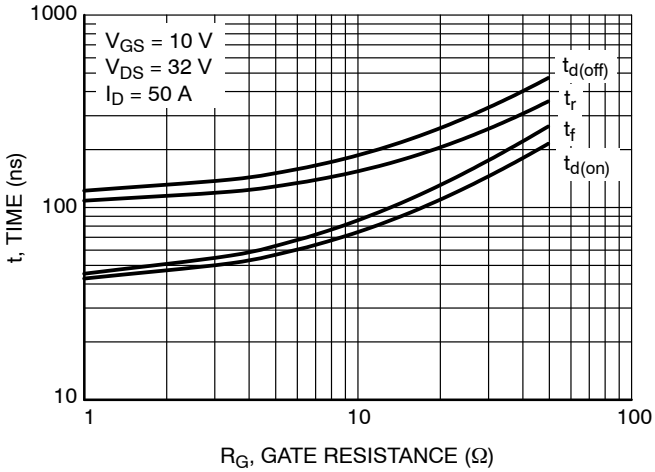

Figure 9. Resistive Switching Time Variation vs. Gate Resistance

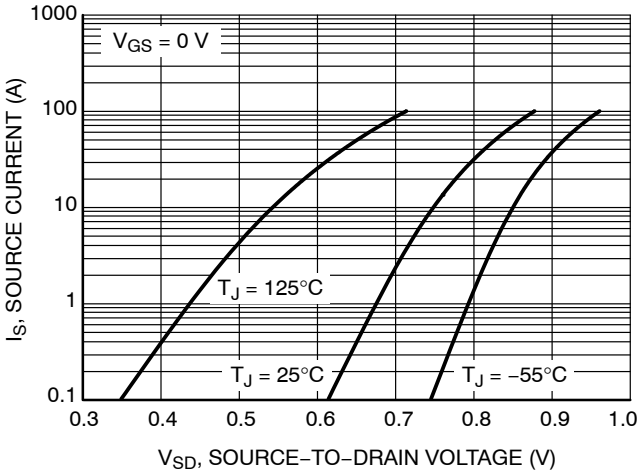

Figure 10. Diode Forward Voltage vs. Current

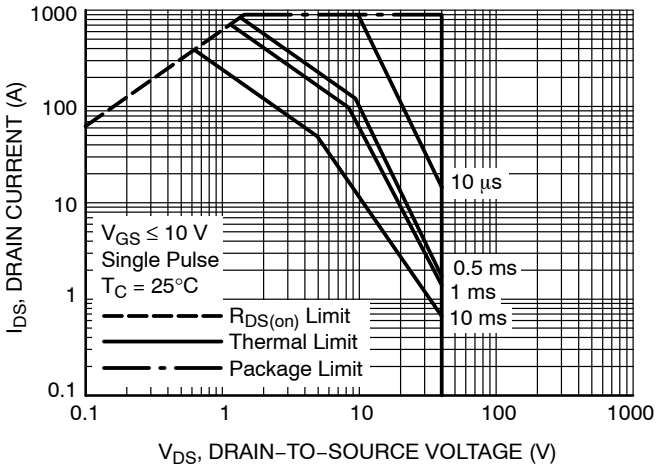

Figure 11. Maximum Rated Forward Biased Safe Operating Area

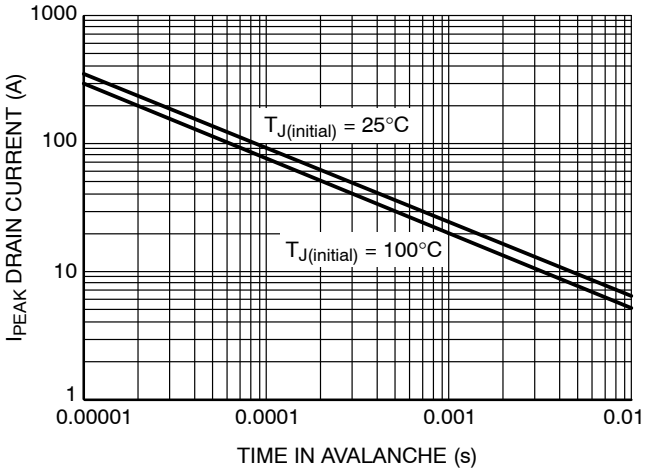

Figure 12. I_{PEAK} vs. Time in Avalanche

TYPICAL CHARACTERISTICS

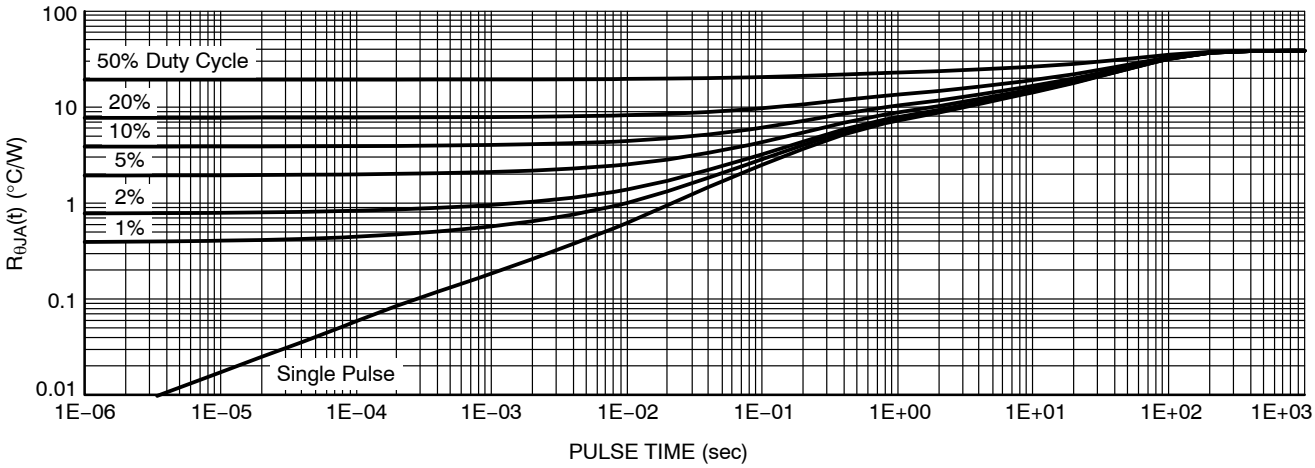

Figure 13. Thermal Characteristics

DEVICE ORDERING INFORMATION

Device	Case	Marking	Package	Shipping†
NVMFS5C406NT1G	506EZ	5C406N	DFN5 (Pb−Free)	1500 / Tape & Reel
NVMFS5C406NWFT1G	507BA	406NWF	DFNW5 (Pb−Free, Wettable Flanks)	1500 / Tape & Reel

†For information on tape and reel specifications, including part orientation and tape sizes, please refer to our Tape and Reel Packaging Specifications Brochure, BRD8011/D.

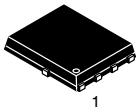

1

SCALE 2:1

DFN5 5x6, 1.27P (SO−8FL)
CASE 506EZ
ISSUE A

DATE 25 AUG 2021

NOTES:
1. DIMENSIONING AND TOLERANCING PER ASME Y14.5M, 2009.
2. CONTROLLING DIMENSION: MILLIMETERS
3. DIMENSIONS D1 AND E1 DO NOT INCLUDE MOLD FLASH, PROTRUSIONS, OR GATE BURRS.

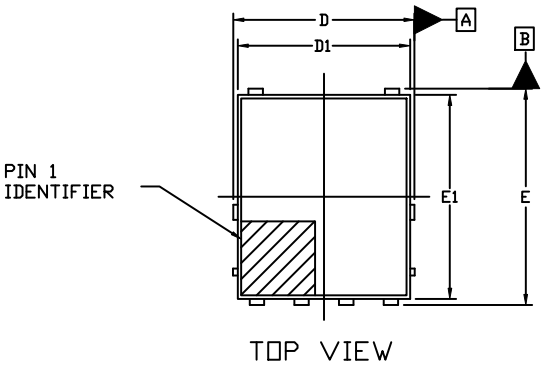

	MILLIMETERS		
DIM	MIN.	NOM.	MAX.
A	0.90	1.00	1.10
A1	0.00	---	0.05
b	0.33	0.41	0.51
c	0.23	0.28	0.33
D	5.00	5.15	5.30
D1	4.70	4.90	5.10
D2	3.80	4.00	4.20
E	6.00	6.15	6.30
E1	5.70	5.90	6.10
E2	3.45	3.80	3.85
e	1.27 BSC		
G	0.51	0.575	0.71
k	1.10	1.20	1.40
L	0.51	0.575	0.71
L1	0.125 REF		
M	3.00	3.40	3.80
θ	0°	---	12°

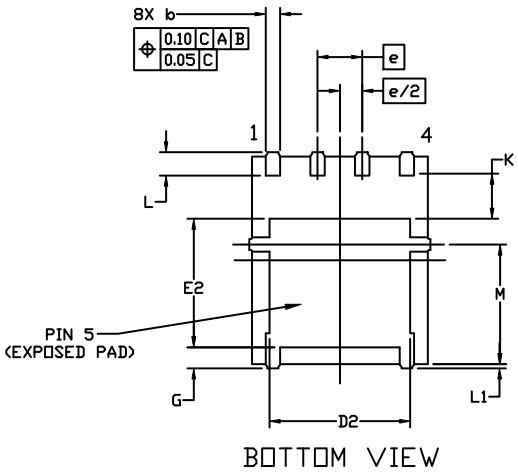

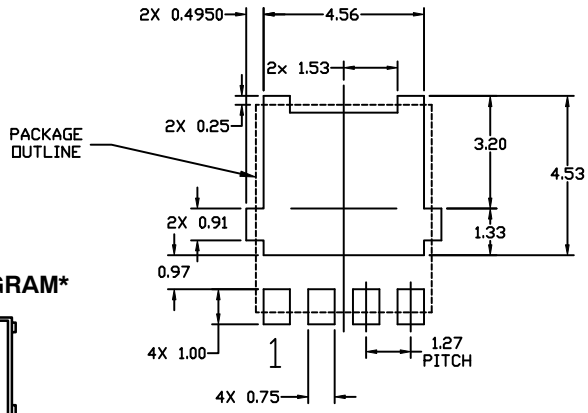

* For additional information on our Pb-Free strategy and soldering details, please download the ON Semiconductor Soldering and Mounting Techniques Reference Manual, SOLDERRM/D.

GENERIC
MARKING DIAGRAM*

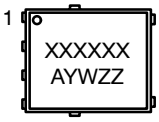

XXXXXX = Specific Device Code
A = Assembly Location
Y = Year
W = Work Week
ZZ = Lot Traceability

*This information is generic. Please refer to device data sheet for actual part marking. Pb−Free indicator, “G” or microdot “ ▪”, may or may not be present. Some products may not follow the Generic Marking.

DOCUMENT NUMBER:	98AON24855H	Electronic versions are uncontrolled except when accessed directly from the Document Repository. Printed versions are uncontrolled except when stamped “CONTROLLED COPY” in red.
DESCRIPTION:	DFN5 5x6, 1.27P (SO−8FL)	PAGE 1 OF 1

ON Semiconductor and ON are trademarks of Semiconductor Components Industries, LLC dba ON Semiconductor or its subsidiaries in the United States and/or other countries. ON Semiconductor reserves the right to make changes without further notice to any products herein. ON Semiconductor makes no warranty, representation or guarantee regarding the suitability of its products for any particular purpose, nor does ON Semiconductor assume any liability arising out of the application or use of any product or circuit, and specifically disclaims any and all liability, including without limitation special, consequential or incidental damages. ON Semiconductor does not convey any license under its patent rights nor the rights of others.

© Semiconductor Components Industries, LLC, 2018

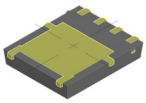

DFNW5 5x6 (FULL−CUT SO8FL WF)
CASE 507BA
ISSUE A

DATE 03 FEB 2021

NOTES:
1. DIMENSIONING AND TOLERANCING PER ASME Y14.5M, 2009.
2. CONTROLLING DIMENSION: MILLIMETERS
3. DIMENSIONS D1 AND E1 DO NOT INCLUDE MOLD FLASH, PROTRUSIONS, OR GATE BURRS.
4. THIS PACKAGE CONTAINS WETTABLE FLANK DESIGN FEATURES TO AID IN FILLET FORMATION ON THE LEADS DURING MOUNTING.

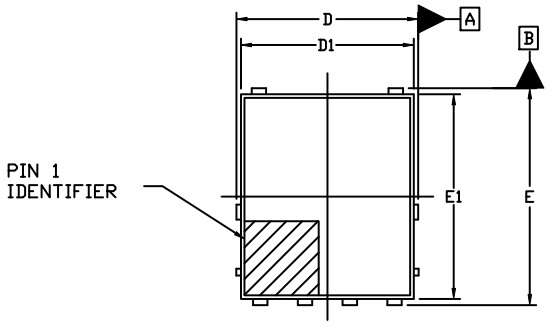

TOP VIEW

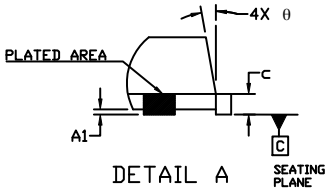

DETAIL A

	MILLIMETERS		
DIM	MIN.	NOM.	MAX.
A	0.90	1.00	1.10
A1	0.00	---	0.05
b	0.33	0.41	0.51
c	0.23	0.28	0.33
D	5.00	5.15	5.30
D1	4.70	4.90	5.10
D2	3.80	4.00	4.20
E	6.00	6.15	6.30
E1	5.70	5.90	6.10
E2	3.45	3.65	3.85
e	1.27 BSC		
G	0.51	0.575	0.71
K	1.20	1.35	1.50
L	0.51	0.575	0.71
L1	0.150 REF		
M	3.00	3.40	3.80
θ	0°	---	12°

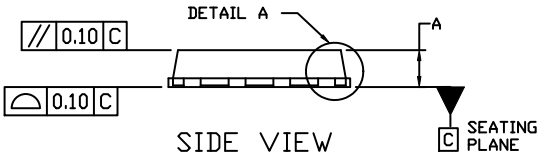

SIDE VIEW

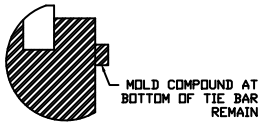

DETAIL B

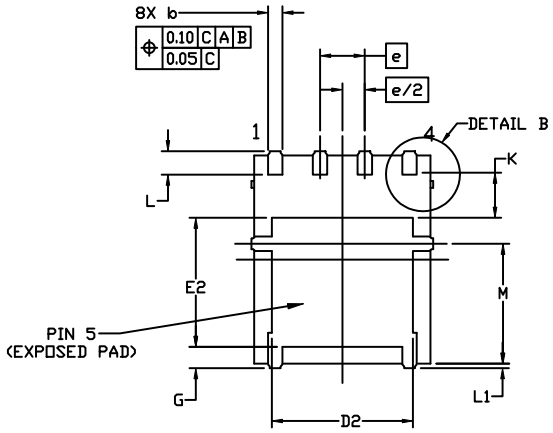

BOTTOM VIEW

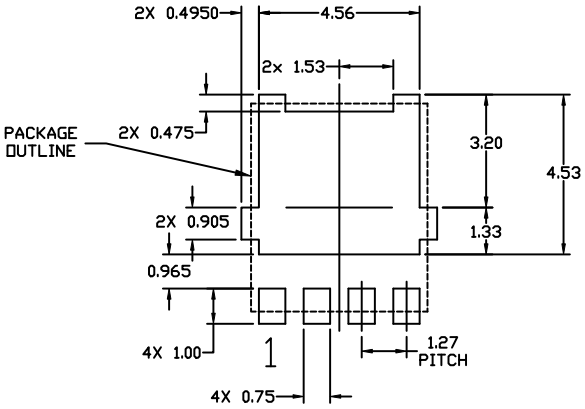

RECOMMENDED
MOUNTING FOOTPRINT

* For additional information on our Pb−Free strategy and soldering details, please download the ON Semiconductor Soldering and Mounting Techniques Reference Manual, SOLDERRM/D.

GENERIC
MARKING DIAGRAM*

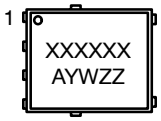

XXXXXX = Specific Device Code
A = Assembly Location
Y = Year
W = Work Week
ZZ = Lot Traceability

*This information is generic. Please refer to device data sheet for actual part marking. Pb−Free indicator, “G” or microdot “ ▪”, may or may not be present. Some products may not follow the Generic Marking.

DOCUMENT NUMBER:	98AON26450H	Electronic versions are uncontrolled except when accessed directly from the Document Repository. Printed versions are uncontrolled except when stamped “CONTROLLED COPY” in red.
DESCRIPTION:	DFNW5 5x6 (FULL−CUT SO8FL WF)	PAGE 1 OF 1

onsemi and onsemi are trademarks of Semiconductor Components Industries, LLC dba **onsemi** or its subsidiaries in the United States and/or other countries. **onsemi** reserves the right to make changes without further notice to any products herein. **onsemi** makes no warranty, representation or guarantee regarding the suitability of its products for any particular purpose, nor does **onsemi** assume any liability arising out of the application or use of any product or circuit, and specifically disclaims any and all liability, including without limitation special, consequential or incidental damages. **onsemi** does not convey any license under its patent rights nor the rights of others.

onsemi, onsemi, and other names, marks, and brands are registered and/or common law trademarks of Semiconductor Components Industries, LLC dba "**onsemi**" or its affiliates and/or subsidiaries in the United States and/or other countries. **onsemi** owns the rights to a number of patents, trademarks, copyrights, trade secrets, and other intellectual property. A listing of **onsemi**'s product/patent coverage may be accessed at www.onsemi.com/site/pdf/Patent−Marking.pdf. **onsemi** reserves the right to make changes at any time to any products or information herein, without notice. The information herein is provided "as−is" and **onsemi** makes no warranty, representation or guarantee regarding the accuracy of the information, product features, availability, functionality, or suitability of its products for any particular purpose, nor does **onsemi** assume any liability arising out of the application or use of any product or circuit, and specifically disclaims any and all liability, including without limitation special, consequential or incidental damages. Buyer is responsible for its products and applications using **onsemi** products, including compliance with all laws, regulations and safety requirements or standards, regardless of any support or applications information provided by **onsemi**. "Typical" parameters which may be provided in **onsemi** data sheets and/or specifications can and do vary in different applications and actual performance may vary over time. All operating parameters, including "Typicals" must be validated for each customer application by customer's technical experts. **onsemi** does not convey any license under any of its intellectual property rights nor the rights of others. **onsemi** products are not designed, intended, or authorized for use as a critical component in life support systems or any FDA Class 3 medical devices or medical devices with a same or similar classification in a foreign jurisdiction or any devices intended for implantation in the human body. Should Buyer purchase or use **onsemi** products for any such unintended or unauthorized application, Buyer shall indemnify and hold **onsemi** and its officers, employees, subsidiaries, affiliates, and distributors harmless against all claims, costs, damages, and expenses, and reasonable attorney fees arising out of, directly or indirectly, any claim of personal injury or death associated with such unintended or unauthorized use, even if such claim alleges that **onsemi** was negligent regarding the design or manufacture of the part. **onsemi** is an Equal Opportunity/Affirmative Action Employer. This literature is subject to all applicable copyright laws and is not for resale in any manner.

ADDITIONAL INFORMATION

TECHNICAL PUBLICATIONS:
Technical Library: www.onsemi.com/design/resources/technical−documentation
onsemi Website: www.onsemi.com

ONLINE SUPPORT: www.onsemi.com/support
For additional information, please contact your local Sales Representative at
www.onsemi.com/support/sales

Looking for pricing, stock, or lifecycle information?

Click below to explore more details on WIN SOURCE:

- View NVMFS5C406NT1G on WIN SOURCE
- ON Semiconductor Information

Optimize Your Supply Chain with WIN SOURCE Solutions

- Global Sourcing Solution
- Obsolete Management
- Cost Control Management
- Shortage Management
- Alternative Solution
- Excess Inventory Management