THE DATASHEET OF

JXD1-0001NL

www.win-source.net 0086-755-83957316

Pulse Electronics
www.pulseelectronics.com

0

ICRO–INCHS MIN

OMITTED SEE

AND REGULATION

SOLDERING
IS

5°C.
C.
1200 PCS/BOX.

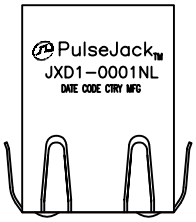

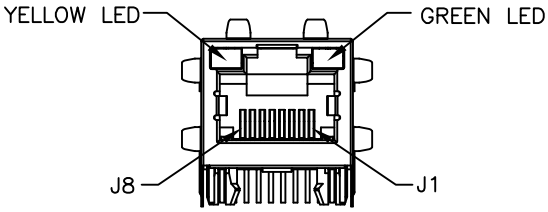

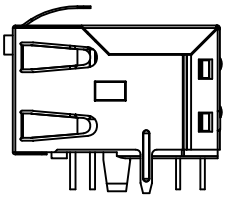

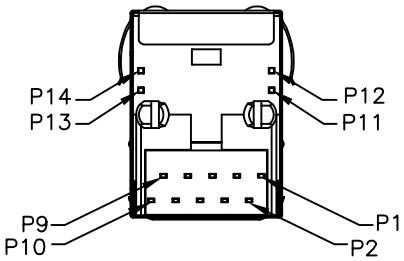

FINAL OUTLINE

All rights reserved. Pulse confidential & proprietary. (05/13/15)

TLA DRAWING	PS DRAWING	SHEET	PART NO.	DATASHEET REV.
XD1–0001NL–X1	–	1 OF 5	JXD1–0001NL	A

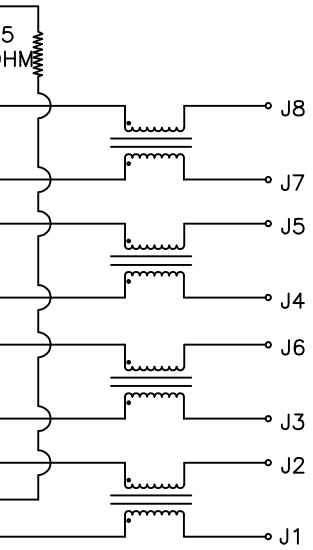

Electronical Specifications:

1.0 Turn Ratio @100KHz: (P9~P8):(J1~J2) = 1:1±5%
(P7~P6):(J3~J6) = 1:1±5%
(P5~P4):(J4~J5) = 1:1±5%
(P3~P2):(J7~J8) = 1:1±5%

2.0 Primary Inductance: 350uH MIN @100KHZ, 0.1V 8mA DC BIAS

3.0 DC Resistance: 1.2 OHMS MAX

4.0 Insertion Loss: 1–100MHz –1.0dB MAX
100–125MHz –1.2dB MAX

5.0 Return Loss: 1–40MHz –16dB MIN
40–60MHz –12dB MIN
60–80MHz –10dB MIN
80–100MHz –8dB MIN

6.0 CROSS TALK: 1–100MHz –30dB MIN

7.0 COMMON TO COMMON MODE ATTENUATION: 1–100MHz –30dB MIN

8.0 Isolation: PHY Side to Line Side: 2250VDC

LED SPECIFICATION

STANDARD LED	WAVELENGTH	Forward Current	Forward V(max)	TYP
GREEN	565nm	20 mA	2.4V	2.2V
YELLOW	590nm	20 mA	2.5V	2.1V

All rights reserved. Pulse confidential & proprietary. (05/13/15)

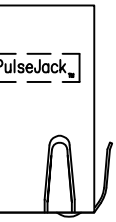

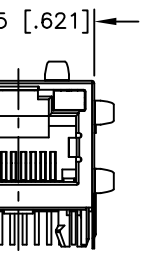

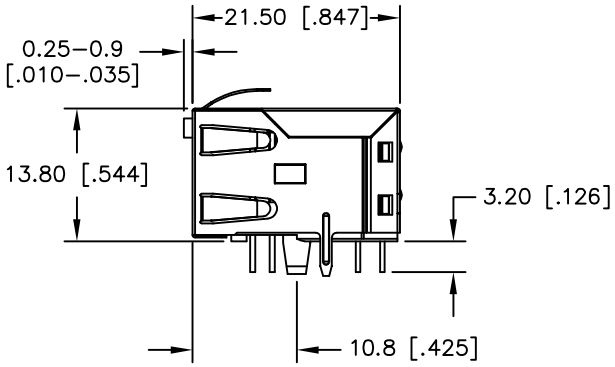

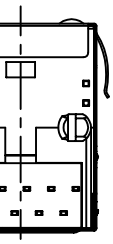

WITH THE FOLLOWING
NCE ONLY.

All rights reserved. Pulse confidential & proprietary. (05/13/15)

TLA DRAWING	PS DRAWING	SHEET	PART NO.	DATASHEET REV.
XD1–0001NL–X1	–	3 OF 5	JXD1–0001NL	A

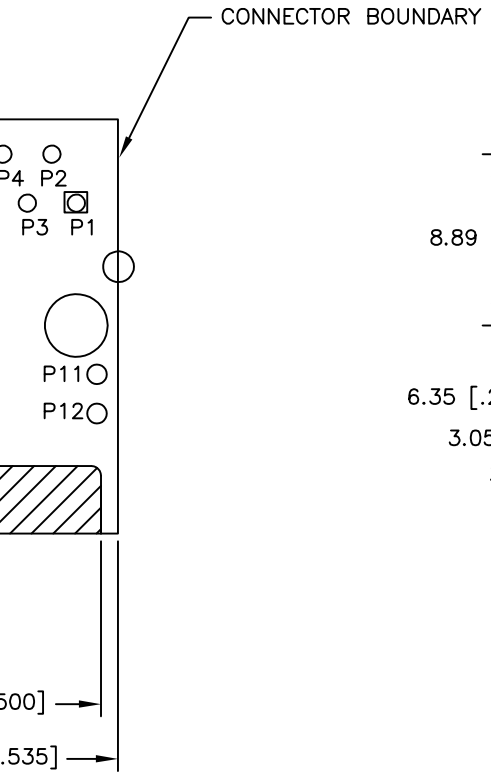

PONENT SIDE SHOWN)

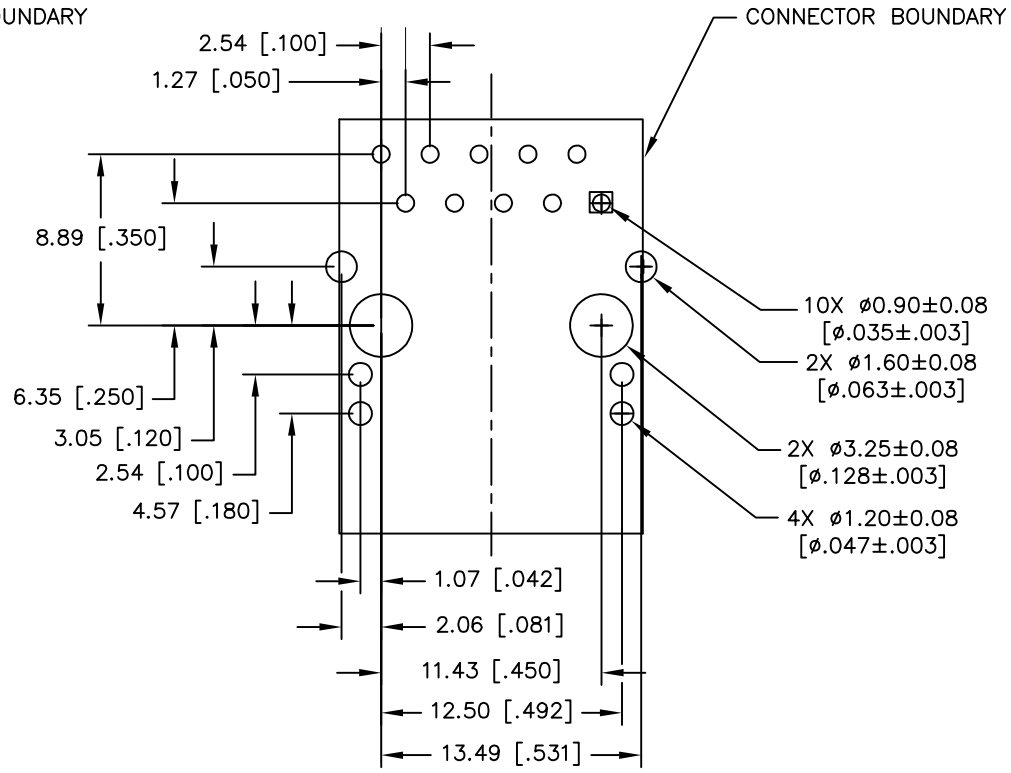

RECOMMENDED PWB LAYOUT
(COMPONENT SIDE SHOWN)

WITH THE FOLLOWING
NCE ONLY.

All rights reserved. Pulse confidential & proprietary. (05/13/15)

TLA DRAWING	PS DRAWING	SHEET	PART NO.	DATASHEET REV.
XD1–0001NL–X1	–	4 OF 5	JXD1–0001NL	A

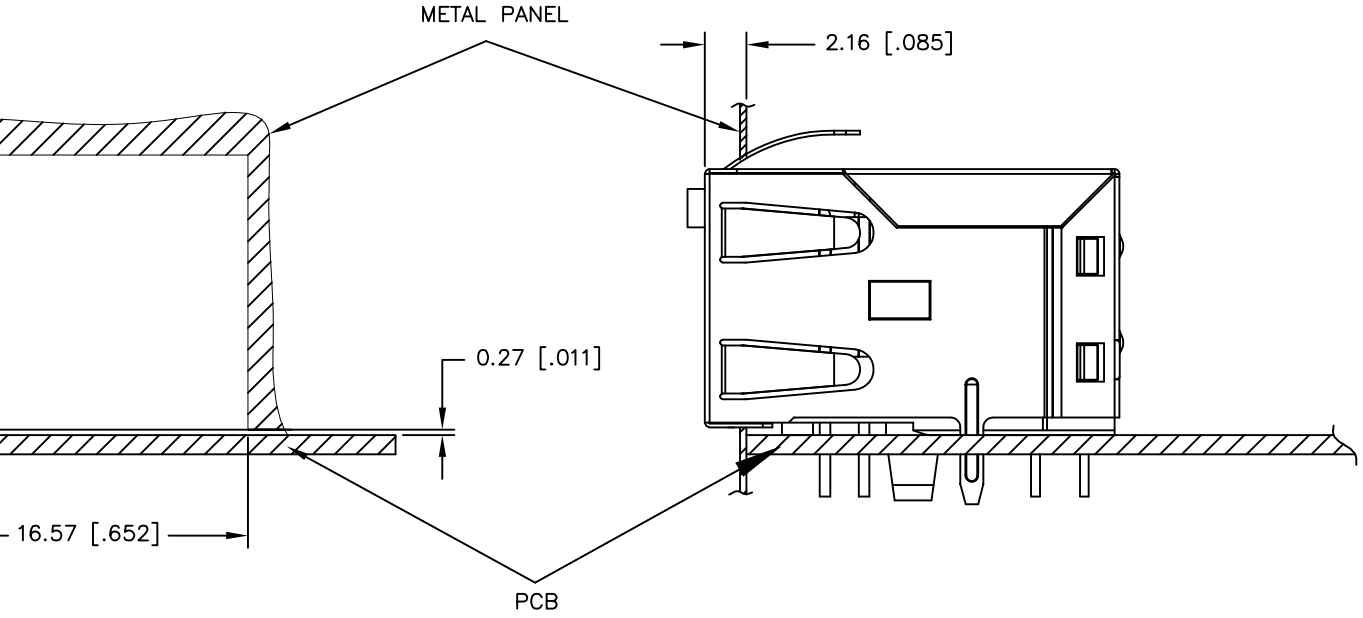

SUGGESTED PANEL CUTOUT

WITH THE FOLLOWING
NCE ONLY.

All rights reserved. Pulse confidential & proprietary. (05/13/15)

TLA DRAWING	PS DRAWING	SHEET	PART NO.	DATASHEET REV.
XD1–0001NL–X1	–	5 OF 5	JXD1–0001NL	A

Looking for pricing, stock, or lifecycle information?

Click below to explore more details on WIN SOURCE:

- View JXD1-0001NL on WIN SOURCE
- Pulse Information

Optimize Your Supply Chain with WIN SOURCE Solutions

- Global Sourcing Solution
- Obsolete Management
- Cost Control Management
- Shortage Management
- Alternative Solution
- Excess Inventory Management