THE DATASHEET OF

CD40147BPWR

www.win-source.net 0086-755-83957316

TEXAS INSTRUMENTS
Data sheet acquired from Harris Semiconductor
SCHS102C – Revised October 2003

CD40147B Types

10-Line to 4-Line BCD Priority Encoder

High-Voltage Types (20-Volt Rating)

The CD40147B CMOS encoder features priority encoding of the inputs to ensure that only the highest-order data line is encoded. Ten data input lines (0-9) are encoded to four-line (8, 4, 2, 1) BCD. The highest priority line is line 9. All four output lines are logic 1 (V_{SS}) when all input lines are logic 0. All inputs and outputs are buffered, and each output can drive one TTL low-power Schottky load. The CD40147B is functionally similar to the TTL54/74147 if pin 15 is tied low.

The CD40147B types are supplied in 16-lead dual-in-line plastic packages (E suffix), 16-lead small-outline packages (M, M96, MT, and NSR suffixes), and 16-lead thin shrink small-outline packages (PW and PWR suffixes).

Features:

- Encodes 10-line to 4-line BCD
- Active low inputs and outputs
- Standardized, symmetrical output characteristics
- 100% tested for quiescent current at 20 V
- 5-V, 10-V, and 15-V parametric ratings
- Meets all requirements of JEDEC Tentative Standard No. 13A, "Standard Specifications for Description of 'B' Series CMOS Devices"
- Maximum input current of 1 μA at 18 V over full package-temperature range; 100 nA at 18 V and 25°C
- Noise margin (full package-temperature range) = 1 V at V_{DD} = 5 V; 2 V at V_{DD} = 10 V; 2.5 V at V_{DD} = 15 V

Applications:

- Keyboard encoding
- 10-line to BCD encoding
- Range selection

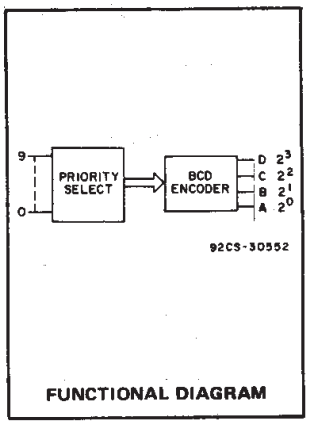

FUNCTIONAL DIAGRAM

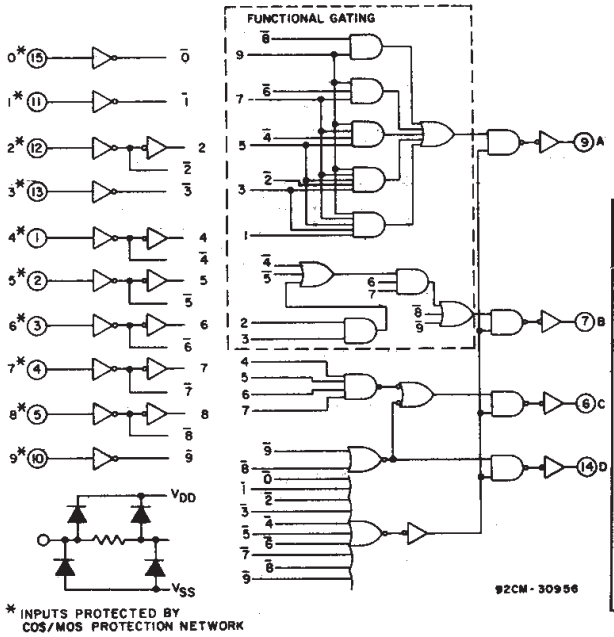

Fig. 1 – CD40147B logic diagram.

RECOMMENDED OPERATING CONDITIONS

For maximum reliability, nominal operating conditions should be selected so that operation is always within the following range:

CHARACTERISTIC	LIMITS		UNITS
	Min.	Max.	
Supply Voltage Range (For T_A = Full Package Temperature Range)	3	18	V

TRUTH TABLE (Negative Logic)

INPUTS										OUTPUTS			
0	1	2	3	4	5	6	7	8	9	D	C	B	A
0	0	0	0	0	0	0	0	0	0	1	1	1	1
1	0	0	0	0	0	0	0	0	0	0	0	0	0
X	1	0	0	0	0	0	0	0	0	0	0	0	1
X	X	1	0	0	0	0	0	0	0	0	0	1	0
X	X	X	1	0	0	0	0	0	0	0	0	1	1
X	X	X	X	1	0	0	0	0	0	0	1	0	0
X	X	X	X	X	1	0	0	0	0	0	1	0	1
X	X	X	X	X	X	1	0	0	0	0	1	1	0
X	X	X	X	X	X	X	1	0	0	0	1	1	1
X	X	X	X	X	X	X	X	1	0	1	0	0	0
X	X	X	X	X	X	X	X	X	1	1	0	0	1

0 = High Level 1 = Low Level X = Don't Care

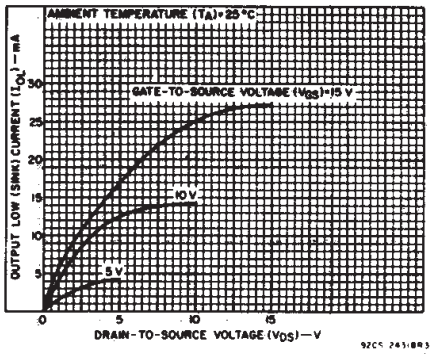

Fig. 2 – Typical output low (sink) current characteristics.

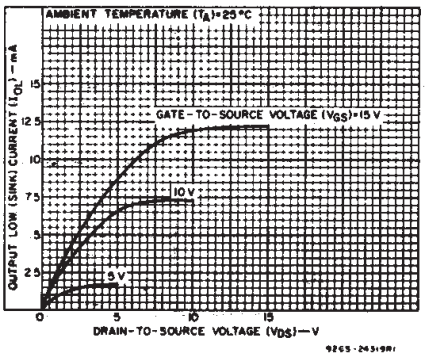

Fig. 3 – Minimum output low (sink) current characteristics.

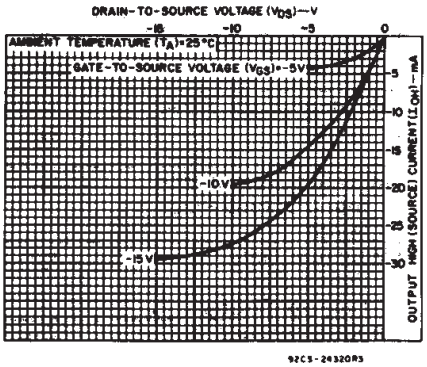

Fig. 4 – Typical output high (source) current characteristics.

Copyright © 2003, Texas Instruments Incorporated

MAXIMUM RATINGS, *Absolute-Maximum Values:*

DC SUPPLY-VOLTAGE RANGE, (V_{DD})
Voltages referenced to V_{SS} Terminal) ..... -0.5V to +20V
INPUT VOLTAGE RANGE, ALL INPUTS ..... -0.5V to V_{DD} +0.5V
DC INPUT CURRENT, ANY ONE INPUT ..... ±10mA
POWER DISSIPATION PER PACKAGE (P_D):
For T_A = -55°C to +100°C 500mW
For T_A = +100°C to +125°C ..... Derate Linearity at 12mW/°C to 200mW
DEVICE DISSIPATION PER OUTPUT TRANSISTOR
FOR T_A = FULL PACKAGE-TEMPERATURE RANGE (All Package Types) 100mW
OPERATING-TEMPERATURE RANGE (T_A) ..... -55°C to +125°C
STORAGE TEMPERATURE RANGE (T_{stg}) ..... -65°C to +150°C
LEAD TEMPERATURE (DURING SOLDERING):
At distance 1/16 ± 1/32 inch (1.59 ± 0.79mm) from case for 10s max ..... +265°C

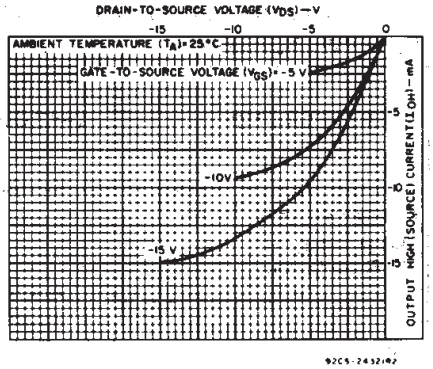

Fig. 5 — Minimum output high (source) current characteristics.

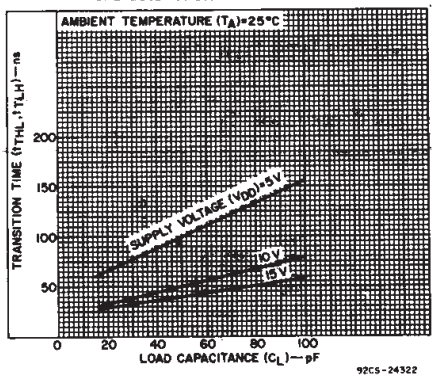

Fig. 6 — Typical transition time as a function of load capacitance.

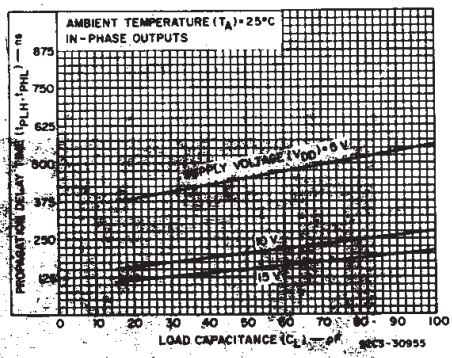

Fig. 7 — Propagation delay time as a function of load capacitance.

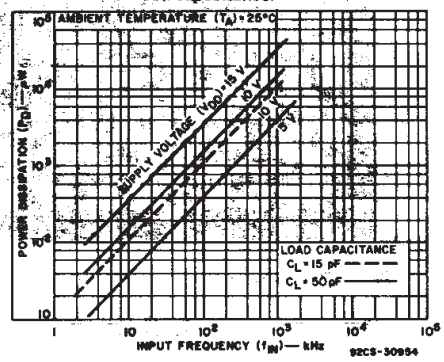

Fig. 8 — Typical dynamic power dissipation as a function of input frequency.

STATIC ELECTRICAL CHARACTERISTICS

CHARACTERISTIC	CONDITIONS			LIMITS AT INDICATED TEMPERATURES (°C)							UNITS
	V_O (V)	V_{IN} (V)	V_{DD} (V)	-55	-40	+85	+125	+25 Min.	+25 Typ.	+25 Max.	
Quiescent	—	0,5	5	5	5	150	150	—	0.04	5	μA
Device	—	0,10	10	10	10	300	300	—	0.04	10	μA
Current, I_{DD}	—	0,15	15	20	20	600	600	—	0.04	20	μA
Max.	—	0,20	20	100	100	3000	3000	—	0.08	100	μA
Output Low (Sink) Current	0.4	0,5	5	0.64	0.61	0.42	0.36	0.51	1	—	mA
	0.5	0,10	10	1.6	1.5	1.1	0.9	1.3	2.6	—	mA
I_{OL} Min.	1.5	0,15	15	4.2	4	2.8	2.4	3.4	6.8	—	mA
Output	4.6	0,5	5	-0.64	-0.61	-0.42	-0.36	-0.51	-1	—	mA
(Source)	2.5	0,5	5	-2	-1.8	-1.3	-1.15	-1.6	-3.2	—	mA
Current,	9.5	0,10	10	-1.6	-1.5	-1.1	-0.9	-1.3	-2.6		mA
I_{OH} Min.	13.5	0,15	15	-4.2	-4	-2.8	-2.4	-3.4	-6.8		mA
Output Voltage:	—	0,5	5	0.05				—	0	0.05	V
Low-Level,	—	0,10	10	0.05				—	0	0.05	V
V_{OL} Max.	—	0,15	15	0.05				—	0	0.05	V
Output Voltage:	—	0,5	5	4.95				4.95	5	—	V
High-Level,	—	0,10	10	9.95				9.95	10	—	V
V_{OH} Min.	—	0,15	15	14.95				14.95	15	—	V
Input Low	0.5,4.5	—	5	1.5				—	—	1.5	V
Voltage,	1,9	—	10	3				—	—	3	V
V_{IL} Max.	1.5,13.5	—	15	4				—	—	4	V
Input High	0.5,4.5	—	5	3.5				3.5	—	—	V
Voltage,	1,9	—	10	7				7	—	—	V
V_{IH} Min.	1.5,13.5	—	15	11				11	—	—	V
Input Current I_{IN} Max.	—	0,18	18	±0.1	±0.1	±1	±1	—	$\pm 10^{-5}$	±0.1	μA

DYNAMIC ELECTRICAL CHARACTERISTICS at T_A = 25°C, Input t_r, t_f = 20 ns, C_L = 50 pF, R_L = 200 kΩ

CHARACTERISTIC	TEST CONDITIONS	V_{DD} (V)	LIMITS ALL TYPES Typ.	LIMITS ALL TYPES Max.	UNITS
Propagation Delay Time, t_{PLH}, t_{PHL} In-Phase Output	Any input to any output	5	450	900	ns
		10	200	400	
		15	150	300	
Out-of-Phase Output		5	425	850	ns
		10	175	350	
		15	125	250	
Transition Time, t_{THL}, t_{TLH}		5	100	200	ns
		10	50	100	
		15	40	80	
Input Capacitance, C_1	Any Input		5	7.5	pF

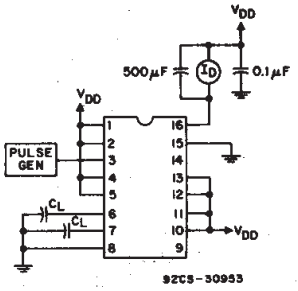

Fig. 9 – Dynamic power dissipation test circuit.

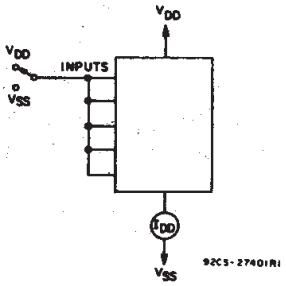

Fig. 10 – Quiescent device current test circuit.

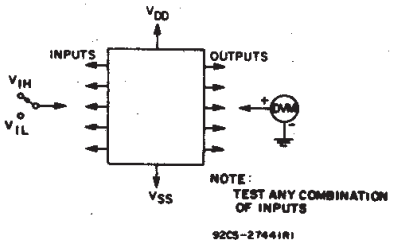

Fig. 11 – Input voltage test circuit.

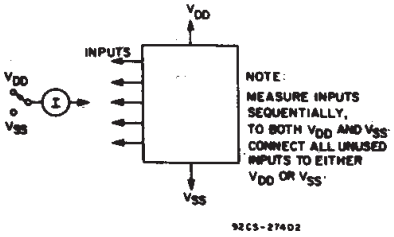

Fig. 12 – Input current test circuit.

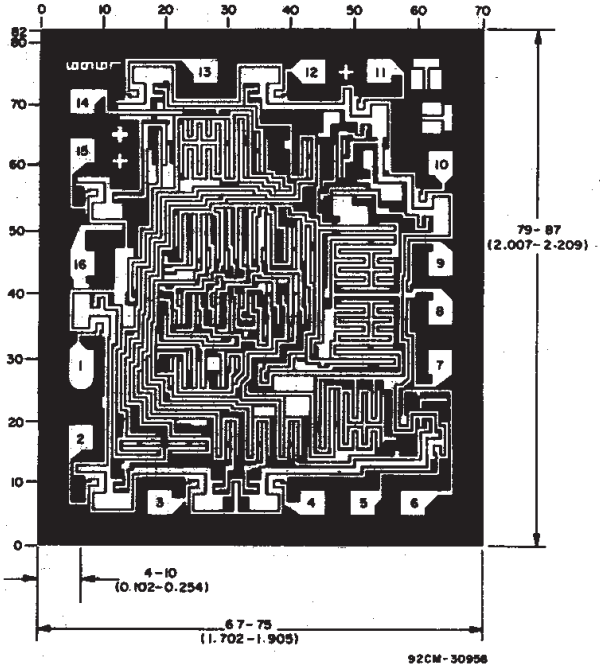

Dimensions and pad layout for CD40147BH

Dimensions in parentheses are in millimeters and are derived from the basic inch dimensions as indicated. Grid graduations are in mils (10^{-3} inch).

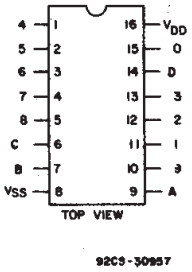

CD40147B TERMINAL ASSIGNMENT

PACKAGING INFORMATION

Orderable Device	Status (1)	Package Type	Package Drawing	Pins	Package Qty	Eco Plan (2)	Lead/Ball Finish (6)	MSL Peak Temp (3)	Op Temp (°C)	Device Marking (4/5)	Samples
CD40147BE	ACTIVE	PDIP	N	16	25	Green (RoHS & no Sb/Br)	CU NIPDAU	N / A for Pkg Type	-55 to 125	CD40147BE	Samples
CD40147BEE4	ACTIVE	PDIP	N	16	25	Green (RoHS & no Sb/Br)	CU NIPDAU	N / A for Pkg Type	-55 to 125	CD40147BE	Samples
CD40147BM	ACTIVE	SOIC	D	16	40	Green (RoHS & no Sb/Br)	CU NIPDAU	Level-1-260C-UNLIM	-55 to 125	CD40147BM	Samples

(1) The marketing status values are defined as follows:
ACTIVE: Product device recommended for new designs.
LIFEBUY: TI has announced that the device will be discontinued, and a lifetime-buy period is in effect.
NRND: Not recommended for new designs. Device is in production to support existing customers, but TI does not recommend using this part in a new design.
PREVIEW: Device has been announced but is not in production. Samples may or may not be available.
OBSOLETE: TI has discontinued the production of the device.

(2) **RoHS:** TI defines "RoHS" to mean semiconductor products that are compliant with the current EU RoHS requirements for all 10 RoHS substances, including the requirement that RoHS substance do not exceed 0.1% by weight in homogeneous materials. Where designed to be soldered at high temperatures, "RoHS" products are suitable for use in specified lead-free processes. TI may reference these types of products as "Pb-Free".
RoHS Exempt: TI defines "RoHS Exempt" to mean products that contain lead but are compliant with EU RoHS pursuant to a specific EU RoHS exemption.
Green: TI defines "Green" to mean the content of Chlorine (Cl) and Bromine (Br) based flame retardants meet JS709B low halogen requirements of <=1000ppm threshold. Antimony trioxide based flame retardants must also meet the <=1000ppm threshold requirement.

(3) MSL, Peak Temp. - The Moisture Sensitivity Level rating according to the JEDEC industry standard classifications, and peak solder temperature.

(4) There may be additional marking, which relates to the logo, the lot trace code information, or the environmental category on the device.

(5) Multiple Device Markings will be inside parentheses. Only one Device Marking contained in parentheses and separated by a "~" will appear on a device. If a line is indented then it is a continuation of the previous line and the two combined represent the entire Device Marking for that device.

(6) Lead/Ball Finish - Orderable Devices may have multiple material finish options. Finish options are separated by a vertical ruled line. Lead/Ball Finish values may wrap to two lines if the finish value exceeds the maximum column width.

Important Information and Disclaimer: The information provided on this page represents TI's knowledge and belief as of the date that it is provided. TI bases its knowledge and belief on information provided by third parties, and makes no representation or warranty as to the accuracy of such information. Efforts are underway to better integrate information from third parties. TI has taken and continues to take reasonable steps to provide representative and accurate information but may not have conducted destructive testing or chemical analysis on incoming materials and chemicals. TI and TI suppliers consider certain information to be proprietary, and thus CAS numbers and other limited information may not be available for release.

In no event shall TI's liability arising out of such information exceed the total purchase price of the TI part(s) at issue in this document sold by TI to Customer on an annual basis.

D (R–PDSO–G16) PLASTIC SMALL OUTLINE

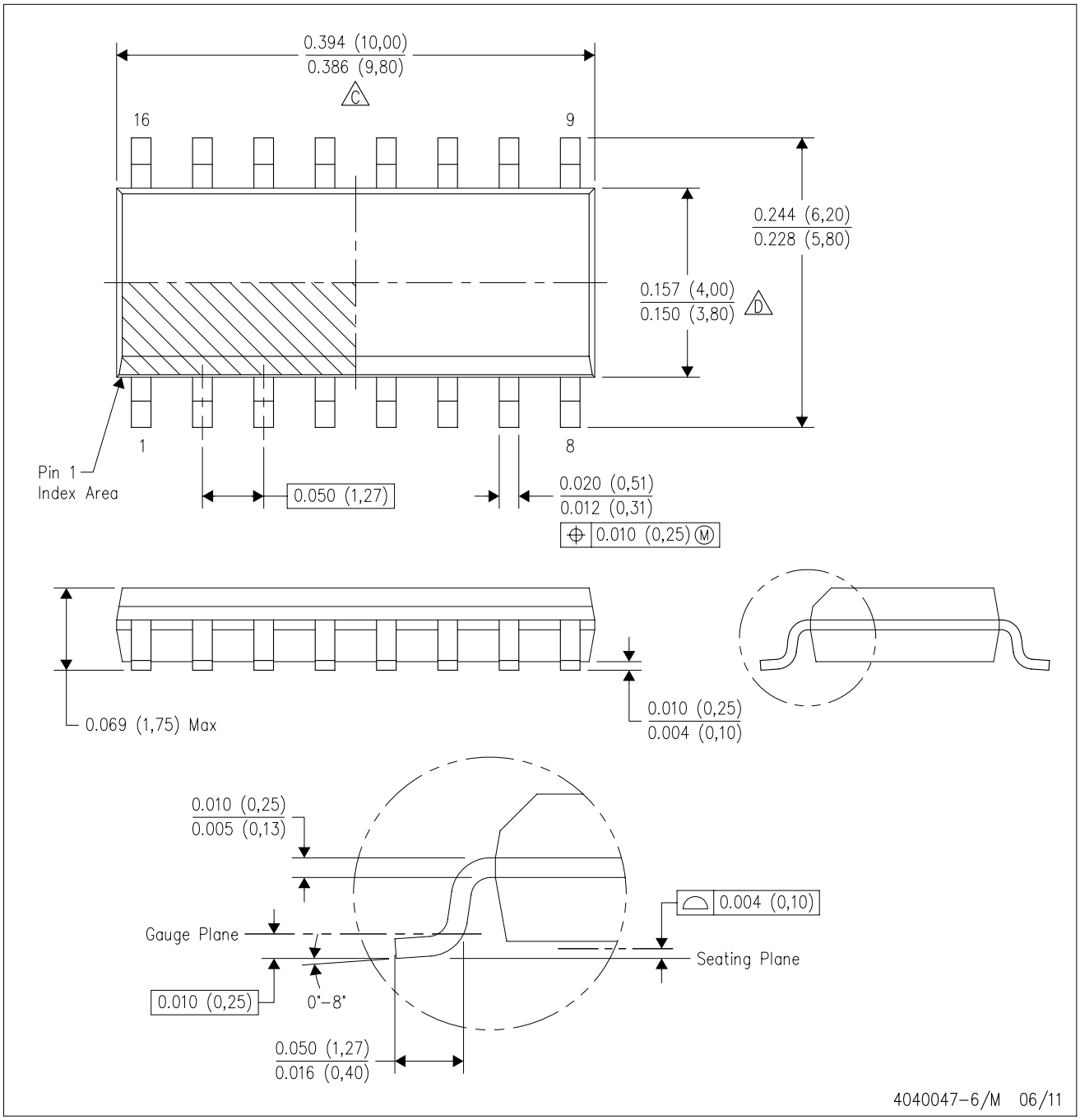

NOTES:
A. All linear dimensions are in inches (millimeters).
B. This drawing is subject to change without notice.
C. Body length does not include mold flash, protrusions, or gate burrs. Mold flash, protrusions, or gate burrs shall not exceed 0.006 (0,15) each side.
D. Body width does not include interlead flash. Interlead flash shall not exceed 0.017 (0,43) each side.
E. Reference JEDEC MS–012 variation AC.

D (R–PDSO–G16) PLASTIC SMALL OUTLINE

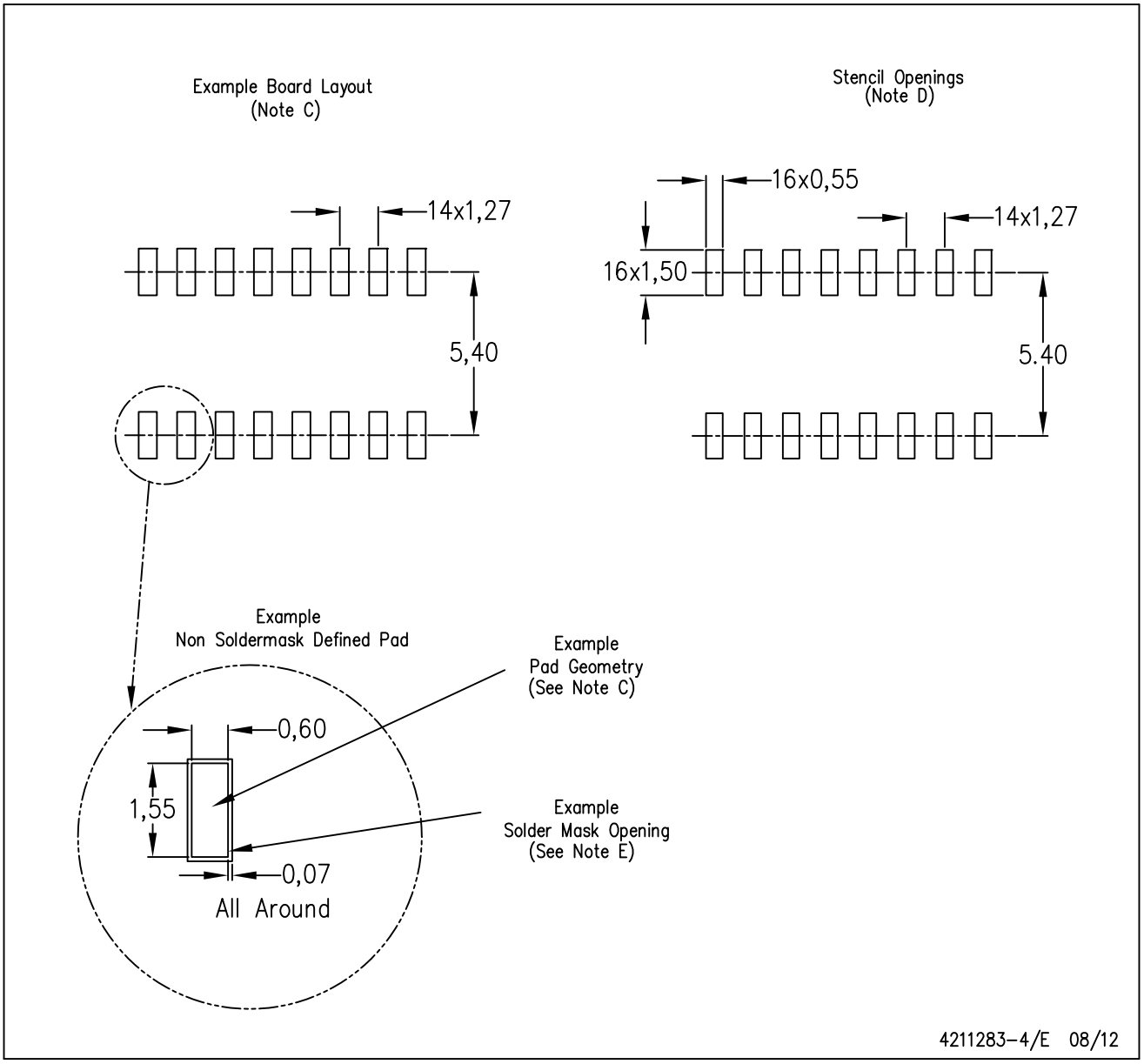

NOTES:
A. All linear dimensions are in millimeters.
B. This drawing is subject to change without notice.
C. Publication IPC–7351 is recommended for alternate designs.
D. Laser cutting apertures with trapezoidal walls and also rounding corners will offer better paste release. Customers should contact their board assembly site for stencil design recommendations. Refer to IPC–7525 for other stencil recommendations.
E. Customers should contact their board fabrication site for solder mask tolerances between and around signal pads.

N (R–PDIP–T**) PLASTIC DUAL–IN–LINE PACKAGE

16 PINS SHOWN

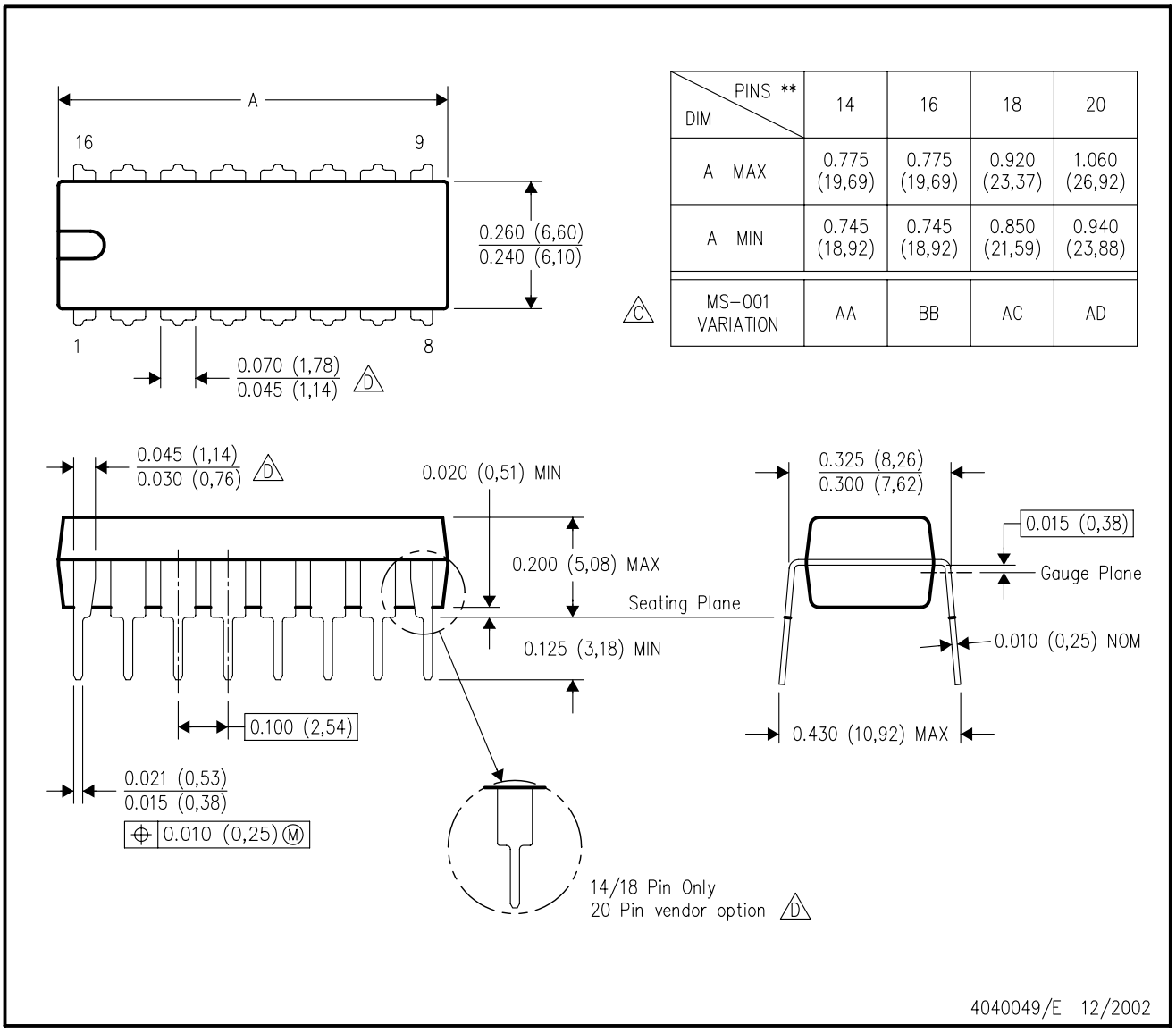

DIM \ PINS **	14	16	18	20
A MAX	0.775 (19,69)	0.775 (19,69)	0.920 (23,37)	1.060 (26,92)
A MIN	0.745 (18,92)	0.745 (18,92)	0.850 (21,59)	0.940 (23,88)
MS–001 VARIATION (C)	AA	BB	AC	AD

NOTES:
A. All linear dimensions are in inches (millimeters).
B. This drawing is subject to change without notice.
C. Falls within JEDEC MS–001, except 18 and 20 pin minimum body length (Dim A).
D. The 20 pin end lead shoulder width is a vendor option, either half or full width.

IMPORTANT NOTICE

Texas Instruments Incorporated (TI) reserves the right to make corrections, enhancements, improvements and other changes to its semiconductor products and services per JESD46, latest issue, and to discontinue any product or service per JESD48, latest issue. Buyers should obtain the latest relevant information before placing orders and should verify that such information is current and complete.

TI's published terms of sale for semiconductor products (http://www.ti.com/sc/docs/stdterms.htm) apply to the sale of packaged integrated circuit products that TI has qualified and released to market. Additional terms may apply to the use or sale of other types of TI products and services.

Reproduction of significant portions of TI information in TI data sheets is permissible only if reproduction is without alteration and is accompanied by all associated warranties, conditions, limitations, and notices. TI is not responsible or liable for such reproduced documentation. Information of third parties may be subject to additional restrictions. Resale of TI products or services with statements different from or beyond the parameters stated by TI for that product or service voids all express and any implied warranties for the associated TI product or service and is an unfair and deceptive business practice. TI is not responsible or liable for any such statements.

Buyers and others who are developing systems that incorporate TI products (collectively, "Designers") understand and agree that Designers remain responsible for using their independent analysis, evaluation and judgment in designing their applications and that Designers have full and exclusive responsibility to assure the safety of Designers' applications and compliance of their applications (and of all TI products used in or for Designers' applications) with all applicable regulations, laws and other applicable requirements. Designer represents that, with respect to their applications, Designer has all the necessary expertise to create and implement safeguards that (1) anticipate dangerous consequences of failures, (2) monitor failures and their consequences, and (3) lessen the likelihood of failures that might cause harm and take appropriate actions. Designer agrees that prior to using or distributing any applications that include TI products, Designer will thoroughly test such applications and the functionality of such TI products as used in such applications.

TI's provision of technical, application or other design advice, quality characterization, reliability data or other services or information, including, but not limited to, reference designs and materials relating to evaluation modules, (collectively, "TI Resources") are intended to assist designers who are developing applications that incorporate TI products; by downloading, accessing or using TI Resources in any way, Designer (individually or, if Designer is acting on behalf of a company, Designer's company) agrees to use any particular TI Resource solely for this purpose and subject to the terms of this Notice.

TI's provision of TI Resources does not expand or otherwise alter TI's applicable published warranties or warranty disclaimers for TI products, and no additional obligations or liabilities arise from TI providing such TI Resources. TI reserves the right to make corrections, enhancements, improvements and other changes to its TI Resources. TI has not conducted any testing other than that specifically described in the published documentation for a particular TI Resource.

Designer is authorized to use, copy and modify any individual TI Resource only in connection with the development of applications that include the TI product(s) identified in such TI Resource. NO OTHER LICENSE, EXPRESS OR IMPLIED, BY ESTOPPEL OR OTHERWISE TO ANY OTHER TI INTELLECTUAL PROPERTY RIGHT, AND NO LICENSE TO ANY TECHNOLOGY OR INTELLECTUAL PROPERTY RIGHT OF TI OR ANY THIRD PARTY IS GRANTED HEREIN, including but not limited to any patent right, copyright, mask work right, or other intellectual property right relating to any combination, machine, or process in which TI products or services are used. Information regarding or referencing third-party products or services does not constitute a license to use such products or services, or a warranty or endorsement thereof. Use of TI Resources may require a license from a third party under the patents or other intellectual property of the third party, or a license from TI under the patents or other intellectual property of TI.

TI RESOURCES ARE PROVIDED "AS IS" AND WITH ALL FAULTS. TI DISCLAIMS ALL OTHER WARRANTIES OR REPRESENTATIONS, EXPRESS OR IMPLIED, REGARDING RESOURCES OR USE THEREOF, INCLUDING BUT NOT LIMITED TO ACCURACY OR COMPLETENESS, TITLE, ANY EPIDEMIC FAILURE WARRANTY AND ANY IMPLIED WARRANTIES OF MERCHANTABILITY, FITNESS FOR A PARTICULAR PURPOSE, AND NON-INFRINGEMENT OF ANY THIRD PARTY INTELLECTUAL PROPERTY RIGHTS. TI SHALL NOT BE LIABLE FOR AND SHALL NOT DEFEND OR INDEMNIFY DESIGNER AGAINST ANY CLAIM, INCLUDING BUT NOT LIMITED TO ANY INFRINGEMENT CLAIM THAT RELATES TO OR IS BASED ON ANY COMBINATION OF PRODUCTS EVEN IF DESCRIBED IN TI RESOURCES OR OTHERWISE. IN NO EVENT SHALL TI BE LIABLE FOR ANY ACTUAL, DIRECT, SPECIAL, COLLATERAL, INDIRECT, PUNITIVE, INCIDENTAL, CONSEQUENTIAL OR EXEMPLARY DAMAGES IN CONNECTION WITH OR ARISING OUT OF TI RESOURCES OR USE THEREOF, AND REGARDLESS OF WHETHER TI HAS BEEN ADVISED OF THE POSSIBILITY OF SUCH DAMAGES.

Unless TI has explicitly designated an individual product as meeting the requirements of a particular industry standard (e.g., ISO/TS 16949 and ISO 26262), TI is not responsible for any failure to meet such industry standard requirements.

Where TI specifically promotes products as facilitating functional safety or as compliant with industry functional safety standards, such products are intended to help enable customers to design and create their own applications that meet applicable functional safety standards and requirements. Using products in an application does not by itself establish any safety features in the application. Designers must ensure compliance with safety-related requirements and standards applicable to their applications. Designer may not use any TI products in life-critical medical equipment unless authorized officers of the parties have executed a special contract specifically governing such use. Life-critical medical equipment is medical equipment where failure of such equipment would cause serious bodily injury or death (e.g., life support, pacemakers, defibrillators, heart pumps, neurostimulators, and implantables). Such equipment includes, without limitation, all medical devices identified by the U.S. Food and Drug Administration as Class III devices and equivalent classifications outside the U.S.

TI may expressly designate certain products as completing a particular qualification (e.g., Q100, Military Grade, or Enhanced Product). Designers agree that it has the necessary expertise to select the product with the appropriate qualification designation for their applications and that proper product selection is at Designers' own risk. Designers are solely responsible for compliance with all legal and regulatory requirements in connection with such selection.

Designer will fully indemnify TI and its representatives against any damages, costs, losses, and/or liabilities arising out of Designer's non-compliance with the terms and provisions of this Notice.

Mailing Address: Texas Instruments, Post Office Box 655303, Dallas, Texas 75265
Copyright © 2018, Texas Instruments Incorporated

Looking for pricing, stock, or lifecycle information?

Click below to explore more details on WIN SOURCE:

- View CD40147BPWR on WIN SOURCE
- Texas Instruments Information

Optimize Your Supply Chain with WIN SOURCE Solutions

- Global Sourcing Solution
- Obsolete Management
- Cost Control Management
- Shortage Management
- Alternative Solution
- Excess Inventory Management