THE DATASHEET OF

RMLV0816BGSA-4S2#AA0

www.win-source.net 0086-755-83957316

RMLV0816BGSA - 4S2

8Mb Advanced LPSRAM (512k word × 16bit / 1024k word x 8bit)

R10DS0252EJ0201
Rev.2.01
2020.02.20

Description

The RMLV0816BGSA is a family of 8-Mbit static RAMs organized 524,288-word × 16-bit, fabricated by Renesas's high-performance Advanced LPSRAM technologies. The RMLV0816BGSA has realized higher density, higher performance and low power consumption. The RMLV0816BGSA offers low power standby power dissipation; therefore, it is suitable for battery backup systems. It is offered in 48pin TSOP (I).

Features

- Single 3V supply: 2.4V to 3.6V
- Access time:
  — Power supply voltage from 2.7V to 3.6V: 45ns (max.)
  — Power supply voltage from 2.4V to 2.7V: 55ns (max.)
- Current consumption:
  — Standby: 0.45µA (typ.)
- Equal access and cycle times
- Common data input and output
  — Three state output
- Directly TTL compatible
  — All inputs and outputs
- Battery backup operation

Part Name Information

Part Name	Power supply	Access time	Temperature Range	Package
RMLV0816BGSA-4S2	2.7V to 3.6V	45 ns	-40 ~ +85°C	12mm x 20mm 48pin plastic TSOP (I)
	2.4V to 2.7V	55 ns		

Pin Arrangement

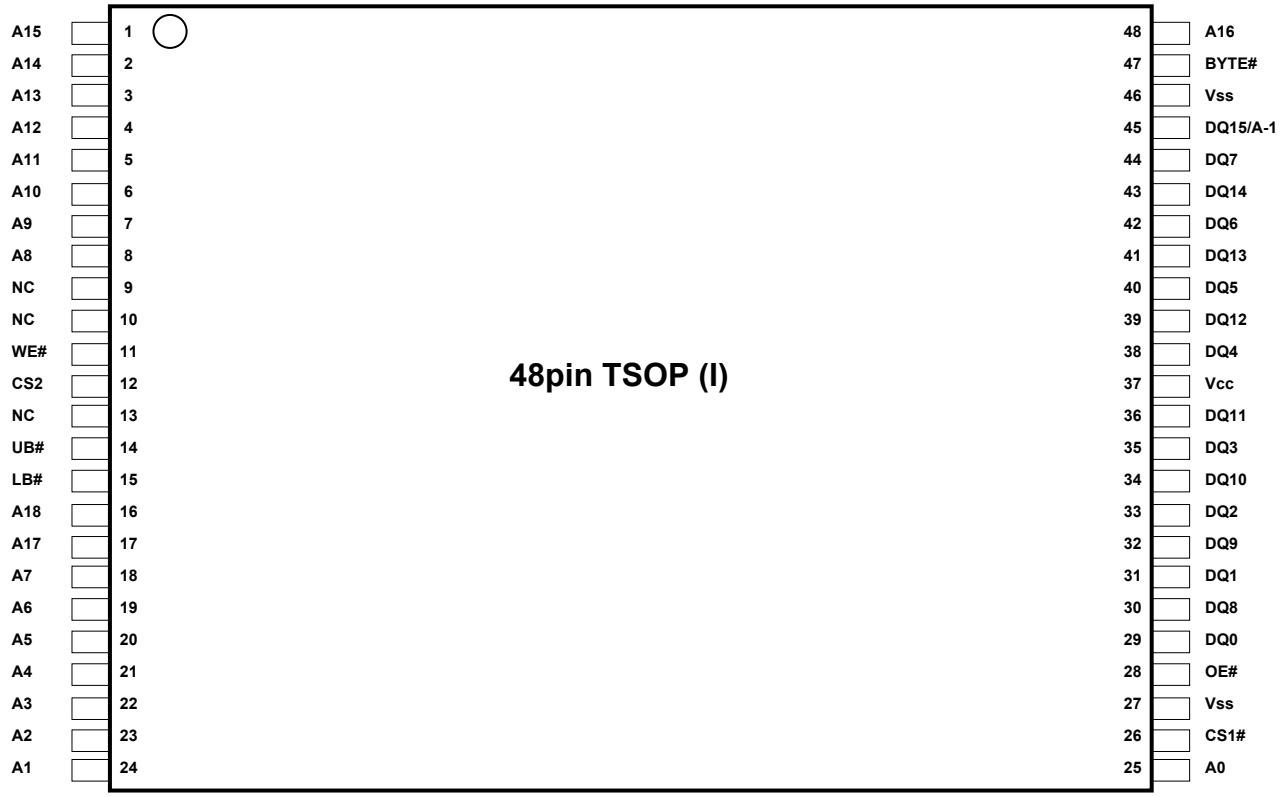

Pin Description

Pin name	Function
V_{CC}	Power supply
V_{SS}	Ground
A0 to A18	Address input (word mode)
A-1 to A18	Address input (byte mode)
DQ0 to DQ15	Data input/output
CS1#	Chip select 1
CS2	Chip select 2
OE#	Output enable
WE#	Write enable
LB#	Lower byte select
UB#	Upper byte select
BYTE#	Byte control mode enable
NC	No connection

Block Diagram

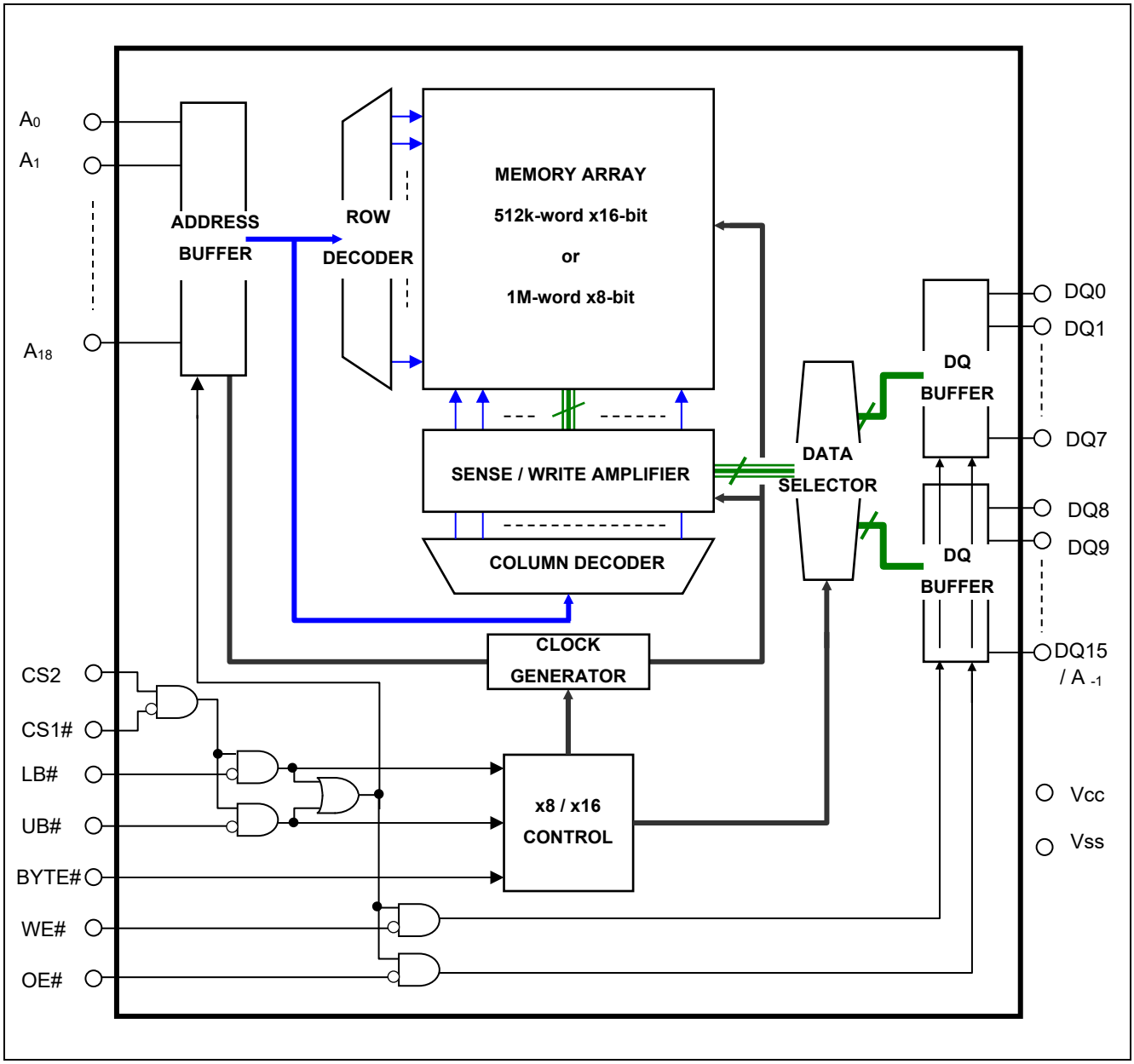

Operation Table

CS1#	CS2	BYTE#	UB#	LB#	WE#	OE#	DQ0~7	DQ8~14	DQ15	Operation
H	X	X	X	X	X	X	High-Z	High-Z	High-Z	Stand-by
X	L	X	X	X	X	X	High-Z	High-Z	High-Z	Stand-by
X	X	H	H	H	X	X	High-Z	High-Z	High-Z	Stand-by
L	H	H	H	L	L	X	Din	High-Z	High-Z	Write in lower byte
L	H	H	H	L	H	L	Dout	High-Z	High-Z	Read in lower byte
L	H	H	H	L	H	H	High-Z	High-Z	High-Z	Output disable
L	H	H	L	H	L	X	High-Z	Din	Din	Write in upper byte
L	H	H	L	H	H	L	High-Z	Dout	Dout	Read in upper byte
L	H	H	L	H	H	H	High-Z	High-Z	High-Z	Output disable
L	H	H	L	L	L	X	Din	Din	Din	Word write
L	H	H	L	L	H	L	Dout	Dout	Dout	Word read
L	H	H	L	L	H	H	High-Z	High-Z	High-Z	Output disable
L	H	L	X	X	L	X	Din	High-Z	A-1	Byte write
L	H	L	X	X	H	L	Dout	High-Z	A-1	Byte read
L	H	L	X	X	H	H	High-Z	High-Z	A-1	Output disable

Note 1. H: V_{IH} L:V_{IL} X: V_{IH} or V_{IL}

Absolute Maximum Ratings

Parameter	Symbol	Value	unit
Power supply voltage relative to V_{SS}	V_{CC}	-0.5 to +4.6	V
Terminal voltage on any pin relative to V_{SS}	V_T	-0.5[*2] to V_{CC}+0.3[*3]	V
Power dissipation	P_T	0.7	W
Operation temperature	Topr	-40 to +85	°C
Storage temperature range	Tstg	-65 to +150	°C
Storage temperature range under bias	Tbias	-40 to +85	°C

Note 2. -3.0V for pulse ≤ 30ns (full width at half maximum)
3. Maximum voltage is +4.6V.

DC Operating Conditions

Parameter	Symbol	Min.	Typ.	Max.	Unit	Test conditions	Note
Supply voltage	V_{CC}	2.4	3.0	3.6	V		
	V_{SS}	0	0	0	V		
Input high voltage	V_{IH}	2.0	—	V_{CC}+0.2	V	Vcc=2.4V to 2.7V	
		2.2	—	V_{CC}+0.2	V	Vcc=2.7V to 3.6V	
Input low voltage	V_{IL}	-0.2	—	0.4	V	Vcc=2.4V to 2.7V	4
		-0.2	—	0.6	V	Vcc=2.7V to 3.6V	4
Ambient temperature range	Ta	-40	—	+85	°C		

Note 4. -3.0V for pulse ≤ 30ns (full width at half maximum)

DC Characteristics

Parameter	Symbol	Min.	Typ.	Max.	Unit	Test conditions
Input leakage current	$\lvert I_{LI} \rvert$	—	—	1	μA	Vin = V_{SS} to V_{CC}
Output leakage current	$\lvert I_{LO} \rvert$	—	—	1	μA	BYTE# ≥ Vcc -0.2V or BYTE# ≤ 0.2V CS1# = V_{IH} or CS2 = V_{IL} or OE# = V_{IH} or WE# = V_{IL} or LB# = UB# = V_{IH}, $V_{I/O}$ = V_{SS} to V_{CC}
Average operating current	I_{CC1}	—	20[*5]	25	mA	Cycle = 55ns, duty =100%, $I_{I/O}$ = 0mA, BYTE# ≥ Vcc -0.2V or BYTE# ≤ 0.2V CS1# = V_{IL}, CS2 = V_{IH}, Others = V_{IH}/V_{IL}
		—	25[*5]	30	mA	Cycle = 45ns, duty =100%, $I_{I/O}$ = 0mA, BYTE# ≥ Vcc -0.2V or BYTE# ≤ 0.2V CS1# = V_{IL}, CS2 = V_{IH}, Others = V_{IH}/V_{IL}
	I_{CC2}	—	1.5[*5]	3	mA	Cycle = 1μs, duty =100%, $I_{I/O}$ = 0mA, BYTE# ≥ Vcc -0.2V or BYTE# ≤ 0.2V CS1# ≤ 0.2V, CS2 ≥ V_{CC}-0.2V, V_{IH} ≥ V_{CC}-0.2V, V_{IL} ≤ 0.2V
Standby current	I_{SB}	—	—	0.3	mA	BYTE# ≥ Vcc -0.2V or BYTE# ≤ 0.2V CS2 = V_{IL}, Others = V_{SS} to V_{CC}
Standby current	I_{SB1}	—	0.45[*5]	2	μA	~+25°C Vin = V_{SS} to V_{CC}, BYTE# ≥ Vcc -0.2V or BYTE# ≤ 0.2V (1) CS2 ≤ 0.2V or (2) CS1# ≥ V_{CC}-0.2V, CS2 ≥ V_{CC}-0.2V or (3) LB# = UB# ≥ V_{CC}-0.2V, CS1# ≤ 0.2V, CS2 ≥ V_{CC}-0.2V
		—	0.6[*6]	4	μA	~+40°C
		—	—	7	μA	~+70°C
		—	—	10	μA	~+85°C
Output high voltage	V_{OH}	2.4	—	—	V	BYTE# ≥ Vcc -0.2V or BYTE# ≤ 0.2V I_{OH} = -1mA Vcc≥2.7V
	V_{OH2}	2.0	—	—	V	BYTE# ≥ Vcc -0.2V or BYTE# ≤ 0.2V I_{OH} = -0.1mA
Output low voltage	V_{OL}	—	—	0.4	V	BYTE# ≥ Vcc -0.2V or BYTE# ≤ 0.2V I_{OL} = 2mA Vcc≥2.7V
	V_{OL2}	—	—	0.4	V	BYTE# ≥ Vcc -0.2V or BYTE# ≤ 0.2V I_{OL} = 0.1mA

Note 5. Typical parameter indicates the value for the center of distribution at 3.0V (Ta=25ºC), and not 100% tested.

Note 6. Typical parameter indicates the value for the center of distribution at 3.0V (Ta=40ºC), and not 100% tested.

Capacitance

(Ta =25°C, f =1MHz)

Parameter	Symbol	Min.	Typ.	Max.	Unit	Test conditions	Note
Input capacitance	C in	—	—	8	pF	Vin =0V	7
Input / output capacitance	$C_{I/O}$	—	—	10	pF	$V_{I/O}$ =0V	7

Note 7. This parameter is sampled and not 100% tested.

AC Characteristics

Test Conditions (Vcc = 2.4V ~ 3.6V, Ta = -40 ~ +85°C)

- Input pulse levels:
  V_{IL} = 0.4V, V_{IH} = 2.4V (Vcc=2.7V to 3.6V)
  V_{IL} = 0.4V, V_{IH} = 2.2V (Vcc=2.4V to 2.7V)
- Input rise and fall time: 5ns
- Input and output timing reference level: 1.4V
- Output load: See figures (Including scope and jig)

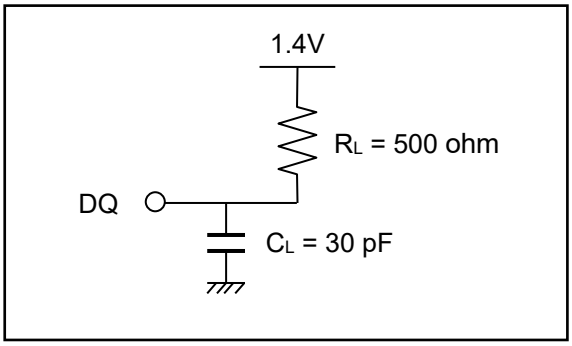

Read Cycle

Parameter	Symbol	Vcc=2.7V to 3.6V		Vcc=2.4V to 2.7V		Unit	Note
		Min.	Max.	Min.	Max.		
Read cycle time	t_{RC}	45	—	55	—	ns	
Address access time	t_{AA}	—	45	—	55	ns	
Chip select access time	t_{ACS1}	—	45	—	55	ns	
	t_{ACS2}	—	45	—	55	ns	
Output enable to output valid	t_{OE}	—	22	—	30	ns	
Output hold from address change	t_{OH}	10	—	10	—	ns	
LB#, UB# access time	t_{BA}	—	45	—	55	ns	
Chip select to output in low-Z	t_{CLZ1}	10	—	10	—	ns	8,9
	t_{CLZ2}	10	—	10	—	ns	8,9
LB#, UB# enable to low-Z	t_{BLZ}	5	—	5	—	ns	8,9
Output enable to output in low-Z	t_{OLZ}	5	—	5	—	ns	8,9
Chip deselect to output in high-Z	t_{CHZ1}	0	18	0	20	ns	8,9,10
	t_{CHZ2}	0	18	0	20	ns	8,9,10
LB#, UB# disable to high-Z	t_{BHZ}	0	18	0	20	ns	8,9,10
Output disable to output in high-Z	t_{OHZ}	0	18	0	20	ns	8,9,10

Note 8. This parameter is sampled and not 100% tested.

9. At any given temperature and voltage condition, t_{CHZ1} max is less than t_{CLZ1} min, t_{CHZ2} max is less than t_{CLZ2} min, t_{BHZ} max is less than t_{BLZ} min, and t_{OHZ} max is less than t_{OLZ} min, for any device.

10. t_{CHZ1}, t_{CHZ2}, t_{BHZ} and t_{OHZ} are defined as the time when the DQ pins enter a high-impedance state and are not referred to the DQ levels.

Write Cycle

Parameter	Symbol	Vcc=2.7V to 3.6V		Vcc=2.4V to 2.7V		Unit	Note
		Min.	Max.	Min.	Max.		
Write cycle time	t_{WC}	45	—	55	—	ns	
Address valid to write end	t_{AW}	35	—	50	—	ns	
Chip select to write end	t_{CW}	35	—	50	—	ns	
Write pulse width	t_{WP}	35	—	40	—	ns	11
LB#,UB# valid to write end	t_{BW}	35	—	50	—	ns	
Address setup time to write start	t_{AS}	0	—	0	—	ns	
Write recovery time from write end	t_{WR}	0	—	0	—	ns	
Data to write time overlap	t_{DW}	25	—	25	—	ns	
Data hold from write end	t_{DH}	0	—	0	—	ns	
Output enable from write end	t_{OW}	5	—	5	—	ns	12
Output disable to output in high-Z	t_{OHZ}	0	18	0	20	ns	12,13
Write to output in high-Z	t_{WHZ}	0	18	0	20	ns	12,13

Note 11. t_{WP} is the interval between write start and write end.
A write starts when all of (CS1#), (CS2), (WE#) and (one or both of LB# and UB#) become active.
A write is performed during the overlap of a low CS1#, a high CS2, a low WE# and a low LB# or a low UB#.
A write ends when any of (CS1#), (CS2), (WE#) or (one or both of LB# and UB#) becomes inactive.

12. This parameter is sampled and not 100% tested.
13. t_{OHZ} and t_{WHZ} are defined as the time when the DQ pins enter a high-impedance state and are not referred to the DQ levels.

BYTE# Timing Conditions

Parameter	Symbol	Vcc=2.7V to 3.6V		Vcc=2.4V to 2.7V		Unit	Note
		Min.	Max.	Min.	Max.		
Byte setup time	t_{BS}	5	—	5	—	ms	
Byte recovery time	t_{BR}	5	—	5	—	ms	

BYTE# Timing Waveforms

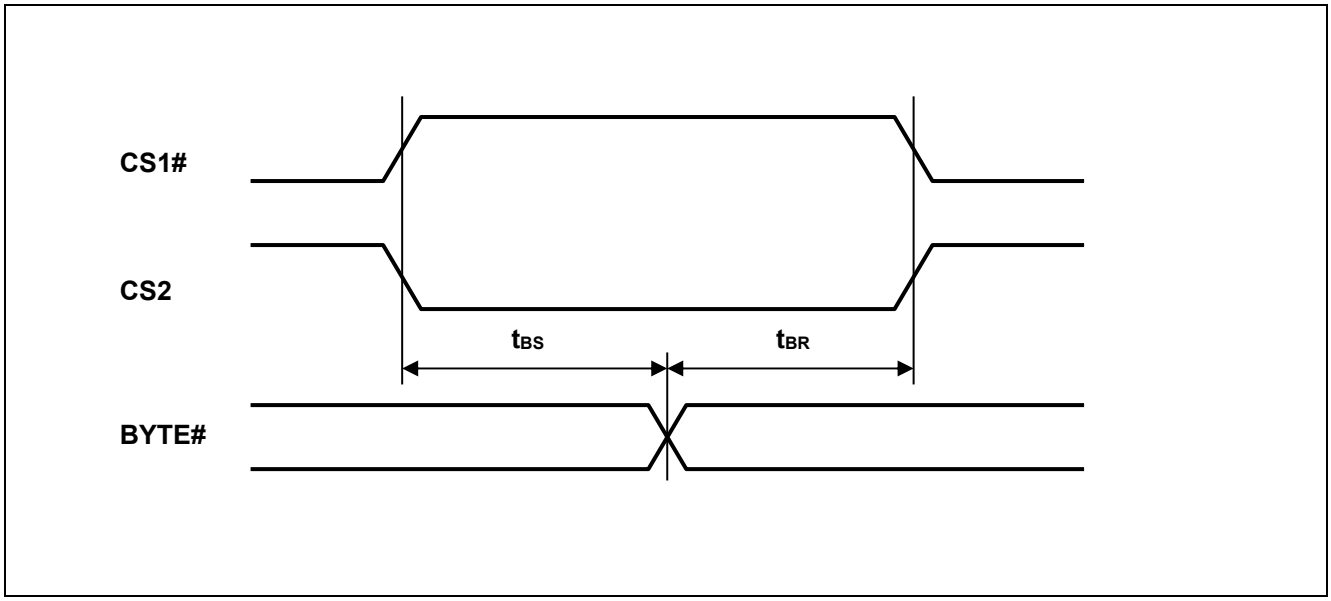

Timing Waveforms

Read Cycle[*14]

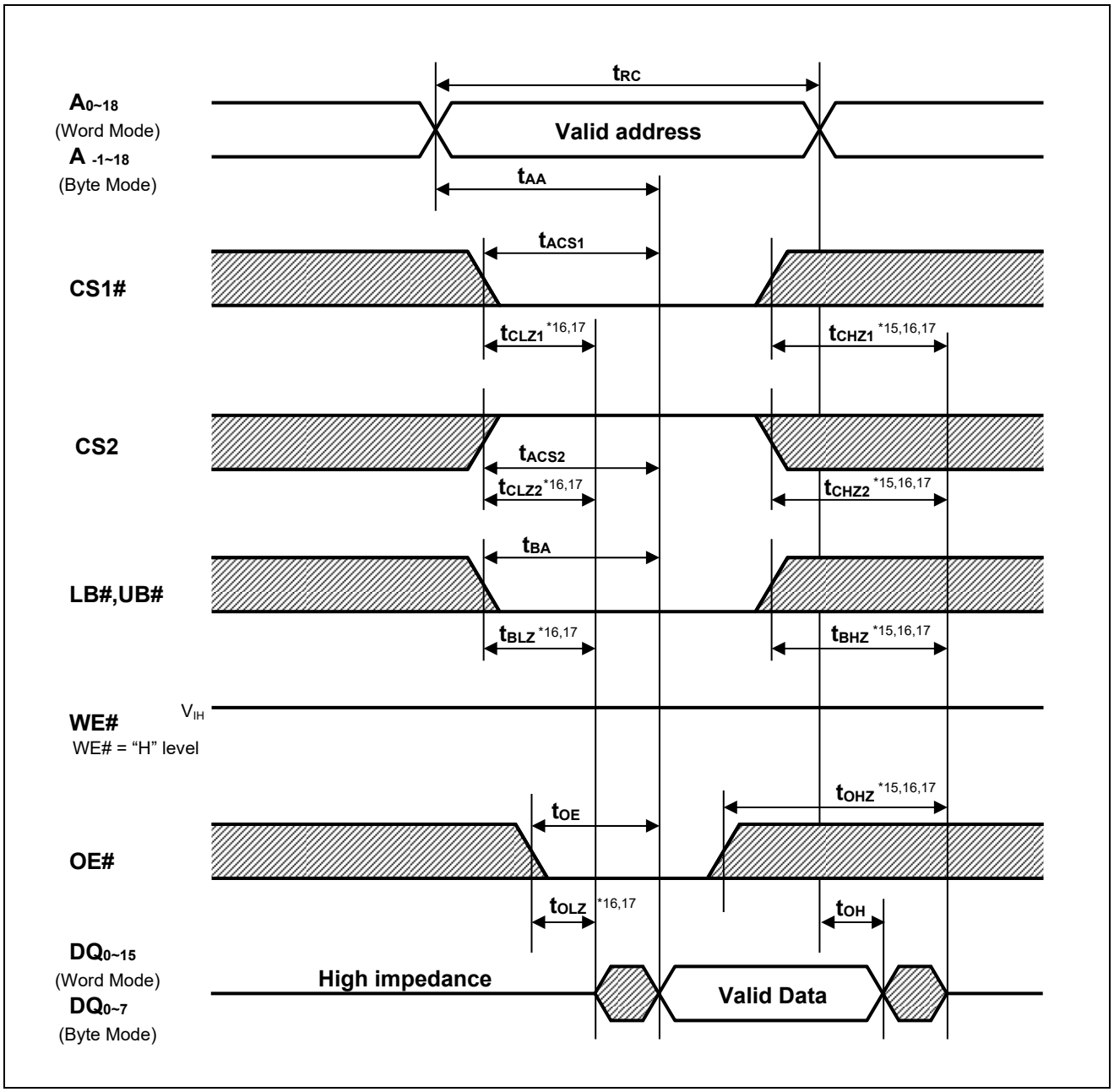

Note 14. BYTE# ≥ Vcc -0.2V or BYTE# ≤ 0.2V

15. t_{CHZ1}, t_{CHZ2}, t_{BHZ} and t_{OHZ} are defined as the time when the DQ pins enter a high-impedance state and are not referred to the DQ levels.

16. This parameter is sampled and not 100% tested

17. At any given temperature and voltage condition, t_{CHZ1} max is less than t_{CLZ1} min, t_{CHZ2} max is less than t_{CLZ2} min, t_{BHZ} max is less than t_{BLZ} min, and t_{OHZ} max is less than t_{OLZ} min, for any device.

Write Cycle (1)*18 (WE# CLOCK, OE#="H" while writing)

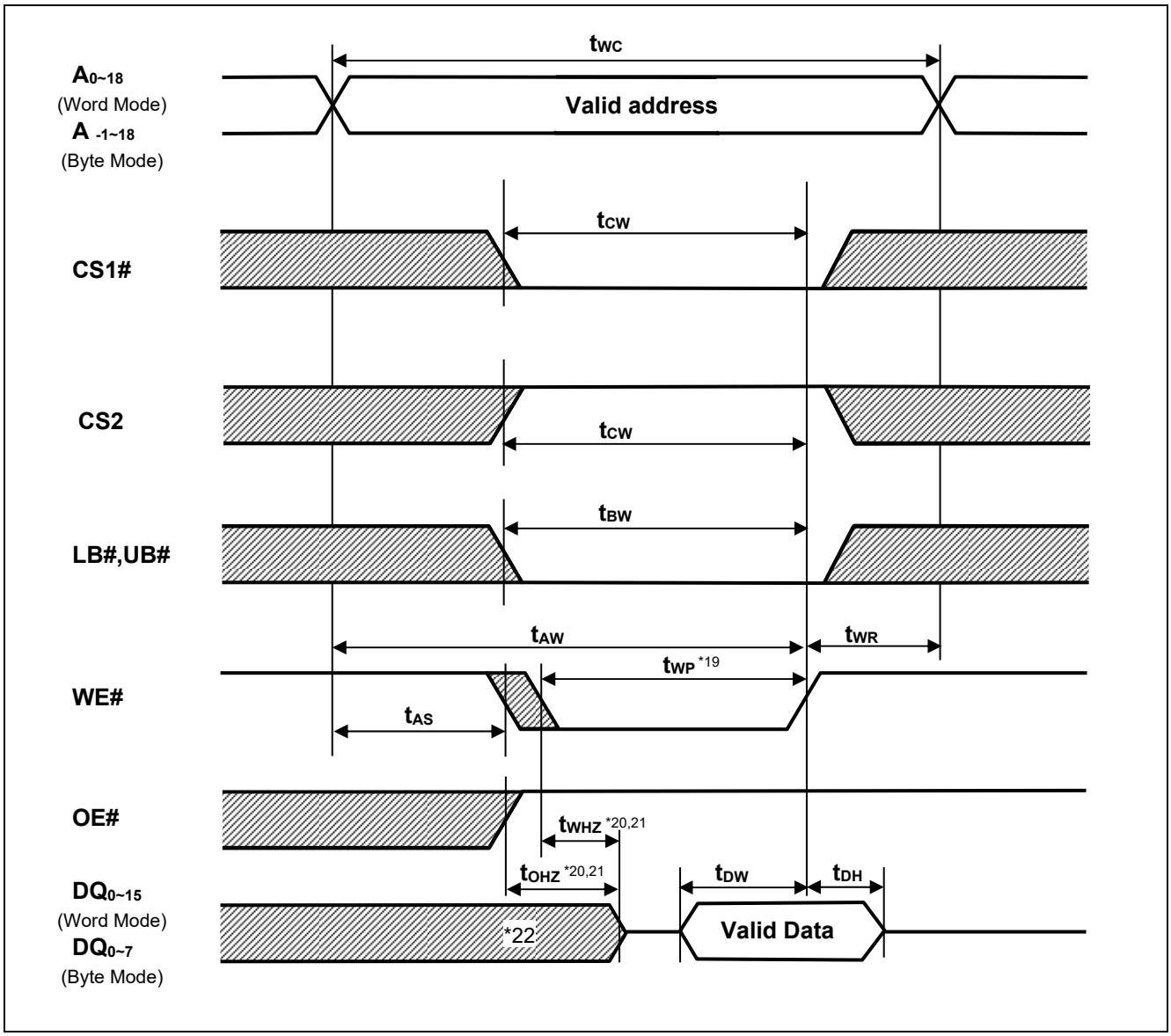

Note 18. BYTE# ≥ Vcc -0.2V or BYTE# ≤ 0.2V

19. t_{WP} is the interval between write start and write end.
A write starts when all of (CS1#), (CS2), (WE#) and (one or both of LB# and UB#) become active.
A write is performed during the overlap of a low CS1#, a high CS2, a low WE# and a low LB# or a low UB#.
A write ends when any of (CS1#), (CS2), (WE#) or (one or both of LB# and UB#) becomes inactive.

20. t_{OHZ} and t_{WHZ} are defined as the time when the DQ pins enter a high-impedance state and are not referred to the DQ levels.

21. This parameter is sampled and not 100% tested

22. During this period, DQ pins are in the output state so input signals must not be applied to the DQ pins.

Write Cycle (2)[*23] **(WE# CLOCK, OE# Low Fixed)**

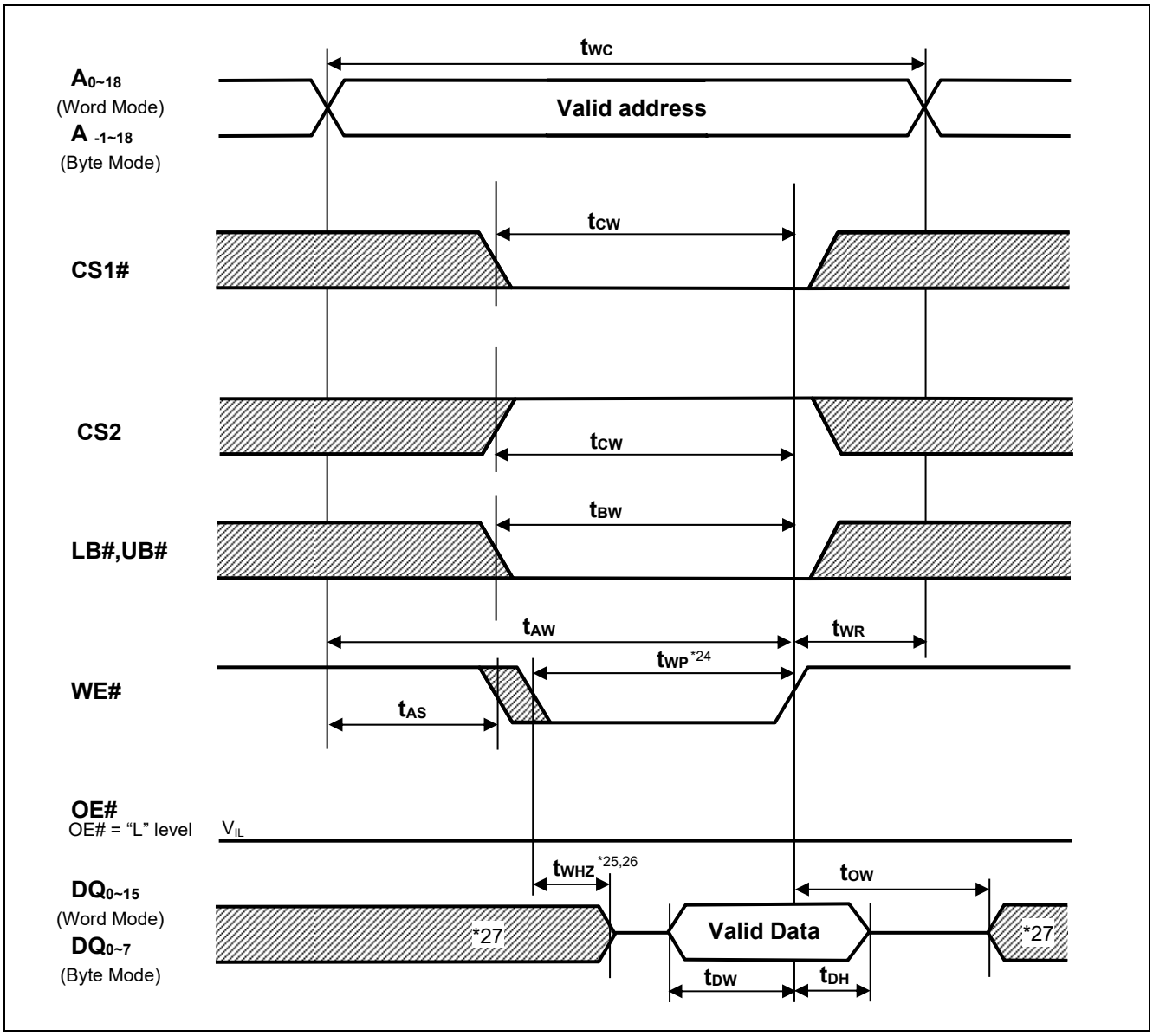

Note 23. BYTE# ≥ Vcc -0.2V or BYTE# ≤ 0.2V

24. t_{WP} is the interval between write start and write end.
A write starts when all of (CS1#), (CS2), (WE#) and (one or both of LB# and UB#) become active.
A write is performed during the overlap of a low CS1#, a high CS2, a low WE# and a low LB# or a low UB#.
A write ends when any of (CS1#), (CS2), (WE#) or (one or both of LB# and UB#) becomes inactive.

25. t_{WHZ} is defined as the time when the DQ pins enter a high-impedance state and are not referred to the DQ levels.

26. This parameter is sampled and not 100% tested.

27. During this period, DQ pins are in the output state so input signals must not be applied to the DQ pins.

Write Cycle (3)[*28] (CS1#, CS2 CLOCK)

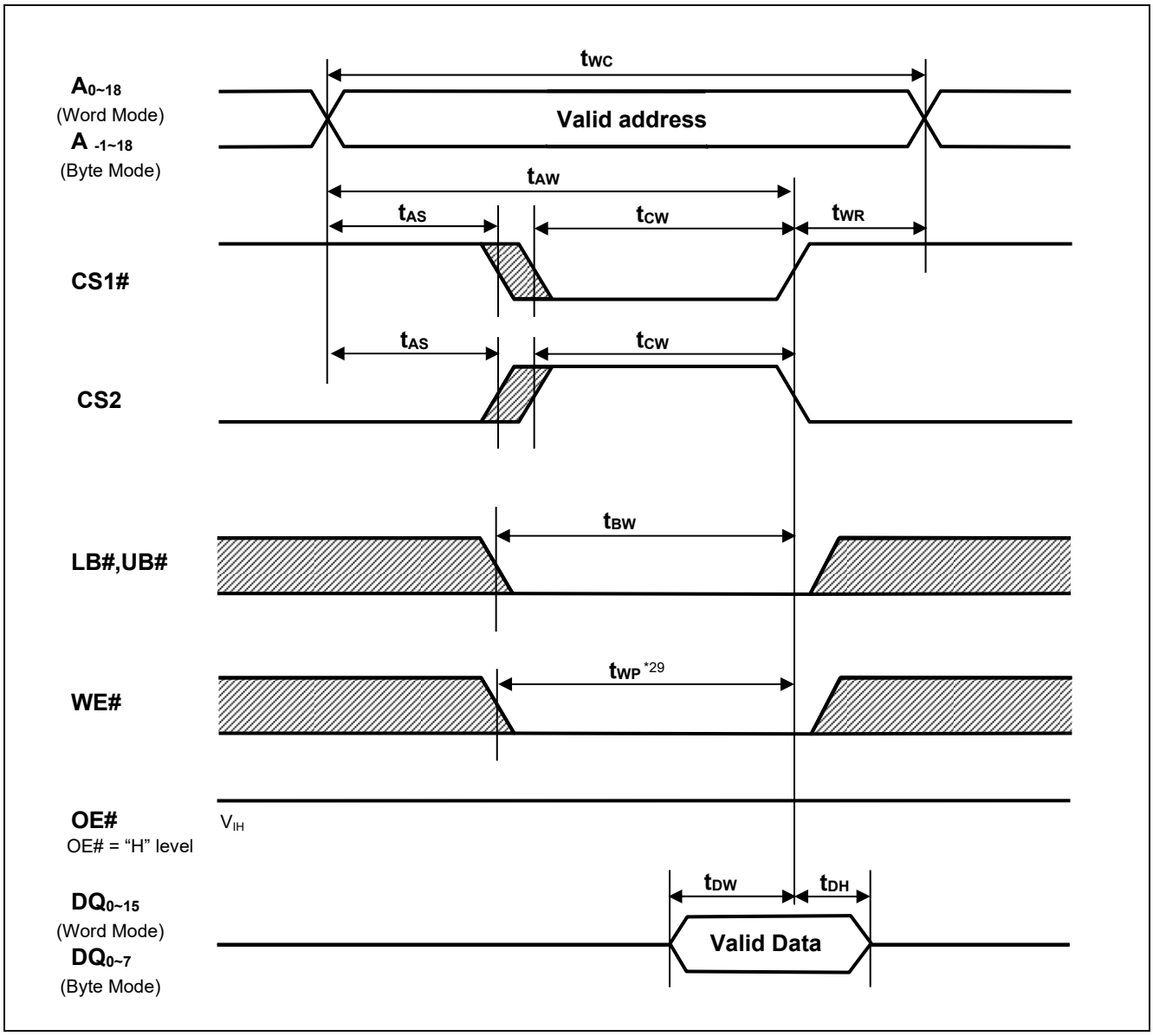

Note 28. BYTE# ≥ Vcc -0.2V or BYTE# ≤ 0.2V

29. t_{WP} is the interval between write start and write end.
A write starts when all of (CS1#), (CS2), (WE#) and (one or both of LB# and UB#) become active.
A write is performed during the overlap of a low CS1#, a high CS2, a low WE# and a low LB# or a low UB#.
A write ends when any of (CS1#), (CS2), (WE#) or (one or both of LB# and UB#) becomes inactive.

Write Cycle (4)*30 (LB#, UB# CLOCK, Word Mode)

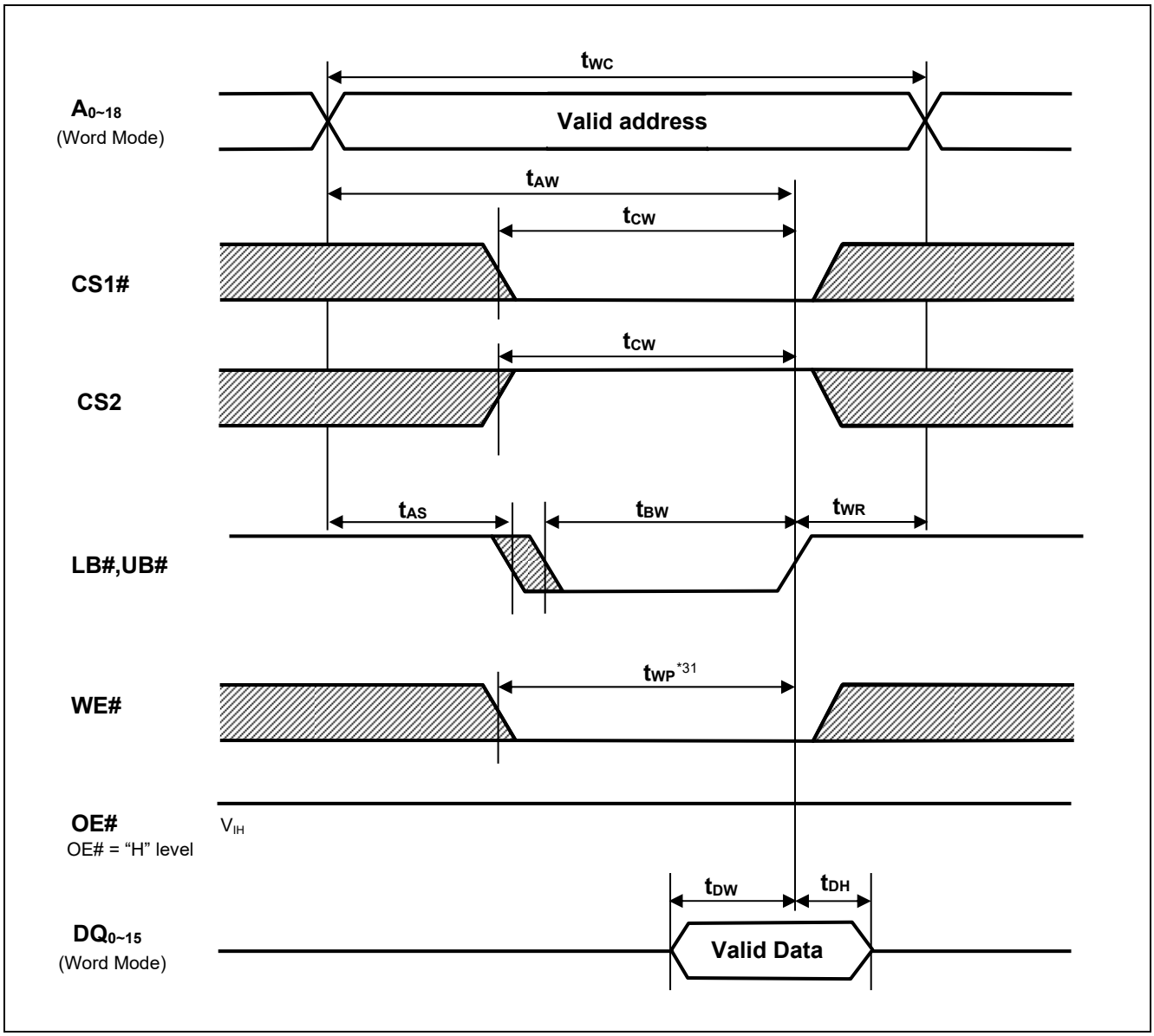

Note 30. BYTE# ≥ Vcc -0.2V

31. t_{WP} is the interval between write start and write end.
A write starts when all of (CS1#), (CS2), (WE#) and (one or both of LB# and UB#) become active.
A write is performed during the overlap of a low CS1#, a high CS2, a low WE# and a low LB# or a low UB#.
A write ends when any of (CS1#), (CS2), (WE#) or (one or both of LB# and UB#) becomes inactive.

Low V_{CC} Data Retention Characteristics

Parameter	Symbol	Min.	Typ.	Max.	Unit	Test conditions[*34]	
V_{CC} for data retention	V_{DR}	1.5	—	3.6	V	Vin ≥ 0V, BYTE# ≥ Vcc -0.2V or BYTE# ≤ 0.2V (1) CS2 ≤ 0.2V or (2) CS1# ≥ V_{CC}-0.2V, CS2 ≥ V_{CC}-0.2V or (3) LB# = UB# ≥ V_{CC}-0.2V, CS1# ≤ 0.2V, CS2 ≥ V_{CC}-0.2V	
Data retention current	I_{CCDR}	—	0.45[*32]	2	μA	~+25°C	V_{CC} = 3.0V, Vin ≥ 0V, BYTE# ≥ Vcc -0.2V or BYTE# ≤ 0.2V (1) CS2 ≤ 0.2V or (2) CS1# ≥ V_{CC}-0.2V, CS2 ≥ V_{CC}-0.2V or (3) LB# = UB# ≥ V_{CC}-0.2V, CS1# ≤ 0.2V, CS2 ≥ V_{CC}-0.2V
		—	0.6[*33]	4	μA	~+40°C	
		—	—	7	μA	~+70°C	
		—	—	10	μA	~+85°C	
Chip deselect time to data retention	t_{CDR}	0	—	—	ns	See retention waveform.	
Operation recovery time	t_R	5	—	—	ms		

Note 32. Typical parameter indicates the value for the center of distribution at 3.0V (Ta=25ºC), and not 100% tested.

33. Typical parameter indicates the value for the center of distribution at 3.0V (Ta=40ºC), and not 100% tested.

34. CS2 controls address buffer, WE# buffer, CS1# buffer, OE# buffer, LB# buffer, UB# buffer and DQ buffer. If CS2 controls data retention mode, Vin levels (address, WE#, CS1#, OE#, LB#, UB#, DQ) can be in the high impedance state. If CS1# controls data retention mode, CS2 must be CS2 ≥ V_{CC}-0.2V or CS2 ≤ 0.2V. The other inputs levels (address, WE#, OE#, LB#, UB#, DQ) can be in the high-impedance state.

Low Vcc Data Retention Timing Waveforms (CS1# controlled)[*35]

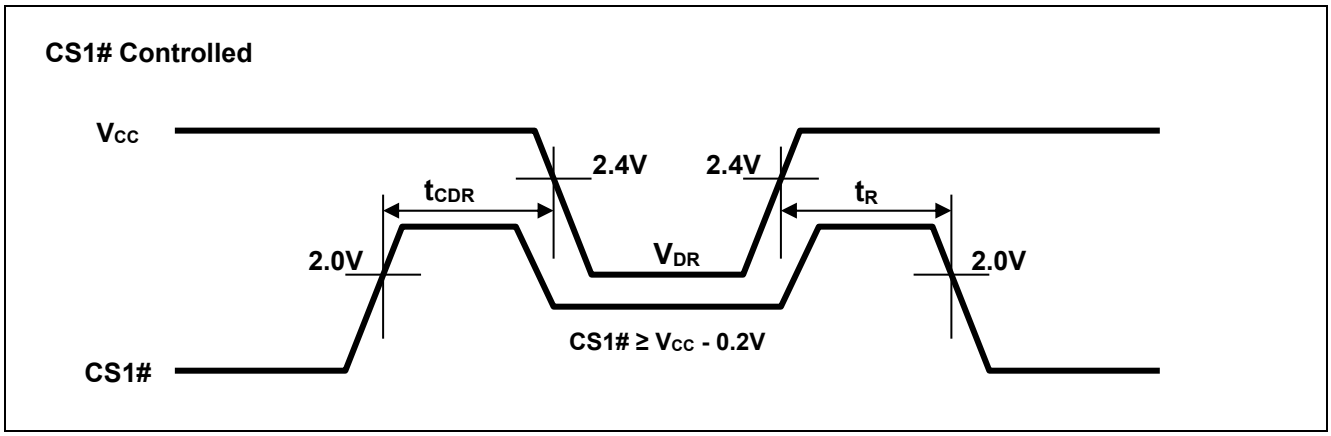

Low Vcc Data Retention Timing Waveforms (CS2 controlled)[*35]

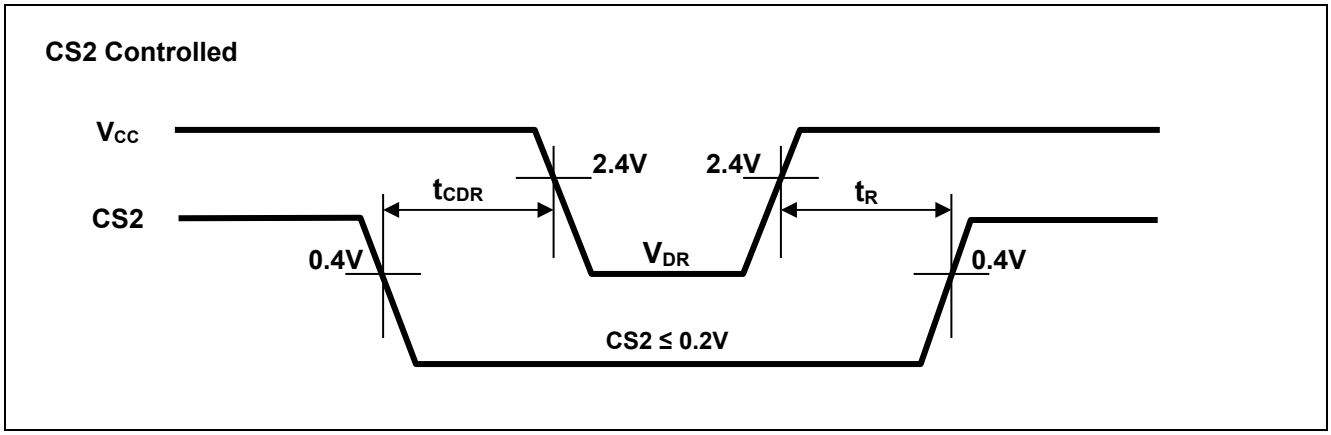

Low Vcc Data Retention Timing Waveforms (LB#,UB# controlled, Word Mode)[*36]

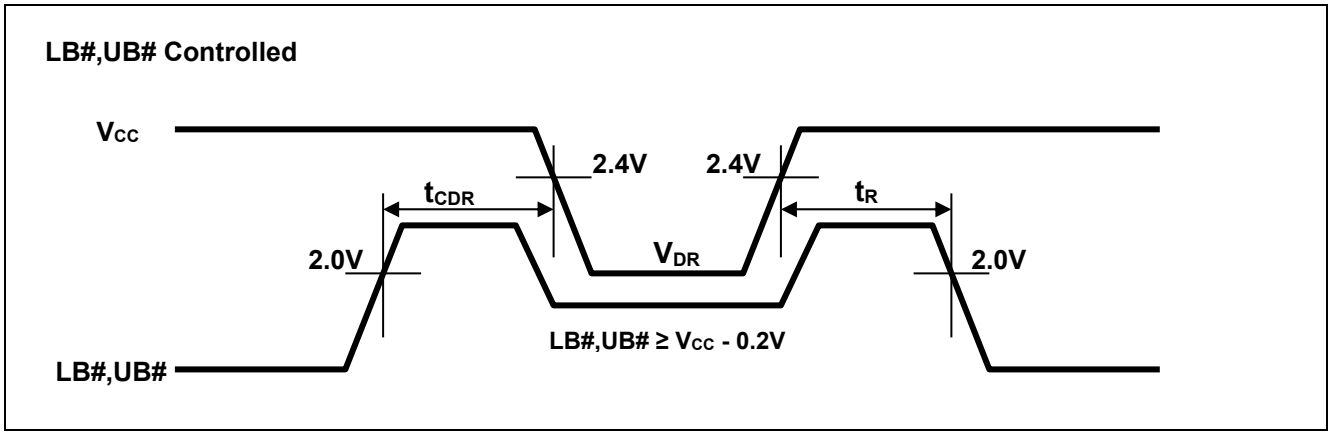

Note 35. BYTE# ≥ Vcc -0.2V or BYTE# ≤ 0.2V
36. BYTE# ≥ Vcc -0.2V

Revision History	RMLV0816BGSA Data Sheet

Rev.	Date	Description	
		Page	Summary
1.00	2014.11.28	—	First Edition issued
2.00	2015.06.26	P.1, 5 P.5 P.13	Standby current I_{SB1} : 25°C 0.6μA ->0.45μA (typ.), 40°C 2μA ->0.6μA (typ.) Average operating current I_{CC2} : 25°C 2mA ->1.5mA (typ.) Data retention current I_{CCDR} : 25°C 0.6μA ->0.45μA (typ.), 40°C 2μA ->0.6μA (typ.)
2.01	2020.02.20	Last page	Updated the Notice to the latest version

All trademarks and registered trademarks are the property of their respective owners.

IMPORTANT NOTICE AND DISCLAIMER

RENESAS ELECTRONICS CORPORATION AND ITS SUBSIDIARIES (“RENESAS”) PROVIDES TECHNICAL SPECIFICATIONS AND RELIABILITY DATA (INCLUDING DATASHEETS), DESIGN RESOURCES (INCLUDING REFERENCE DESIGNS), APPLICATION OR OTHER DESIGN ADVICE, WEB TOOLS, SAFETY INFORMATION, AND OTHER RESOURCES “AS IS” AND WITH ALL FAULTS, AND DISCLAIMS ALL WARRANTIES, EXPRESS OR IMPLIED, INCLUDING, WITHOUT LIMITATION, ANY IMPLIED WARRANTIES OF MERCHANTABILITY, FITNESS FOR A PARTICULAR PURPOSE, OR NON-INFRINGEMENT OF THIRD PARTY INTELLECTUAL PROPERTY RIGHTS.

These resources are intended for developers skilled in the art designing with Renesas products. You are solely responsible for (1) selecting the appropriate products for your application, (2) designing, validating, and testing your application, and (3) ensuring your application meets applicable standards, and any other safety, security, or other requirements. These resources are subject to change without notice. Renesas grants you permission to use these resources only for development of an application that uses Renesas products. Other reproduction or use of these resources is strictly prohibited. No license is granted to any other Renesas intellectual property or to any third party intellectual property. Renesas disclaims responsibility for, and you will fully indemnify Renesas and its representatives against, any claims, damages, costs, losses, or liabilities arising out of your use of these resources. Renesas' products are provided only subject to Renesas' Terms and Conditions of Sale or other applicable terms agreed to in writing. No use of any Renesas resources expands or otherwise alters any applicable warranties or warranty disclaimers for these products.

(Rev.1.0 Mar 2020)

Corporate Headquarters

TOYOSU FORESIA, 3-2-24 Toyosu,
Koto-ku, Tokyo 135-0061, Japan
www.renesas.com

Contact Information

For further information on a product, technology, the most up-to-date version of a document, or your nearest sales office, please visit:
www.renesas.com/contact/

Trademarks

Renesas and the Renesas logo are trademarks of Renesas Electronics Corporation. All trademarks and registered trademarks are the property of their respective owners.

© 2020 Renesas Electronics Corporation. All rights reserved.

Looking for pricing, stock, or lifecycle information?

Click below to explore more details on WIN SOURCE:

- View RMLV0816BGSA-4S2#AA0 on WIN SOURCE
- Renesas Electronics America Information

Optimize Your Supply Chain with WIN SOURCE Solutions

- Global Sourcing Solution
- Obsolete Management
- Cost Control Management
- Shortage Management
- Alternative Solution
- Excess Inventory Management