THE DATASHEET OF

EP1K10QC208-2N

win-source.net 0086-755-83957316

ACEX 1K

Programmable Logic Device Family

May 2003, ver. 3.4 Data Sheet

Features…

- Programmable logic devices (PLDs), providing low cost system-on-a-programmable-chip (SOPC) integration in a single device
  - Enhanced embedded array for implementing megafunctions such as efficient memory and specialized logic functions
  - Dual-port capability with up to 16-bit width per embedded array block (EAB)
  - Logic array for general logic functions
- High density
  - 10,000 to 100,000 typical gates (see Table 1)
  - Up to 49,152 RAM bits (4,096 bits per EAB, all of which can be used without reducing logic capacity)
- Cost-efficient programmable architecture for high-volume applications
  - Cost-optimized process
  - Low cost solution for high-performance communications applications
- System-level features
  - MultiVolt™ I/O pins can drive or be driven by 2.5-V, 3.3-V, or 5.0-V devices
  - Low power consumption
  - Bidirectional I/O performance (setup time [t_{SU}] and clock-to-output delay [t_{CO}]) up to 250 MHz
  - Fully compliant with the peripheral component interconnect Special Interest Group (PCI SIG) ***PCI Local Bus Specification, Revision 2.2*** for 3.3-V operation at 33 MHz or 66 MHz
- Extended temperature range

Table 1. ACEX™ 1K Device Features

Feature	EP1K10	EP1K30	EP1K50	EP1K100
Typical gates	10,000	30,000	50,000	100,000
Maximum system gates	56,000	119,000	199,000	257,000
Logic elements (LEs)	576	1,728	2,880	4,992
EABs	3	6	10	12
Total RAM bits	12,288	24,576	40,960	49,152
Maximum user I/O pins	136	171	249	333

…and More Features

- -1 speed grade devices are compliant with ***PCI Local Bus Specification, Revision 2.2*** for 5.0-V operation
- Built-in Joint Test Action Group (JTAG) boundary-scan test (BST) circuitry compliant with IEEE Std. 1149.1-1990, available without consuming additional device logic.
- Operate with a 2.5-V internal supply voltage
- In-circuit reconfigurability (ICR) via external configuration devices, intelligent controller, or JTAG port
- ClockLock™ and ClockBoost™ options for reduced clock delay, clock skew, and clock multiplication
- Built-in, low-skew clock distribution trees
- 100% functional testing of all devices; test vectors or scan chains are not required
- Pull-up on I/O pins before and during configuration

■ Flexible interconnect
- FastTrack® Interconnect continuous routing structure for fast, predictable interconnect delays
- Dedicated carry chain that implements arithmetic functions such as fast adders, counters, and comparators (automatically used by software tools and megafunctions)
- Dedicated cascade chain that implements high-speed, high-fan-in logic functions (automatically used by software tools and megafunctions)
- Tri-state emulation that implements internal tri-state buses
- Up to six global clock signals and four global clear signals

■ Powerful I/O pins
- Individual tri-state output enable control for each pin
- Open-drain option on each I/O pin
- Programmable output slew-rate control to reduce switching noise
- Clamp to V_{CCIO} user-selectable on a pin-by-pin basis
- Supports hot-socketing

- Software design support and automatic place-and-route provided by Altera development systems for Windows-based PCs and Sun SPARCstation, and HP 9000 Series 700 / 800 workstations
- Flexible package options are available in 100 to 484 pins, including the innovative FineLine BGA™ packages (see Tables 2 and 3)
- Additional design entry and simulation support provided by EDIF 2 0 0 and 3 0 0 netlist files, library of parameterized modules (LPM), DesignWare components, Verilog HDL, VHDL, and other interfaces to popular EDA tools from manufacturers such as Cadence, Exemplar Logic, Mentor Graphics, OrCAD, Synopsys, Synplicity, VeriBest, and Viewlogic

Table 2. ACEX 1K Package Options & I/O Pin Count *Notes (1), (2)*

Device	100-Pin TQFP	144-Pin TQFP	208-Pin PQFP	256-Pin FineLine BGA	484-Pin FineLine BGA
EP1K10	66	92	120	136	136 *(3)*
EP1K30		102	147	171	171 *(3)*
EP1K50		102	147	186	249
EP1K100			147	186	333

Notes:

(1) ACEX 1K device package types include thin quad flat pack (TQFP), plastic quad flat pack (PQFP), and FineLine BGA packages.

(2) Devices in the same package are pin-compatible, although some devices have more I / O pins than others. When planning device migration, use the I / O pins that are common to all devices.

(3) This option is supported with a 256-pin FineLine BGA package. By using SameFrame™ pin migration, all FineLine BGA packages are pin-compatible. For example, a board can be designed to support 256-pin and 484-pin FineLine BGA packages.

Table 3. ACEX 1K Package Sizes

Device	100-Pin TQFP	144-Pin TQFP	208-Pin PQFP	256-Pin FineLine BGA	484-Pin FineLine BGA
Pitch (mm)	0.50	0.50	0.50	1.0	1.0
Area (mm^2)	256	484	936	289	529
Length × width (mm × mm)	16 × 16	22 × 22	30.6 × 30.6	17 × 17	23 × 23

General Description

Altera® ACEX 1K devices provide a die-efficient, low-cost architecture by combining look-up table (LUT) architecture with EABs. LUT-based logic provides optimized performance and efficiency for data-path, register intensive, mathematical, or digital signal processing (DSP) designs, while EABs implement RAM, ROM, dual-port RAM, or first-in first-out (FIFO) functions. These elements make ACEX 1K suitable for complex logic functions and memory functions such as digital signal processing, wide data-path manipulation, data transformation and microcontrollers, as required in high-performance communications applications. Based on reconfigurable CMOS SRAM elements, the ACEX 1K architecture incorporates all features necessary to implement common gate array megafunctions, along with a high pin count to enable an effective interface with system components. The advanced process and the low voltage requirement of the 2.5-V core allow ACEX 1K devices to meet the requirements of low-cost, high-volume applications ranging from DSL modems to low-cost switches.

The ability to reconfigure ACEX 1K devices enables complete testing prior to shipment and allows the designer to focus on simulation and design verification. ACEX 1K device reconfigurability eliminates inventory management for gate array designs and test vector generation for fault coverage.

Table 4 shows ACEX 1K device performance for some common designs. All performance results were obtained with Synopsys DesignWare or LPM functions. Special design techniques are not required to implement the applications; the designer simply infers or instantiates a function in a Verilog HDL, VHDL, Altera Hardware Description Language (AHDL), or schematic design file.

Table 4. ACEX 1K Device Performance

Application	Resources Used		Performance			
	LEs	EABs	Speed Grade			Units
			-1	-2	-3	
16-bit loadable counter	16	0	285	232	185	MHz
16-bit accumulator	16	0	285	232	185	MHz
16-to-1 multiplexer *(1)*	10	0	3.5	4.5	6.6	ns
16-bit multiplier with 3-stage pipeline *(2)*	592	0	156	131	93	MHz
256 × 16 RAM read cycle speed *(2)*	0	1	278	196	143	MHz
256 × 16 RAM write cycle speed *(2)*	0	1	185	143	111	MHz

Notes:
(1) This application uses combinatorial inputs and outputs.
(2) This application uses registered inputs and outputs.

Table 5 shows ACEX 1K device performance for more complex designs. These designs are available as Altera MegaCore™ functions.

Table 5. ACEX 1K Device Performance for Complex Designs

Application	LEs Used	Performance			
		Speed Grade			Units
		-1	-2	-3	
16-bit, 8-tap parallel finite impulse response (FIR) filter	597	192	156	116	MSPS
8-bit, 512-point Fast Fourier transform (FFT) function	1,854	23.4	28.7	38.9	µs
		113	92	68	MHz
a16450 universal asynchronous receiver/transmitter (UART)	342	36	28	20.5	MHz

Each ACEX 1K device contains an embedded array and a logic array. The embedded array is used to implement a variety of memory functions or complex logic functions, such as digital signal processing (DSP), wide data-path manipulation, microcontroller applications, and data-transformation functions. The logic array performs the same function as the sea-of-gates in the gate array and is used to implement general logic such as counters, adders, state machines, and multiplexers. The combination of embedded and logic arrays provides the high performance and high density of embedded gate arrays, enabling designers to implement an entire system on a single device.

ACEX 1K devices are configured at system power-up with data stored in an Altera serial configuration device or provided by a system controller. Altera offers EPC16, EPC2, EPC1, and EPC1441 configuration devices, which configure ACEX 1K devices via a serial data stream. Configuration data can also be downloaded from system RAM or via the Altera MasterBlaster™, ByteBlasterMV™, or BitBlaster™ download cables. After an ACEX 1K device has been configured, it can be reconfigured in-circuit by resetting the device and loading new data. Because reconfiguration requires less than 40 ms, real-time changes can be made during system operation.

ACEX 1K devices contain an interface that permits microprocessors to configure ACEX 1K devices serially or in parallel, and synchronously or asynchronously. The interface also enables microprocessors to treat an ACEX 1K device as memory and configure it by writing to a virtual memory location, simplifying device reconfiguration.

For more information on the configuration of ACEX 1K devices, see the following documents:

- *Configuration Devices for ACEX, APEX, FLEX, & Mercury Devices Data Sheet*
- *MasterBlaster Serial/USB Communications Cable Data Sheet*
- *ByteBlasterMV Parallel Port Download Cable Data Sheet*
- *BitBlaster Serial Download Cable Data Sheet*

ACEX 1K devices are supported by Altera development systems, which are integrated packages that offer schematic, text (including AHDL), and waveform design entry, compilation and logic synthesis, full simulation and worst-case timing analysis, and device configuration. The software provides EDIF 2 0 0 and 3 0 0, LPM, VHDL, Verilog HDL, and other interfaces for additional design entry and simulation support from other industry-standard PC- and UNIX workstation-based EDA tools.

The Altera software works easily with common gate array EDA tools for synthesis and simulation. For example, the Altera software can generate Verilog HDL files for simulation with tools such as Cadence Verilog-XL. Additionally, the Altera software contains EDA libraries that use device-specific features such as carry chains, which are used for fast counter and arithmetic functions. For instance, the Synopsys Design Compiler library supplied with the Altera development system includes DesignWare functions that are optimized for the ACEX 1K device architecture.

The Altera development systems run on Windows-based PCs and Sun SPARCstation, and HP 9000 Series 700/800 workstations.

For more information, see the *MAX+PLUS II Programmable Logic Development System & Software Data Sheet* and the *Quartus Programmable Logic Development System & Software Data Sheet*.

Functional Description

Each ACEX 1K device contains an enhanced embedded array that implements memory and specialized logic functions, and a logic array that implements general logic.

The embedded array consists of a series of EABs. When implementing memory functions, each EAB provides 4,096 bits, which can be used to create RAM, ROM, dual-port RAM, or first-in first-out (FIFO) functions. When implementing logic, each EAB can contribute 100 to 600 gates towards complex logic functions such as multipliers, microcontrollers, state machines, and DSP functions. EABs can be used independently, or multiple EABs can be combined to implement larger functions.

The logic array consists of logic array blocks (LABs). Each LAB contains eight LEs and a local interconnect. An LE consists of a 4-input LUT, a programmable flipflop, and dedicated signal paths for carry and cascade functions. The eight LEs can be used to create medium-sized blocks of logic—such as 8-bit counters, address decoders, or state machines—or combined across LABs to create larger logic blocks. Each LAB represents about 96 usable logic gates.

Signal interconnections within ACEX 1K devices (as well as to and from device pins) are provided by the FastTrack Interconnect routing structure, which is a series of fast, continuous row and column channels that run the entire length and width of the device.

Each I / O pin is fed by an I / O element (IOE) located at the end of each row and column of the FastTrack Interconnect routing structure. Each IOE contains a bidirectional I / O buffer and a flipflop that can be used as either an output or input register to feed input, output, or bidirectional signals. When used with a dedicated clock pin, these registers provide exceptional performance. As inputs, they provide setup times as low as 1.1 ns and hold times of 0 ns. As outputs, these registers provide clock-to-output times as low as 2.5 ns. IOEs provide a variety of features, such as JTAG BST support, slew-rate control, tri-state buffers, and open-drain outputs.

Figure 1 shows a block diagram of the ACEX 1K device architecture. Each group of LEs is combined into an LAB; groups of LABs are arranged into rows and columns. Each row also contains a single EAB. The LABs and EABs are interconnected by the FastTrack Interconnect routing structure. IOEs are located at the end of each row and column of the FastTrack Interconnect routing structure.

Figure 1. ACEX 1K Device Block Diagram

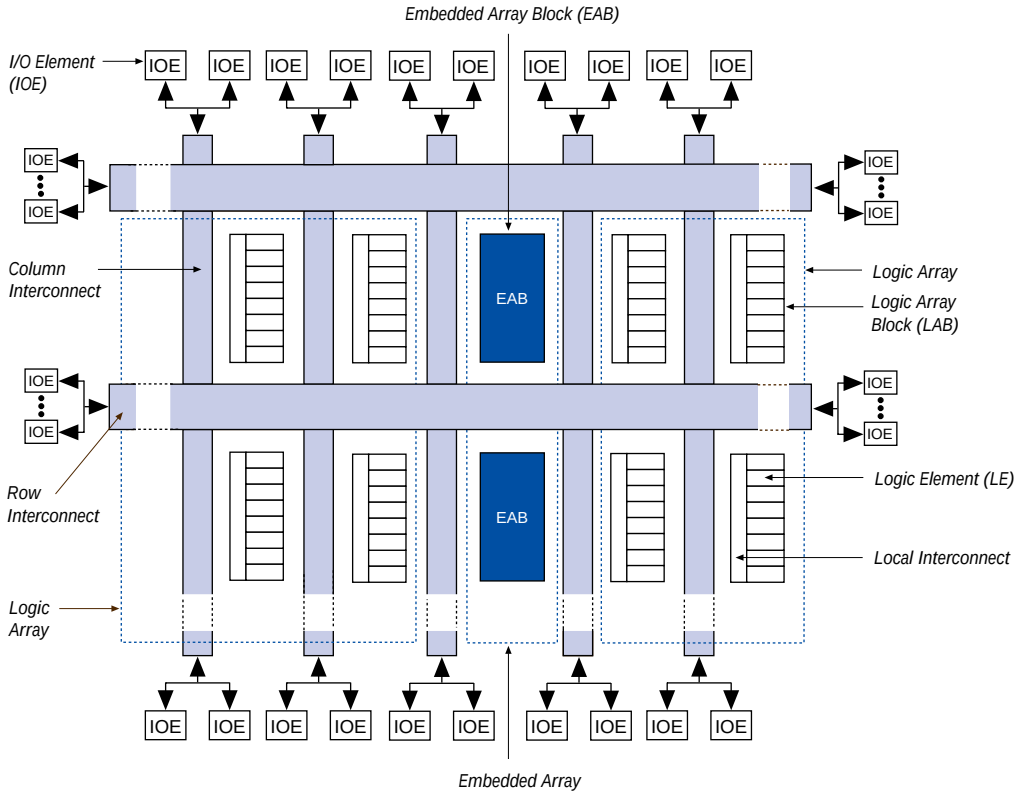

ACEX 1K devices provide six dedicated inputs that drive the flipflops' control inputs and ensure the efficient distribution of high-speed, low-skew (less than 1.0 ns) control signals. These signals use dedicated routing channels that provide shorter delays and lower skews than the FastTrack Interconnect routing structure. Four of the dedicated inputs drive four global signals. These four global signals can also be driven by internal logic, providing an ideal solution for a clock divider or an internally generated asynchronous clear signal that clears many registers in the device.

Embedded Array Block

The EAB is a flexible block of RAM, with registers on the input and output ports, that is used to implement common gate array megafunctions. Because it is large and flexible, the EAB is suitable for functions such as multipliers, vector scalars, and error correction circuits. These functions can be combined in applications such as digital filters and microcontrollers.

Logic functions are implemented by programming the EAB with a read-only pattern during configuration, thereby creating a large LUT. With LUTs, combinatorial functions are implemented by looking up the results rather than by computing them. This implementation of combinatorial functions can be faster than using algorithms implemented in general logic, a performance advantage that is further enhanced by the fast access times of EABs. The large capacity of EABs enables designers to implement complex functions in a single logic level without the routing delays associated with linked LEs or field-programmable gate array (FPGA) RAM blocks. For example, a single EAB can implement any function with 8 inputs and 16 outputs. Parameterized functions, such as LPM functions, can take advantage of the EAB automatically.

The ACEX 1K enhanced EAB supports dual-port RAM. The dual-port structure is ideal for FIFO buffers with one or two clocks. The ACEX 1K EAB can also support up to 16-bit-wide RAM blocks. The ACEX 1K EAB can act in dual-port or single-port mode. When in dual-port mode, separate clocks may be used for EAB read and write sections, allowing the EAB to be written and read at different rates. It also has separate synchronous clock enable signals for the EAB read and write sections, which allow independent control of these sections.

The EAB can also be used for bidirectional, dual-port memory applications where two ports read or write simultaneously. To implement this type of dual-port memory, two EABs are used to support two simultaneous reads or writes.

Alternatively, one clock and clock enable can be used to control the input registers of the EAB, while a different clock and clock enable control the output registers (see Figure 2).

Figure 2. ACEX 1K Device in Dual-Port RAM Mode *Note (1)*

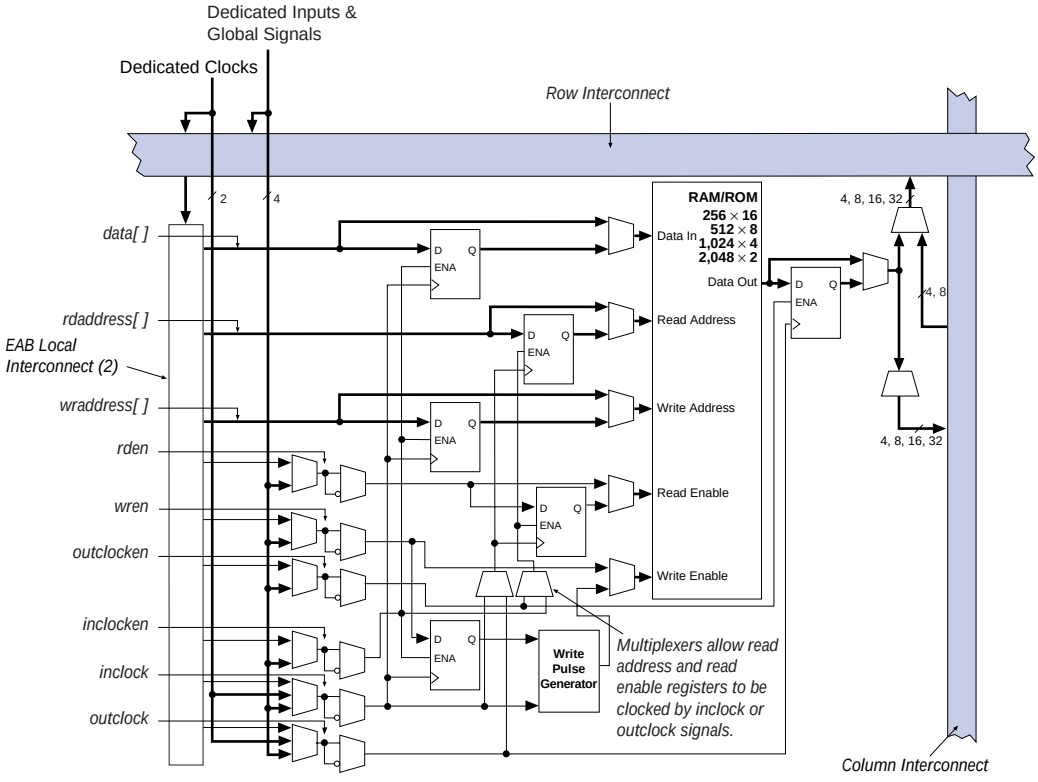

Notes:

(1) All registers can be asynchronously cleared by EAB local interconnect signals, global signals, or the chip-wide reset.

(2) EP1K10, EP1K30, and EP1K50 devices have 88 EAB local interconnect channels; EP1K100 devices have 104 EAB local interconnect channels.

The EAB can use Altera megafunctions to implement dual-port RAM applications where both ports can read or write, as shown in Figure 3. The ACEX 1K EAB can also be used in a single-port mode (see Figure 4).

Figure 3. ACEX 1K EAB in Dual-Port RAM Mode

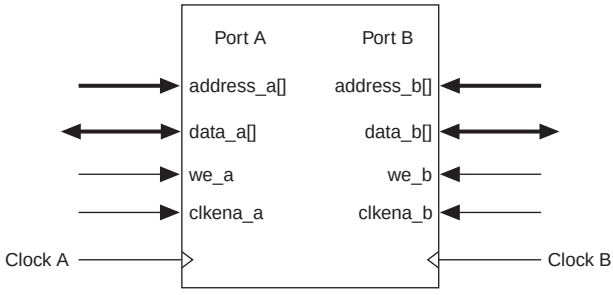

Figure 4. ACEX 1K Device in Single-Port RAM Mode

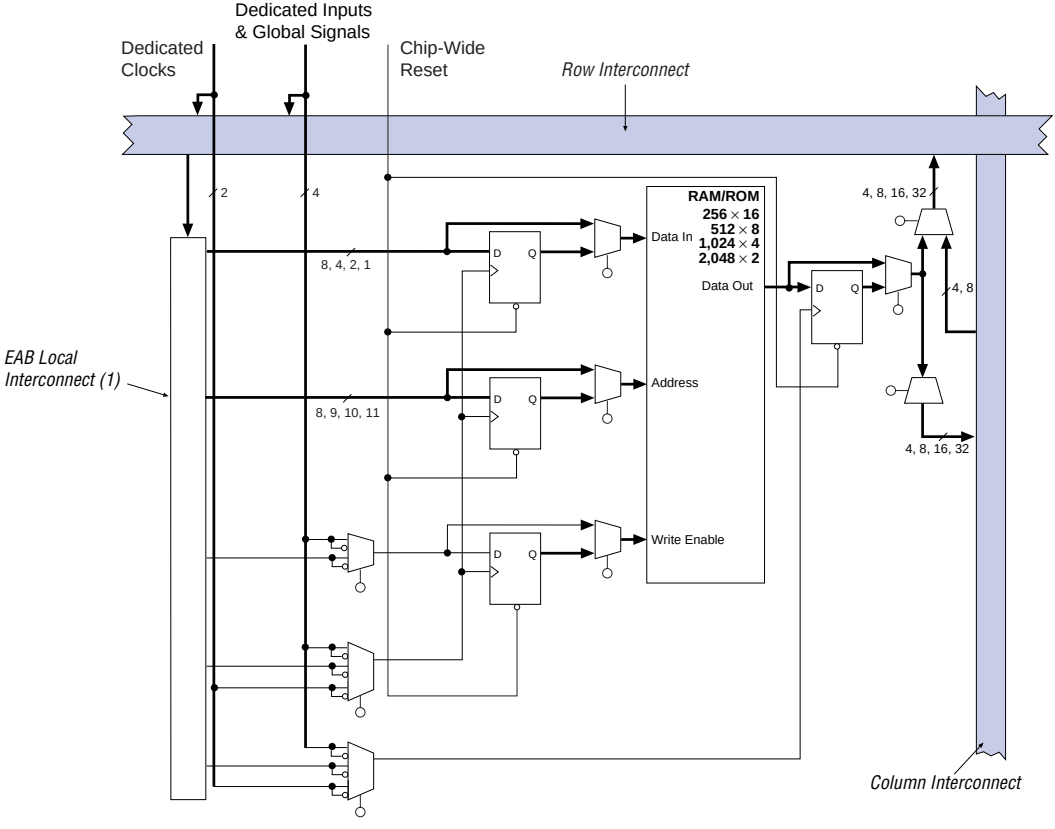

Note:

(1) EP1K10, EP1K30, and EP1K50 devices have 88 EAB local interconnect channels; EP1K100 devices have 104 EAB local interconnect channels.

EABs can be used to implement synchronous RAM, which is easier to use than asynchronous RAM. A circuit using asynchronous RAM must generate the RAM write enable signal, while ensuring that its data and address signals meet setup and hold time specifications relative to the write enable signal. In contrast, the EAB's synchronous RAM generates its own write enable signal and is self-timed with respect to the input or write clock. A circuit using the EAB's self-timed RAM must only meet the setup and hold time specifications of the global clock.

When used as RAM, each EAB can be configured in any of the following sizes: 256 × 16; 512 × 8; 1,024 × 4; or 2,048 × 2. Figure 5 shows the ACEX 1K EAB memory configurations.

Figure 5. ACEX 1K EAB Memory Configurations

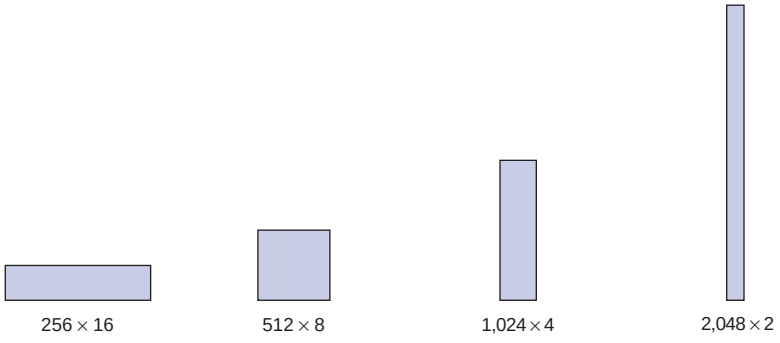

Larger blocks of RAM are created by combining multiple EABs. For example, two 256 × 16 RAM blocks can be combined to form a 256 × 32 block, and two 512 × 8 RAM blocks can be combined to form a 512 × 16 block. Figure 6 shows examples of multiple EAB combination.

Figure 6. Examples of Combining ACEX 1K EABs

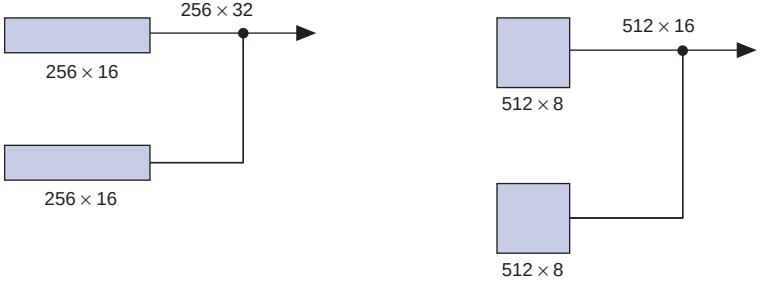

If necessary, all EABs in a device can be cascaded to form a single RAM block. EABs can be cascaded to form RAM blocks of up to 2,048 words without impacting timing. Altera software automatically combines EABs to meet a designer's RAM specifications.

EABs provide flexible options for driving and controlling clock signals. Different clocks and clock enables can be used for reading and writing to the EAB. Registers can be independently inserted on the data input, EAB output, write address, write enable signals, read address, and read enable signals. The global signals and the EAB local interconnect can drive write-enable, read-enable, and clock-enable signals. The global signals, dedicated clock pins, and EAB local interconnect can drive the EAB clock signals. Because the LEs drive the EAB local interconnect, the LEs can control write-enable, read-enable, clear, clock, and clock-enable signals.

An EAB is fed by a row interconnect and can drive out to row and column interconnects. Each EAB output can drive up to two row channels and up to two column channels; the unused row channel can be driven by other LEs. This feature increases the routing resources available for EAB outputs (see Figures 2 and 4). The column interconnect, which is adjacent to the EAB, has twice as many channels as other columns in the device.

Logic Array Block

An LAB consists of eight LEs, their associated carry and cascade chains, LAB control signals, and the LAB local interconnect. The LAB provides the coarse-grained structure to the ACEX 1K architecture, facilitating efficient routing with optimum device utilization and high performance. Figure 7 shows the ACEX 1K LAB.

Figure 7. ACEX 1K LAB

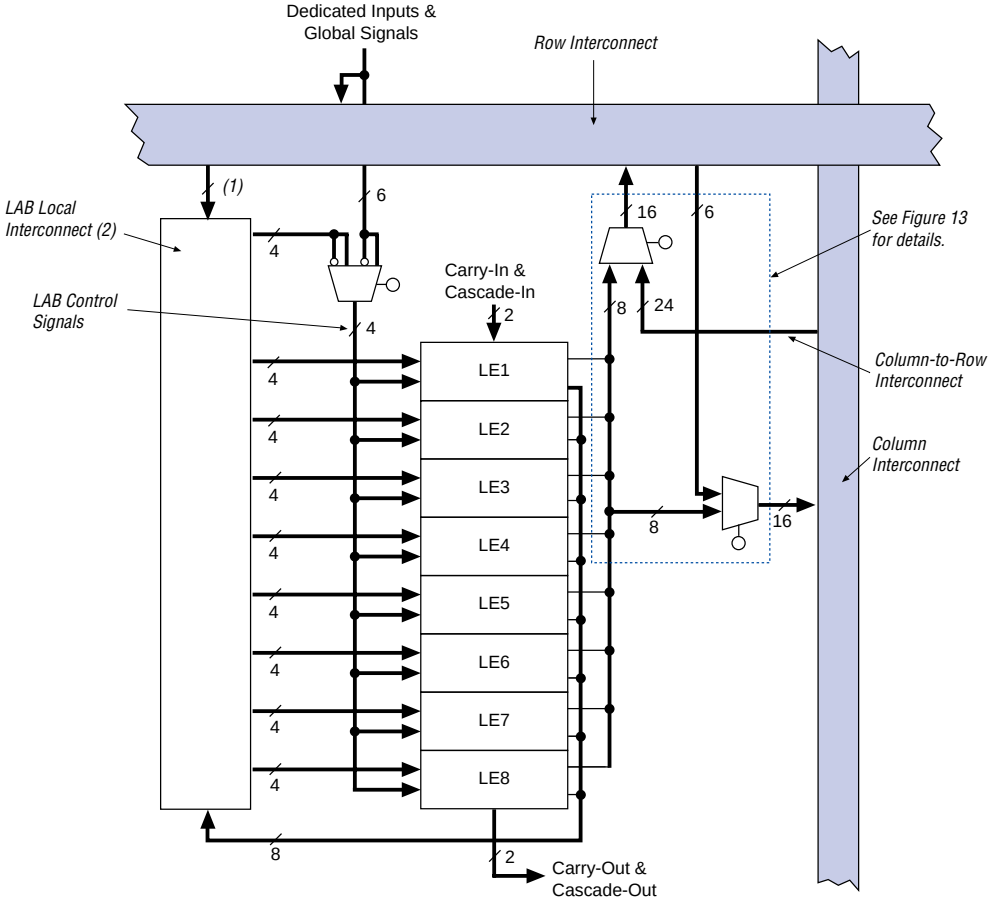

Notes:

(1) EP1K10, EP1K30, and EP1K50 devices have 22 inputs to the LAB local interconnect channel from the row; EP1K100 devices have 26.

(2) EP1K10, EP1K30, and EP1K50 devices have 30 LAB local interconnect channels; EP1K100 devices have 34.

Each LAB provides four control signals with programmable inversion that can be used in all eight LEs. Two of these signals can be used as clocks, the other two can be used for clear / preset control. The LAB clocks can be driven by the dedicated clock input pins, global signals, I / O signals, or internal signals via the LAB local interconnect. The LAB preset and clear control signals can be driven by the global signals, I / O signals, or internal signals via the LAB local interconnect. The global control signals are typically used for global clock, clear, or preset signals because they provide asynchronous control with very low skew across the device. If logic is required on a control signal, it can be generated in one or more LEs in any LAB and driven into the local interconnect of the target LAB. In addition, the global control signals can be generated from LE outputs.

Logic Element

The LE, the smallest unit of logic in the ACEX 1K architecture, has a compact size that provides efficient logic utilization. Each LE contains a 4-input LUT, which is a function generator that can quickly compute any function of four variables. In addition, each LE contains a programmable flipflop with a synchronous clock enable, a carry chain, and a cascade chain. Each LE drives both the local and the FastTrack Interconnect routing structure. Figure 8 shows the ACEX 1K LE.

Figure 8. ACEX 1K Logic Element

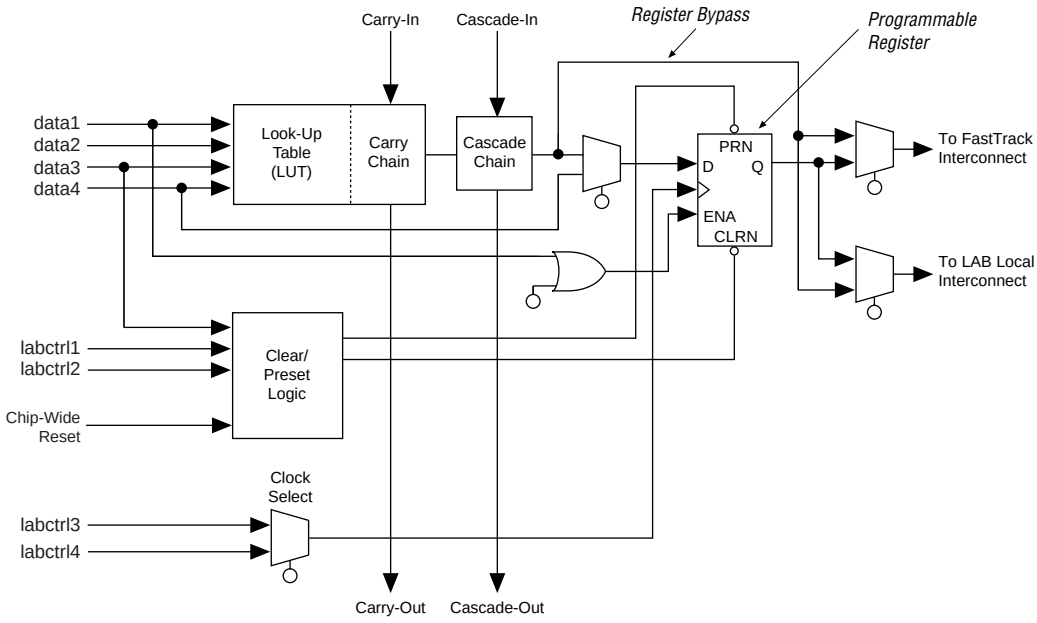

The programmable flipflop in the LE can be configured for D, T, JK, or SR operation. The clock, clear, and preset control signals on the flipflop can be driven by global signals, general-purpose I/O pins, or any internal logic. For combinatorial functions, the flipflop is bypassed and the LUT's output drives the LE's output.

The LE has two outputs that drive the interconnect: one drives the local interconnect, and the other drives either the row or column FastTrack Interconnect routing structure. The two outputs can be controlled independently. For example, the LUT can drive one output while the register drives the other output. This feature, called register packing, can improve LE utilization because the register and the LUT can be used for unrelated functions.

The ACEX 1K architecture provides two types of dedicated high-speed data paths that connect adjacent LEs without using local interconnect paths: carry chains and cascade chains. The carry chain supports high-speed counters and adders, and the cascade chain implements wide-input functions with minimum delay. Carry and cascade chains connect all LEs in a LAB and all LABs in the same row. Intensive use of carry and cascade chains can reduce routing flexibility. Therefore, the use of these chains should be limited to speed-critical portions of a design.

Carry Chain

The carry chain provides a very fast (as low as 0.2 ns) carry-forward function between LEs. The carry-in signal from a lower-order bit drives forward into the higher-order bit via the carry chain, and feeds into both the LUT and the next portion of the carry chain. This feature allows the ACEX 1K architecture to efficiently implement high-speed counters, adders, and comparators of arbitrary width. Carry chain logic can be created automatically by the compiler during design processing, or manually by the designer during design entry. Parameterized functions, such as LPM and DesignWare functions, automatically take advantage of carry chains.

Carry chains longer than eight LEs are automatically implemented by linking LABs together. For enhanced fitting, a long carry chain skips alternate LABs in a row. A carry chain longer than one LAB skips either from even-numbered LAB to even-numbered LAB, or from odd-numbered LAB to odd-numbered LAB. For example, the last LE of the first LAB in a row carries to the first LE of the third LAB in the row. The carry chain does not cross the EAB at the middle of the row. For instance, in the EP1K50 device, the carry chain stops at the eighteenth LAB, and a new carry chain begins at the nineteenth LAB.

Figure 9 shows how an *n*-bit full adder can be implemented in *n* + 1 LEs with the carry chain. One portion of the LUT generates the sum of two bits using the input signals and the carry-in signal; the sum is routed to the output of the LE. The register can be bypassed for simple adders or used for an accumulator function. Another portion of the LUT and the carry chain logic generates the carry-out signal, which is routed directly to the carry-in signal of the next-higher-order bit. The final carry-out signal is routed to an LE, where it can be used as a general-purpose signal.

Figure 9. ACEX 1K Carry Chain Operation (n-Bit Full Adder)

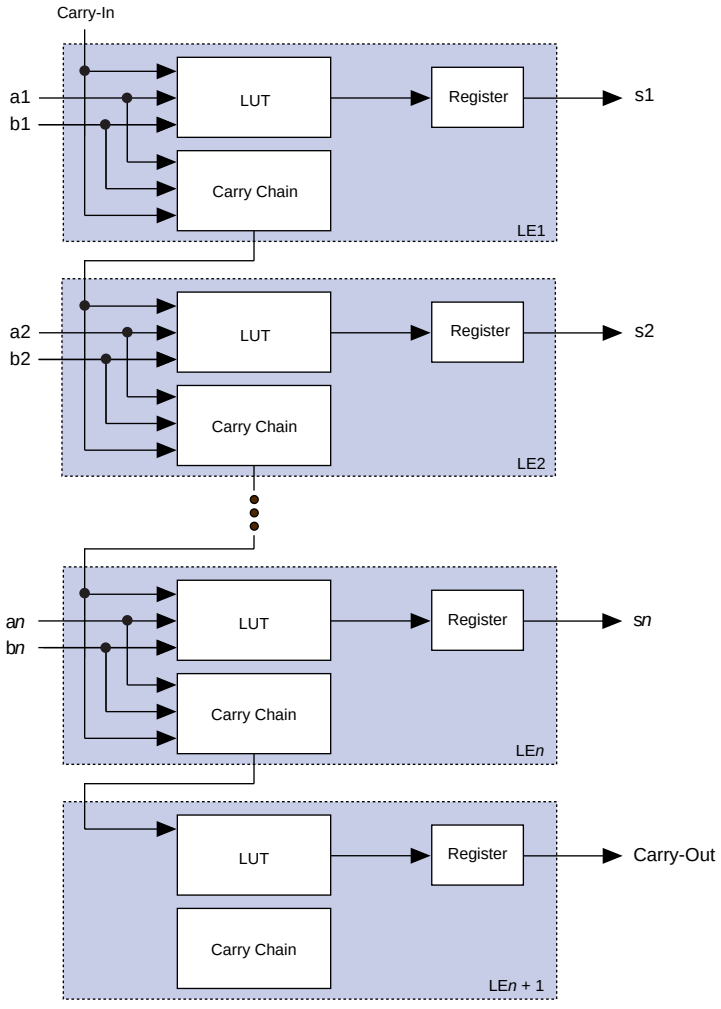

Cascade Chain

With the cascade chain, the ACEX 1K architecture can implement functions that have a very wide fan-in. Adjacent LUTs can be used to compute portions of the function in parallel; the cascade chain serially connects the intermediate values. The cascade chain can use a logical AND or logical OR (via De Morgan's inversion) to connect the outputs of adjacent LEs. With a delay as low as 0.6 ns per LE, each additional LE provides four more inputs to the effective width of a function. Cascade chain logic can be created automatically by the compiler during design processing, or manually by the designer during design entry.

Cascade chains longer than eight bits are implemented automatically by linking several LABs together. For easier routing, a long cascade chain skips every other LAB in a row. A cascade chain longer than one LAB skips either from even-numbered LAB to even-numbered LAB, or from odd-numbered LAB to odd-numbered LAB (e.g., the last LE of the first LAB in a row cascades to the first LE of the third LAB). The cascade chain does not cross the center of the row (e.g., in the EP1K50 device, the cascade chain stops at the eighteenth LAB, and a new one begins at the nineteenth LAB). This break is due to the EAB's placement in the middle of the row.

Figure 10 shows how the cascade function can connect adjacent LEs to form functions with a wide fan-in. These examples show functions of 4*n* variables implemented with *n* LEs. The LE delay is 1.3 ns; the cascade chain delay is 0.6 ns. With the cascade chain, decoding a 16-bit address requires 3.1 ns.

Figure 10. ACEX 1K Cascade Chain Operation

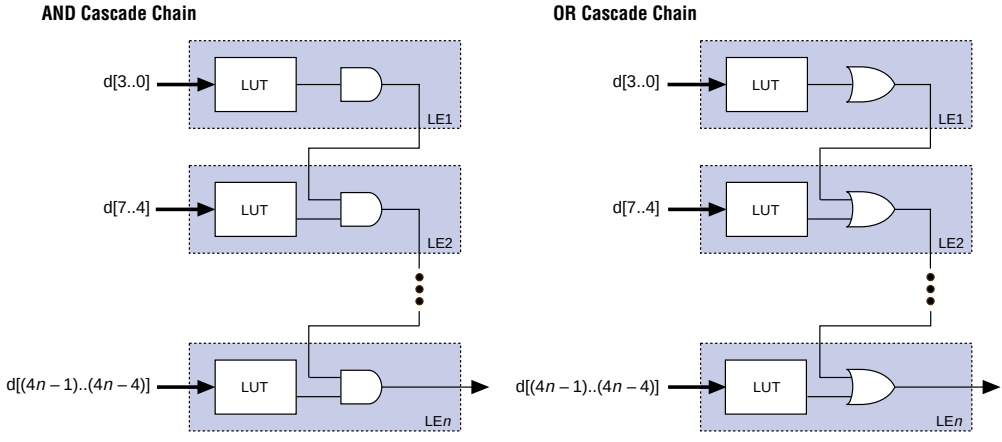

LE Operating Modes

The ACEX 1K LE can operate in the following four modes:

- Normal mode
- Arithmetic mode
- Up / down counter mode
- Clearable counter mode

Each of these modes uses LE resources differently. In each mode, seven available inputs to the LE—the four data inputs from the LAB local interconnect, the feedback from the programmable register, and the carry-in and cascade-in from the previous LE—are directed to different destinations to implement the desired logic function. Three inputs to the LE provide clock, clear, and preset control for the register. The Altera software, in conjunction with parameterized functions such as LPM and DesignWare functions, automatically chooses the appropriate mode for common functions such as counters, adders, and multipliers. If required, the designer can also create special-purpose functions that use a specific LE operating mode for optimal performance.

The architecture provides a synchronous clock enable to the register in all four modes. The Altera software can set DATA1 to enable the register synchronously, providing easy implementation of fully synchronous designs.

Figure 11 shows the ACEX 1K LE operating modes.

Figure 11. ACEX 1K LE Operating Modes

Normal Mode

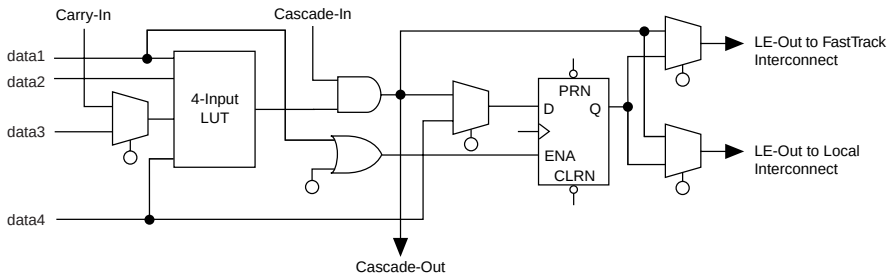

Arithmetic Mode

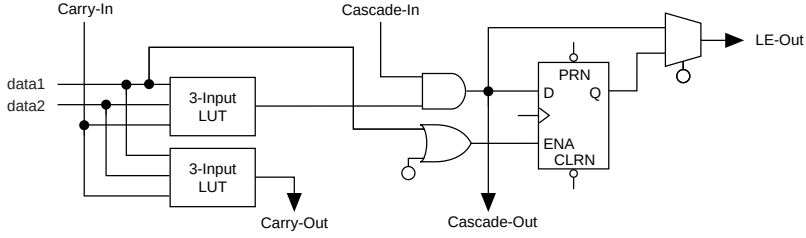

Up/Down Counter Mode

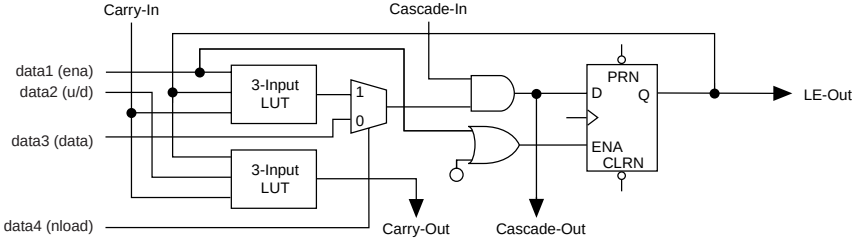

Clearable Counter Mode

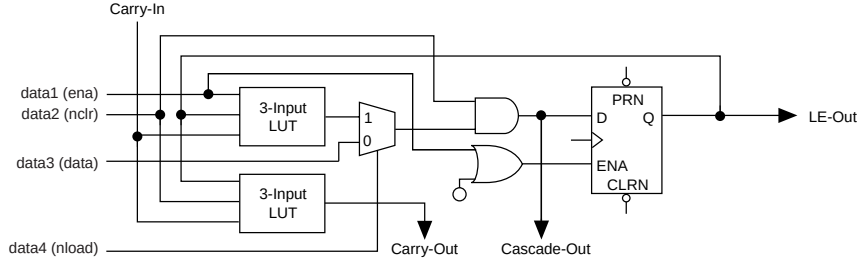

Normal Mode

The normal mode is suitable for general logic applications and wide decoding functions that can take advantage of a cascade chain. In normal mode, four data inputs from the LAB local interconnect and the carry-in are inputs to a 4-input LUT. The compiler automatically selects the carry-in or the DATA3 signal as one of the inputs to the LUT. The LUT output can be combined with the cascade-in signal to form a cascade chain through the cascade-out signal. Either the register or the LUT can be used to drive both the local interconnect and the FastTrack Interconnect routing structure at the same time.

The LUT and the register in the LE can be used independently (register packing). To support register packing, the LE has two outputs; one drives the local interconnect, and the other drives the FastTrack Interconnect routing structure. The DATA4 signal can drive the register directly, allowing the LUT to compute a function that is independent of the registered signal; a 3-input function can be computed in the LUT, and a fourth independent signal can be registered. Alternatively, a 4-input function can be generated, and one of the inputs to this function can be used to drive the register. The register in a packed LE can still use the clock enable, clear, and preset signals in the LE. In a packed LE, the register can drive the FastTrack Interconnect routing structure while the LUT drives the local interconnect, or vice versa.

Arithmetic Mode

The arithmetic mode offers two 3-input LUTs that are ideal for implementing adders, accumulators, and comparators. One LUT computes a 3-input function; the other generates a carry output. As shown in Figure 11, the first LUT uses the carry-in signal and two data inputs from the LAB local interconnect to generate a combinatorial or registered output. For example, in an adder, this output is the sum of three signals: a, b, and carry-in. The second LUT uses the same three signals to generate a carry-out signal, thereby creating a carry chain. The arithmetic mode also supports simultaneous use of the cascade chain.

Up/Down Counter Mode

The up / down counter mode offers counter enable, clock enable, synchronous up / down control, and data loading options. These control signals are generated by the data inputs from the LAB local interconnect, the carry-in signal, and output feedback from the programmable register. Two 3-input LUTs are used; one generates the counter data, and the other generates the fast carry bit. A 2-to-1 multiplexer provides synchronous loading. Data can also be loaded asynchronously with the clear and preset register control signals without using the LUT resources.

Clearable Counter Mode

The clearable counter mode is similar to the up / down counter mode, but it supports a synchronous clear instead of the up / down control. The clear function is substituted for the cascade-in signal in the up / down counter mode. Two 3-input LUTs are used; one generates the counter data, and the other generates the fast carry bit. Synchronous loading is provided by a 2-to-1 multiplexer. The output of this multiplexer is ANDed with a synchronous clear signal.

Internal Tri-State Emulation

Internal tri-state emulation provides internal tri-states without the limitations of a physical tri-state bus. In a physical tri-state bus, the tri-state buffers' output enable (OE) signals select which signal drives the bus. However, if multiple OE signals are active, contending signals can be driven onto the bus. Conversely, if no OE signals are active, the bus will float. Internal tri-state emulation resolves contending tri-state buffers to a low value and floating buses to a high value, thereby eliminating these problems. The Altera software automatically implements tri-state bus functionality with a multiplexer.

Clear & Preset Logic Control

Logic for the programmable register's clear and preset functions is controlled by the DATA3, LABCTRL1, and LABCTRL2 inputs to the LE. The clear and preset control structure of the LE asynchronously loads signals into a register. Either LABCTRL1 or LABCTRL2 can control the asynchronous clear. Alternatively, the register can be set up so that LABCTRL1 implements an asynchronous load. The data to be loaded is driven to DATA3; when LABCTRL1 is asserted, DATA3 is loaded into the register.

During compilation, the compiler automatically selects the best control signal implementation. Because the clear and preset functions are active-low, the Compiler automatically assigns a logic high to an unused clear or preset.

The clear and preset logic is implemented in one of the following six modes chosen during design entry:

- Asynchronous clear
- Asynchronous preset
- Asynchronous clear and preset
- Asynchronous load with clear
- Asynchronous load with preset
- Asynchronous load without clear or preset

In addition to the six clear and preset modes, ACEX 1K devices provide a chip-wide reset pin that can reset all registers in the device. Use of this feature is set during design entry. In any of the clear and preset modes, the chip-wide reset overrides all other signals. Registers with asynchronous presets may be preset when the chip-wide reset is asserted. Inversion can be used to implement the asynchronous preset. Figure 12 shows examples of how to setup the preset and clear inputs for the desired functionality.

Figure 12. ACEX 1K LE Clear & Preset Modes

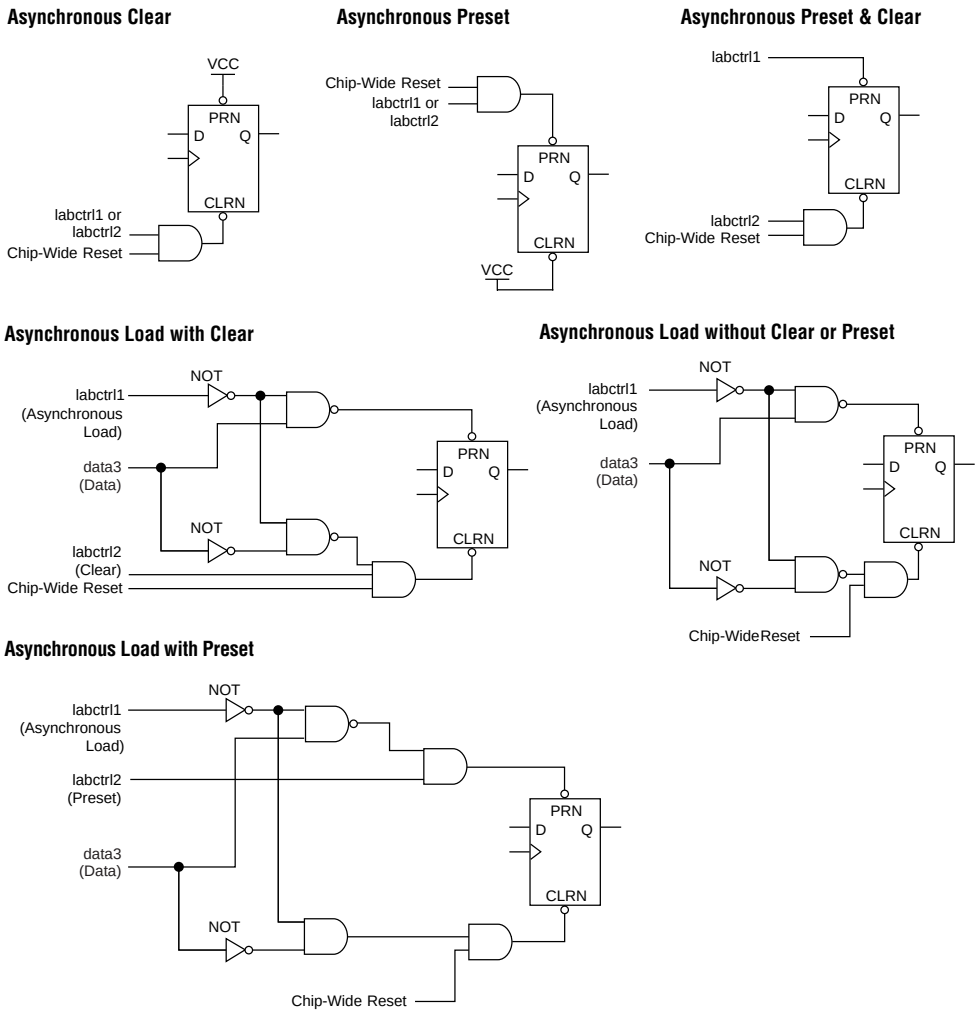

Asynchronous Clear

The flipflop can be cleared by either LABCTRL1 or LABCTRL2. In this mode, the preset signal is tied to VCC to deactivate it.

Asynchronous Preset

An asynchronous preset is implemented as an asynchronous load, or with an asynchronous clear. If DATA3 is tied to VCC, asserting LABCTRL1 asynchronously loads a one into the register. Alternatively, the Altera software can provide preset control by using the clear and inverting the register's input and output. Inversion control is available for the inputs to both LEs and IOEs. Therefore, if a register is preset by only one of the two LABCTRL signals, the DATA3 input is not needed and can be used for one of the LE operating modes.

Asynchronous Preset & Clear

When implementing asynchronous clear and preset, LABCTRL1 controls the preset, and LABCTRL2 controls the clear. DATA3 is tied to VCC, so that asserting LABCTRL1 asynchronously loads a one into the register, effectively presetting the register. Asserting LABCTRL2 clears the register.

Asynchronous Load with Clear

When implementing an asynchronous load in conjunction with the clear, LABCTRL1 implements the asynchronous load of DATA3 by controlling the register preset and clear. LABCTRL2 implements the clear by controlling the register clear; LABCTRL2 does not have to feed the preset circuits.

Asynchronous Load with Preset

When implementing an asynchronous load in conjunction with preset, the Altera software provides preset control by using the clear and inverting the input and output of the register. Asserting LABCTRL2 presets the register, while asserting LABCTRL1 loads the register. The Altera software inverts the signal that drives DATA3 to account for the inversion of the register's output.

Asynchronous Load without Preset or Clear

When implementing an asynchronous load without preset or clear, LABCTRL1 implements the asynchronous load of DATA3 by controlling the register preset and clear.

FastTrack Interconnect Routing Structure

In the ACEX 1K architecture, connections between LEs, EABs, and device I/O pins are provided by the FastTrack Interconnect routing structure, which is a series of continuous horizontal and vertical routing channels that traverse the device. This global routing structure provides predictable performance, even in complex designs. In contrast, the segmented routing in FPGAs requires switch matrices to connect a variable number of routing paths, increasing the delays between logic resources and reducing performance.

The FastTrack Interconnect routing structure consists of row and column interconnect channels that span the entire device. Each row of LABs is served by a dedicated row interconnect. The row interconnect can drive I/O pins and feed other LABs in the row. The column interconnect routes signals between rows and can drive I/O pins.

Row channels drive into the LAB or EAB local interconnect. The row signal is buffered at every LAB or EAB to reduce the effect of fan-out on delay. A row channel can be driven by an LE or by one of three column channels. These four signals feed dual 4-to-1 multiplexers that connect to two specific row channels. These multiplexers, which are connected to each LE, allow column channels to drive row channels even when all eight LEs in a LAB drive the row interconnect.

Each column of LABs or EABs is served by a dedicated column interconnect. The column interconnect that serves the EABs has twice as many channels as other column interconnects. The column interconnect can then drive I/O pins or another row's interconnect to route the signals to other LABs or EABs in the device. A signal from the column interconnect, which can be either the output of a LE or an input from an I/O pin, must be routed to the row interconnect before it can enter a LAB or EAB. Each row channel that is driven by an IOE or EAB can drive one specific column channel.

Access to row and column channels can be switched between LEs in adjacent pairs of LABs. For example, a LE in one LAB can drive the row and column channels normally driven by a particular LE in the adjacent LAB in the same row, and vice versa. This flexibility enables routing resources to be used more efficiently. Figure 13 shows the ACEX 1K LAB.

Figure 13. ACEX 1K LAB Connections to Row & Column Interconnect

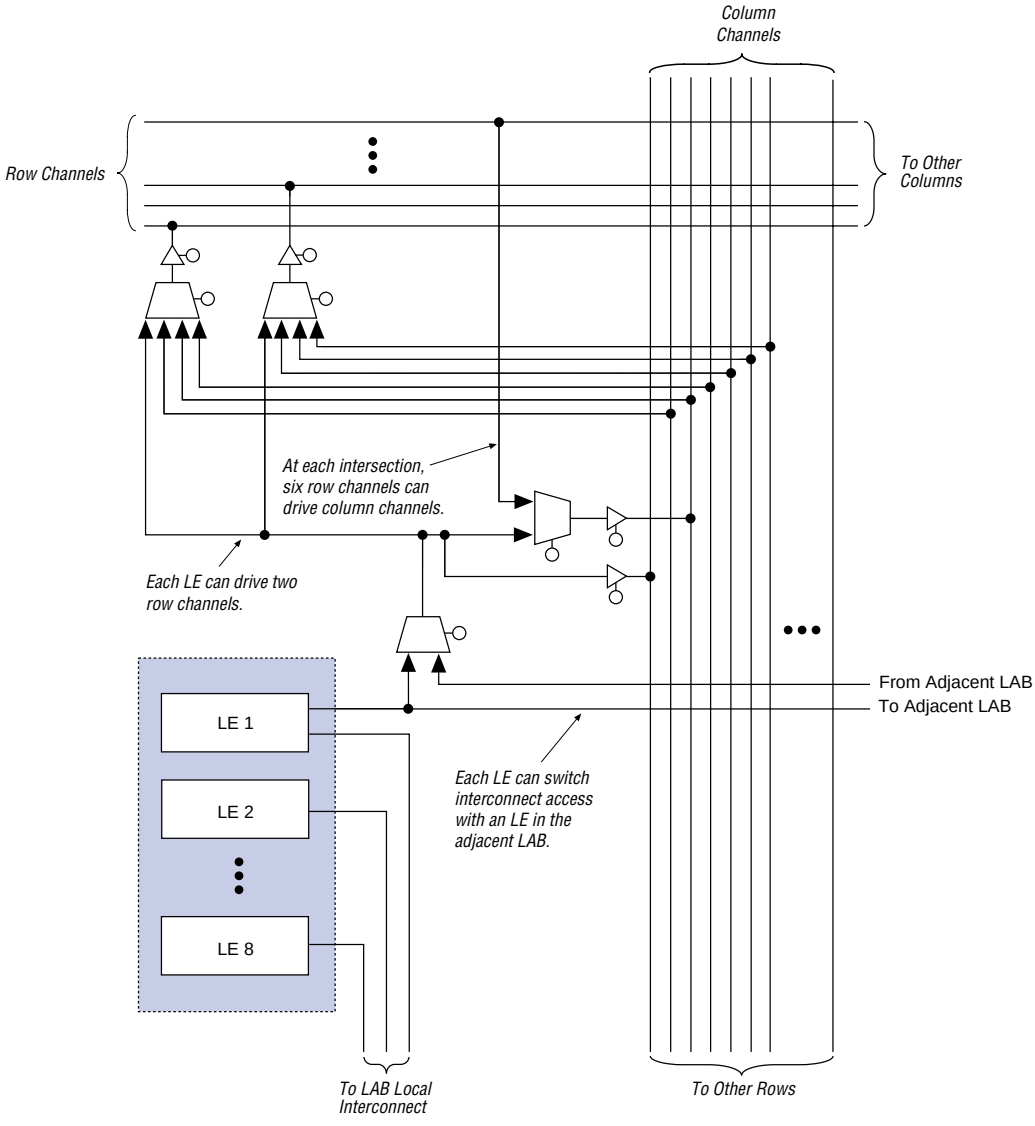

For improved routing, the row interconnect consists of a combination of full-length and half-length channels. The full-length channels connect to all LABs in a row; the half-length channels connect to the LABs in half of the row. The EAB can be driven by the half-length channels in the left half of the row and by the full-length channels. The EAB drives out to the full-length channels. In addition to providing a predictable, row-wide interconnect, this architecture provides increased routing resources. Two neighboring LABs can be connected using a half-row channel, thereby saving the other half of the channel for the other half of the row.

Table 6 summarizes the FastTrack Interconnect routing structure resources available in each ACEX 1K device.

Table 6. ACEX 1K FastTrack Interconnect Resources

Device	Rows	Channels per Row	Columns	Channels per Column
EP1K10	3	144	24	24
EP1K30	6	216	36	24
EP1K50	10	216	36	24
EP1K100	12	312	52	24

In addition to general-purpose I/O pins, ACEX 1K devices have six dedicated input pins that provide low-skew signal distribution across the device. These six inputs can be used for global clock, clear, preset, and peripheral output-enable and clock-enable control signals. These signals are available as control signals for all LABs and IOEs in the device. The dedicated inputs can also be used as general-purpose data inputs because they can feed the local interconnect of each LAB in the device.

Figure 14 shows the interconnection of adjacent LABs and EABs, with row, column, and local interconnects, as well as the associated cascade and carry chains. Each LAB is labeled according to its location: a letter represents the row and a number represents the column. For example, LAB B3 is in row B, column 3.

Figure 14. ACEX 1K Interconnect Resources

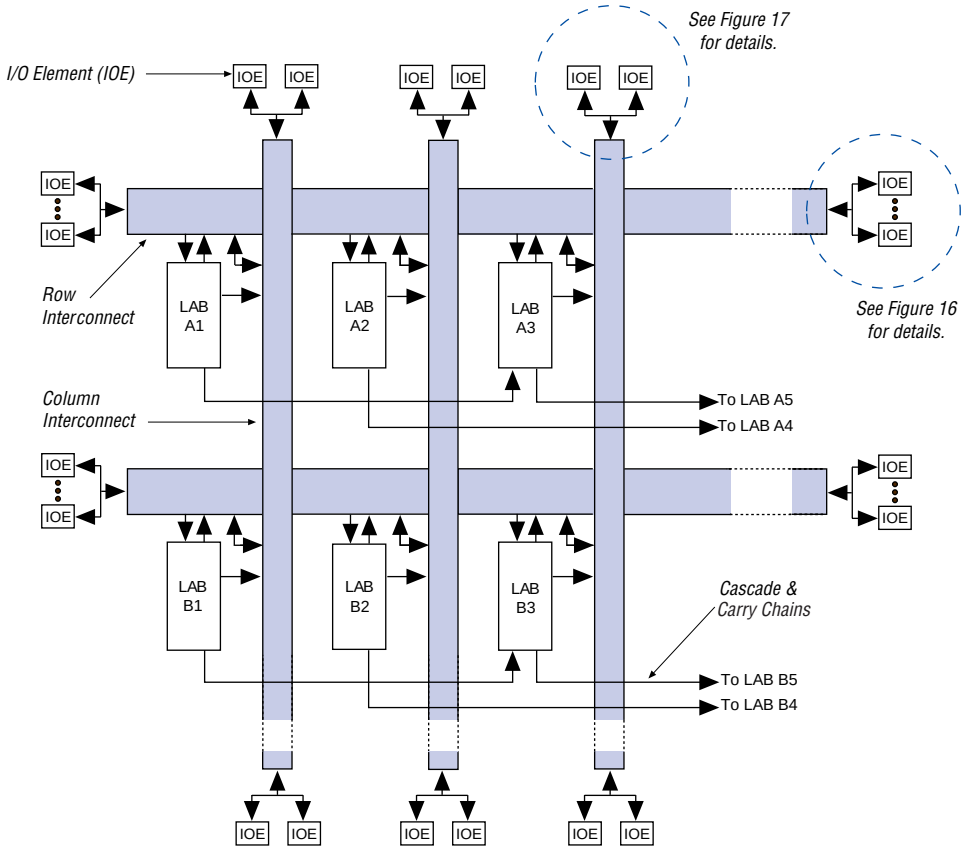

I/O Element

An IOE contains a bidirectional I/O buffer and a register that can be used either as an input register for external data that requires a fast setup time or as an output register for data that requires fast clock-to-output performance. In some cases, using an LE register for an input register will result in a faster setup time than using an IOE register. IOEs can be used as input, output, or bidirectional pins. The compiler uses the programmable inversion option to invert signals from the row and column interconnect automatically where appropriate. For bidirectional registered I/O implementation, the output register should be in the IOE and the data input and output enable registers should be LE registers placed adjacent to the bidirectional pin. Figure 15 shows the bidirectional I/O registers.

Figure 15. ACEX 1K Bidirectional I/O Registers

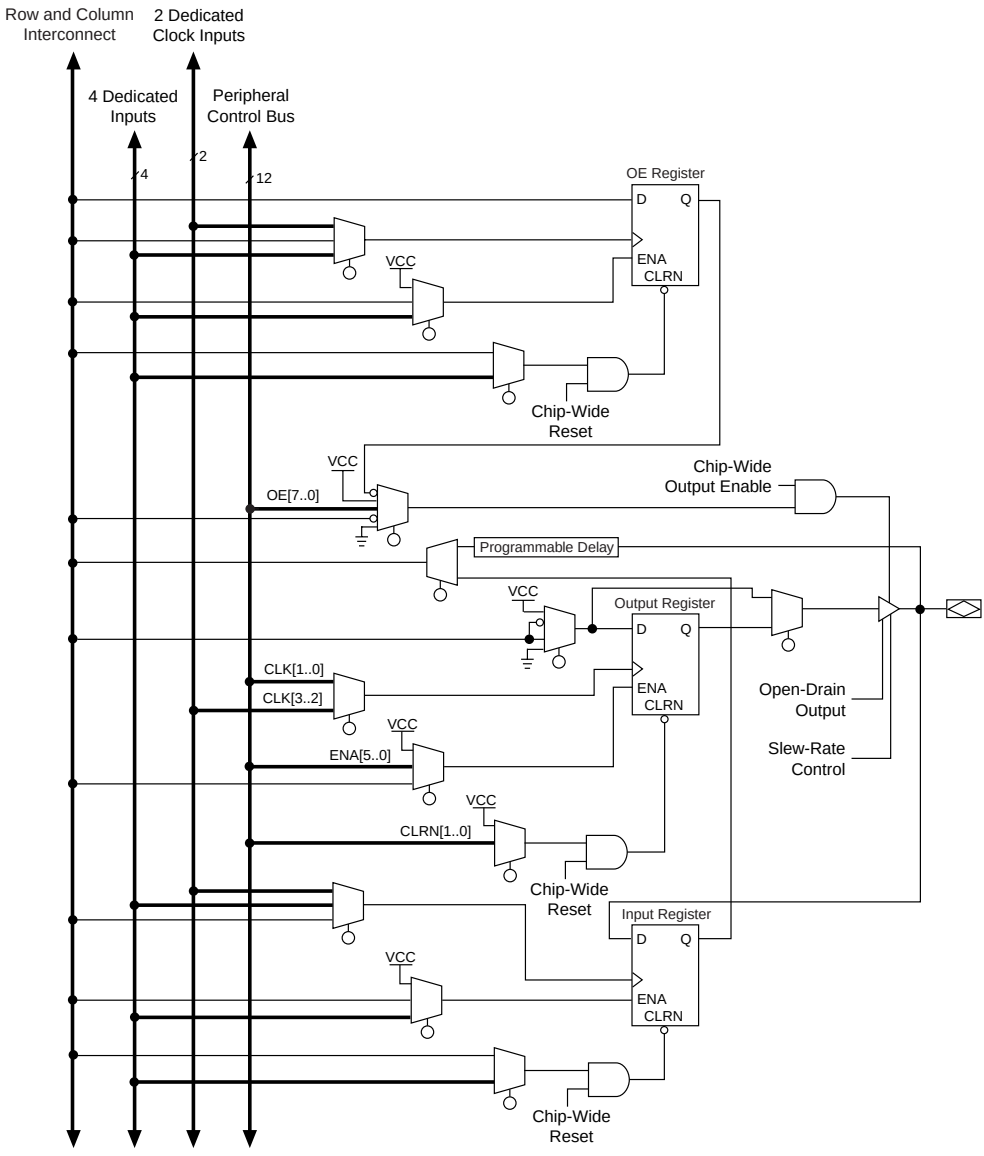

On all ACEX 1K devices, the input path from the I/O pad to the FastTrack Interconnect has a programmable delay element that can be used to guarantee a zero hold time. Depending on the placement of the IOE relative to what it is driving, the designer may choose to turn on the programmable delay to ensure a zero hold time or turn it off to minimize setup time. This feature is used to reduce setup time for complex pin-to-register paths (e.g., PCI designs).

Each IOE selects the clock, clear, clock enable, and output enable controls from a network of I/O control signals called the peripheral control bus. The peripheral control bus uses high-speed drivers to minimize signal skew across devices and provides up to 12 peripheral control signals that can be allocated as follows:

- Up to eight output enable signals
- Up to six clock enable signals
- Up to two clock signals
- Up to two clear signals

If more than six clock-enable or eight output-enable signals are required, each IOE on the device can be controlled by clock enable and output enable signals driven by specific LEs. In addition to the two clock signals available on the peripheral control bus, each IOE can use one of two dedicated clock pins. Each peripheral control signal can be driven by any of the dedicated input pins or the first LE of each LAB in a particular row. In addition, a LE in a different row can drive a column interconnect, which causes a row interconnect to drive the peripheral control signal. The chip-wide reset signal resets all IOE registers, overriding any other control signals.

When a dedicated clock pin drives IOE registers, it can be inverted for all IOEs in the device. All IOEs must use the same sense of the clock. For example, if any IOE uses the inverted clock, all IOEs must use the inverted clock, and no IOE can use the non-inverted clock. However, LEs can still use the true or complement of the clock on an LAB-by-LAB basis.

The incoming signal may be inverted at the dedicated clock pin and will drive all IOEs. For the true and complement of a clock to be used to drive IOEs, drive it into both global clock pins. One global clock pin will supply the true, and the other will supply the complement.

When the true and complement of a dedicated input drives IOE clocks, two signals on the peripheral control bus are consumed, one for each sense of the clock.

When dedicated inputs drive non-inverted and inverted peripheral clears, clock enables, and output enables, two signals on the peripheral control bus will be used.

Table 7 lists the sources for each peripheral control signal and shows how the output enable, clock enable, clock, and clear signals share 12 peripheral control signals. Table 7 also shows the rows that can drive global signals.

Table 7. Peripheral Bus Sources for ACEX Devices

Peripheral Control Signal	EP1K10	EP1K30	EP1K50	EP1K100
OE0	Row A	Row A	Row A	Row A
OE1	Row A	Row B	Row B	Row C
OE2	Row B	Row C	Row D	Row E
OE3	Row B	Row D	Row F	Row L
OE4	Row C	Row E	Row H	Row I
OE5	Row C	Row F	Row J	Row K
CLKENA0/CLK0/GLOBAL0	Row A	Row A	Row A	Row F
CLKENA1/OE6/GLOBAL1	Row A	Row B	Row C	Row D
CLKENA2/CLR0	Row B	Row C	Row E	Row B
CLKENA3/OE7/GLOBAL2	Row B	Row D	Row G	Row H
CLKENA4/CLR1	Row C	Row E	Row I	Row J
CLKENA5/CLK1/GLOBAL3	Row C	Row F	Row J	Row G

Signals on the peripheral control bus can also drive the four global signals, referred to as GLOBAL0 through GLOBAL3. An internally generated signal can drive a global signal, providing the same low-skew, low-delay characteristics as a signal driven by an input pin. An LE drives the global signal by driving a row line that drives the peripheral bus which then drives the global signal. This feature is ideal for internally generated clear or clock signals with high fan-out. However, internally driven global signals offer no advantage over the general-purpose interconnect for routing data signals.

The chip-wide output enable pin is an active-high pin that can be used to tri-state all pins on the device. This option can be set in the Altera software. The built-in I/O pin pull-up resistors (which are active during configuration) are active when the chip-wide output enable pin is asserted. The registers in the IOE can also be reset by the chip-wide reset pin.

Row-to-IOE Connections

When an IOE is used as an input signal, it can drive two separate row channels. The signal is accessible by all LEs within that row. When an IOE is used as an output, the signal is driven by a multiplexer that selects a signal from the row channels. Up to eight IOEs connect to each side of each row channel (see Figure 16).

Figure 16. ACEX 1K Row-to-IOE Connections *Note (1)*

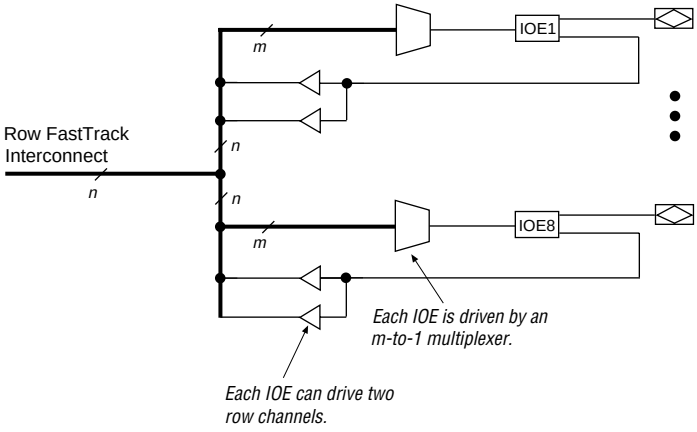

Note:
(1) The values for *m* and *n* are shown in Table 8.

Table 8 lists the ACEX 1K row-to-IOE interconnect resources.

Table 8. ACEX 1K Row-to-IOE Interconnect Resources

Device	Channels per Row *(n)*	Row Channels per Pin *(m)*
EP1K10	144	18
EP1K30	216	27
EP1K50	216	27
EP1K100	312	39

Column-to-IOE Connections

When an IOE is used as an input, it can drive up to two separate column channels. When an IOE is used as an output, the signal is driven by a multiplexer that selects a signal from the column channels. Two IOEs connect to each side of the column channels. Each IOE can be driven by column channels via a multiplexer. The set of column channels is different for each IOE (see Figure 17).

Figure 17. ACEX 1K Column-to-IOE Connections *Note (1)*

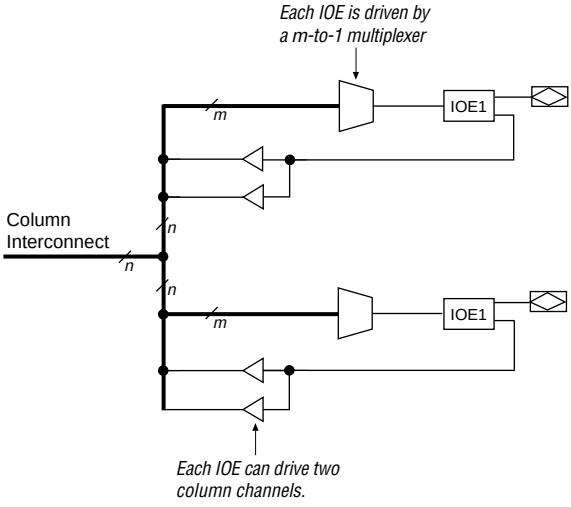

Note:
(1) The values for *m* and *n* are shown in Table 9.

Table 9 lists the ACEX 1K column-to-IOE interconnect resources.

Table 9. ACEX 1K Column-to-IOE Interconnect Resources

Device	Channels per Column *(n)*	Column Channels per Pin *(m)*
EP1K10	24	16
EP1K30	24	16
EP1K50	24	16
EP1K100	24	16

SameFrame Pin-Outs

ACEX 1K devices support the SameFrame pin-out feature for FineLine BGA packages. The SameFrame pin-out feature is the arrangement of balls on FineLine BGA packages such that the lower-ball-count packages form a subset of the higher-ball-count packages. SameFrame pin-outs provide the flexibility to migrate not only from device to device within the same package, but also from one package to another. A given printed circuit board (PCB) layout can support multiple device density / package combinations. For example, a single board layout can support a range of devices from an EP1K10 device in a 256-pin FineLine BGA package to an EP1K100 device in a 484-pin FineLine BGA package.

The Altera software provides support to design PCBs with SameFrame pin-out devices. Devices can be defined for present and future use. The Altera software generates pin-outs describing how to lay out a board that takes advantage of this migration. Figure 18 shows an example of SameFrame pin-out.

Figure 18. SameFrame Pin-Out Example

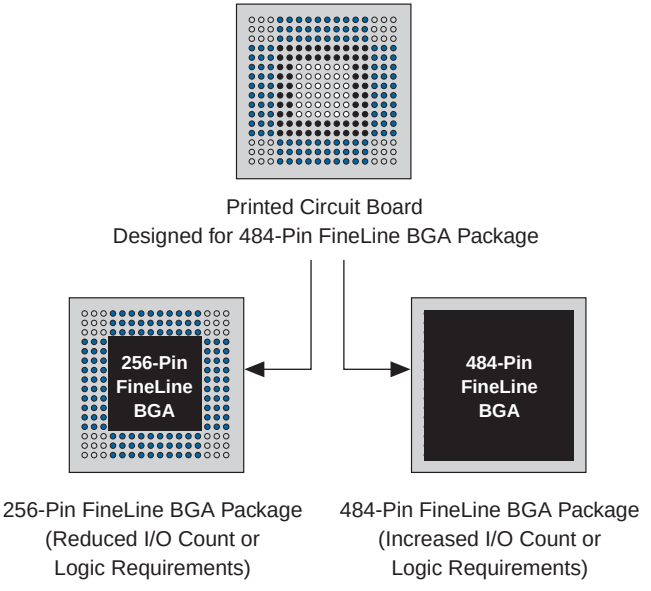

Table 10 shows the ACEX 1K device / package combinations that support SameFrame pin-outs for ACEX 1K devices. All FineLine BGA packages support SameFrame pin-outs, providing the flexibility to migrate not only from device to device within the same package, but also from one package to another. The I / O count will vary from device to device.

For more information, search for “SameFrame” in MAX+PLUS II Help.

Table 10. ACEX 1K SameFrame Pin-Out Support

Device	256-Pin FineLine BGA	484-Pin FineLine BGA
EP1K10	✓	*(1)*
EP1K30	✓	*(1)*
EP1K50	✓	✓
EP1K100	✓	✓

Note:
(1) This option is supported with a 256-pin FineLine BGA package and SameFrame migration.

ClockLock & ClockBoost Features

To support high-speed designs, -1 and -2 speed grade ACEX 1K devices offer ClockLock and ClockBoost circuitry containing a phase-locked loop (PLL) that is used to increase design speed and reduce resource usage. The ClockLock circuitry uses a synchronizing PLL that reduces the clock delay and skew within a device. This reduction minimizes clock-to-output and setup times while maintaining zero hold times. The ClockBoost circuitry, which provides a clock multiplier, allows the designer to enhance device area efficiency by sharing resources within the device. The ClockBoost feature allows the designer to distribute a low-speed clock and multiply that clock on-device. Combined, the ClockLock and ClockBoost features provide significant improvements in system performance and bandwidth.

The ClockLock and ClockBoost features in ACEX 1K devices are enabled through the Altera software. External devices are not required to use these features. The output of the ClockLock and ClockBoost circuits is not available at any of the device pins.

The ClockLock and ClockBoost circuitry lock onto the rising edge of the incoming clock. The circuit output can drive the clock inputs of registers only; the generated clock cannot be gated or inverted.

The dedicated clock pin (`GCLK1`) supplies the clock to the ClockLock and ClockBoost circuitry. When the dedicated clock pin is driving the ClockLock or ClockBoost circuitry, it cannot drive elsewhere in the device.

For designs that require both a multiplied and non-multiplied clock, the clock trace on the board can be connected to the `GCLK1` pin. In the Altera software, the `GCLK1` pin can feed both the ClockLock and ClockBoost circuitry in the ACEX 1K device. However, when both circuits are used, the other clock pin cannot be used.

ClockLock & ClockBoost Timing Parameters

For the ClockLock and ClockBoost circuitry to function properly, the incoming clock must meet certain requirements. If these specifications are not met, the circuitry may not lock onto the incoming clock, which generates an erroneous clock within the device. The clock generated by the ClockLock and ClockBoost circuitry must also meet certain specifications. If the incoming clock meets these requirements during configuration, the ClockLock and ClockBoost circuitry will lock onto the clock during configuration. The circuit will be ready for use immediately after configuration. Figure 19 shows the incoming and generated clock specifications.

Figure 19. Specifications for the Incoming & Generated Clocks *Note (1)*

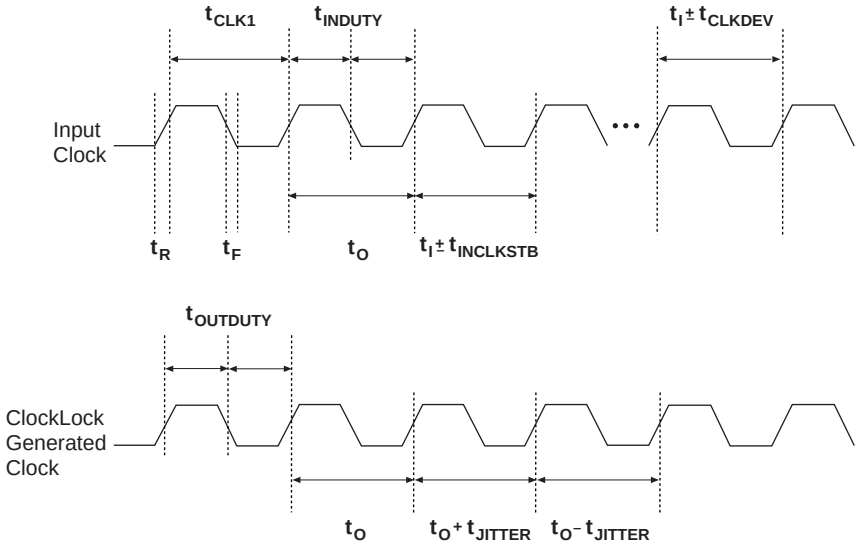

Note:

(1) The t_I parameter refers to the nominal input clock period; the t_O parameter refers to the nominal output clock period.

Tables 11 and 12 summarize the ClockLock and ClockBoost parameters for -1 and -2 speed-grade devices, respectively.

Table 11. ClockLock & ClockBoost Parameters for -1 Speed-Grade Devices

Symbol	Parameter	Condition	Min	Typ	Max	Unit
t_R	Input rise time				5	ns
t_F	Input fall time				5	ns
t_{INDUTY}	Input duty cycle		40		60	%
f_{CLK1}	Input clock frequency (ClockBoost clock multiplication factor equals 1)		25		180	MHz
f_{CLK2}	Input clock frequency (ClockBoost clock multiplication factor equals 2)		16		90	MHz
f_{CLKDEV}	Input deviation from user specification in the Altera software *(1)*				25,000 *(2)*	PPM
$t_{INCLKSTB}$	Input clock stability (measured between adjacent clocks)				100	ps
t_{LOCK}	Time required for ClockLock or ClockBoost to acquire lock *(3)*				10	µs
t_{JITTER}	Jitter on ClockLock or ClockBoost-generated clock *(4)*	$t_{INCLKSTB}$ <100			250 *(4)*	ps
		$t_{INCLKSTB}$ < 50			200 *(4)*	ps
$t_{OUTDUTY}$	Duty cycle for ClockLock or ClockBoost-generated clock		40	50	60	%

Table 12. ClockLock & ClockBoost Parameters for -2 Speed-Grade Devices

Symbol	Parameter	Condition	Min	Typ	Max	Unit
t_R	Input rise time				5	ns
t_F	Input fall time				5	ns
t_{INDUTY}	Input duty cycle		40		60	%
f_{CLK1}	Input clock frequency (ClockBoost clock multiplication factor equals 1)		25		80	MHz
f_{CLK2}	Input clock frequency (ClockBoost clock multiplication factor equals 2)		16		40	MHz
f_{CLKDEV}	Input deviation from user specification in the software *(1)*				25,000	PPM
$t_{INCLKSTB}$	Input clock stability (measured between adjacent clocks)				100	ps
t_{LOCK}	Time required for ClockLock or ClockBoost to acquire lock *(3)*				10	µs
t_{JITTER}	Jitter on ClockLock or ClockBoost-generated clock *(4)*	$t_{INCLKSTB}$ < 100			250 *(4)*	ps
		$t_{INCLKSTB}$ < 50			200 *(4)*	ps
$t_{OUTDUTY}$	Duty cycle for ClockLock or ClockBoost-generated clock		40	50	60	%

Notes to tables:

(1) To implement the ClockLock and ClockBoost circuitry with the Altera software, designers must specify the input frequency. The Altera software tunes the PLL in the ClockLock and ClockBoost circuitry to this frequency. The f_{CLKDEV} parameter specifies how much the incoming clock can differ from the specified frequency during device operation. Simulation does not reflect this parameter.

(2) Twenty-five thousand parts per million (PPM) equates to 2.5% of input clock period.

(3) During device configuration, the ClockLock and ClockBoost circuitry is configured before the rest of the device. If the incoming clock is supplied during configuration, the ClockLock and ClockBoost circuitry locks during configuration because the t_{LOCK} value is less than the time required for configuration.

(4) The t_{JITTER} specification is measured under long-term observation. The maximum value for t_{JITTER} is 200 ps if $t_{INCLKSTB}$ is lower than 50 ps.

I/O Configuration

This section discusses the PCI pull-up clamping diode option, slew-rate control, open-drain output option, and MultiVolt I/O interface for ACEX 1K devices. The PCI pull-up clamping diode, slew-rate control, and open-drain output options are controlled pin-by-pin via Altera software logic options. The MultiVolt I/O interface is controlled by connecting V_{CCIO} to a different voltage than V_{CCINT}. Its effect can be simulated in the Altera software via the **Global Project Device Options** dialog box (Assign menu).

PCI Pull-Up Clamping Diode Option

ACEX 1K devices have a pull-up clamping diode on every I/O, dedicated input, and dedicated clock pin. PCI clamping diodes clamp the signal to the V_{CCIO} value and are required for 3.3-V PCI compliance. Clamping diodes can also be used to limit overshoot in other systems.

Clamping diodes are controlled on a pin-by-pin basis. When V_{CCIO} is 3.3 V, a pin that has the clamping diode option turned on can be driven by a 2.5-V or 3.3-V signal, but not a 5.0-V signal. When V_{CCIO} is 2.5 V, a pin that has the clamping diode option turned on can be driven by a 2.5-V signal, but not a 3.3-V or 5.0-V signal. Additionally, a clamping diode can be activated for a subset of pins, which allows a device to bridge between a 3.3-V PCI bus and a 5.0-V device.

Slew-Rate Control

The output buffer in each IOE has an adjustable output slew rate that can be configured for low-noise or high-speed performance. A slower slew rate reduces system noise and adds a maximum delay of 4.3 ns. The fast slew rate should be used for speed-critical outputs in systems that are adequately protected against noise. Designers can specify the slew rate pin-by-pin or assign a default slew rate to all pins on a device-wide basis. The slow slew rate setting affects only the falling edge of the output.

Open-Drain Output Option

ACEX 1K devices provide an optional open-drain output (electrically equivalent to open-collector output) for each I/O pin. This open-drain output enables the device to provide system-level control signals (e.g., interrupt and write enable signals) that can be asserted by any of several devices. It can also provide an additional wired-`OR` plane.

MultiVolt I/O Interface

The ACEX 1K device architecture supports the MultiVolt I/O interface feature, which allows ACEX 1K devices in all packages to interface with systems of differing supply voltages. These devices have one set of V_{CC} pins for internal operation and input buffers (`VCCINT`), and another set for I/O output drivers (`VCCIO`).

The VCCINT pins must always be connected to a 2.5-V power supply. With a 2.5-V V_{CCINT} level, input voltages are compatible with 2.5-V, 3.3-V, and 5.0-V inputs. The VCCIO pins can be connected to either a 2.5-V or 3.3-V power supply, depending on the output requirements. When the VCCIO pins are connected to a 2.5-V power supply, the output levels are compatible with 2.5-V systems. When the VCCIO pins are connected to a 3.3-V power supply, the output high is at 3.3 V and is therefore compatible with 3.3-V or 5.0-V systems. Devices operating with V_{CCIO} levels higher than 3.0 V achieve a faster timing delay of t_{OD2} instead of t_{OD1}.

Table 13 summarizes ACEX 1K MultiVolt I/O support.

Table 13. ACEX 1K MultiVolt I/O Support

V_{CCIO} (V)	Input Signal (V)			Output Signal (V)		
	2.5	3.3	5.0	2.5	3.3	5.0
2.5	✓	✓ (1)	✓ (1)	✓		
3.3	✓	✓	✓ (1)	✓ (2)	✓	✓

Notes:

(1) The PCI clamping diode must be disabled on an input which is driven with a voltage higher than V_{CCIO}.

(2) When V_{CCIO} = 3.3 V, an ACEX 1K device can drive a 2.5-V device that has 3.3-V tolerant inputs.

Open-drain output pins on ACEX 1K devices (with a pull-up resistor to the 5.0-V supply) can drive 5.0-V CMOS input pins that require a higher V_{IH} than LVTTL. When the open-drain pin is active, it will drive low. When the pin is inactive, the resistor will pull up the trace to 5.0 V, thereby meeting the CMOS V_{OH} requirement. The open-drain pin will only drive low or tri-state; it will never drive high. The rise time is dependent on the value of the pull-up resistor and load impedance. The I_{OL} current specification should be considered when selecting a pull-up resistor.

Power Sequencing & Hot-Socketing

Because ACEX 1K devices can be used in a mixed-voltage environment, they have been designed specifically to tolerate any possible power-up sequence. The V_{CCIO} and V_{CCINT} power planes can be powered in any order.

Signals can be driven into ACEX 1K devices before and during power up without damaging the device. Additionally, ACEX 1K devices do not drive out during power up. Once operating conditions are reached, ACEX 1K devices operate as specified by the user.

IEEE Std. 1149.1 (JTAG) Boundary-Scan Support

All ACEX 1K devices provide JTAG BST circuitry that complies with the IEEE Std. 1149.1-1990 specification. ACEX 1K devices can also be configured using the JTAG pins through the ByteBlasterMV or BitBlaster download cable, or via hardware that uses the Jam™ Standard Test and Programming Language (STAPL), JEDEC standard JESD-71. JTAG boundary-scan testing can be performed before or after configuration, but not during configuration. ACEX 1K devices support the JTAG instructions shown in Table 14.

Table 14. ACEX 1K JTAG Instructions

JTAG Instruction	Description
SAMPLE/PRELOAD	Allows a snapshot of signals at the device pins to be captured and examined during normal device operation and permits an initial data pattern to be output at the device pins.
EXTEST	Allows the external circuitry and board-level interconnections to be tested by forcing a test pattern at the output pins and capturing test results at the input pins.
BYPASS	Places the 1-bit bypass register between the `TDI` and `TDO` pins, allowing the BST data to pass synchronously through a selected device to adjacent devices during normal operation.
USERCODE	Selects the user electronic signature (USERCODE) register and places it between the `TDI` and `TDO` pins, allowing the USERCODE to be serially shifted out of `TDO`.
IDCODE	Selects the IDCODE register and places it between `TDI` and `TDO`, allowing the IDCODE to be serially shifted out of `TDO`.
ICR Instructions	These instructions are used when configuring an ACEX 1K device via JTAG ports using a MasterBlaster, ByteBlasterMV, or BitBlaster download cable, or a Jam File (**.jam**) or Jam Byte-Code File (**.jbc**) via an embedded processor.

The instruction register length of ACEX 1K devices is 10 bits. The USERCODE register length in ACEX 1K devices is 32 bits; 7 bits are determined by the user, and 25 bits are pre-determined. Tables 15 and 16 show the boundary-scan register length and device IDCODE information for ACEX 1K devices.

Table 15. ACEX 1K Boundary-Scan Register Length

Device	Boundary-Scan Register Length
EP1K10	438
EP1K30	690
EP1K50	798
EP1K100	1,050

Table 16. 32-Bit IDCODE for ACEX 1K Devices *Note (1)*

Device	IDCODE (32 Bits)			
	Version (4 Bits)	Part Number (16 Bits)	Manufacturer's Identity (11 Bits)	1 (1 Bit) *(2)*
EP1K10	0001	0001 0000 0001 0000	00001101110	1
EP1K30	0001	0001 0000 0011 0000	00001101110	1
EP1K50	0001	0001 0000 0101 0000	00001101110	1
EP1K100	0010	0000 0001 0000 0000	00001101110	1

Notes to tables:

(1) The most significant bit (MSB) is on the left.

(2) The least significant bit (LSB) for all JTAG IDCODEs is 1.

ACEX 1K devices include weak pull-up resistors on the JTAG pins.

For more information, see the following documents:

- *Application Note 39 (IEEE Std. 1149.1 (JTAG) Boundary-Scan Testing in Altera Devices)*
- *ByteBlasterMV Parallel Port Download Cable Data Sheet*
- *BitBlaster Serial Download Cable Data Sheet*
- *Jam Programming & Test Language Specification*

Figure 20 shows the timing requirements for the JTAG signals.

Figure 20. ACEX 1K JTAG Waveforms

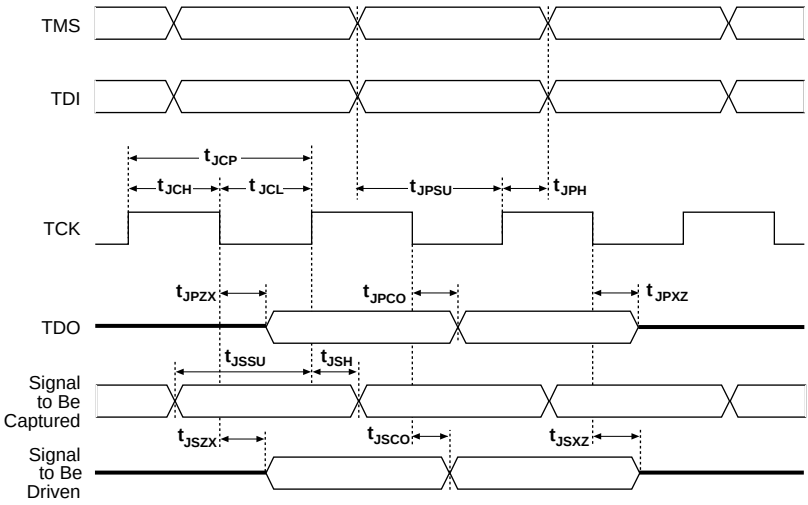

Table 17 shows the timing parameters and values for ACEX 1K devices.

Table 17. ACEX 1K JTAG Timing Parameters & Values

Symbol	Parameter	Min	Max	Unit
t_{JCP}	TCK clock period	100		ns
t_{JCH}	TCK clock high time	50		ns
t_{JCL}	TCK clock low time	50		ns
t_{JPSU}	JTAG port setup time	20		ns
t_{JPH}	JTAG port hold time	45		ns
t_{JPCO}	JTAG port clock to output		25	ns
t_{JPZX}	JTAG port high impedance to valid output		25	ns
t_{JPXZ}	JTAG port valid output to high impedance		25	ns
t_{JSSU}	Capture register setup time	20		ns
t_{JSH}	Capture register hold time	45		ns
t_{JSCO}	Update register clock to output		35	ns
t_{JSZX}	Update register high impedance to valid output		35	ns
t_{JSXZ}	Update register valid output to high impedance		35	ns

Generic Testing

Each ACEX 1K device is functionally tested. Complete testing of each configurable static random access memory (SRAM) bit and all logic functionality ensures 100% yield. AC test measurements for ACEX 1K devices are made under conditions equivalent to those shown in Figure 21. Multiple test patterns can be used to configure devices during all stages of the production flow.

Figure 21. ACEX 1K AC Test Conditions

Power supply transients can affect AC measurements. Simultaneous transitions of multiple outputs should be avoided for accurate measurement. Threshold tests must not be performed under AC conditions. Large-amplitude, fast-ground-current transients normally occur as the device outputs discharge the load capacitances. When these transients flow through the parasitic inductance between the device ground pin and the test system ground, significant reductions in observable noise immunity can result. Numbers in brackets are for 2.5-V devices or outputs. Numbers without brackets are for 3.3-V devices or outputs.

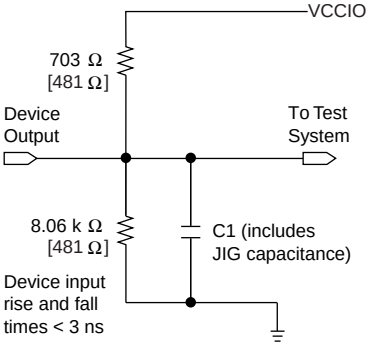

Operating Conditions

Tables 18 through 21 provide information on absolute maximum ratings, recommended operating conditions, DC operating conditions, and capacitance for 2.5-V ACEX 1K devices.

Table 18. ACEX 1K Device Absolute Maximum Ratings *Note (1)*

Symbol	Parameter	Conditions	Min	Max	Unit
V_{CCINT}	Supply voltage	With respect to ground *(2)*	–0.5	3.6	V
V_{CCIO}			–0.5	4.6	V
V_I	DC input voltage		–2.0	5.75	V
I_{OUT}	DC output current, per pin		–25	25	mA
T_{STG}	Storage temperature	No bias	–65	150	° C
T_{AMB}	Ambient temperature	Under bias	–65	135	° C
T_J	Junction temperature	PQFP, TQFP, and BGA packages, under bias		135	° C

Table 19. ACEX 1K Device Recommended Operating Conditions

Symbol	Parameter	Conditions	Min	Max	Unit
V_{CCINT}	Supply voltage for internal logic and input buffers	*(3)*, *(4)*	2.375 (2.375)	2.625 (2.625)	V
V_{CCIO}	Supply voltage for output buffers, 3.3-V operation	*(3)*, *(4)*	3.00 (3.00)	3.60 (3.60)	V
	Supply voltage for output buffers, 2.5-V operation	*(3)*, *(4)*	2.375 (2.375)	2.625 (2.625)	V
V_I	Input voltage	*(2)*, *(5)*	–0.5	5.75	V
V_O	Output voltage		0	V_{CCIO}	V
T_A	Ambient temperature	Commercial range	0	70	° C
		Industrial range	–40	85	° C
T_J	Junction temperature	Commercial range	0	85	° C
		Industrial range	–40	100	° C
		Extended range	–40	125	° C
t_R	Input rise time			40	ns
t_F	Input fall time			40	ns

Table 20. ACEX 1K Device DC Operating Conditions (Part 1 of 2) *Notes (6), (7)*

Symbol	Parameter	Conditions	Min	Typ	Max	Unit
V_{IH}	High-level input voltage		1.7, 0.5 × V_{CCIO} *(8)*		5.75	V
V_{IL}	Low-level input voltage		–0.5		0.8, 0.3 × V_{CCIO} *(8)*	V
V_{OH}	3.3-V high-level TTL output voltage	I_{OH} = –8 mA DC, V_{CCIO} = 3.00 V *(9)*	2.4			V
	3.3-V high-level CMOS output voltage	I_{OH} = –0.1 mA DC, V_{CCIO} = 3.00 V *(9)*	V_{CCIO} – 0.2			V
	3.3-V high-level PCI output voltage	I_{OH} = –0.5 mA DC, V_{CCIO} = 3.00 to 3.60 V *(9)*	0.9 ×†V_{CCIO}			V
	2.5-V high-level output voltage	I_{OH} = –0.1 mA DC, V_{CCIO} = 2.375 V *(9)*	2.1			V
		I_{OH} = –1 mA DC, V_{CCIO} = 2.375 V *(9)*	2.0			V
		I_{OH} = –2 mA DC, V_{CCIO} = 2.375 V *(9)*	1.7			V

Table 20. ACEX 1K Device DC Operating Conditions (Part 2 of 2) *Notes (6), (7)*

Symbol	Parameter	Conditions	Min	Typ	Max	Unit
V_{OL}	3.3-V low-level TTL output voltage	I_{OL} = 12 mA DC, V_{CCIO} = 3.00 V *(10)*			0.45	V
	3.3-V low-level CMOS output voltage	I_{OL} = 0.1 mA DC, V_{CCIO} = 3.00 V *(10)*			0.2	V
	3.3-V low-level PCI output voltage	I_{OL} = 1.5 mA DC, V_{CCIO} = 3.00 to 3.60 V *(10)*			$0.1 \times V_{CCIO}$	V
	2.5-V low-level output voltage	I_{OL} = 0.1 mA DC, V_{CCIO} = 2.375 V *(10)*			0.2	V
		I_{OL} = 1 mA DC, V_{CCIO} = 2.375 V *(10)*			0.4	V
		I_{OL} = 2 mA DC, V_{CCIO} = 2.375 V *(10)*			0.7	V
I_I	Input pin leakage current	V_I = 5.3 to –0.3 V *(11)*	–10		10	µA
I_{OZ}	Tri-stated I/O pin leakage current	V_O = 5.3 to –0.3 V *(11)*	–10		10	µA
I_{CC0}	V_{CC} supply current (standby)	V_I = ground, no load, no toggling inputs		5		mA
		V_I = ground, no load, no toggling inputs *(12)*		10		mA
R_{CONF}	Value of I/O pin pull-up resistor before and during configuration	V_{CCIO} = 3.0 V *(13)*	20		50	kΩ
		V_{CCIO} = 2.375 V *(13)*	30		80	kΩ

Table 21. ACEX 1K Device Capacitance *Note (14)*

Symbol	Parameter	Conditions	Min	Max	Unit
C_{IN}	Input capacitance	V_{IN} = 0 V, f = 1.0 MHz		10	pF
C_{INCLK}	Input capacitance on dedicated clock pin	V_{IN} = 0 V, f = 1.0 MHz		12	pF
C_{OUT}	Output capacitance	V_{OUT} = 0 V, f = 1.0 MHz		10	pF

Notes to tables:

(1) See the *Operating Requirements for Altera Devices Data Sheet*.
(2) Minimum DC input voltage is –0.5 V. During transitions, the inputs may undershoot to –2.0 V for input currents less than 100 mA and periods shorter than 20 ns.
(3) Numbers in parentheses are for industrial- and extended-temperature-range devices.
(4) Maximum V_{CC} rise time is 100 ms, and V_{CC} must rise monotonically.
(5) All pins, including dedicated inputs, clock, I/O, and JTAG pins, may be driven before V_{CCINT} and V_{CCIO} are powered.
(6) Typical values are for T_A = 25° C, V_{CCINT} = 2.5 V, and V_{CCIO} = 2.5 V or 3.3 V.
(7) These values are specified under the ACEX 1K Recommended Operating Conditions shown in Table 19 on page 46.
(8) The ACEX 1K input buffers are compatible with 2.5-V, 3.3-V (LVTTL and LVCMOS), and 5.0-V TTL and CMOS signals. Additionally, the input buffers are 3.3-V PCI compliant when V_{CCIO} and V_{CCINT} meet the relationship shown in Figure 22.
(9) The I_{OH} parameter refers to high-level TTL, PCI, or CMOS output current.
(10) The I_{OL} parameter refers to low-level TTL, PCI, or CMOS output current. This parameter applies to open-drain pins as well as output pins.
(11) This value is specified for normal device operation. The value may vary during power-up.
(12) This parameter applies to -1 speed grade commercial temperature devices and -2 speed grade industrial and extended temperature devices.
(13) Pin pull-up resistance values will be lower if the pin is driven higher than V_{CCIO} by an external source.
(14) Capacitance is sample-tested only.

Figure 22 shows the required relationship between V_{CCIO} and V_{CCINT} to satisfy 3.3-V PCI compliance.

Figure 22. Relationship between V_{CCIO} & V_{CCINT} for 3.3-V PCI Compliance

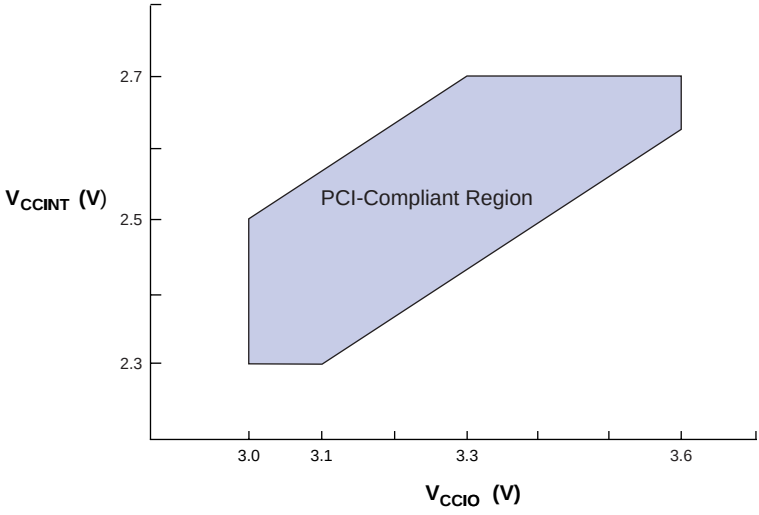

Figure 23 shows the typical output drive characteristics of ACEX 1K devices with 3.3-V and 2.5-V V_{CCIO}. The output driver is compliant to the 3.3-V ***PCI Local Bus Specification***, ***Revision 2.2*** (when `VCCIO` pins are connected to 3.3 V). ACEX 1K devices with a -1 speed grade also comply with the drive strength requirements of the ***PCI Local Bus Specification***, ***Revision 2.2*** (when `VCCINT` pins are powered with a minimum supply of 2.375 V, and `VCCIO` pins are connected to 3.3 V). Therefore, these devices can be used in open 5.0-V PCI systems.

Figure 23. Output Drive Characteristics of ACEX 1K Devices

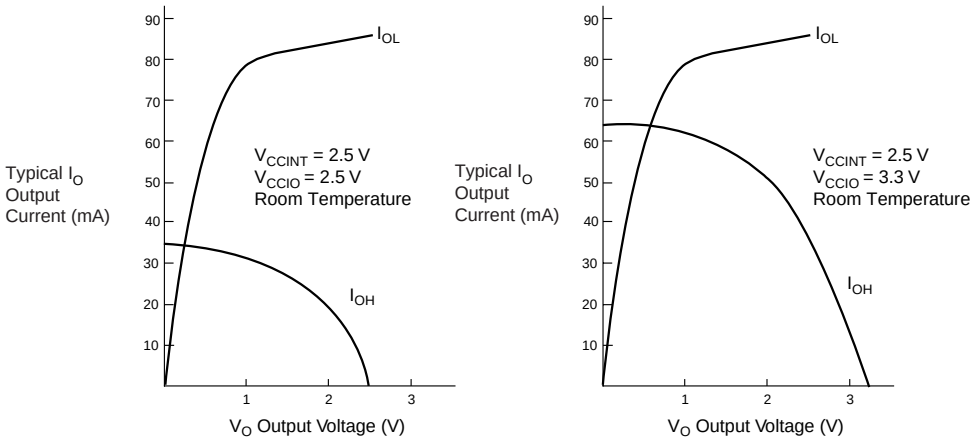

Timing Model

The continuous, high-performance FastTrack Interconnect routing resources ensure accurate simulation and timing analysis as well as predictable performance. This predictable performance contrasts with that of FPGAs, which use a segmented connection scheme and, therefore, have an unpredictable performance.

Device performance can be estimated by following the signal path from a source, through the interconnect, to the destination. For example, the registered performance between two LEs on the same row can be calculated by adding the following parameters:

- LE register clock-to-output delay (t_{CO})
- Interconnect delay ($t_{SAMEROW}$)
- LE look-up table delay (t_{LUT})
- LE register setup time (t_{SU})

The routing delay depends on the placement of the source and destination LEs. A more complex registered path may involve multiple combinatorial LEs between the source and destination LEs.

Timing simulation and delay prediction are available with the simulator and Timing Analyzer, or with industry-standard EDA tools. The Simulator offers both pre-synthesis functional simulation to evaluate logic design accuracy and post-synthesis timing simulation with 0.1-ns resolution. The Timing Analyzer provides point-to-point timing delay information, setup and hold time analysis, and device-wide performance analysis.

Figure 24 shows the overall timing model, which maps the possible paths to and from the various elements of the ACEX 1K device.

Figure 24. ACEX 1K Device Timing Model

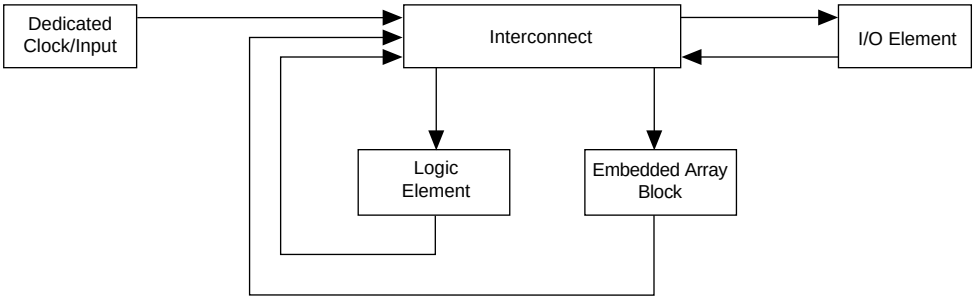

Figures 25 through 28 show the delays that correspond to various paths and functions within the LE, IOE, EAB, and bidirectional timing models.

Figure 25. ACEX 1K Device LE Timing Model

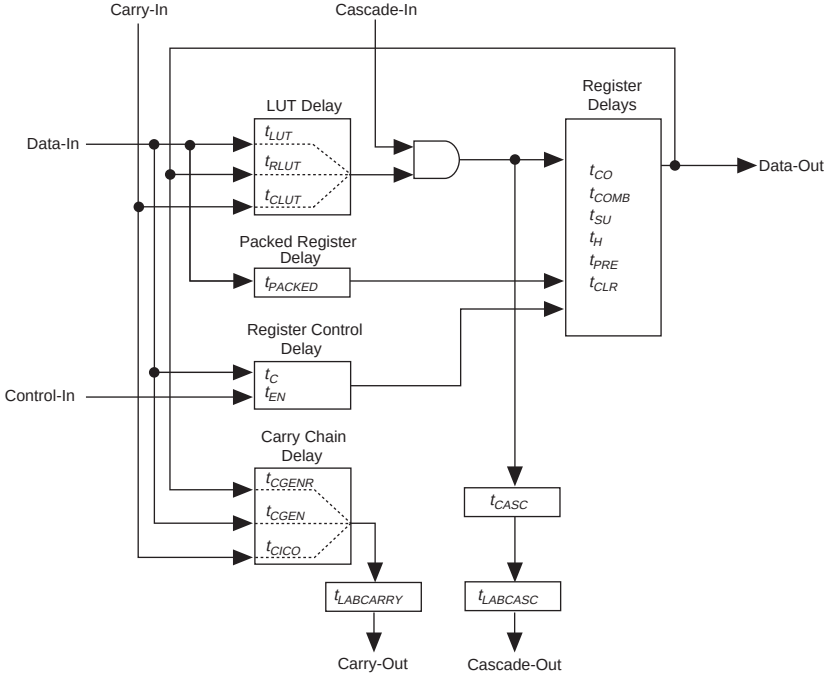

Figure 26. ACEX 1K Device IOE Timing Model

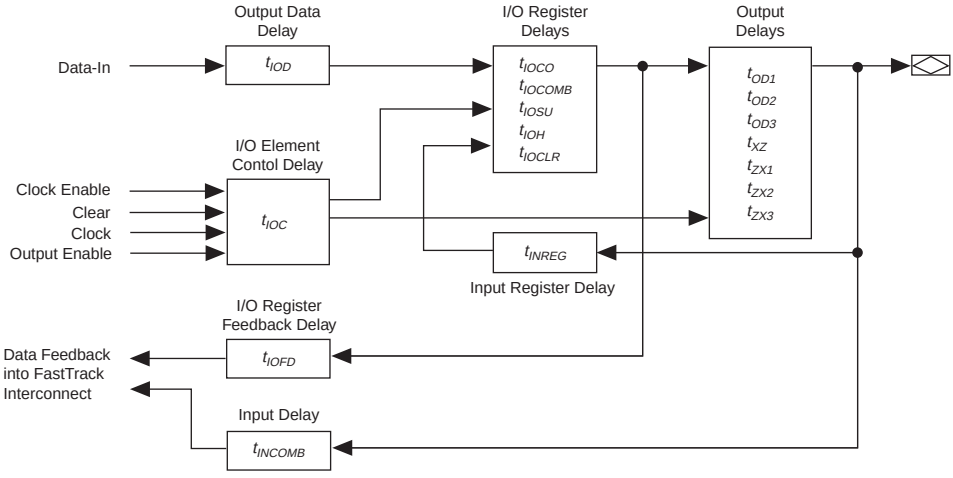

Figure 27. ACEX 1K Device EAB Timing Model

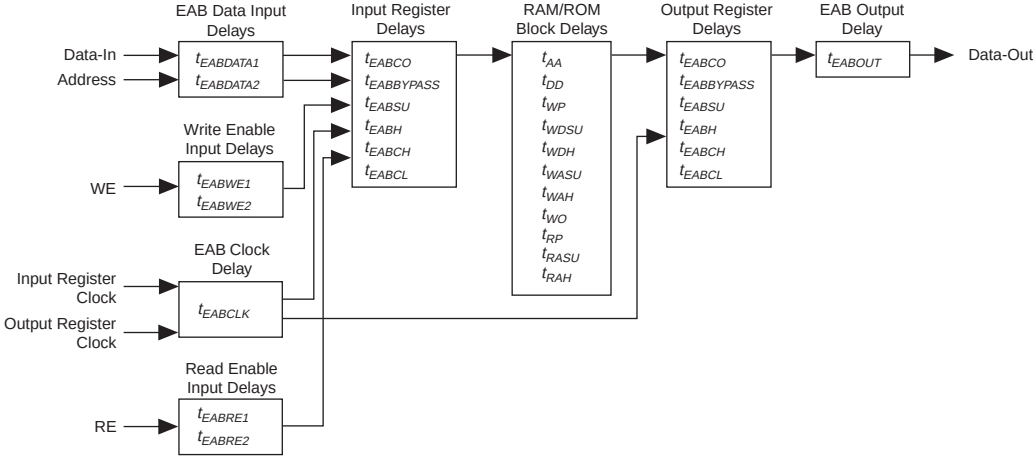

Figure 28. Synchronous Bidirectional Pin External Timing Model

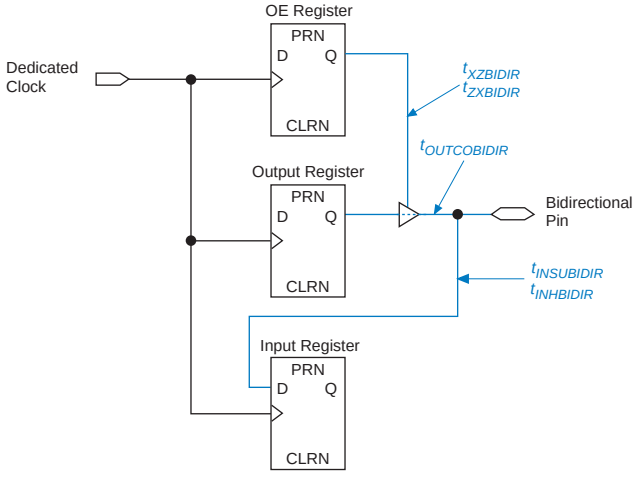

Tables 29 and 30 show the asynchronous and synchronous timing waveforms, respectively, for the EAB macroparameters in Table 24.

Figure 29. EAB Asynchronous Timing Waveforms

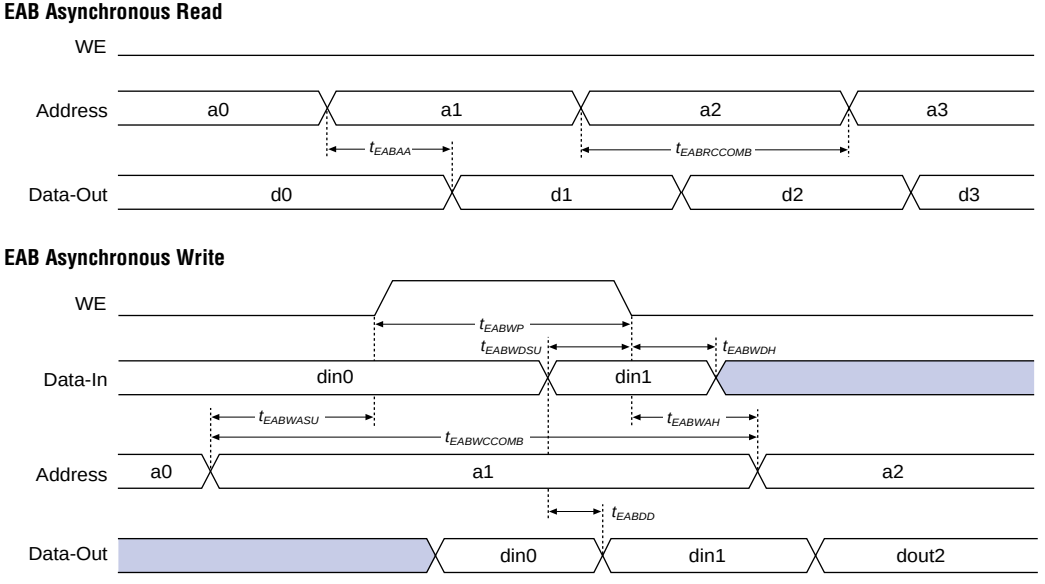

Figure 30. EAB Synchronous Timing Waveforms

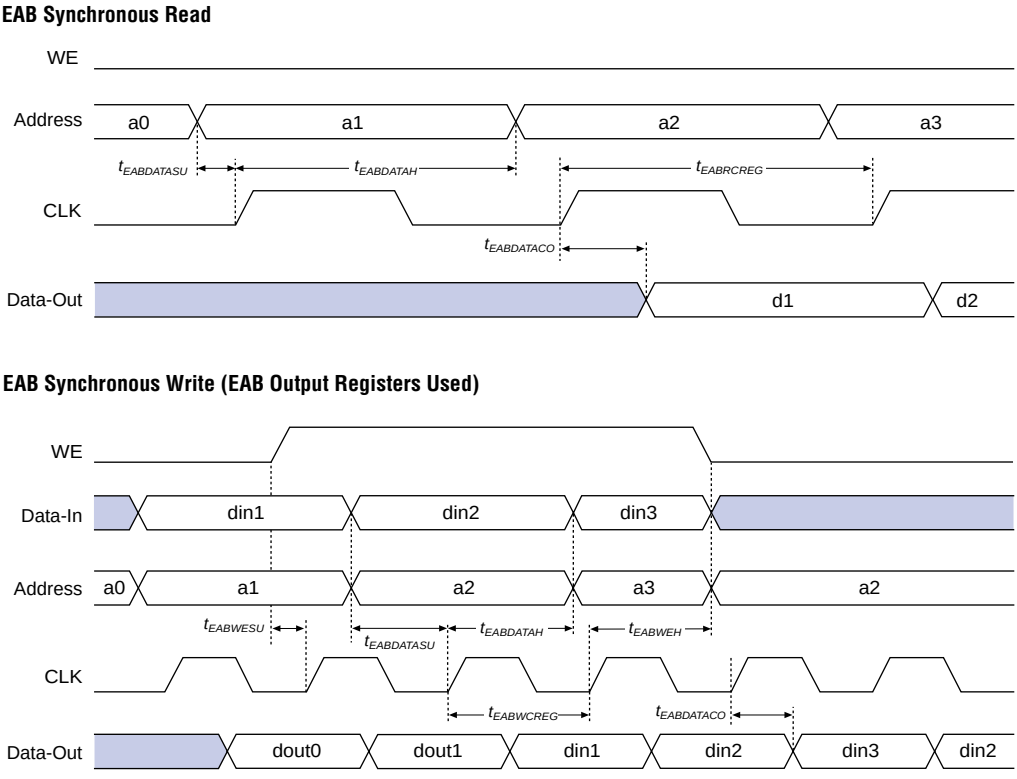

Tables 22 through 26 describe the ACEX 1K device internal timing parameters.

Table 22. LE Timing Microparameters (Part 1 of 2) *Note (1)*

Symbol	Parameter	Conditions
t_{LUT}	LUT delay for data-in	
t_{CLUT}	LUT delay for carry-in	
t_{RLUT}	LUT delay for LE register feedback	
t_{PACKED}	Data-in to packed register delay	
t_{EN}	LE register enable delay	
t_{CICO}	Carry-in to carry-out delay	
t_{CGEN}	Data-in to carry-out delay	
t_{CGENR}	LE register feedback to carry-out delay	

Table 22. LE Timing Microparameters (Part 2 of 2) *Note (1)*

Symbol	Parameter	Conditions
t_{CASC}	Cascade-in to cascade-out delay	
t_{C}	LE register control signal delay	
t_{CO}	LE register clock-to-output delay	
t_{COMB}	Combinatorial delay	
t_{SU}	LE register setup time for data and enable signals before clock; LE register recovery time after asynchronous clear, preset, or load	
t_{H}	LE register hold time for data and enable signals after clock	
t_{PRE}	LE register preset delay	
t_{CLR}	LE register clear delay	
t_{CH}	Minimum clock high time from clock pin	
t_{CL}	Minimum clock low time from clock pin	

Table 23. IOE Timing Microparameters *Note (1)*

Symbol	Parameter	Conditions
t_{IOD}	IOE data delay	
t_{IOC}	IOE register control signal delay	
t_{IOCO}	IOE register clock-to-output delay	
t_{IOCOMB}	IOE combinatorial delay	
t_{IOSU}	IOE register setup time for data and enable signals before clock; IOE register recovery time after asynchronous clear	
t_{IOH}	IOE register hold time for data and enable signals after clock	
t_{IOCLR}	IOE register clear time	
t_{OD1}	Output buffer and pad delay, slow slew rate = off, V_{CCIO} = 3.3 V	C1 = 35 pF *(2)*
t_{OD2}	Output buffer and pad delay, slow slew rate = off, V_{CCIO} = 2.5 V	C1 = 35 pF *(3)*
t_{OD3}	Output buffer and pad delay, slow slew rate = on	C1 = 35 pF *(4)*
t_{XZ}	IOE output buffer disable delay	
t_{ZX1}	IOE output buffer enable delay, slow slew rate = off, V_{CCIO} = 3.3 V	C1 = 35 pF *(2)*
t_{ZX2}	IOE output buffer enable delay, slow slew rate = off, V_{CCIO} = 2.5 V	C1 = 35 pF *(3)*
t_{ZX3}	IOE output buffer enable delay, slow slew rate = on	C1 = 35 pF *(4)*
t_{INREG}	IOE input pad and buffer to IOE register delay	
t_{IOFD}	IOE register feedback delay	
t_{INCOMB}	IOE input pad and buffer to FastTrack Interconnect delay	

Table 24. EAB Timing Microparameters *Note (1)*

Symbol	Parameter	Conditions
$t_{EABDATA1}$	Data or address delay to EAB for combinatorial input	
$t_{EABDATA2}$	Data or address delay to EAB for registered input	
t_{EABWE1}	Write enable delay to EAB for combinatorial input	
t_{EABWE2}	Write enable delay to EAB for registered input	
t_{EABRE1}	Read enable delay to EAB for combinatorial input	
t_{EABRE2}	Read enable delay to EAB for registered input	
t_{EABCLK}	EAB register clock delay	
t_{EABCO}	EAB register clock-to-output delay	
$t_{EABBYPASS}$	Bypass register delay	
t_{EABSU}	EAB register setup time before clock	
t_{EABH}	EAB register hold time after clock	
t_{EABCLR}	EAB register asynchronous clear time to output delay	
t_{AA}	Address access delay (including the read enable to output delay)	
t_{WP}	Write pulse width	
t_{RP}	Read pulse width	
t_{WDSU}	Data setup time before falling edge of write pulse	*(5)*
t_{WDH}	Data hold time after falling edge of write pulse	*(5)*
t_{WASU}	Address setup time before rising edge of write pulse	*(5)*
t_{WAH}	Address hold time after falling edge of write pulse	*(5)*
t_{RASU}	Address setup time before rising edge of read pulse	
t_{RAH}	Address hold time after falling edge of read pulse	
t_{WO}	Write enable to data output valid delay	
t_{DD}	Data-in to data-out valid delay	
t_{EABOUT}	Data-out delay	
t_{EABCH}	Clock high time	
t_{EABCL}	Clock low time	

Table 25. EAB Timing Macroparameters *Notes (1), (6)*

Symbol	Parameter	Conditions
t_{EABAA}	EAB address access delay	
$t_{EABRCCOMB}$	EAB asynchronous read cycle time	
$t_{EABRCREG}$	EAB synchronous read cycle time	
t_{EABWP}	EAB write pulse width	
$t_{EABWCCOMB}$	EAB asynchronous write cycle time	
$t_{EABWCREG}$	EAB synchronous write cycle time	
t_{EABDD}	EAB data-in to data-out valid delay	
$t_{EABDATACO}$	EAB clock-to-output delay when using output registers	
$t_{EABDATASU}$	EAB data/address setup time before clock when using input register	
$t_{EABDATAH}$	EAB data/address hold time after clock when using input register	
$t_{EABWESU}$	EAB WE setup time before clock when using input register	
t_{EABWEH}	EAB WE hold time after clock when using input register	
$t_{EABWDSU}$	EAB data setup time before falling edge of write pulse when not using input registers	
t_{EABWDH}	EAB data hold time after falling edge of write pulse when not using input registers	
$t_{EABWASU}$	EAB address setup time before rising edge of write pulse when not using input registers	
t_{EABWAH}	EAB address hold time after falling edge of write pulse when not using input registers	
t_{EABWO}	EAB write enable to data output valid delay	

Table 26. Interconnect Timing Microparameters *Note (1)*

Symbol	Parameter	Conditions
$t_{DIN2IOE}$	Delay from dedicated input pin to IOE control input	*(7)*
t_{DIN2LE}	Delay from dedicated input pin to LE or EAB control input	*(7)*
$t_{DIN2DATA}$	Delay from dedicated input or clock to LE or EAB data	*(7)*
$t_{DCLK2IOE}$	Delay from dedicated clock pin to IOE clock	*(7)*
$t_{DCLK2LE}$	Delay from dedicated clock pin to LE or EAB clock	*(7)*
$t_{SAMELAB}$	Routing delay for an LE driving another LE in the same LAB	*(7)*
$t_{SAMEROW}$	Routing delay for a row IOE, LE, or EAB driving a row IOE, LE, or EAB in the same row	*(7)*
$t_{SAMECOLUMN}$	Routing delay for an LE driving an IOE in the same column	*(7)*
$t_{DIFFROW}$	Routing delay for a column IOE, LE, or EAB driving an LE or EAB in a different row	*(7)*
$t_{TWOROWS}$	Routing delay for a row IOE or EAB driving an LE or EAB in a different row	*(7)*
$t_{LEPERIPH}$	Routing delay for an LE driving a control signal of an IOE via the peripheral control bus	*(7)*
$t_{LABCARRY}$	Routing delay for the carry-out signal of an LE driving the carry-in signal of a different LE in a different LAB	
$t_{LABCASC}$	Routing delay for the cascade-out signal of an LE driving the cascade-in signal of a different LE in a different LAB	

Notes to tables:

(1) Microparameters are timing delays contributed by individual architectural elements. These parameters cannot be measured explicitly.
(2) Operating conditions: V_{CCIO} = 3.3 V ± 10% for commercial or industrial and extended use in ACEX 1K devices
(3) Operating conditions: V_{CCIO} = 2.5 V ± 5% for commercial or industrial and extended use in ACEX 1K devices.
(4) Operating conditions: V_{CCIO} = 2.5 V or 3.3 V.
(5) Because the RAM in the EAB is self-timed, this parameter can be ignored when the `WE` signal is registered.
(6) EAB macroparameters are internal parameters that can simplify predicting the behavior of an EAB at its boundary; these parameters are calculated by summing selected microparameters.
(7) These parameters are worst-case values for typical applications. Post-compilation timing simulation and timing analysis are required to determine actual worst-case performance.

Tables 27 through 29 describe the ACEX 1K external timing parameters and their symbols.

Table 27. External Reference Timing Parameters *Note (1)*

Symbol	Parameter	Conditions
t_{DRR}	Register-to-register delay via four LEs, three row interconnects, and four local interconnects	*(2)*

Table 28. External Timing Parameters

Symbol	Parameter	Conditions
t_{INSU}	Setup time with global clock at IOE register	*(3)*
t_{INH}	Hold time with global clock at IOE register	*(3)*
t_{OUTCO}	Clock-to-output delay with global clock at IOE register	*(3)*
t_{PCISU}	Setup time with global clock for registers used in PCI designs	*(3)*, *(4)*
t_{PCIH}	Hold time with global clock for registers used in PCI designs	*(3)*, *(4)*
t_{PCICO}	Clock-to-output delay with global clock for registers used in PCI designs	*(3)*, *(4)*

Table 29. External Bidirectional Timing Parameters *Note (3)*

Symbol	Parameter	Conditions
$t_{INSUBIDIR}$	Setup time for bidirectional pins with global clock at same-row or same-column LE register	
$t_{INHBIDIR}$	Hold time for bidirectional pins with global clock at same-row or same-column LE register	
$t_{OUTCOBIDIR}$	Clock-to-output delay for bidirectional pins with global clock at IOE register	CI = 35 pF
$t_{XZBIDIR}$	Synchronous IOE output buffer disable delay	CI = 35 pF
$t_{ZXBIDIR}$	Synchronous IOE output buffer enable delay, slow slew rate = off	CI = 35 pF

Notes to tables:

(1) External reference timing parameters are factory-tested, worst-case values specified by Altera. A representative subset of signal paths is tested to approximate typical device applications.

(2) Contact Altera Applications for test circuit specifications and test conditions.

(3) These timing parameters are sample-tested only.

(4) This parameter is measured with the measurement and test conditions, including load, specified in the ***PCI Local Bus Specification, Revision 2.2.***

Tables 30 through 36 show EP1K10 device internal and external timing parameters.

Table 30. EP1K10 Device LE Timing Microparameters *Note (1)*

Symbol	Speed Grade						Unit
	-1		-2		-3		
	Min	Max	Min	Max	Min	Max	
t_{LUT}		0.7		0.8		1.1	ns
t_{CLUT}		0.5		0.6		0.8	ns
t_{RLUT}		0.6		0.7		1.0	ns
t_{PACKED}		0.4		0.4		0.5	ns
t_{EN}		0.9		1.0		1.3	ns
t_{CICO}		0.1		0.1		0.2	ns
t_{CGEN}		0.4		0.5		0.7	ns
t_{CGENR}		0.1		0.1		0.2	ns
t_{CASC}		0.7		0.9		1.1	ns
t_{C}		1.1		1.3		1.7	ns
t_{CO}		0.5		0.7		0.9	ns
t_{COMB}		0.4		0.5		0.7	ns
t_{SU}	0.7		0.8		1.0		ns
t_{H}	0.9		1.0		1.1		ns
t_{PRE}		0.8		1.0		1.4	ns
t_{CLR}		0.9		1.0		1.4	ns
t_{CH}	2.0		2.5		2.5		ns
t_{CL}	2.0		2.5		2.5		ns

Table 31. EP1K10 Device IOE Timing Microparameters *Note (1)*

Symbol	Speed Grade						Unit
	-1		-2		-3		
	Min	Max	Min	Max	Min	Max	
t_{IOD}		2.6		3.1		4.0	ns
t_{IOC}		0.3		0.4		0.5	ns
t_{IOCO}		0.9		1.0		1.4	ns
t_{IOCOMB}		0.0		0.0		0.0	ns
t_{IOSU}	1.3		1.5		2.0		ns
t_{IOH}	0.9		1.0		1.4		ns
t_{IOCLR}		1.1		1.3		1.7	ns
t_{OD1}		3.1		3.7		4.1	ns
t_{OD2}		2.6		3.3		3.9	ns
t_{OD3}		5.8		6.9		8.3	ns
t_{XZ}		3.8		4.5		5.9	ns
t_{ZX1}		3.8		4.5		5.9	ns
t_{ZX2}		3.3		4.1		5.7	ns
t_{ZX3}		6.5		7.7		10.1	ns
t_{INREG}		3.7		4.3		5.7	ns
t_{IOFD}		0.9		1.0		1.4	ns
t_{INCOMB}		1.9		2.3		3.0	ns

Table 32. EP1K10 Device EAB Internal Microparameters *Note (1)*

Symbol	Speed Grade						Unit
	-1		-2		-3		
	Min	Max	Min	Max	Min	Max	
$t_{EABDATA1}$		1.8		1.9		1.9	ns
$t_{EABDATA2}$		0.6		0.7		0.7	ns
t_{EABWE1}		1.2		1.2		1.2	ns
t_{EABWE2}		0.4		0.4		0.4	ns
t_{EABRE1}		0.9		0.9		0.9	ns
t_{EABRE2}		0.4		0.4		0.4	ns
t_{EABCLK}		0.0		0.0		0.0	ns
t_{EABCO}		0.3		0.3		0.3	ns
$t_{EABBYPASS}$		0.5		0.6		0.6	ns
t_{EABSU}	1.0		1.0		1.0		ns
t_{EABH}	0.5		0.4		0.4		ns
t_{EABCLR}	0.3		0.3		0.3		ns
t_{AA}		3.4		3.6		3.6	ns
t_{WP}	2.7		2.8		2.8		ns
t_{RP}	1.0		1.0		1.0		ns
t_{WDSU}	1.0		1.0		1.0		ns
t_{WDH}	0.1		0.1		0.1		ns
t_{WASU}	1.8		1.9		1.9		ns
t_{WAH}	1.9		2.0		2.0		ns
t_{RASU}	3.1		3.5		3.5		ns
t_{RAH}	0.2		0.2		0.2		ns
t_{WO}		2.7		2.8		2.8	ns
t_{DD}		2.7		2.8		2.8	ns
t_{EABOUT}		0.5		0.6		0.6	ns
t_{EABCH}	1.5		2.0		2.0		ns
t_{EABCL}	2.7		2.8		2.8		ns

Table 33. EP1K10 Device EAB Internal Timing Macroparameters *Note (1)*

Symbol	Speed Grade						Unit
	-1		-2		-3		
	Min	Max	Min	Max	Min	Max	
t_{EABAA}		6.7		7.3		7.3	ns
$t_{EABRCCOMB}$	6.7		7.3		7.3		ns
$t_{EABRCREG}$	4.7		4.9		4.9		ns
t_{EABWP}	2.7		2.8		2.8		ns
$t_{EABWCCOMB}$	6.4		6.7		6.7		ns
$t_{EABWCREG}$	7.4		7.6		7.6		ns
t_{EABDD}		6.0		6.5		6.5	ns
$t_{EABDATACO}$		0.8		0.9		0.9	ns
$t_{EABDATASU}$	1.6		1.7		1.7		ns
$t_{EABDATAH}$	0.0		0.0		0.0		ns
$t_{EABWESU}$	1.4		1.4		1.4		ns
t_{EABWEH}	0.1		0.0		0.0		ns
$t_{EABWDSU}$	1.6		1.7		1.7		ns
t_{EABWDH}	0.0		0.0		0.0		ns
$t_{EABWASU}$	3.1		3.4		3.4		ns
t_{EABWAH}	0.6		0.5		0.5		ns
t_{EABWO}		5.4		5.8		5.8	ns

Table 34. EP1K10 Device Interconnect Timing Microparameters *Note (1)*

Symbol	Speed Grade						Unit
	-1		-2		-3		
	Min	Max	Min	Max	Min	Max	
$t_{DIN2IOE}$		2.3		2.7		3.6	ns
t_{DIN2LE}		0.8		1.1		1.4	ns
$t_{DIN2DATA}$		1.1		1.4		1.8	ns
$t_{DCLK2IOE}$		2.3		2.7		3.6	ns
$t_{DCLK2LE}$		0.8		1.1		1.4	ns
$t_{SAMELAB}$		0.1		0.1		0.2	ns
$t_{SAMEROW}$		1.8		2.1		2.9	ns
$t_{SAMECOLUMN}$		0.3		0.4		0.7	ns
$t_{DIFFROW}$		2.1		2.5		3.6	ns
$t_{TWOROWS}$		3.9		4.6		6.5	ns
$t_{LEPERIPH}$		3.3		3.7		4.8	ns
$t_{LABCARRY}$		0.3		0.4		0.5	ns
$t_{LABCASC}$		0.9		1.0		1.4	ns

Table 35. EP1K10 External Timing Parameters *Note (1)*

Symbol	Speed Grade						Unit
	-1		-2		-3		
	Min	Max	Min	Max	Min	Max	
t_{DRR}		7.5		9.5		12.5	ns
t_{INSU} *(2), (3)*	2.4		2.7		3.6		ns
t_{INH} *(2), (3)*	0.0		0.0		0.0		ns
t_{OUTCO} *(2), (3)*	2.0	6.6	2.0	7.8	2.0	9.6	ns
t_{INSU} *(4), (3)*	1.4		1.7		–		ns
t_{INH} *(4), (3)*	0.5	5.1	0.5	6.4	–	–	ns
t_{OUTCO} *(4), (3)*	0.0		0.0		–		ns
t_{PCISU} *(3)*	3.0		4.2		6.4		ns
t_{PCIH} *(3)*	0.0		0.0		–		ns
t_{PCICO} *(3)*	2.0	6.0	2.0	7.5	2.0	10.2	ns

Table 36. EP1K10 External Bidirectional Timing Parameters *Notes (1), (3)*

Symbol	Speed Grade						Unit
	-1		-2		-3		
	Min	Max	Min	Max	Min	Max	
$t_{INSUBIDIR}$ *(2)*	2.2		2.3		3.2		ns
$t_{INHBIDIR}$ *(2)*	0.0		0.0		0.0		ns
$t_{OUTCOBIDIR}$ *(2)*	2.0	6.6	2.0	7.8	2.0	9.6	ns
$t_{XZBIDIR}$ *(2)*		8.8		11.2		14.0	ns
$t_{ZXBIDIR}$ *(2)*		8.8		11.2		14.0	ns
$t_{INSUBIDIR}$ *(4)*	3.1		3.3		–	–	
$t_{INHBIDIR}$ *(4)*	0.0		0.0		–		
$t_{OUTCOBIDIR}$ *(4)*	0.5	5.1	0.5	6.4	–	–	ns
$t_{XZBIDIR}$ *(4)*		7.3		9.2		–	ns
$t_{ZXBIDIR}$ *(4)*		7.3		9.2		–	ns

Notes to tables:

(1) All timing parameters are described in Tables 22 through 29 in this data sheet.
(2) This parameter is measured without the use of the ClockLock or ClockBoost circuits.
(3) These parameters are specified by characterization.
(4) This parameter is measured with the use of the ClockLock or ClockBoost circuits.

Tables 37 through 43 show EP1K30 device internal and external timing parameters.

Table 37. EP1K30 Device LE Timing Microparameters (Part 1 of 2) *Note (1)*

Symbol	Speed Grade						Unit
	-1		-2		-3		
	Min	Max	Min	Max	Min	Max	
t_{LUT}		0.7		0.8		1.1	ns
t_{CLUT}		0.5		0.6		0.8	ns
t_{RLUT}		0.6		0.7		1.0	ns
t_{PACKED}		0.3		0.4		0.5	ns
t_{EN}		0.6		0.8		1.0	ns
t_{CICO}		0.1		0.1		0.2	ns
t_{CGEN}		0.4		0.5		0.7	ns
t_{CGENR}		0.1		0.1		0.2	ns
t_{CASC}		0.6		0.8		1.0	ns
t_{C}		0.0		0.0		0.0	ns
t_{CO}		0.3		0.4		0.5	ns

Table 37. EP1K30 Device LE Timing Microparameters (Part 2 of 2) *Note (1)*

Symbol	Speed Grade						Unit
	-1		-2		-3		
	Min	Max	Min	Max	Min	Max	
t_{COMB}		0.4		0.4		0.6	ns
t_{SU}	0.4		0.6		0.6		ns
t_{H}	0.7		1.0		1.3		ns
t_{PRE}		0.8		0.9		1.2	ns
t_{CLR}		0.8		0.9		1.2	ns
t_{CH}	2.0		2.5		2.5		ns
t_{CL}	2.0		2.5		2.5		ns

Table 38. EP1K30 Device IOE Timing Microparameters *Note (1)*

Symbol	Speed Grade						Unit
	-1		-2		-3		
	Min	Max	Min	Max	Min	Max	
t_{IOD}		2.4		2.8		3.8	ns
t_{IOC}		0.3		0.4		0.5	ns
t_{IOCO}		1.0		1.1		1.6	ns
t_{IOCOMB}		0.0		0.0		0.0	ns
t_{IOSU}	1.2		1.4		1.9		ns
t_{IOH}	0.3		0.4		0.5		ns
t_{IOCLR}		1.0		1.1		1.6	ns
t_{OD1}		1.9		2.3		3.0	ns
t_{OD2}		1.4		1.8		2.5	ns
t_{OD3}		4.4		5.2		7.0	ns
t_{XZ}		2.7		3.1		4.3	ns
t_{ZX1}		2.7		3.1		4.3	ns
t_{ZX2}		2.2		2.6		3.8	ns
t_{ZX3}		5.2		6.0		8.3	ns
t_{INREG}		3.4		4.1		5.5	ns
t_{IOFD}		0.8		1.3		2.4	ns
t_{INCOMB}		0.8		1.3		2.4	ns

Table 39. EP1K30 Device EAB Internal Microparameters *Note (1)*

Symbol	Speed Grade						Unit
	-1		-2		-3		
	Min	Max	Min	Max	Min	Max	
$t_{EABDATA1}$		1.7		2.0		2.3	ns
$t_{EABDATA1}$		0.6		0.7		0.8	ns
t_{EABWE1}		1.1		1.3		1.4	ns
t_{EABWE2}		0.4		0.4		0.5	ns
t_{EABRE1}		0.8		0.9		1.0	ns
t_{EABRE2}		0.4		0.4		0.5	ns
t_{EABCLK}		0.0		0.0		0.0	ns
t_{EABCO}		0.3		0.3		0.4	ns
$t_{EABBYPASS}$		0.5		0.6		0.7	ns
t_{EABSU}	0.9		1.0		1.2		ns
t_{EABH}	0.4		0.4		0.5		ns
t_{EABCLR}	0.3		0.3		0.3		ns
t_{AA}		3.2		3.8		4.4	ns
t_{WP}	2.5		2.9		3.3		ns
t_{RP}	0.9		1.1		1.2		ns
t_{WDSU}	0.9		1.0		1.1		ns
t_{WDH}	0.1		0.1		0.1		ns
t_{WASU}	1.7		2.0		2.3		ns
t_{WAH}	1.8		2.1		2.4		ns
t_{RASU}	3.1		3.7		4.2		ns
t_{RAH}	0.2		0.2		0.2		ns
t_{WO}		2.5		2.9		3.3	ns
t_{DD}		2.5		2.9		3.3	ns
t_{EABOUT}		0.5		0.6		0.7	ns
t_{EABCH}	1.5		2.0		2.3		ns
t_{EABCL}	2.5		2.9		3.3		ns

Table 40. EP1K30 Device EAB Internal Timing Macroparameters *Note (1)*

Symbol	Speed Grade						Unit
	-1		-2		-3		
	Min	Max	Min	Max	Min	Max	
t_{EABAA}		6.4		7.6		8.8	ns
$t_{EABRCOMB}$	6.4		7.6		8.8		ns
$t_{EABRCREG}$	4.4		5.1		6.0		ns
t_{EABWP}	2.5		2.9		3.3		ns
$t_{EABWCOMB}$	6.0		7.0		8.0		ns
$t_{EABWCREG}$	6.8		7.8		9.0		ns
t_{EABDD}		5.7		6.7		7.7	ns
$t_{EABDATACO}$		0.8		0.9		1.1	ns
$t_{EABDATASU}$	1.5		1.7		2.0		ns
$t_{EABDATAH}$	0.0		0.0		0.0		ns
$t_{EABWESU}$	1.3		1.4		1.7		ns
t_{EABWEH}	0.0		0.0		0.0		ns
$t_{EABWDSU}$	1.5		1.7		2.0		ns
t_{EABWDH}	0.0		0.0		0.0		ns
$t_{EABWASU}$	3.0		3.6		4.3		ns
t_{EABWAH}	0.5		0.5		0.4		ns
t_{EABWO}		5.1		6.0		6.8	ns

Table 41. EP1K30 Device Interconnect Timing Microparameters *Note (1)*

Symbol	Speed Grade						Unit
	-1		-2		-3		
	Min	Max	Min	Max	Min	Max	
$t_{DIN2IOE}$		1.8		2.4		2.9	ns
t_{DIN2LE}		1.5		1.8		2.4	ns
$t_{DIN2DATA}$		1.5		1.8		2.2	ns
$t_{DCLK2IOE}$		2.2		2.6		3.0	ns
$t_{DCLK2LE}$		1.5		1.8		2.4	ns
$t_{SAMELAB}$		0.1		0.2		0.3	ns
$t_{SAMEROW}$		2.0		2.4		2.7	ns
$t_{SAMECOLUMN}$		0.7		1.0		0.8	ns
$t_{DIFFROW}$		2.7		3.4		3.5	ns
$t_{TWOROWS}$		4.7		5.8		6.2	ns
$t_{LEPERIPH}$		2.7		3.4		3.8	ns
$t_{LABCARRY}$		0.3		0.4		0.5	ns
$t_{LABCASC}$		0.8		0.8		1.1	ns

Table 42. EP1K30 External Timing Parameters *Notes (1), (2)*

Symbol	Speed Grade						Unit
	-1		-2		-3		
	Min	Max	Min	Max	Min	Max	
t_{DRR}		8.0		9.5		12.5	ns
t_{INSU} *(3)*	2.1		2.5		3.9		ns
t_{INH} *(3)*	0.0		0.0		0.0		ns
t_{OUTCO} *(3)*	2.0	4.9	2.0	5.9	2.0	7.6	ns
t_{INSU} *(4)*	1.1		1.5		–		ns
t_{INH} *(4)*	0.0		0.0		–		ns
t_{OUTCO} *(4)*	0.5	3.9	0.5	4.9	–	–	ns
t_{PCISU}	3.0		4.2		–		ns
t_{PCIH}	0.0		0.0		–		ns
t_{PCICO}	2.0	6.0	2.0	7.5	–	–	ns

Table 43. EP1K30 External Bidirectional Timing Parameters *Notes (1), (2)*

Symbol	Speed Grade						Unit
	-1		-2		-3		
	Min	Max	Min	Max	Min	Max	
$t_{INSUBIDIR}$ *(3)*	2.8		3.9		5.2		ns
$t_{INHBIDIR}$ *(3)*	0.0		0.0		0.0		ns
$t_{INSUBIDIR}$ *(4)*	3.8		4.9		–		ns
$t_{INHBIDIR}$ *(4)*	0.0		0.0		–		ns
$t_{OUTCOBIDIR}$ *(3)*	2.0	4.9	2.0	5.9	2.0	7.6	ns
$t_{XZBIDIR}$ *(3)*		6.1		7.5		9.7	ns
$t_{ZXBIDIR}$ *(3)*		6.1		7.5		9.7	ns
$t_{OUTCOBIDIR}$ *(4)*	0.5	3.9	0.5	4.9	–	–	ns
$t_{XZBIDIR}$ *(4)*		5.1		6.5		–	ns
$t_{ZXBIDIR}$ *(4)*		5.1		6.5		–	ns

Notes to tables:

(1) All timing parameters are described in Tables 22 through 29 in this data sheet.
(2) These parameters are specified by characterization.
(3) This parameter is measured without the use of the ClockLock or ClockBoost circuits.
(4) This parameter is measured with the use of the ClockLock or ClockBoost circuits.

Tables 44 through 50 show EP1K50 device external timing parameters.

Table 44. EP1K50 Device LE Timing Microparameters (Part 1 of 2) *Note (1)*

Symbol	Speed Grade						Unit
	-1		-2		-3		
	Min	Max	Min	Max	Min	Max	
t_{LUT}		0.6		0.8		1.1	ns
t_{CLUT}		0.5		0.6		0.8	ns
t_{RLUT}		0.6		0.7		0.9	ns
t_{PACKED}		0.2		0.3		0.4	ns
t_{EN}		0.6		0.7		0.9	ns
t_{CICO}		0.1		0.1		0.1	ns
t_{CGEN}		0.4		0.5		0.6	ns
t_{CGENR}		0.1		0.1		0.1	ns
t_{CASC}		0.5		0.8		1.0	ns
t_{C}		0.5		0.6		0.8	ns

Table 44. EP1K50 Device LE Timing Microparameters (Part 2 of 2) *Note (1)*

Symbol	Speed Grade						Unit
	-1		-2		-3		
	Min	Max	Min	Max	Min	Max	
t_{CO}		0.6		0.6		0.7	ns
t_{COMB}		0.3		0.4		0.5	ns
t_{SU}	0.5		0.6		0.7		ns
t_{H}	0.5		0.6		0.8		ns
t_{PRE}		0.4		0.5		0.7	ns
t_{CLR}		0.8		1.0		1.2	ns
t_{CH}	2.0		2.5		3.0		ns
t_{CL}	2.0		2.5		3.0		ns

Table 45. EP1K50 Device IOE Timing Microparameters *Note (1)*

Symbol	Speed Grade						Unit
	-1		-2		-3		
	Min	Max	Min	Max	Min	Max	
t_{IOD}		1.3		1.3		1.9	ns
t_{IOC}		0.3		0.4		0.4	ns
t_{IOCO}		1.7		2.1		2.6	ns
t_{IOCOMB}		0.5		0.6		0.8	ns
t_{IOSU}	0.8		1.0		1.3		ns
t_{IOH}	0.4		0.5		0.6		ns
t_{IOCLR}		0.2		0.2		0.4	ns
t_{OD1}		1.2		1.2		1.9	ns
t_{OD2}		0.7		0.8		1.7	ns
t_{OD3}		2.7		3.0		4.3	ns
t_{XZ}		4.7		5.7		7.5	ns
t_{ZX1}		4.7		5.7		7.5	ns
t_{ZX2}		4.2		5.3		7.3	ns
t_{ZX3}		6.2		7.5		9.9	ns
t_{INREG}		3.5		4.2		5.6	ns
t_{IOFD}		1.1		1.3		1.8	ns
t_{INCOMB}		1.1		1.3		1.8	ns

Table 46. EP1K50 Device EAB Internal Microparameters *Note (1)*

Symbol	Speed Grade						Unit
	-1		-2		-3		
	Min	Max	Min	Max	Min	Max	
$t_{EABDATA1}$		1.7		2.4		3.2	ns
$t_{EABDATA2}$		0.4		0.6		0.8	ns
t_{EABWE1}		1.0		1.4		1.9	ns
t_{EABWE2}		0.0		0.0		0.0	ns
t_{EABRE1}		0.0		0.0		0.0	
t_{EABRE2}		0.4		0.6		0.8	
t_{EABCLK}		0.0		0.0		0.0	ns
t_{EABCO}		0.8		1.1		1.5	ns
$t_{EABBYPASS}$		0.0		0.0		0.0	ns
t_{EABSU}	0.7		1.0		1.3		ns
t_{EABH}	0.4		0.6		0.8		ns
t_{EABCLR}	0.8		1.1		1.5		
t_{AA}		2.0		2.8		3.8	ns
t_{WP}	2.0		2.8		3.8		ns
t_{RP}	1.0		1.4		1.9		
t_{WDSU}	0.5		0.7		0.9		ns
t_{WDH}	0.1		0.1		0.2		ns
t_{WASU}	1.0		1.4		1.9		ns
t_{WAH}	1.5		2.1		2.9		ns
t_{RASU}	1.5		2.1		2.8		
t_{RAH}	0.1		0.1		0.2		
t_{WO}		2.1		2.9		4.0	ns
t_{DD}		2.1		2.9		4.0	ns
t_{EABOUT}		0.0		0.0		0.0	ns
t_{EABCH}	1.5		2.0		2.5		ns
t_{EABCL}	1.5		2.0		2.5		ns

Table 47. EP1K50 Device EAB Internal Timing Macroparameters *Note (1)*

Symbol	Speed Grade						Unit
	-1		-2		-3		
	Min	Max	Min	Max	Min	Max	
t_{EABAA}		3.7		5.2		7.0	ns
$t_{EABRCCOMB}$	3.7		5.2		7.0		ns
$t_{EABRCREG}$	3.5		4.9		6.6		ns
t_{EABWP}	2.0		2.8		3.8		ns
$t_{EABWCCOMB}$	4.5		6.3		8.6		ns
$t_{EABWCREG}$	5.6		7.8		10.6		ns
t_{EABDD}		3.8		5.3		7.2	ns
$t_{EABDATACO}$		0.8		1.1		1.5	ns
$t_{EABDATASU}$	1.1		1.6		2.1		ns
$t_{EABDATAH}$	0.0		0.0		0.0		ns
$t_{EABWESU}$	0.7		1.0		1.3		ns
t_{EABWEH}	0.4		0.6		0.8		ns
$t_{EABWDSU}$	1.2		1.7		2.2		ns
t_{EABWDH}	0.0		0.0		0.0		ns
$t_{EABWASU}$	1.6		2.3		3.0		ns
t_{EABWAH}	0.9		1.2		1.8		ns
t_{EABWO}		3.1		4.3		5.9	ns

Table 48. EP1K50 Device Interconnect Timing Microparameters *Note (1)*

Symbol	Speed Grade						Unit
	-1		-2		-3		
	Min	Max	Min	Max	Min	Max	
$t_{DIN2IOE}$		3.1		3.7		4.6	ns
t_{DIN2LE}		1.7		2.1		2.7	ns
$t_{DIN2DATA}$		2.7		3.1		5.1	ns
$t_{DCLK2IOE}$		1.6		1.9		2.6	ns
$t_{DCLK2LE}$		1.7		2.1		2.7	ns
$t_{SAMELAB}$		0.1		0.1		0.2	ns
$t_{SAMEROW}$		1.5		1.7		2.4	ns
$t_{SAMECOLUMN}$		1.0		1.3		2.1	ns
$t_{DIFFROW}$		2.5		3.0		4.5	ns
$t_{TWOROWS}$		4.0		4.7		6.9	ns
$t_{LEPERIPH}$		2.6		2.9		3.4	ns
$t_{LABCARRY}$		0.1		0.2		0.2	ns
$t_{LABCASC}$		0.8		1.0		1.3	ns

Table 49. EP1K50 External Timing Parameters *Note (1)*

Symbol	Speed Grade						Unit
	-1		-2		-3		
	Min	Max	Min	Max	Min	Max	
t_{DRR}		8.0		9.5		12.5	ns
t_{INSU} *(2)*	2.4		2.9		3.9		ns
t_{INH} *(2)*	0.0		0.0		0.0		ns
t_{OUTCO} *(2)*	2.0	4.3	2.0	5.2	2.0	7.3	ns
t_{INSU} *(3)*	2.4		2.9		–		ns
t_{INH} *(3)*	0.0		0.0		–		ns
t_{OUTCO} *(3)*	0.5	3.3	0.5	4.1	–	–	ns
t_{PCISU}	2.4		2.9		–		ns
t_{PCIH}	0.0		0.0		–		ns
t_{PCICO}	2.0	6.0	2.0	7.7	–	–	ns

Table 50. EP1K50 External Bidirectional Timing Parameters *Note (1)*

Symbol	Speed Grade						Unit
	-1		-2		-3		
	Min	Max	Min	Max	Min	Max	
$t_{INSUBIDIR}$ *(2)*	2.7		3.2		4.3		ns
$t_{INHBIDIR}$ *(2)*	0.0		0.0		0.0		ns
$t_{INSUBIDIR}$ *(3)*	3.7		4.2		–		ns
$t_{INHBIDIR}$ *(3)*	0.0		0.0		–		ns
$t_{OUTCOBIDIR}$ *(2)*	2.0	4.5	2.0	5.2	2.0	7.3	ns
$t_{XZBIDIR}$ *(2)*		6.8		7.8		10.1	ns
$t_{ZXBIDIR}$ *(2)*		6.8		7.8		10.1	ns
$t_{OUTCOBIDIR}$ *(3)*	0.5	3.5	0.5	4.2	–	–	
$t_{XZBIDIR}$ *(3)*		6.8		8.4		–	ns
$t_{ZXBIDIR}$ *(3)*		6.8		8.4		–	ns

Notes to tables:

(1) All timing parameters are described in Tables 22 through 29.
(2) This parameter is measured without use of the ClockLock or ClockBoost circuits.
(3) This parameter is measured with use of the ClockLock or ClockBoost circuits

Tables 51 through 57 show EP1K100 device internal and external timing parameters.

Table 51. EP1K100 Device LE Timing Microparameters *Note (1)*

Symbol	Speed Grade						Unit
	-1		-2		-3		
	Min	Max	Min	Max	Min	Max	
t_{LUT}		0.7		1.0		1.5	ns
t_{CLUT}		0.5		0.7		0.9	ns
t_{RLUT}		0.6		0.8		1.1	ns
t_{PACKED}		0.3		0.4		0.5	ns
t_{EN}		0.2		0.3		0.3	ns
t_{CICO}		0.1		0.1		0.2	ns
t_{CGEN}		0.4		0.5		0.7	ns
t_{CGENR}		0.1		0.1		0.2	ns
t_{CASC}		0.6		0.9		1.2	ns
t_{C}		0.8		1.0		1.4	ns
t_{CO}		0.6		0.8		1.1	ns
t_{COMB}		0.4		0.5		0.7	ns
t_{SU}	0.4		0.6		0.7		ns
t_{H}	0.5		0.7		0.9		ns
t_{PRE}		0.8		1.0		1.4	ns
t_{CLR}		0.8		1.0		1.4	ns
t_{CH}	1.5		2.0		2.5		ns
t_{CL}	1.5		2.0		2.5		ns

Table 52. EP1K100 Device IOE Timing Microparameters *Note (1)*

Symbol	Speed Grade						Unit
	-1		-2		-3		
	Min	Max	Min	Max	Min	Max	
t_{IOD}		1.7		2.0		2.6	ns
t_{IOC}		0.0		0.0		0.0	ns
t_{IOCO}		1.4		1.6		2.1	ns
t_{IOCOMB}		0.5		0.7		0.9	ns
t_{IOSU}	0.8		1.0		1.3		ns
t_{IOH}	0.7		0.9		1.2		ns
t_{IOCLR}		0.5		0.7		0.9	ns
t_{OD1}		3.0		4.2		5.6	ns
t_{OD2}		3.0		4.2		5.6	ns
t_{OD3}		4.0		5.5		7.3	ns
t_{XZ}		3.5		4.6		6.1	ns
t_{ZX1}		3.5		4.6		6.1	ns
t_{ZX2}		3.5		4.6		6.1	ns
t_{ZX3}		4.5		5.9		7.8	ns
t_{INREG}		2.0		2.6		3.5	ns
t_{IOFD}		0.5		0.8		1.2	ns
t_{INCOMB}		0.5		0.8		1.2	ns

Table 53. EP1K100 Device EAB Internal Microparameters *Note (1)*

Symbol	Speed Grade						Unit
	-1		-2		-3		
	Min	Max	Min	Max	Min	Max	
$t_{EABDATA1}$		1.5		2.0		2.6	ns
$t_{EABDATA1}$		0.0		0.0		0.0	ns
t_{EABWE1}		1.5		2.0		2.6	ns
t_{EABWE2}		0.3		0.4		0.5	ns
t_{EABRE1}		0.3		0.4		0.5	ns
t_{EABRE2}		0.0		0.0		0.0	ns
t_{EABCLK}		0.0		0.0		0.0	ns
t_{EABCO}		0.3		0.4		0.5	ns
$t_{EABBYPASS}$		0.1		0.1		0.2	ns
t_{EABSU}	0.8		1.0		1.4		ns
t_{EABH}	0.1		0.1		0.2		ns
t_{EABCLR}	0.3		0.4		0.5		ns
t_{AA}		4.0		5.1		6.6	ns
t_{WP}	2.7		3.5		4.7		ns
t_{RP}	1.0		1.3		1.7		ns
t_{WDSU}	1.0		1.3		1.7		ns
t_{WDH}	0.2		0.2		0.3		ns
t_{WASU}	1.6		2.1		2.8		ns
t_{WAH}	1.6		2.1		2.8		ns
t_{RASU}	3.0		3.9		5.2		ns
t_{RAH}	0.1		0.1		0.2		ns
t_{WO}		1.5		2.0		2.6	ns
t_{DD}		1.5		2.0		2.6	ns
t_{EABOUT}		0.2		0.3		0.3	ns
t_{EABCH}	1.5		2.0		2.5		ns
t_{EABCL}	2.7		3.5		4.7		ns

Table 54. EP1K100 Device EAB Internal Timing Macroparameters *Note (1)*

Symbol	Speed Grade						Unit
	-1		-2		-3		
	Min	Max	Min	Max	Min	Max	
t_{EABAA}		5.9		7.6		9.9	ns
$t_{EABRCOMB}$	5.9		7.6		9.9		ns
$t_{EABRCREG}$	5.1		6.5		8.5		ns
t_{EABWP}	2.7		3.5		4.7		ns
$t_{EABWCOMB}$	5.9		7.7		10.3		ns
$t_{EABWCREG}$	5.4		7.0		9.4		ns
t_{EABDD}		3.4		4.5		5.9	ns
$t_{EABDATACO}$		0.5		0.7		0.8	ns
$t_{EABDATASU}$	0.8		1.0		1.4		ns
$t_{EABDATAH}$	0.1		0.1		0.2		ns
$t_{EABWESU}$	1.1		1.4		1.9		ns
t_{EABWEH}	0.0		0.0		0.0		ns
$t_{EABWDSU}$	1.0		1.3		1.7		ns
t_{EABWDH}	0.2		0.2		0.3		ns
$t_{EABWASU}$	4.1		5.2		6.8		ns
t_{EABWAH}	0.0		0.0		0.0		ns
t_{EABWO}		3.4		4.5		5.9	ns

Table 55. EP1K100 Device Interconnect Timing Microparameters *Note (1)*

Symbol	Speed Grade						Unit
	-1		-2		-3		
	Min	Max	Min	Max	Min	Max	
$t_{DIN2IOE}$		3.1		3.6		4.4	ns
t_{DIN2LE}		0.3		0.4		0.5	ns
$t_{DIN2DATA}$		1.6		1.8		2.0	ns
$t_{DCLK2IOE}$		0.8		1.1		1.4	ns
$t_{DCLK2LE}$		0.3		0.4		0.5	ns
$t_{SAMELAB}$		0.1		0.1		0.2	ns
$t_{SAMEROW}$		1.5		2.5		3.4	ns
$t_{SAMECOLUMN}$		0.4		1.0		1.6	ns
$t_{DIFFROW}$		1.9		3.5		5.0	ns
$t_{TWOROWS}$		3.4		6.0		8.4	ns
$t_{LEPERIPH}$		4.3		5.4		6.5	ns
$t_{LABCARRY}$		0.5		0.7		0.9	ns
$t_{LABCASC}$		0.8		1.0		1.4	ns

Table 56. EP1K100 External Timing Parameters *Notes (1), (2)*

Symbol	Speed Grade						Unit
	-1		-2		-3		
	Min	Max	Min	Max	Min	Max	
t_{DRR}		9.0		12.0		16.0	ns
t_{INSU} *(3)*	2.0		2.5		3.3		ns
t_{INH} *(3)*	0.0		0.0		0.0		ns
t_{OUTCO} *(3)*	2.0	5.2	2.0	6.9	2.0	9.1	ns
t_{INSU} *(4)*	2.0		2.2		–		ns
t_{INH} *(4)*	0.0		0.0		–		ns
t_{OUTCO} *(4)*	0.5	3.0	0.5	4.6	–	–	ns
t_{PCISU}	3.0		6.2		–		ns
t_{PCIH}	0.0		0.0		–		ns
t_{PCICO}	2.0	6.0	2.0	6.9	–	–	ns

Table 57. EP1K100 External Bidirectional Timing Parameters *Notes (1), (2)*

Symbol	Speed Grade						Unit
	-1		-2		-3		
	Min	Max	Min	Max	Min	Max	
$t_{INSUBIDIR}$ *(3)*	1.7		2.5		3.3		ns
$t_{INHBIDIR}$ *(3)*	0.0		0.0		0.0		ns
$t_{INSUBIDIR}$ *(4)*	2.0		2.8		–		ns
$t_{INHBIDIR}$ *(4)*	0.0		0.0		–		ns
$t_{OUTCOBIDIR}$ *(3)*	2.0	5.2	2.0	6.9	2.0	9.1	ns
$t_{XZBIDIR}$ *(3)*		5.6		7.5		10.1	ns
$t_{ZXBIDIR}$ *(3)*		5.6		7.5		10.1	ns
$t_{OUTCOBIDIR}$ *(4)*	0.5	3.0	0.5	4.6	–	–	ns
$t_{XZBIDIR}$ *(4)*		4.6		6.5		–	ns
$t_{ZXBIDIR}$ *(4)*		4.6		6.5		–	ns

Notes to tables:

(1) All timing parameters are described in Tables 22 through 29 in this data sheet.
(2) These parameters are specified by characterization.
(3) This parameter is measured without the use of the ClockLock or ClockBoost circuits.
(4) This parameter is measured with the use of the ClockLock or ClockBoost circuits.

Power Consumption

The supply power (P) for ACEX 1K devices can be calculated with the following equation:

$$P = P_{INT} + P_{IO} = (I_{CCSTANDBY} + I_{CCACTIVE}) \times V_{CC} + P_{IO}$$

The $I_{CCACTIVE}$ value depends on the switching frequency and the application logic. This value is calculated based on the amount of current that each LE typically consumes. The P_{IO} value, which depends on the device output load characteristics and switching frequency, can be calculated using the guidelines given in *Application Note 74 (Evaluating Power for Altera Devices).*

☞ Compared to the rest of the device, the embedded array consumes a negligible amount of power. Therefore, the embedded array can be ignored when calculating supply current.

The $I_{CCACTIVE}$ value can be calculated with the following equation:

$$I_{CCACTIVE} = K \times \mathbf{f_{MAX}} \times N \times \mathbf{tog_{LC}} \ (\mu A)$$

Where:

$\mathbf{f_{MAX}}$	=	Maximum operating frequency in MHz
N	=	Total number of LEs used in the device
$\mathbf{tog_{LC}}$	=	Average percent of LEs toggling at each clock (typically 12.5%)
K	=	Constant

Table 58 provides the constant (K) values for ACEX 1K devices.

Table 58. ACEX 1K Constant Values

Device	K Value
EP1K10	4.5
EP1K30	4.5
EP1K50	4.5
EP1K100	4.5

This supply power calculation provides an I_{CC} estimate based on typical conditions with no output load. The actual I_{CC} should be verified during operation because this measurement is sensitive to the actual pattern in the device and the environmental operating conditions.

To better reflect actual designs, the power model (and the constant K in the power calculation equations) for continuous interconnect ACEX 1K devices assumes that LEs drive FastTrack Interconnect channels. In contrast, the power model of segmented FPGAs assumes that all LEs drive only one short interconnect segment. This assumption may lead to inaccurate results when compared to measured power consumption for actual designs in segmented FPGAs.

Figure 31 shows the relationship between the current and operating frequency of ACEX 1K devices. For information on other ACEX 1K devices, contact Altera Applications at (800) 800-EPLD.

Figure 31. ACEX 1K $I_{CCACTIVE}$ vs. Operating Frequency

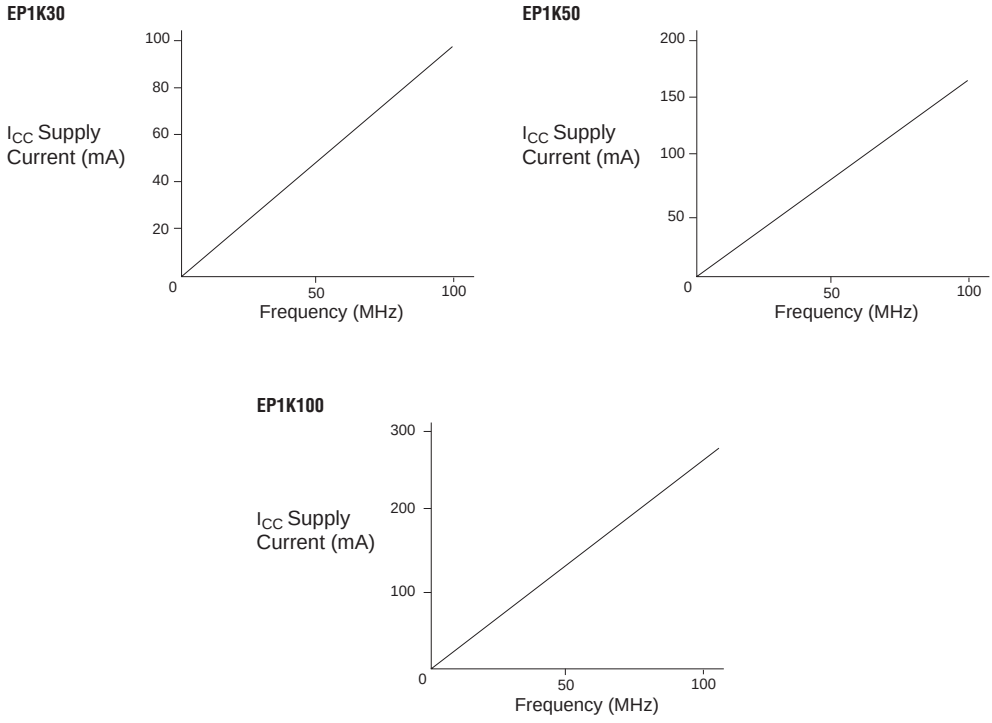

Configuration & Operation

The ACEX 1K architecture supports several configuration schemes. This section summarizes the device operating modes and available device configuration schemes.

Operating Modes

The ACEX 1K architecture uses SRAM configuration elements that require configuration data to be loaded every time the circuit powers up. The process of physically loading the SRAM data into the device is called *configuration*. Before configuration, as V_{CC} rises, the device initiates a Power-On Reset (POR). This POR event clears the device and prepares it for configuration. The ACEX 1K POR time does not exceed 50 µs.

☞ When configuring with a configuration device, refer to the relevant configuration device data sheet for POR timing information.

During initialization, which occurs immediately after configuration, the device resets registers, enables I/O pins, and begins to operate as a logic device. Before and during configuration, all I/O pins (except dedicated inputs, clock, or configuration pins) are pulled high by a weak pull-up resistor. Together, the configuration and initialization processes are called *command mode*; normal device operation is called *user mode*.

SRAM configuration elements allow ACEX 1K devices to be reconfigured in-circuit by loading new configuration data into the device. Real-time reconfiguration is performed by forcing the device into command mode with a device pin, loading different configuration data, re-initializing the device, and resuming user-mode operation. The entire reconfiguration process requires less than 40 ms and can be used to reconfigure an entire system dynamically. In-field upgrades can be performed by distributing new configuration files.

Configuration Schemes

The configuration data for an ACEX 1K device can be loaded with one of five configuration schemes (see Table 59), chosen on the basis of the target application. An EPC16, EPC2, EPC1, or EPC1441 configuration device, intelligent controller, or the JTAG port can be used to control the configuration of a ACEX 1K device, allowing automatic configuration on system power-up.

Multiple ACEX 1K devices can be configured in any of the five configuration schemes by connecting the configuration enable (nCE) and configuration enable output (nCEO) pins on each device. Additional APEX 20K, APEX 20KE, FLEX 10K, FLEX 10KA, FLEX 10KE, ACEX 1K, and FLEX 6000 devices can be configured in the same serial chain.

Table 59. Data Sources for ACEX 1K Configuration

Configuration Scheme	Data Source
Configuration device	EPC16, EPC2, EPC1, or EPC1441 configuration device
Passive serial (PS)	BitBlaster or ByteBlasterMV download cables, or serial data source
Passive parallel asynchronous (PPA)	Parallel data source
Passive parallel synchronous (PPS)	Parallel data source
JTAG	BitBlaster or ByteBlasterMV download cables, or microprocessor with a Jam STAPL File or JBC File

Device Pin-Outs

See the Altera web site (**http://www.altera.com**) or the ***Altera Documentation Library*** for pin-out information.

Revision History

The information contained in the *ACEX 1K Programmable Logic Device Family Data Sheet* version 3.4 supersedes information published in previous versions.

The following changes were made to the *ACEX 1K Programmable Logic Device Family Data Sheet* version 3.4: added extended temperature support.

101 Innovation Drive
San Jose, CA 95134
(408) 544-7000
www.altera.com
Applications Hotline:
(800) 800-EPLD
Literature Services:
lit_req@altera.com

Copyright © 2003 Altera Corporation. All rights reserved. Altera, The Programmable Solutions Company, the stylized Altera logo, specific device designations, and all other words and logos that are identified as trademarks and/or service marks are, unless noted otherwise, the trademarks and service marks of Altera Corporation in the U.S. and other countries. All other product or service names are the property of their respective holders. Altera products are protected under numerous U.S. and foreign patents and pending applications, maskwork rights, and copyrights. Altera warrants performance of its semiconductor products to current specifications in accordance with Altera's standard warranty, but reserves the right to make changes to any products and services at any time without notice. Altera assumes no responsibility or liability arising out of the application or use of any information, product, or service described herein except as expressly agreed to in writing by Altera Corporation. Altera customers are advised to obtain the latest version of device specifications before relying on any published information and before placing orders for products or services.

I.S. EN ISO 9001

Printed on Recycled Paper.