THE DATASHEET OF

TXS0104ERGYR

TXS0104E 4-Bit Bidirectional Voltage-Level Translator For Open-Drain and Push-Pull Applications

1 Features

- No Direction-Control Signal Needed
- Max Data Rates
  - 24 Mbps (Push Pull)
  - 2 Mbps (Open Drain)
- Available in the Texas Instruments NanoFree™ Package
- 1.65 V to 3.6 V on A port and 2.3 V to 5.5 V on B port ($V_{CCA} \leq V_{CCB}$)
- No Power-Supply Sequencing Required – V_{CCA} or V_{CCB} Can Be Ramped First
- Latch-Up Performance Exceeds 100 mA Per JESD 78, Class II
- ESD Protection Exceeds JESD 22
  - A Port
    - 2000-V Human-Body Model (A114-B)
    - 200-V Machine Model (A115-A)
    - 1000-V Charged-Device Model (C101)
  - B Port
    - 15-kV Human-Body Model (A114-B)
    - 200-V Machine Model (A115-A)
    - 1000-V Charged-Device Model (C101)
- IEC 61000-4-2 ESD (B Port)
  - ±8-kV Contact Discharge
  - ±10-kV Air-Gap Discharge

2 Applications

- Handset
- Smartphone
- Tablet
- Desktop PC

3 Description

This 4-bit non-inverting translator uses two separate configurable power-supply rails. The A port is designed to track V_{CCA}. V_{CCA} accepts any supply voltage from 1.65 V to 3.6 V. V_{CCA} must be less than or equal to V_{CCB}. The B port is designed to track V_{CCB}. V_{CCB} accepts any supply voltage from 2.3 V to 5.5 V. This allows for low-voltage bidirectional translation between any of the 1.8-V, 2.5-V, 3.3-V, and 5-V voltage nodes.

When the output-enable (OE) input is low, all outputs are placed in the high-impedance state.

The TXS0104E is designed so that the OE input circuit is supplied by V_{CCA}.

To ensure the high-impedance state during power up or power down, OE should be tied to GND through a pulldown resistor; the minimum value of the resistor is determined by the current-sourcing capability of the driver.

Device Information(1)

PART NUMBER	PACKAGE	BODY SIZE (NOM)
TXS0104E	SOIC (14)	8.65 mm × 3.91 mm
	TSSOP (14)	5.00 mm × 4.40 mm
	BGA (12)	2.00 mm × 2.50 mm
	VQFN (14)	3.50 mm × 3.50 mm
	DSBGA (12)	1.90 mm × 1.90 mm

(1) For all available packages, see the orderable addendum at the end of the datasheet.

Transfer Characteristics of an N-Channel Transistor

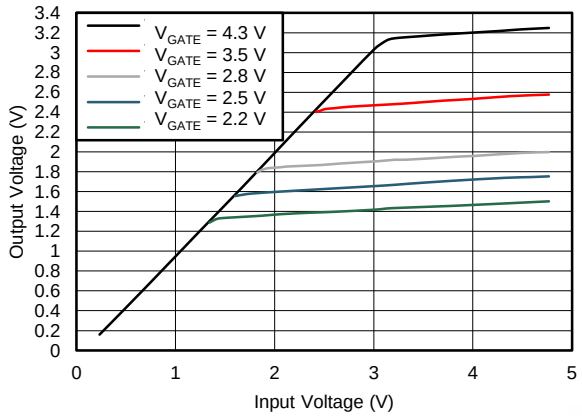

An IMPORTANT NOTICE at the end of this data sheet addresses availability, warranty, changes, use in safety-critical applications, intellectual property matters and other important disclaimers. PRODUCTION DATA.

Table of Contents

1 Features ... 1
2 Applications ... 1
3 Description ... 1
4 Revision History ... 2
5 Pin Configuration and Functions ... 3
6 Specifications ... 5
6.1 Absolute Maximum Ratings ... 5
6.2 Handling Ratings ... 5
6.3 Recommended Operating Conditions ... 6
6.4 Thermal Information: GXU, ZXU, and YZT ... 6
6.5 Thermal Information: D, PW, and RGY ... 6
6.6 Electrical Characteristics ... 7
6.7 Timing Requirements: V_{CCA} = 1.8 V ± 0.15 V ... 8
6.8 Timing Requirements: V_{CCA} = 2.5 V ± 0.2 V ... 8
6.9 Timing Requirements: V_{CCA} = 3.3 V ± 0.3 V ... 8
6.10 Switching Characteristics: V_{CCA} = 1.8 V ± 0.15 V ... 9
6.11 Switching Characteristics: V_{CCA} = 2.5 V ± 0.2 V ... 10
6.12 Switching Characteristics: V_{CCA} = 3.3 V ± 0.3 V ... 11
6.13 Typical Characteristics ... 12
7 Parameter Measurement Information ... 13
7.1 Load Circuits ... 13
7.2 Voltage Waveforms ... 14
8 Detailed Description ... 15
8.1 Overview ... 15
8.2 Functional Block Diagram ... 15
8.3 Feature Description ... 16
8.4 Device Functional Modes ... 16
9 Application and Implementation ... 17
9.1 Application Information ... 17
9.2 Typical Application ... 17
10 Power Supply Recommendations ... 19
11 Layout ... 19
11.1 Layout Guidelines ... 19
11.2 Layout Example ... 19
12 Device and Documentation Support ... 20
12.1 Trademarks ... 20
12.2 Electrostatic Discharge Caution ... 20
12.3 Glossary ... 20
13 Mechanical, Packaging, and Orderable Information ... 20

4 Revision History

NOTE: Page numbers for previous revisions may differ from page numbers in the current version.

Changes from Revision E (August 2013) to Revision F **Page**

- Added *Pin Configuration and Functions* section, *Handling Rating* table, *Feature Description* section, *Device Functional Modes*, *Application and Implementation* section, *Power Supply Recommendations* section, *Layout* section, *Device and Documentation Support* section, and *Mechanical, Packaging, and Orderable Information* section ... 1
- Deleted the Package thermal impedance information from the Absolute max ratings table into the Thermal Information table. Moved the T_{stg} row into the new Handling Ratings table. ... 5
- Changed the last 2 rows of MIN MAX (24 MAX and 2 MAX) to the MIN columns, in the first switching characteristics table ... 9

Changes from Revision D (May 2008) to Revision E **Page**

- Deleted the ordering table ... 1

Copyright © 2006–2014, Texas Instruments Incorporated

5 Pin Configuration and Functions

GXU and ZXU Package
12-Pin MICROSTAR JUNIOR
Top View

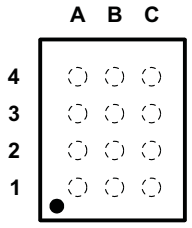

YZT Package
12-Pin DSBGA
Top View

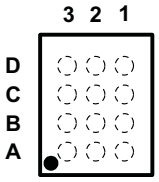

RGY Package
14-Pin VQFN
Top View

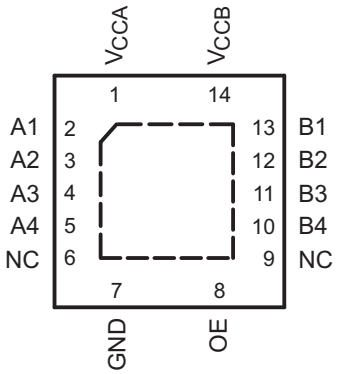

NOTE: NC - No internal connection

D and PW Package
14-Pin SOIC
Top View

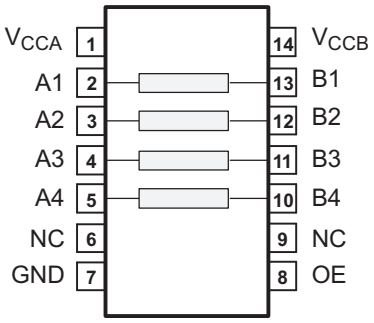

NOTE: NC - No internal connection

Pin Functions: D, PW, or RGY

PIN		TYPE	DESCRIPTION
NAME	NO.		
A1	2	I/O	Input/output A1. Referenced to V_{CCA}.
A2	3	I/O	Input/output A2. Referenced to V_{CCA}.
A3	4	I/O	Input/output A3. Referenced to V_{CCA}.
A4	5	I/O	Input/output A4. Referenced to V_{CCA}.
B1	13	I/O	Input/output B1. Referenced to V_{CCB}.
B2	12	I/O	Input/output B2. Referenced to V_{CCB}.
B3	11	I/O	Input/output B3. Referenced to V_{CCB}.
B4	10	I/O	Input/output B4. Referenced to V_{CCB}.
GND	7	S	Ground
NC	6	N/A	No connection. Not internally connected.
NC	9	N/A	No connection. Not internally connected.
OE	8	I	3-state output-mode enable. Pull OE low to place all outputs in 3-state mode. Referenced to V_{CCA}.
V_{CCA}	1	S	A-port supply voltage. 1.65 V ≤ V_{CCA} ≤ 3.6 V and V_{CCA} ≤ V_{CCB}.
V_{CCB}	14	S	B-port supply voltage. 2.3 V ≤ V_{CCB} ≤ 5.5 V.
Thermal Pad	–	–	For the RGY package, the exposed center thermal pad must be connected to ground

Copyright © 2006–2014, Texas Instruments Incorporated

Pin Functions: BGA

PIN		TYPE	DESCRIPTION
NAME	NO.		
A1	A1	I/O	Input/output A1. Referenced to V_{CCA}.
A2	A2	I/O	Input/output A2. Referenced to V_{CCA}.
A3	A3	I/O	Input/output A3. Referenced to V_{CCA}.
A4	A4	I/O	Input/output A4. Referenced to V_{CCA}.
B1	C1	I/O	Input/output B1. Referenced to V_{CCB}.
B2	C2	I/O	Input/output B2. Referenced to V_{CCB}.
B3	C3	I/O	Input/output B3. Referenced to V_{CCB}.
B4	C4	I/O	Input/output B4. Referenced to V_{CCB}.
GND	B4	S	Ground
NC	–	N/A	No connection. Not internally connected.
NC	–	N/A	No connection. Not internally connected.
OE	B3	I	3-state output-mode enable. Pull OE low to place all outputs in 3-state mode. Referenced to V_{CCA}.
V_{CCA}	B2	S	A-port supply voltage. 1.65 V ≤ V_{CCA} ≤ 3.6 V and V_{CCA} ≤ V_{CCB}.
V_{CCB}	B1	S	B-port supply voltage. 2.3 V ≤ V_{CCB} ≤ 5.5 V.

Pin Functions: DSBGA

PIN		TYPE	DESCRIPTION
NAME	NO.		
A1	A3	I/O	Input/output A1. Referenced to V_{CCA}.
A2	B3	I/O	Input/output A2. Referenced to V_{CCA}.
A3	C3	I/O	Input/output A3. Referenced to V_{CCA}.
A4	D3	I/O	Input/output A4. Referenced to V_{CCA}.
B1	A1	I/O	Input/output B1. Referenced to V_{CCB}.
B2	B1	I/O	Input/output B2. Referenced to V_{CCB}.
B3	C1	I/O	Input/output B3. Referenced to V_{CCB}.
B4	D1	I/O	Input/output B4. Referenced to V_{CCB}.
GND	D2	S	Ground
NC	–	N/A	No connection. Not internally connected.
NC	–	N/A	No connection. Not internally connected.
OE	C2	I	3-state output-mode enable. Pull OE low to place all outputs in 3-state mode. Referenced to V_{CCA}.
V_{CCA}	B2	S	A-port supply voltage. 1.65 V ≤ V_{CCA} ≤ 3.6 V and V_{CCA} ≤ V_{CCB}.
V_{CCB}	A2	S	B-port supply voltage. 2.3 V ≤ V_{CCB} ≤ 5.5 V.

Copyright © 2006–2014, Texas Instruments Incorporated

6 Specifications

6.1 Absolute Maximum Ratings(1)

over operating free-air temperature range (unless otherwise noted)

			MIN	MAX	UNIT
V_{CCA}	Supply voltage range		–0.5	4.6	V
V_{CCB}			–0.5	6.5	
V_I	Input voltage range(2)	A port	–0.5	4.6	V
		B port	–0.5	6.5	
V_O	Voltage range applied to any output in the high-impedance or power-off state(2)	A port	–0.5	4.6	V
		B port	–0.5	6.5	
V_O	Voltage range applied to any output in the high or low state(2) (3)	A port	–0.5	V_{CCA} + 0.5	V
		B port	–0.5	V_{CCB} + 0.5	
I_{IK}	Input clamp current	V_I < 0		–50	mA
I_{OK}	Output clamp current	V_O < 0		–50	mA
I_O	Continuous output current		–50	50	mA
	Continuous current through each V_{CCA}, V_{CCB}, or GND		–100	100	mA

(1) Stresses beyond those listed under Absolute Maximum Ratings may cause permanent damage to the device. These are stress ratings only, and functional operation of the device at these or any other conditions beyond those indicated under Recommended Operating Conditions is not implied. Exposure to absolute-maximum-rated conditions for extended periods may affect device reliability.
(2) The input and output negative-voltage ratings may be exceeded if the input and output current ratings are observed.
(3) The value of V_{CCA} and V_{CCB} are provided in the recommended operating conditions table.

6.2 Handling Ratings

				MIN	MAX	UNIT
T_{stg}	Storage temperature range			–65	150	°C
$V_{(ESD)}$	Electrostatic discharge	Human body model (HBM), per ANSI/ESDA/JEDEC JS-001, all pins(1)	A Port		2000	V
			B Port		15	kV
		Charged device model (CDM), per JEDEC specification JESD22-C101, all pins(2)	A Port		1000	V
			B Port			
		Machine model (MM)	A Port		200	
			B Port			

(1) JEDEC document JEP155 states that 500-V HBM allows safe manufacturing with a standard ESD control process.
(2) JEDEC document JEP157 states that 250-V CDM allows safe manufacturing with a standard ESD control process.

Copyright © 2006–2014, Texas Instruments Incorporated

6.3 Recommended Operating Conditions[1][2]

			V_{CCA}	V_{CCB}	MIN	MAX	UNIT
V_{CCA}	Supply voltage[3]				1.65	3.6	V
V_{CCB}					2.3	5.5	
V_{IH}	High-level input voltage	A-port I/Os	1.65 V to 1.95 V	2.3 V to 5.5 V	V_{CCI} – 0.2	V_{CCI}	V
			2.3 V to 3.6 V		V_{CCI} – 0.4	V_{CCI}	
		B-port I/Os	1.65 V to 3.6 V	2.3 V to 5.5 V	V_{CCI} – 0.4	V_{CCI}	
		OE input			V_{CCA} × 0.65	5.5	
V_{IL}	Low-level input voltage	A-port I/Os	1.65 V to 3.6 V	2.3 V to 5.5 V	0	0.15	V
		B-port I/Os			0	0.15	
		OE input			0	V_{CCA} × 0.35	
Δt/Δv	Input transition rise or fall rate	A-port I/Os, push-pull driving	1.65 V to 3.6 V	2.3 V to 5.5 V		10	ns/V
		B-port I/Os, push-pull driving				10	
		Control input				10	
T_A	Operating free-air temperature				–40	85	°C

(1) V_{CCI} is the supply voltage associated with the input port.
(2) V_{CCO} is the supply voltage associated with the output port.
(3) V_{CCA} must be less than or equal to V_{CCB}, and V_{CCA} must not exceed 3.6 V.

6.4 Thermal Information: GXU, ZXU, and YZT

THERMAL METRIC[1]		TXS0104E		UNIT
		GXU/ZXU (12)[2]	YZT (12)	
$R_{\theta JA}$	Junction-to-ambient thermal resistance	132.0	89.2	°C/W
$R_{\theta JC(top)}$	Junction-to-case (top) thermal resistance	98.4	0.9	
$R_{\theta JB}$	Junction-to-board thermal resistance	68.7	14.4	
ψ_{JT}	Junction-to-top characterization parameter	3.1	3.0	
ψ_{JB}	Junction-to-board characterization parameter	68.2	14.4	

(1) For more information about traditional and new thermal metrics, see the *IC Package Thermal Metrics* application report, SPRA953.
(2) The package thermal impedance is calculated in accordance with JESD 51-7.

6.5 Thermal Information: D, PW, and RGY

THERMAL METRIC[1]		TXS0104E			UNIT
		D(14)[1]	PW(14)[2]	RGY(14)[3]	
$R_{\theta JA}$	Junction-to-ambient thermal resistance	90.4	120.1	56.1	°C/W
$R_{\theta JC(top)}$	Junction-to-case (top) thermal resistance	50.1	49.4	68.8	
$R_{\theta JB}$	Junction-to-board thermal resistance	45.0	61.8	32.1	
ψ_{JT}	Junction-to-top characterization parameter	14.4	6.2	3.1	
ψ_{JB}	Junction-to-board characterization parameter	44.7	61.2	32.3	
$R_{\theta JC(bot)}$	Junction-to-case (bottom) thermal resistance	–	–	12.8	

(1) For more information about traditional and new thermal metrics, see the *IC Package Thermal Metrics* application report, SPRA953.
(2) The package thermal impedance is calculated in accordance with JESD 51-7.
(3) The package thermal impedance is calculated in accordance with JESD 51-5.

Copyright © 2006–2014, Texas Instruments Incorporated

6.6 Electrical Characteristics

over recommended operating free-air temperature range (unless otherwise noted) (1)(2)(3)

		TEST CONDITIONS	V_{CCA}	V_{CCB}	T_A = 25°C			T_A = 25°C to 85°C		UNIT
					MIN	TYP	MAX	MIN	MAX	
V_{OHA}		I_{OH} = –20 μA, V_{IB} ≥ V_{CCB} – 0.4 V	1.65 V to 3.6 V	2.3 V to 5.5 V				V_{CCA} × 0.8		V
V_{OLA}		I_{OL} = 1 mA, V_{IB} ≤ 0.15 V	1.65 V to 3.6 V	2.3 V to 5.5 V					0.4	V
V_{OHB}		I_{OH} = –20 μA, V_{IA} ≥ V_{CCA} – 0.2 V	1.65 V to 3.6 V	2.3 V to 5.5 V				V_{CCB} × 0.8		V
V_{OLB}		I_{OL} = 1 mA, V_{IA} ≤ 0.15 V	1.65 V to 3.6 V	2.3 V to 5.5 V					0.4	V
I_I	OE	V_I = V_{CCI} or GND	1.65 V to 3.6 V	2.3 V to 5.5 V	–1		1	–2	2	μA
I_{OZ}	A or B port	OE = V_{IL}	1.65 V to 3.6 V	2.3 V to 5.5 V	–1		1	–2	2	μA
I_{CCA}		V_I = V_O = Open, I_O = 0	1.65 V to V_{CCB}	2.3 V to 5.5 V					2.4	μA
			3.6 V	0					2.2	
			0	5.5 V					–1	
I_{CCB}		V_I = V_O = Open, I_O = 0	1.65 V to V_{CCB}	2.3 V to 5.5 V					12	μA
			3.6 V	0					–1	
			0	5.5 V					1	
I_{CCA} + I_{CCB}		V_I = V_O = Open, I_O = 0	1.65 V to V_{CCB}	2.3 V to 5.5 V					14.4	μA
C_I	OE		3.3 V	3.3 V		2.5			3.5	pF
C_{io}	A port		3.3 V	3.3 V		5			6.5	pF
	B port					12			16.5	

(1) V_{CCI} is the supply voltage associated with the input port.
(2) V_{CCO} is the supply voltage associated with the output port.
(3) V_{CCA} must be less than or equal to V_{CCB}, and V_{CCA} must not exceed 3.6 V.

Copyright © 2006–2014, Texas Instruments Incorporated

6.7 Timing Requirements: V_{CCA} = 1.8 V ± 0.15 V

over recommended operating free-air temperature range, V_{CCA} = 1.8 V ± 0.15 V (unless otherwise noted)

				V_{CCB} = 2.5 V ± 0.2 V		V_{CCB} = 3.3 V ± 0.3 V		V_{CCB} = 5 V ± 0.5 V		UNIT
				MIN	MAX	MIN	MAX	MIN	MAX	
Data rate		Push-pull driving			24		24		24	Mbps
		Open-drain driving			2		2		2	
t_w	Pulse duration	Push-pull driving	Data inputs	41		41		41		ns
		Open-drain driving		500		500		500		

6.8 Timing Requirements: V_{CCA} = 2.5 V ± 0.2 V

over recommended operating free-air temperature range, V_{CCA} = 2.5 V ± 0.2 V (unless otherwise noted)

				V_{CCB} = 2.5 V ± 0.2 V		V_{CCB} = 3.3 V ± 0.3 V		V_{CCB} = 5 V ± 0.5 V		UNIT
				MIN	MAX	MIN	MAX	MIN	MAX	
Data rate		Push-pull driving			24		24		24	Mbps
		Open-drain driving			2		2		2	
t_w	Pulse duration	Push-pull driving	Data inputs	41		41		41		ns
		Open-drain driving		500		500		500		

6.9 Timing Requirements: V_{CCA} = 3.3 V ± 0.3 V

over recommended operating free-air temperature range, V_{CCA} = 3.3 V ± 0.3 V (unless otherwise noted)

				V_{CCB} = 3.3 V ± 0.3 V		V_{CCB} = 5 V ± 0.5 V		UNIT
				MIN	MAX	MIN	MAX	
Data rate		Push-pull driving			24		24	Mbps
		Open-drain driving			2		2	
t_w	Pulse duration	Push-pull driving	Data inputs	41		41		ns
		Open-drain driving		500		500		

Copyright © 2006–2014, Texas Instruments Incorporated

6.10 Switching Characteristics: V_{CCA} = 1.8 V ± 0.15 V

over recommended operating free-air temperature range, V_{CCA} = 1.8 V ± 0.15 V (unless otherwise noted)

	FROM (INPUT)	TO (OUTPUT)	TEST CONDITIONS	V_{CCB} = 2.5 V ± 0.2 V		V_{CCB} = 3.3 V ± 0.3 V		V_{CCB} = 5 V ± 0.5 V		UNIT
				MIN	MAX	MIN	MAX	MIN	MAX	
t_{PHL}	A	B	Push-pull driving		4.6		4.7		5.8	ns
			Open-drain driving	2.9	8.8	2.9	9.6	3	10	
t_{PLH}			Push-pull driving		6.8		6.8		7	
			Open-drain driving	45	260	36	208	27	198	
t_{PHL}	B	A	Push-pull driving		4.4		4.5		4.7	ns
			Open-drain driving	1.9	5.3	1.1	4.4	1.2	4	
t_{PLH}			Push-pull driving		5.3		4.5		0.5	
			Open-drain driving	45	175	36	140	27	102	
t_{en}	OE	A or B			200		200		200	ns
t_{dis}	OE	A or B			50		40		35	ns
t_{rA}	A-port rise time		Push-pull driving	3.2	9.5	2.3	9.3	2	7.6	ns
			Open-drain driving	38	165	30	132	22	95	
t_{rB}	B-port rise time		Push-pull driving	4	10.8	2.7	9.1	2.7	7.6	ns
			Open-drain driving	34	145	23	106	10	58	
t_{fA}	A-port fall time		Push-pull driving	2	5.9	1.9	6	1.7	13.3	ns
			Open-drain driving	4.4	6.9	4.3	6.4	4.2	6.1	
t_{fB}	B-port fall time		Push-pull driving	2.9	7.6	2.8	7.5	2.8	8.8	
			Open-drain driving	6.9	13.8	7.5	16.2	7	16.2	
$t_{SK(O)}$	Channel-to-channel skew				1		1		1	ns
Max data rate			Push-pull driving	24		24		24		Mbps
			Open-drain driving	2		2		2		

Copyright © 2006–2014, Texas Instruments Incorporated

6.11 Switching Characteristics: V_{CCA} = 2.5 V ± 0.2 V

over recommended operating free-air temperature range, V_{CCA} = 2.5 V ± 0.2 V (unless otherwise noted)

	FROM (INPUT)	TO (OUTPUT)	TEST CONDITIONS	V_{CCB} = 2.5 V ± 0.2 V		V_{CCB} = 3.3 V ± 0.3 V		V_{CCB} = 5 V ± 0.5 V		UNIT
				MIN	MAX	MIN	MAX	MIN	MAX	
t_{PHL}	A	B	Push-pull driving		3.2		3.3		3.4	ns
			Open-drain driving	1.7	6.3	2	6	2.1	5.8	
t_{PLH}			Push-pull driving		3.5		4.1		4.4	
			Open-drain driving	43	250	36	206	27	190	
t_{PHL}	B	A	Push-pull driving		3		3.6		4.3	ns
			Open-drain driving	1.8	4.7	2.6	4.2	1.2	4	
t_{PLH}			Push-pull driving		2.5		1.6		0.7	
			Open-drain driving	44	170	37	140	27	103	
t_{en}	OE	A or B			200		200		200	ns
t_{dis}	OE	A or B			50		40		35	ns
t_{rA}	A-port rise time		Push-pull driving	2.8	7.4	2.6	6.6	1.8	5.6	ns
			Open-drain driving	34	149	28	121	24	89	
t_{rB}	B-port rise time		Push-pull driving	3.2	8.3	2.9	7.2	2.4	6.1	ns
			Open-drain driving	35	151	24	112	12	64	
t_{fA}	A-port fall time		Push-pull driving	1.9	5.7	1.9	5.5	1.8	5.3	ns
			Open-drain driving	4.4	6.9	4.3	6.2	4.2	5.8	
t_{fB}	B-port fall time		Push-pull driving	2.2	7.8	2.4	6.7	2.6	6.6	ns
			Open-drain driving	5.1	8.8	5.4	9.4	5.4	10.4	
$t_{SK(O)}$	Channel-to-channel skew				1		1		1	ns
Max data rate			Push-pull driving	24		24		24		Mbps
			Open-drain driving	2		2		2		

Copyright © 2006–2014, Texas Instruments Incorporated

6.12 Switching Characteristics: V_{CCA} = 3.3 V ± 0.3 V

over recommended operating free-air temperature range, V_{CCA} = 3.3 V ± 0.3 V (unless otherwise noted)

	FROM (INPUT)	TO (OUTPUT)	TEST CONDITIONS	V_{CCB} = 3.3 V ± 0.3 V		V_{CCB} = 5 V ± 0.5 V		UNIT
				MIN	MAX	MIN	MAX	
t_{PHL}	A	B	Push-pull driving		2.4		3.1	ns
			Open-drain driving	1.3	4.2	1.4	4.6	
t_{PLH}			Push-pull driving		4.2		4.4	
			Open-drain driving	36	204	28	165	
t_{PHL}	B	A	Push-pull driving		2.5		3.3	ns
			Open-drain driving	1	124	1	97	
t_{PLH}			Push-pull driving		2.5		2.6	
			Open-drain driving	3	139	3	105	
t_{en}	OE	A or B			200		200	ns
t_{dis}	OE	A or B			40		35	ns
t_{rA}	A-port rise time		Push-pull driving	2.3	5.6	1.9	4.8	ns
			Open-drain driving	25	116	19	85	
t_{rB}	B-port rise time		Push-pull driving	2.5	6.4	2.1	7.4	ns
			Open-drain driving	26	116	14	72	
t_{fA}	A-port fall time		Push-pull driving	2	5.4	1.9	5	ns
			Open-drain driving	4.3	6.1	4.2	5.7	
t_{fB}	B-port fall time		Push-pull driving	2.3	7.4	2.4	7.6	ns
			Open-drain driving	5	7.6	4.8	8.3	
$t_{SK(O)}$	Channel-to-channel skew				1		1	ns
Max data rate			Push-pull driving	24		24		Mbps
			Open-drain driving	2		2		

Copyright © 2006–2014, Texas Instruments Incorporated

6.13 Typical Characteristics

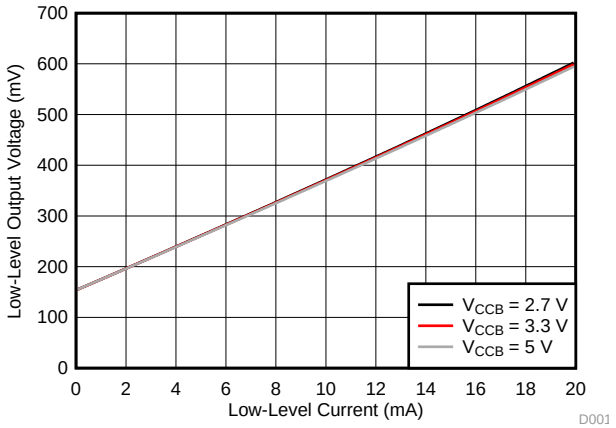

V_{CCA} = 1.8 V $V_{IL(A)}$ = 150 mV

Figure 1. Low-Level Output Voltage ($V_{OL(Ax)}$) vs Low-Level Current ($I_{OL(Ax)}$)

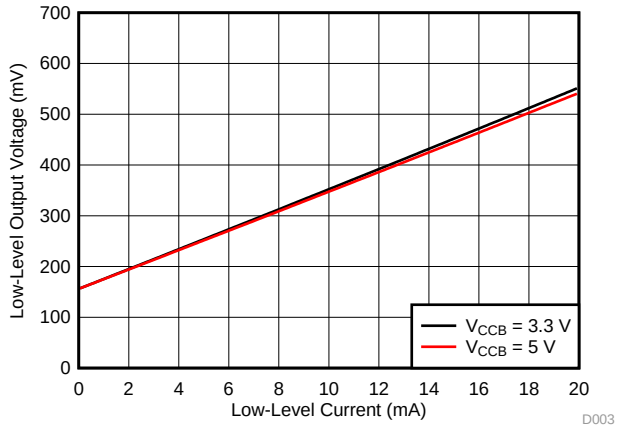

V_{CCA} = 2.7 V $V_{IL(A)}$ = 150 mV

Figure 2. Low-Level Output Voltage ($V_{OL(Ax)}$) vs Low-Level Current ($I_{OL(Ax)}$)

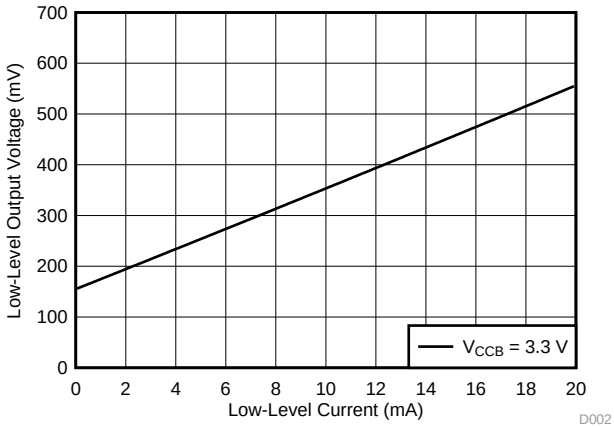

V_{CCA} = 3.3 V $V_{IL(A)}$ = 150 mV

Figure 3. Low-Level Output Voltage ($V_{OL(Ax)}$) vs Low-Level Current ($I_{OL(Ax)}$)

Copyright © 2006–2014, Texas Instruments Incorporated

7 Parameter Measurement Information

7.1 Load Circuits

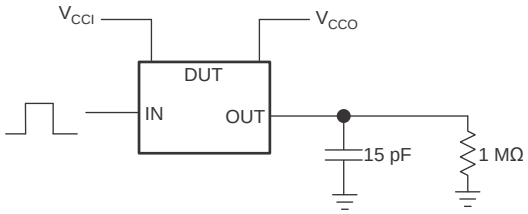

Figure 4. Data Rate, Pulse Duration, Propagation Delay, Output Rise-Time and Fall-Time Measurement Using a Push-Pull Driver

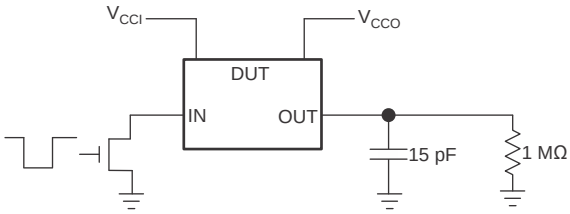

Figure 5. Data Rate, Pulse Duration, Propagation Delay, Output Rise-Time and Fall-Time Measurement Using an Open-Drain Driver

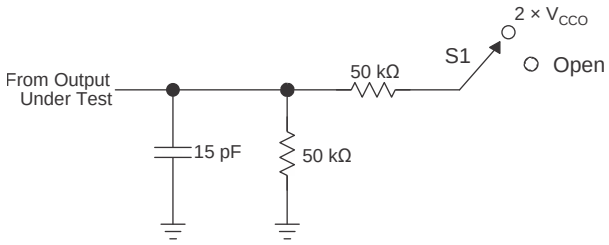

TEST	S1
t_{PZL} / t_{PLZ} (t_{dis})	2 × V_{CCO}
t_{PHZ} / t_{PZH} (t_{en})	Open

Figure 6. Load Circuit for Enable-Time and Disable-Time Measurement

1. t_{PLZ} and t_{PHZ} are the same as t_{dis}.
2. t_{PZL} and t_{PZH} are the same as t_{en}.
3. V_{CCI} is the V_{CC} associated with the input port.
4. V_{CCO} is the V_{CC} associated with the output port.

Copyright © 2006–2014, Texas Instruments Incorporated

7.2 Voltage Waveforms

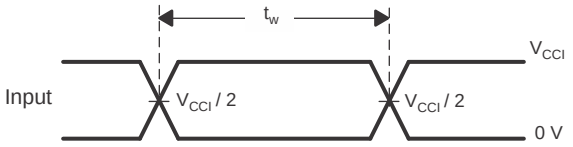

Figure 7. Pulse Duration

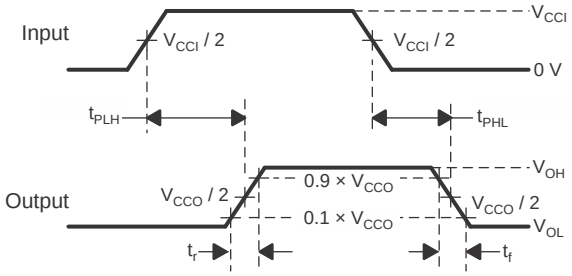

Figure 8. Propagation Delay Times

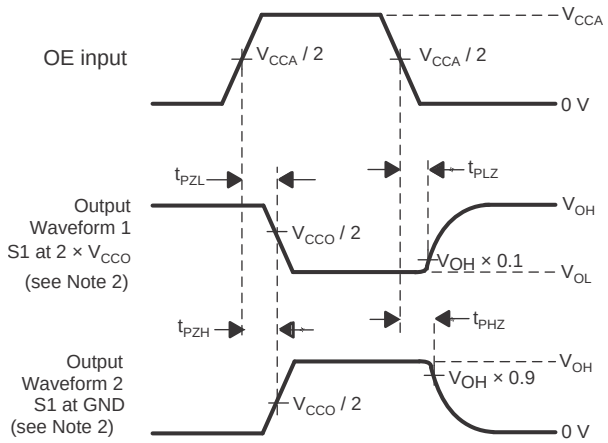

Figure 9. Enable and Disable Times

1. C_L includes probe and jig capacitance.
2. Waveform 1 in Figure 9 is for an output with internal such that the output is high, except when OE is high (see Figure 6). Waveform 2 in Figure 9 is for an output with conditions such that the output is low, except when OE is high.
3. All input pulses are supplied by generators having the following characteristics: PRR≤ 10 MHz, Z_O = 50 Ω, dv/dt ≥ 1 V/ns.
4. The outputs are measured one at a time, with one transition per measurement.
5. t_{PLZ} and t_{PHZ} are the same as t_{dis}.
6. t_{PZL} and t_{PZH} are the same as t_{en}.
7. t_{PLH} and t_{PHL} are the same as t_{pd}.
8. V_{CCI} is the V_{CC} associated with the input port.
9. V_{CCO} is the V_{CC} associated with the output port.

Copyright © 2006–2014, Texas Instruments Incorporated

8 Detailed Description

8.1 Overview

The TXS0104E device is a directionless voltage-level translator specifically designed for translating logic voltage levels. The A port is able to accept I/O voltages ranging from 1.65 V to 3.6 V, while the B port can accept I/O voltages from 2.3 V to 5.5 V. The device is a pass gate architecture with edge rate accelerators (one shots) to improve the overall data rate. 10-kΩ pullup resistors, commonly used in open drain applications, have been conveniently integrated so that an external resistor is not needed. While this device is designed for open drain applications, the device can also translate push-pull CMOS logic outputs.

8.2 Functional Block Diagram

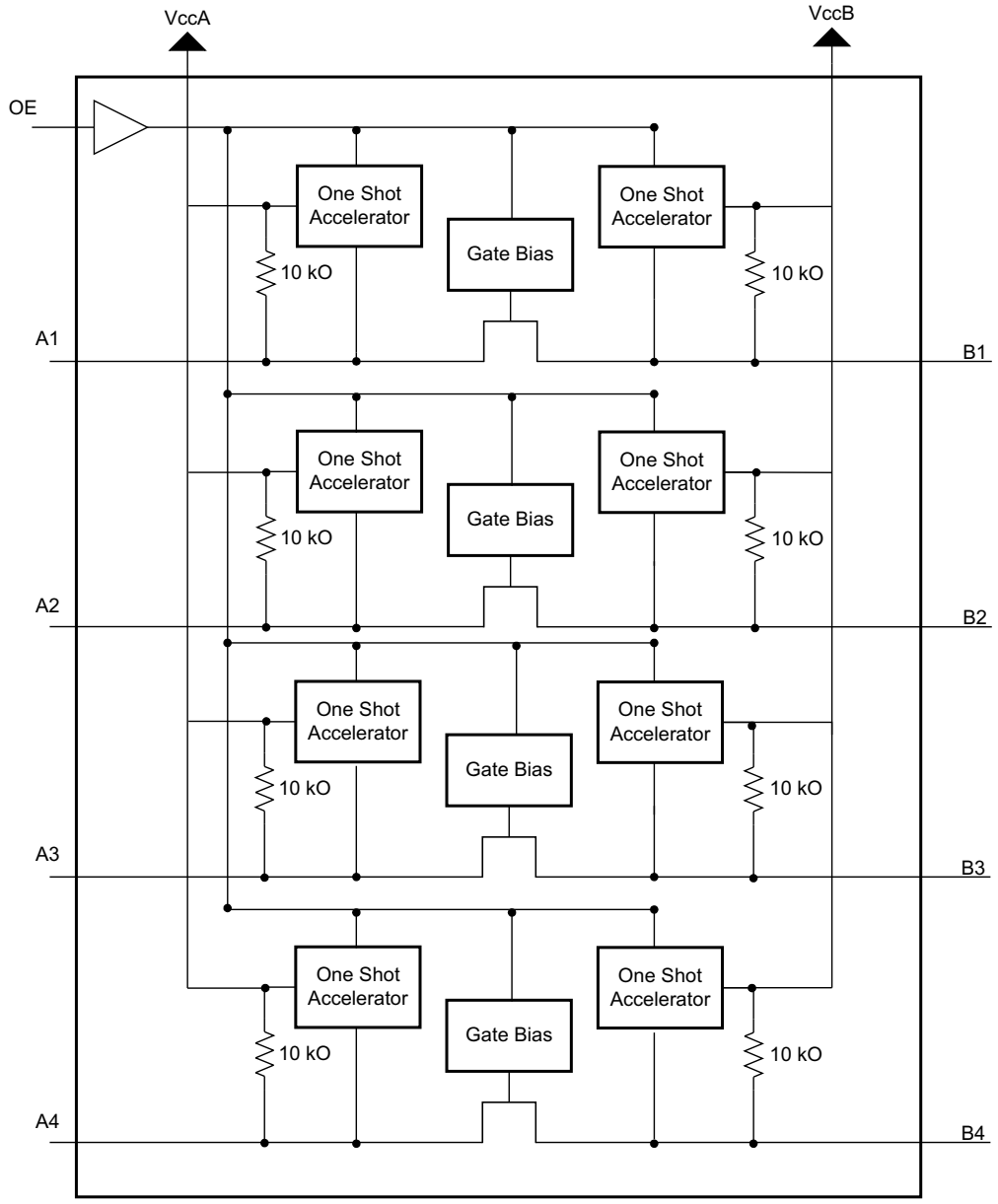

8.3 Feature Description

8.3.1 Architecture

The TXS0104E architecture (see Figure 10) does not require a direction-control signal in order to control the direction of data flow from A to B or from B to A.

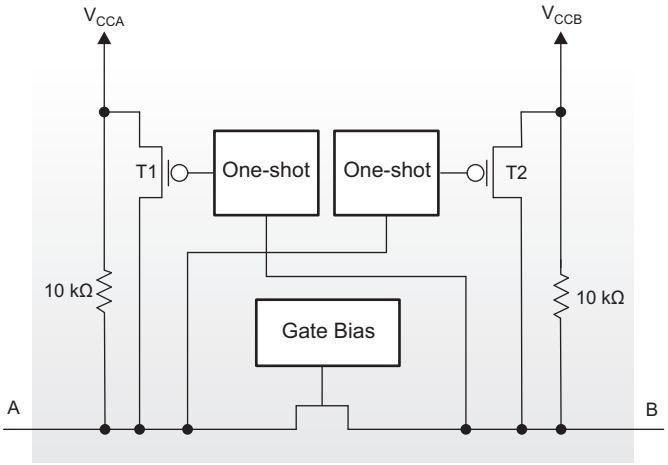

Figure 10. Architecture of a TXS01xx Cell

Each A-port I/O has an internal 10-kΩ pullup resistor to V_{CCA}, and each B-port I/O has an internal 10-kΩ pullup resistor to V_{CCB}. The output one-shots detect rising edges on the A or B ports. During a rising edge, the one-shot turns on the PMOS transistors (T1, T2) for a short duration which speeds up the low-to-high transition.

8.3.2 Input Driver Requirements

The fall time (t_{fA}, t_{fB}) of a signal depends on the output impedance of the external device driving the data I/Os of the TXS0104E device. Similarly, the t_{PHL} and maximum data rates also depend on the output impedance of the external driver. The values for t_{fA}, t_{fB}, t_{PHL}, and maximum data rates in the data sheet assume that the output impedance of the external driver is less than 50 Ω.

8.3.3 Power Up

During operation, ensure that $V_{CCA} \leq V_{CCB}$ at all times. During power-up sequencing, $V_{CCA} \geq V_{CCB}$ does not damage the device, so any power supply can be ramped up first.

8.3.4 Enable and Disable

The TXS0104E device has an OE input that disables the device by setting OE low, which places all I/Os in the high-impedance state. The disable time (t_{dis}) indicates the delay between the time when the OE pin goes low and when the outputs actually enter the high-impedance state. The enable time (t_{en}) indicates the amount of time the user must allow for the one-shot circuitry to become operational after the OE pin is taken high.

8.3.5 Pullup and Pulldown Resistors on I/O Lines

Each A-port I/O has an internal 10-kΩ pullup resistor to V_{CCA}, and each B-port I/O has an internal 10-kΩ pullup resistor to V_{CCB}. If a smaller value of pullup resistor is required, an external resistor must be added from the I/O to V_{CCA} or V_{CCB} (in parallel with the internal 10-kΩ resistors).

8.4 Device Functional Modes

The TXS0104E device has two functional modes, enabled and disabled. To disable the device set the OE input low, which places all I/Os in a high impedance state. Setting the OE input high will enable the device.

Copyright © 2006–2014, Texas Instruments Incorporated

9 Application and Implementation

NOTE

Information in the following applications sections is not part of the TI component specification, and TI does not warrant its accuracy or completeness. TI's customers are responsible for determining suitability of components for their purposes. Customers should validate and test their design implementation to confirm system functionality.

9.1 Application Information

The TXS0104E device can be used in level-translation applications for interfacing devices or systems operating at different interface voltages with one another. The TXS0104E device is ideal for use in applications where an open-drain driver is connected to the data I/Os. The TXS0104E device can also be used in applications where a push-pull driver is connected to the data I/Os, but the TXB0104 device might be a better option for such push-pull applications.

9.2 Typical Application

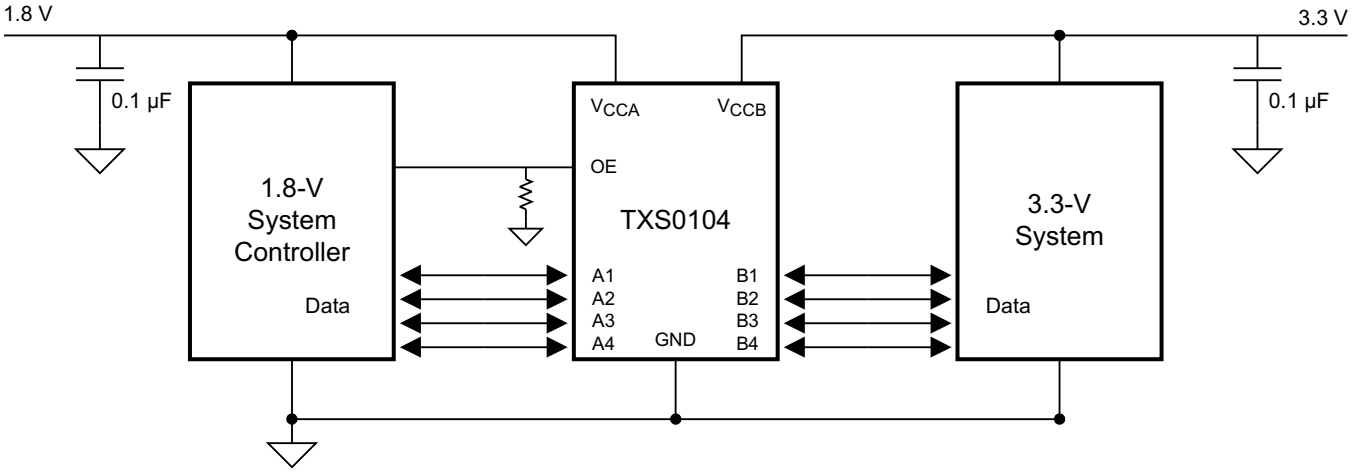

Figure 11. Application Schematic

9.2.1 Design Requirements

For this design example, use the parameters listed in Table 1.

Table 1. Design Parameters

DESIGN PARAMETER	EXAMPLE VALUE
Input voltage range	1.65 to 3.6 V
Output voltage range	2.3 to 5.5 V

9.2.2 Detailed Design Procedure

To begin the design process, determine the following:

- Input voltage range
  - Use the supply voltage of the device that is driving the TXS0104E device to determine the input voltage range. For a valid logic high the value must exceed the V_{IH} of the input port. For a valid logic low the value must be less than the V_{IL} of the input port.
- Output voltage range
  - Use the supply voltage of the device that the TXS0104E device is driving to determine the output voltage range.
  -

Copyright © 2006–2014, Texas Instruments Incorporated

The TXS0104E device has 10-kΩ internal pullup resistors. External pullup resistors can be added to reduce the total RC of a signal trace if necessary.

- An external pull down resistor decreases the output V_{OH} and V_{OL}. Use Equation 1 to calculate the V_{OH} as a result of an external pull down resistor.

$$V_{OH} = V_{CCx} \times R_{PD} / (R_{PD} + 10\ k\Omega) \quad (1)$$

where

V_{CCx} is the supply voltage on either V_{CCA} or V_{CCB}
R_{PD} is the value of the external pull down resistor

9.2.3 Application Curve

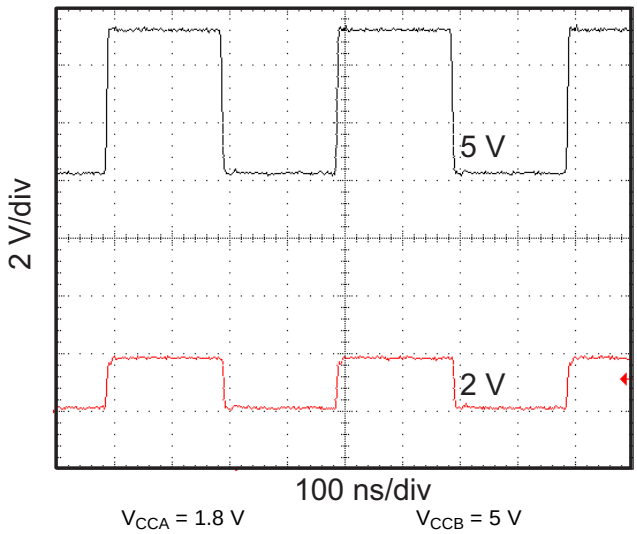

Figure 12. Level-Translation of a 2.5-MHz Signal

Copyright © 2006–2014, Texas Instruments Incorporated

10 Power Supply Recommendations

The TXS0104E device uses two separate configurable power-supply rails, V_{CCA} and V_{CCB}. V_{CCB} accepts any supply voltage from 2.3 V to 5.5 V and V_{CCA} accepts any supply voltage from 1.65 V to 3.6 V as long as Vs is less than or equal to V_{CCB}. The A port and B port are designed to track V_{CCA} and V_{CCB} respectively allowing for low-voltage bidirectional translation between any of the 1.8-V, 2.5-V, 3.3-V, and 5-V voltage nodes.

The TXS0104E device does not require power sequencing between V_{CCA} and V_{CCB} during power-up so the power-supply rails can be ramped in any order. A V_{CCA} value greater than or equal to V_{CCB} ($V_{CCA} \geq V_{CCB}$) does not damage the device, but during operation, V_{CCA} must be less than or equal to V_{CCB} ($V_{CCA} \leq V_{CCB}$) at all times.

The output-enable (OE) input circuit is designed so that it is supplied by V_{CCA} and when the (OE) input is low, all outputs are placed in the high-impedance state. To ensure the high-impedance state of the outputs during power up or power down, the OE input pin must be tied to GND through a pulldown resistor and must not be enabled until V_{CCA} and V_{CCB} are fully ramped and stable. The minimum value of the pulldown resistor to ground is determined by the current-sourcing capability of the driver.

11 Layout

11.1 Layout Guidelines

To ensure reliability of the device, following common printed-circuit board layout guidelines is recommended.

- Bypass capacitors should be used on power supplies.
- Short trace lengths should be used to avoid excessive loading.
- PCB signal trace-lengths must be kept short enough so that the round-trip delay of any reflection is less than the one shot duration, approximately 30 ns, ensuring that any reflection encounters low impedance at the source driver.
- Placing pads on the signal paths for loading capacitors or pullup resistors to help adjust rise and fall times of signals depending on the system requirements

11.2 Layout Example

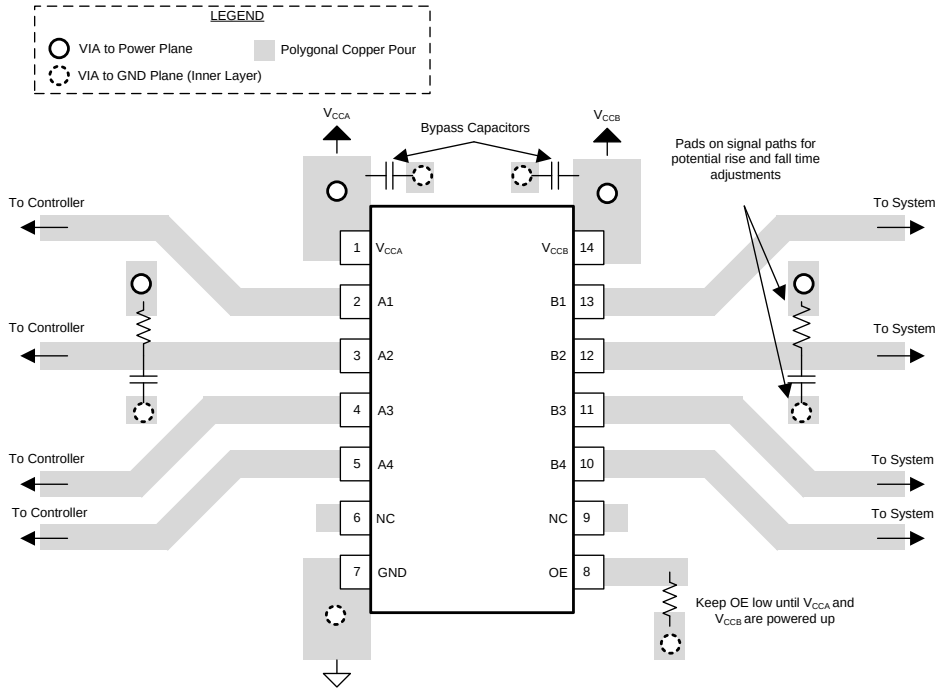

Figure 13. TXS0104E Layout Example

12 Device and Documentation Support

12.1 Trademarks

NanoFree is a trademark of Texas Instruments.
All other trademarks are the property of their respective owners.

12.2 Electrostatic Discharge Caution



These devices have limited built-in ESD protection. The leads should be shorted together or the device placed in conductive foam during storage or handling to prevent electrostatic damage to the MOS gates.

12.3 Glossary

SLYZ022 — *TI Glossary*.

This glossary lists and explains terms, acronyms, and definitions.

13 Mechanical, Packaging, and Orderable Information

The following pages include mechanical, packaging, and orderable information. This information is the most current data available for the designated devices. This data is subject to change without notice and revision of this document. For browser-based versions of this data sheet, refer to the left-hand navigation.

Copyright © 2006–2014, Texas Instruments Incorporated

PACKAGING INFORMATION

Orderable Device	Status (1)	Package Type	Package Drawing	Pins	Package Qty	Eco Plan (2)	Lead/Ball Finish (6)	MSL Peak Temp (3)	Op Temp (°C)	Device Marking (4/5)	Samples
TXS0104ED	ACTIVE	SOIC	D	14	50	Green (RoHS & no Sb/Br)	CU NIPDAU	Level-1-260C-UNLIM	-40 to 85	TXS0104E	Samples
TXS0104EDG4	ACTIVE	SOIC	D	14	50	Green (RoHS & no Sb/Br)	CU NIPDAU	Level-1-260C-UNLIM	-40 to 85	TXS0104E	Samples
TXS0104EDR	ACTIVE	SOIC	D	14	2500	Green (RoHS & no Sb/Br)	CU NIPDAU	Level-1-260C-UNLIM	-40 to 85	TXS0104E	Samples
TXS0104EDRG4	ACTIVE	SOIC	D	14	2500	Green (RoHS & no Sb/Br)	CU NIPDAU	Level-1-260C-UNLIM	-40 to 85	TXS0104E	Samples
TXS0104EPWR	ACTIVE	TSSOP	PW	14	2000	Green (RoHS & no Sb/Br)	CU NIPDAU	Level-1-260C-UNLIM	-40 to 85	YF04E	Samples
TXS0104EPWRG4	ACTIVE	TSSOP	PW	14	2000	Green (RoHS & no Sb/Br)	CU NIPDAU	Level-1-260C-UNLIM	-40 to 85	YF04E	Samples
TXS0104ERGYR	ACTIVE	VQFN	RGY	14	3000	Green (RoHS & no Sb/Br)	CU NIPDAU	Level-2-260C-1 YEAR	-40 to 85	YF04E	Samples
TXS0104ERGYRG4	ACTIVE	VQFN	RGY	14	3000	Green (RoHS & no Sb/Br)	CU NIPDAU	Level-2-260C-1 YEAR	-40 to 85	YF04E	Samples
TXS0104EYZTR	ACTIVE	DSBGA	YZT	12	3000	Green (RoHS & no Sb/Br)	SNAGCU	Level-1-260C-UNLIM	-40 to 85	(2HN ~ 2N ~ 2N7)	Samples
TXS0104EZXUR	ACTIVE	BGA MICROSTAR JUNIOR	ZXU	12	2500	Green (RoHS & no Sb/Br)	SNAGCU	Level-1-260C-UNLIM	-40 to 85	YF04E	Samples

(1) The marketing status values are defined as follows:
ACTIVE: Product device recommended for new designs.
LIFEBUY: TI has announced that the device will be discontinued, and a lifetime-buy period is in effect.
NRND: Not recommended for new designs. Device is in production to support existing customers, but TI does not recommend using this part in a new design.
PREVIEW: Device has been announced but is not in production. Samples may or may not be available.
OBSOLETE: TI has discontinued the production of the device.

(2) Eco Plan - The planned eco-friendly classification: Pb-Free (RoHS), Pb-Free (RoHS Exempt), or Green (RoHS & no Sb/Br) - please check http://www.ti.com/productcontent for the latest availability information and additional product content details.
TBD: The Pb-Free/Green conversion plan has not been defined.
Pb-Free (RoHS): TI's terms "Lead-Free" or "Pb-Free" mean semiconductor products that are compatible with the current RoHS requirements for all 6 substances, including the requirement that lead not exceed 0.1% by weight in homogeneous materials. Where designed to be soldered at high temperatures, TI Pb-Free products are suitable for use in specified lead-free processes.
Pb-Free (RoHS Exempt): This component has a RoHS exemption for either 1) lead-based flip-chip solder bumps used between the die and package, or 2) lead-based die adhesive used between the die and leadframe. The component is otherwise considered Pb-Free (RoHS compatible) as defined above.

Green (RoHS & no Sb/Br): TI defines "Green" to mean Pb-Free (RoHS compatible), and free of Bromine (Br) and Antimony (Sb) based flame retardants (Br or Sb do not exceed 0.1% by weight in homogeneous material)

(3) MSL, Peak Temp. - The Moisture Sensitivity Level rating according to the JEDEC industry standard classifications, and peak solder temperature.

(4) There may be additional marking, which relates to the logo, the lot trace code information, or the environmental category on the device.

(5) Multiple Device Markings will be inside parentheses. Only one Device Marking contained in parentheses and separated by a "~" will appear on a device. If a line is indented then it is a continuation of the previous line and the two combined represent the entire Device Marking for that device.

(6) Lead/Ball Finish - Orderable Devices may have multiple material finish options. Finish options are separated by a vertical ruled line. Lead/Ball Finish values may wrap to two lines if the finish value exceeds the maximum column width.

Important Information and Disclaimer: The information provided on this page represents TI's knowledge and belief as of the date that it is provided. TI bases its knowledge and belief on information provided by third parties, and makes no representation or warranty as to the accuracy of such information. Efforts are underway to better integrate information from third parties. TI has taken and continues to take reasonable steps to provide representative and accurate information but may not have conducted destructive testing or chemical analysis on incoming materials and chemicals. TI and TI suppliers consider certain information to be proprietary, and thus CAS numbers and other limited information may not be available for release.

In no event shall TI's liability arising out of such information exceed the total purchase price of the TI part(s) at issue in this document sold by TI to Customer on an annual basis.

OTHER QUALIFIED VERSIONS OF TXS0104E :

- Automotive: TXS0104E-Q1

NOTE: Qualified Version Definitions:

- Automotive - Q100 devices qualified for high-reliability automotive applications targeting zero defects

TAPE AND REEL INFORMATION

REEL DIMENSIONS

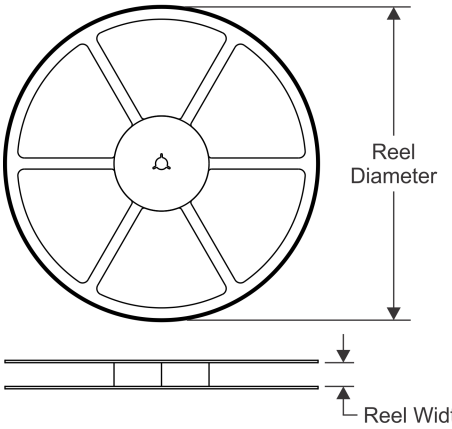

TAPE DIMENSIONS

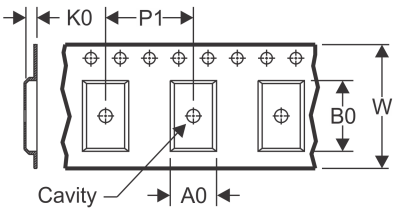

A0	Dimension designed to accommodate the component width
B0	Dimension designed to accommodate the component length
K0	Dimension designed to accommodate the component thickness
W	Overall width of the carrier tape
P1	Pitch between successive cavity centers

QUADRANT ASSIGNMENTS FOR PIN 1 ORIENTATION IN TAPE

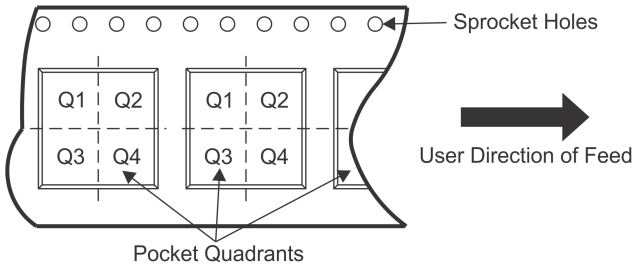

*All dimensions are nominal

Device	Package Type	Package Drawing	Pins	SPQ	Reel Diameter (mm)	Reel Width W1 (mm)	A0 (mm)	B0 (mm)	K0 (mm)	P1 (mm)	W (mm)	Pin1 Quadrant
TXS0104EDR	SOIC	D	14	2500	330.0	16.4	6.5	9.0	2.1	8.0	16.0	Q1
TXS0104EPWR	TSSOP	PW	14	2000	330.0	12.4	6.9	5.6	1.6	8.0	12.0	Q1
TXS0104ERGYR	VQFN	RGY	14	3000	330.0	12.4	3.75	3.75	1.15	8.0	12.0	Q1
TXS0104EYZTR	DSBGA	YZT	12	3000	180.0	8.4	1.49	1.99	0.75	4.0	8.0	Q2
TXS0104EZXUR	BGA MICROSTAR JUNIOR	ZXU	12	2500	330.0	8.4	2.3	2.8	1.0	4.0	8.0	Q2

TAPE AND REEL BOX DIMENSIONS

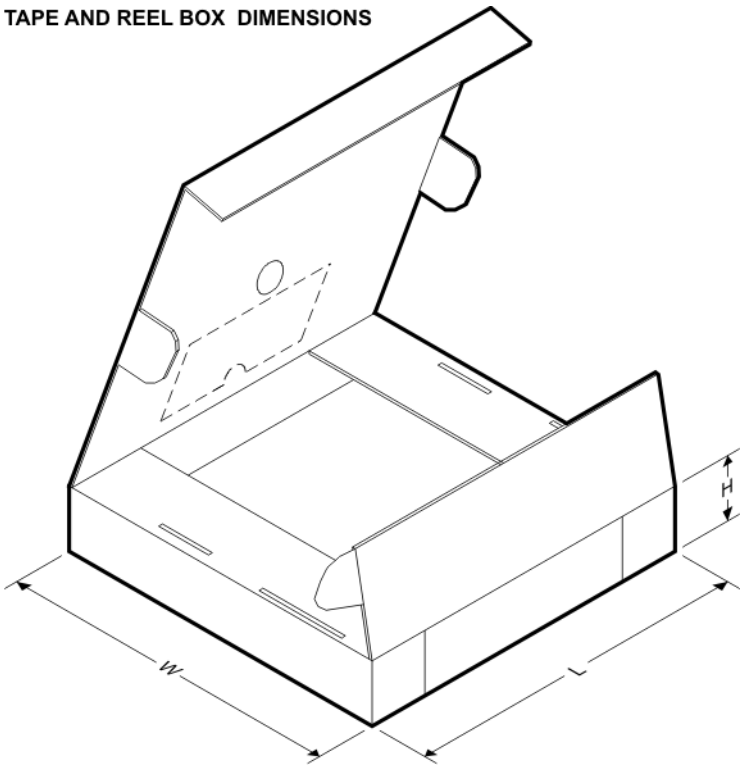

*All dimensions are nominal

Device	Package Type	Package Drawing	Pins	SPQ	Length (mm)	Width (mm)	Height (mm)
TXS0104EDR	SOIC	D	14	2500	367.0	367.0	38.0
TXS0104EPWR	TSSOP	PW	14	2000	367.0	367.0	35.0
TXS0104ERGYR	VQFN	RGY	14	3000	367.0	367.0	35.0
TXS0104EYZTR	DSBGA	YZT	12	3000	182.0	182.0	20.0
TXS0104EZXUR	BGA MICROSTAR JUNIOR	ZXU	12	2500	336.6	336.6	28.6

RGY (S–PVQFN–N14) PLASTIC QUAD FLATPACK NO–LEAD

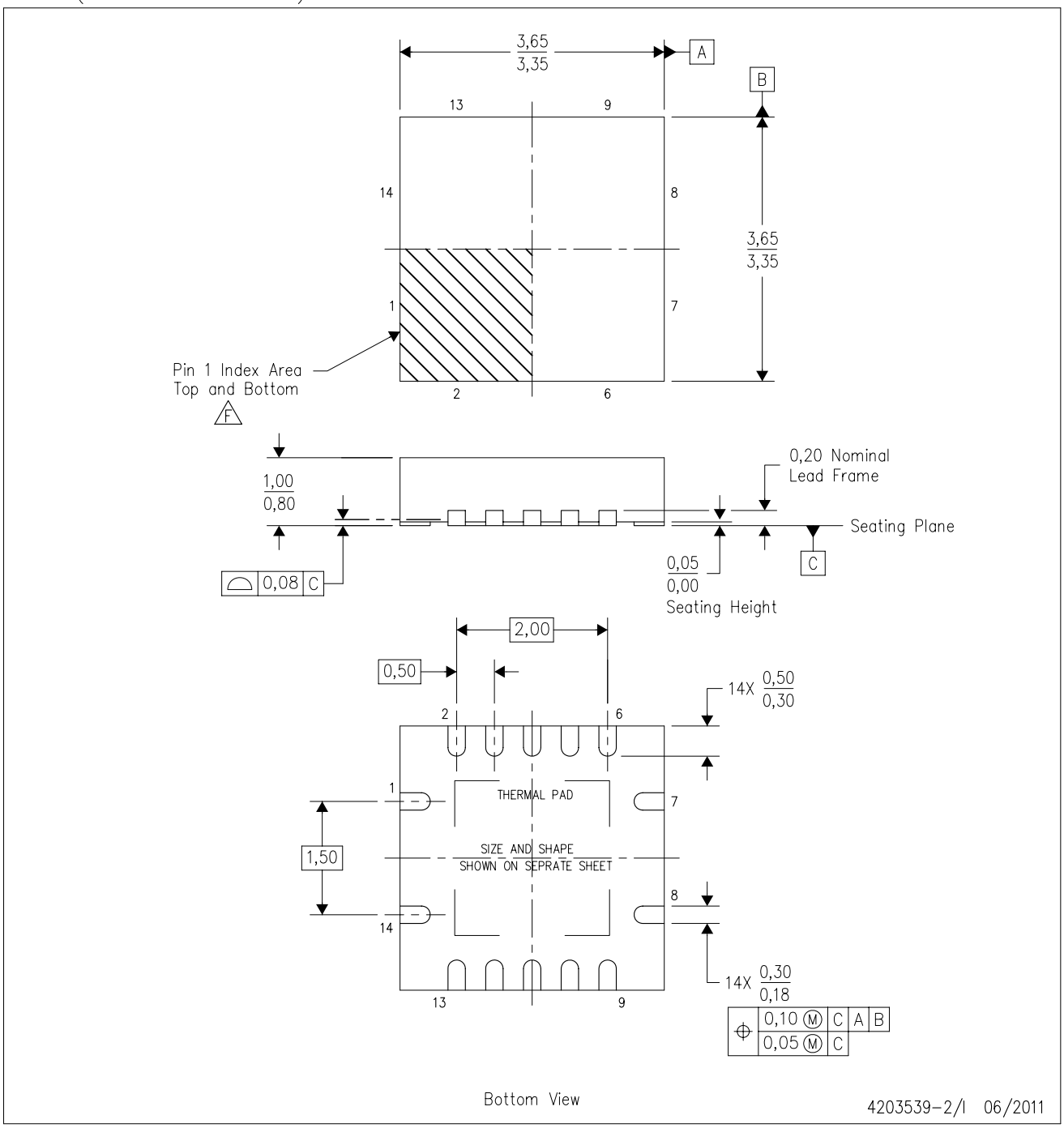

NOTES:
A. All linear dimensions are in millimeters. Dimensioning and tolerancing per ASME Y14.5M–1994.
B. This drawing is subject to change without notice.
C. QFN (Quad Flatpack No–Lead) package configuration.
D. The package thermal pad must be soldered to the board for thermal and mechanical performance.
E. See the additional figure in the Product Data Sheet for details regarding the exposed thermal pad features and dimensions.
F. Pin 1 identifiers are located on both top and bottom of the package and within the zone indicated. The Pin 1 identifiers are either a molded, marked, or metal feature.
G. Package complies to JEDEC MO–241 variation BA.

RGY (S–PVQFN–N14) PLASTIC QUAD FLATPACK NO–LEAD

THERMAL INFORMATION

This package incorporates an exposed thermal pad that is designed to be attached directly to an external heatsink. The thermal pad must be soldered directly to the printed circuit board (PCB). After soldering, the PCB can be used as a heatsink. In addition, through the use of thermal vias, the thermal pad can be attached directly to the appropriate copper plane shown in the electrical schematic for the device, or alternatively, can be attached to a special heatsink structure designed into the PCB. This design optimizes the heat transfer from the integrated circuit (IC).

For information on the Quad Flatpack No–Lead (QFN) package and its advantages, refer to Application Report, QFN/SON PCB Attachment, Texas Instruments Literature No. SLUA271. This document is available at www.ti.com.

The exposed thermal pad dimensions for this package are shown in the following illustration.

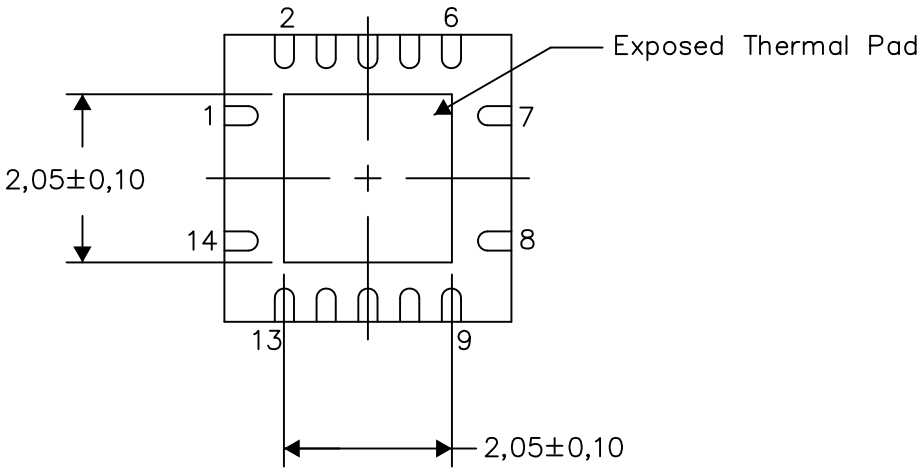

Bottom View

Exposed Thermal Pad Dimensions

4206353–2/P 03/14

NOTE: All linear dimensions are in millimeters

RGY (S–PVQFN–N14) PLASTIC QUAD FLATPACK NO–LEAD

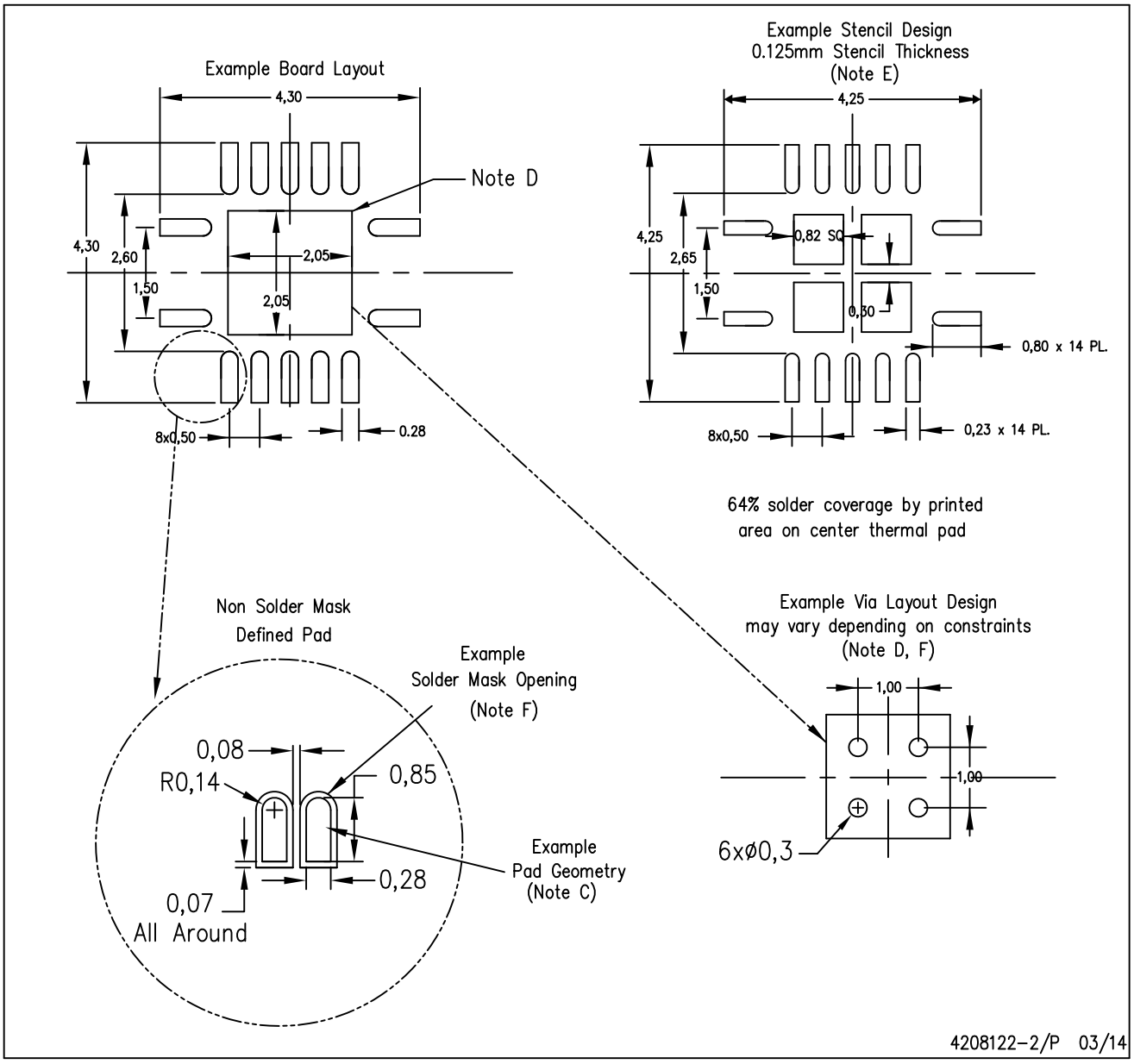

NOTES:
A. All linear dimensions are in millimeters.
B. This drawing is subject to change without notice.
C. Publication IPC–7351 is recommended for alternate designs.
D. This package is designed to be soldered to a thermal pad on the board. Refer to Application Note, Quad Flat–Pack QFN/SON PCB Attachment, Texas Instruments Literature No. SLUA271, and also the Product Data Sheets for specific thermal information, via requirements, and recommended board layout. These documents are available at www.ti.com <http: //www.ti.com>.
E. Laser cutting apertures with trapezoidal walls and also rounding corners will offer better paste release. Customers should contact their board assembly site for stencil design recommendations. Refer to IPC 7525 for stencil design considerations.
F. Customers should contact their board fabrication site for minimum solder mask web tolerances between signal pads.

D (R–PDSO–G14) PLASTIC SMALL OUTLINE

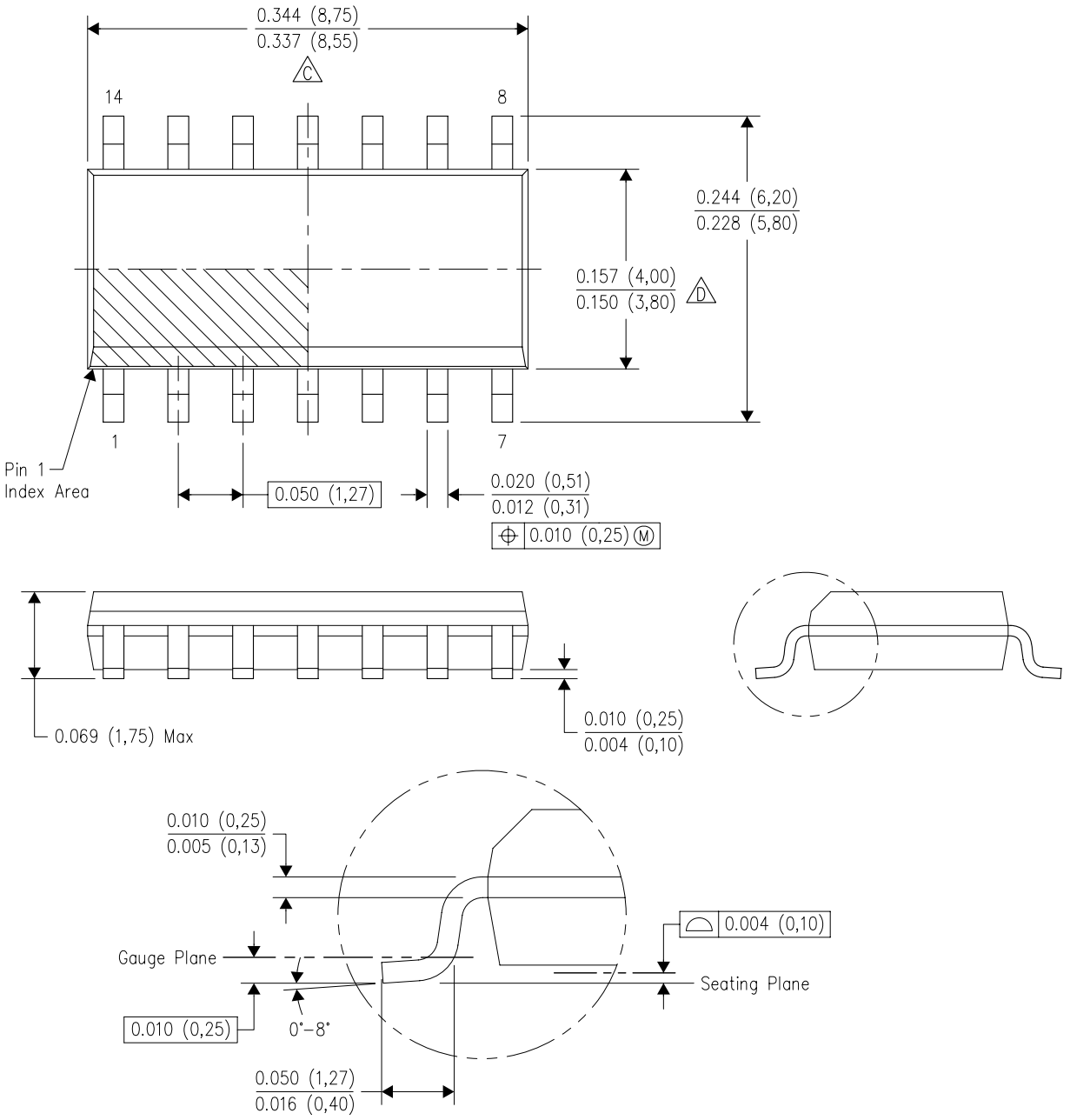

4040047–5/M 06/11

NOTES:
A. All linear dimensions are in inches (millimeters).
B. This drawing is subject to change without notice.
C. Body length does not include mold flash, protrusions, or gate burrs. Mold flash, protrusions, or gate burrs shall not exceed 0.006 (0,15) each side.
D. Body width does not include interlead flash. Interlead flash shall not exceed 0.017 (0,43) each side.
E. Reference JEDEC MS–012 variation AB.

D (R–PDSO–G14) PLASTIC SMALL OUTLINE

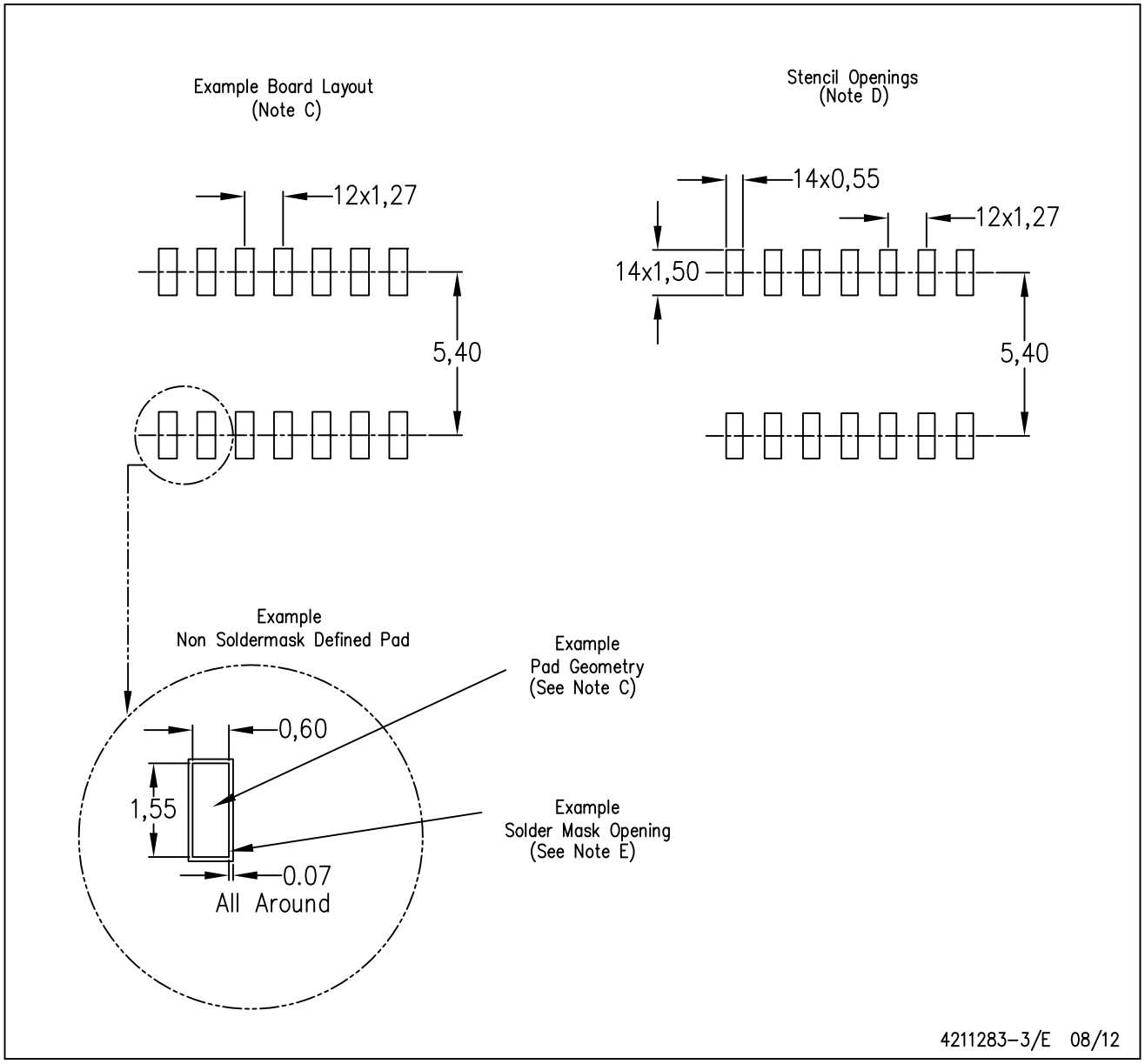

NOTES:
A. All linear dimensions are in millimeters.
B. This drawing is subject to change without notice.
C. Publication IPC–7351 is recommended for alternate designs.
D. Laser cutting apertures with trapezoidal walls and also rounding corners will offer better paste release. Customers should contact their board assembly site for stencil design recommendations. Refer to IPC–7525 for other stencil recommendations.
E. Customers should contact their board fabrication site for solder mask tolerances between and around signal pads.

PW (R–PDSO–G14) PLASTIC SMALL OUTLINE

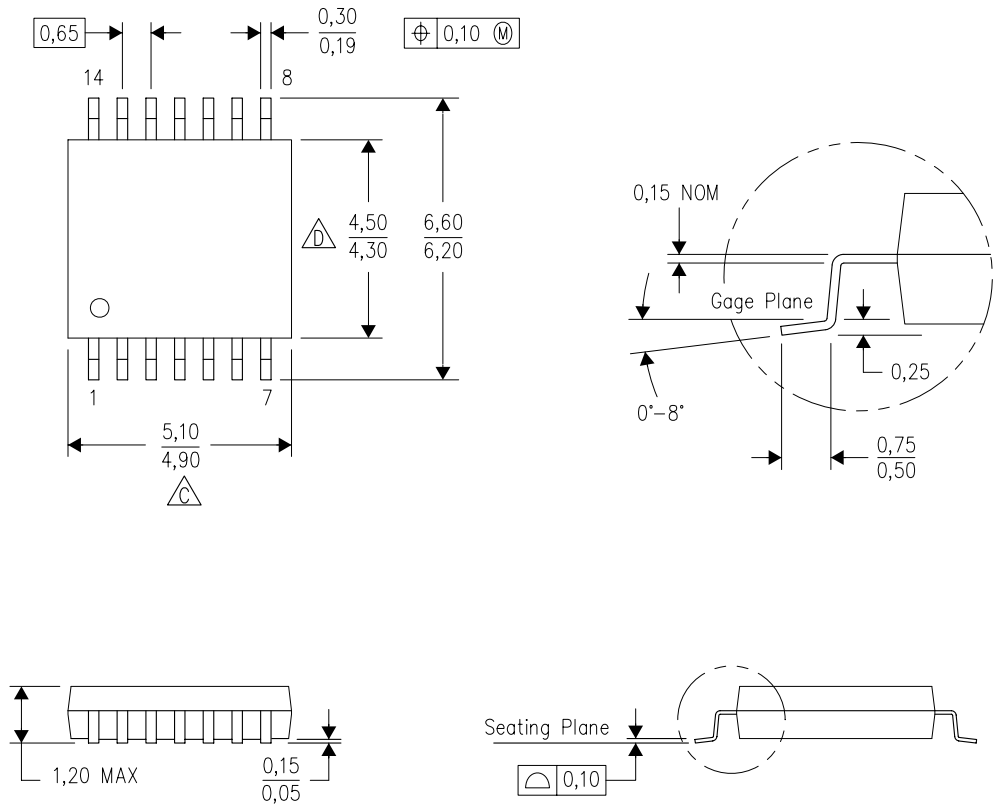

4040064–3/G 02/11

NOTES:
A. All linear dimensions are in millimeters. Dimensioning and tolerancing per ASME Y14.5M–1994.
B. This drawing is subject to change without notice.
C. Body length does not include mold flash, protrusions, or gate burrs. Mold flash, protrusions, or gate burrs shall not exceed 0,15 each side.
D. Body width does not include interlead flash. Interlead flash shall not exceed 0,25 each side.
E. Falls within JEDEC MO–153

ZXU (S–PBGA–N12) PLASTIC BALL GRID ARRAY

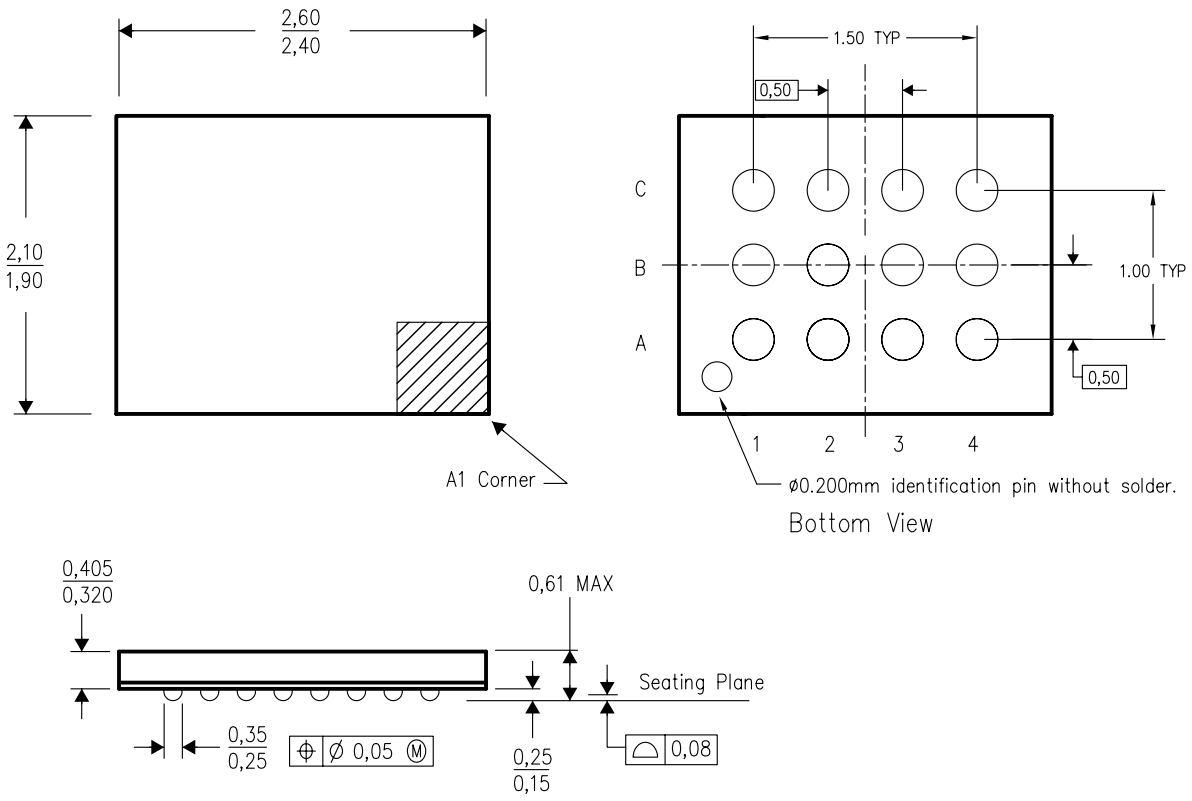

4207009/B 06/05

NOTES:
A. All linear dimensions are in millimeters.
B. This drawing is subject to change without notice.
C. This package is a lead–free solder ball design.

YZT (R–XBGA–N12) (CUSTOM) DIE–SIZE BALL GRID ARRAY

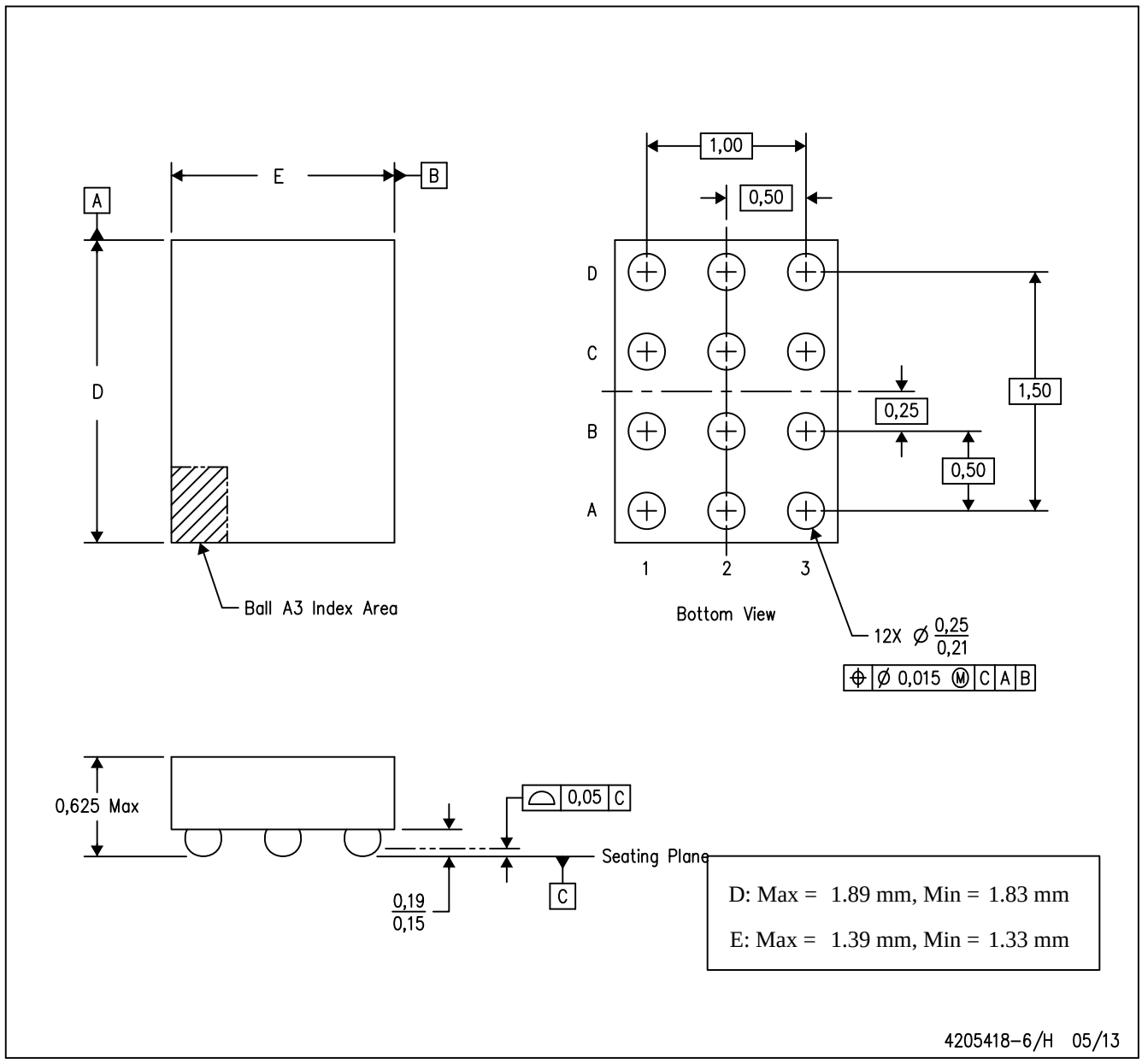

NOTES:
A. All linear dimensions are in millimeters. Dimensioning and tolerancing per ASME Y14.5M–1994.
B. This drawing is subject to change without notice.
C. NanoFree™ package configuration.

NanoFree is a trademark of Texas Instruments.

IMPORTANT NOTICE FOR TI DESIGN INFORMATION AND RESOURCES

Texas Instruments Incorporated ('TI") technical, application or other design advice, services or information, including, but not limited to, reference designs and materials relating to evaluation modules, (collectively, "TI Resources") are intended to assist designers who are developing applications that incorporate TI products; by downloading, accessing or using any particular TI Resource in any way, you (individually or, if you are acting on behalf of a company, your company) agree to use it solely for this purpose and subject to the terms of this Notice.

TI's provision of TI Resources does not expand or otherwise alter TI's applicable published warranties or warranty disclaimers for TI products, and no additional obligations or liabilities arise from TI providing such TI Resources. TI reserves the right to make corrections, enhancements, improvements and other changes to its TI Resources.

You understand and agree that you remain responsible for using your independent analysis, evaluation and judgment in designing your applications and that you have full and exclusive responsibility to assure the safety of your applications and compliance of your applications (and of all TI products used in or for your applications) with all applicable regulations, laws and other applicable requirements. You represent that, with respect to your applications, you have all the necessary expertise to create and implement safeguards that (1) anticipate dangerous consequences of failures, (2) monitor failures and their consequences, and (3) lessen the likelihood of failures that might cause harm and take appropriate actions. You agree that prior to using or distributing any applications that include TI products, you will thoroughly test such applications and the functionality of such TI products as used in such applications. TI has not conducted any testing other than that specifically described in the published documentation for a particular TI Resource.

You are authorized to use, copy and modify any individual TI Resource only in connection with the development of applications that include the TI product(s) identified in such TI Resource. NO OTHER LICENSE, EXPRESS OR IMPLIED, BY ESTOPPEL OR OTHERWISE TO ANY OTHER TI INTELLECTUAL PROPERTY RIGHT, AND NO LICENSE TO ANY TECHNOLOGY OR INTELLECTUAL PROPERTY RIGHT OF TI OR ANY THIRD PARTY IS GRANTED HEREIN, including but not limited to any patent right, copyright, mask work right, or other intellectual property right relating to any combination, machine, or process in which TI products or services are used. Information regarding or referencing third-party products or services does not constitute a license to use such products or services, or a warranty or endorsement thereof. Use of TI Resources may require a license from a third party under the patents or other intellectual property of the third party, or a license from TI under the patents or other intellectual property of TI.

TI RESOURCES ARE PROVIDED "AS IS" AND WITH ALL FAULTS. TI DISCLAIMS ALL OTHER WARRANTIES OR REPRESENTATIONS, EXPRESS OR IMPLIED, REGARDING TI RESOURCES OR USE THEREOF, INCLUDING BUT NOT LIMITED TO ACCURACY OR COMPLETENESS, TITLE, ANY EPIDEMIC FAILURE WARRANTY AND ANY IMPLIED WARRANTIES OF MERCHANTABILITY, FITNESS FOR A PARTICULAR PURPOSE, AND NON-INFRINGEMENT OF ANY THIRD PARTY INTELLECTUAL PROPERTY RIGHTS.

TI SHALL NOT BE LIABLE FOR AND SHALL NOT DEFEND OR INDEMNIFY YOU AGAINST ANY CLAIM, INCLUDING BUT NOT LIMITED TO ANY INFRINGEMENT CLAIM THAT RELATES TO OR IS BASED ON ANY COMBINATION OF PRODUCTS EVEN IF DESCRIBED IN TI RESOURCES OR OTHERWISE. IN NO EVENT SHALL TI BE LIABLE FOR ANY ACTUAL, DIRECT, SPECIAL, COLLATERAL, INDIRECT, PUNITIVE, INCIDENTAL, CONSEQUENTIAL OR EXEMPLARY DAMAGES IN CONNECTION WITH OR ARISING OUT OF TI RESOURCES OR USE THEREOF, AND REGARDLESS OF WHETHER TI HAS BEEN ADVISED OF THE POSSIBILITY OF SUCH DAMAGES.

You agree to fully indemnify TI and its representatives against any damages, costs, losses, and/or liabilities arising out of your non-compliance with the terms and provisions of this Notice.

This Notice applies to TI Resources. Additional terms apply to the use and purchase of certain types of materials, TI products and services. These include; without limitation, TI's standard terms for semiconductor products http://www.ti.com/sc/docs/stdterms.htm), evaluation modules, and samples (http://www.ti.com/sc/docs/sampterms.htm).

Mailing Address: Texas Instruments, Post Office Box 655303, Dallas, Texas 75265
Copyright © 2017, Texas Instruments Incorporated

Looking for pricing, stock, or lifecycle information?

Click below to explore more details on WIN SOURCE:

- View TXS0104ERGYR on WIN SOURCE
- Texas Instruments Information

Optimize Your Supply Chain with WIN SOURCE Solutions

- Global Sourcing Solution
- Obsolete Management
- Cost Control Management
- Shortage Management
- Alternative Solution
- Excess Inventory Management