THE DATASHEET OF

RT9742GGJ5F

www.win-source.net 0086-755-83957316

70mΩ/55mΩ, 3A/2.5A/2A/1.5A/1A/0.5A High-Side Power Switches with Flag

General Description

The RT9742 is a cost-effective, low-voltage, single N-MOSFET high-side Power Switch IC for USB application. Low switch-on resistance and low supply current are realized in this IC.

The RT9742 integrates an over-current protection circuit, a short fold back circuit, a thermal shutdown circuit and an under-voltage lockout circuit for overall protection. Besides, a flag output is available to indicate fault conditions to the local USB controller. Furthermore, the chip also integrates an embedded delay function to prevent miss-operation from happening due to inrush-current. The RT9742 is an ideal solution for USB power supply and can support flexible applications since it is available in TSOT-23-5, TSOT-23-5 (FC) and SOT-23-3 package.

Features

- **70mΩ/55mΩ (typ.) N-MOSFET Switch**
- **Operating Range : 2.7V to 6V**
- **Reverse Blocking Current**
- **Under Voltage Lockout**
- **Deglitched Fault Report ($\overline{FLG}$)**
- **Thermal Protection with Fold-back**
- **Over Current Protection**
- **Short Circuit Protection**
- **UL Approved–E219878**
- **Nemko Approved-NO109777**

Applications

- USB Peripherals
- Notebook PCs

Pin Configuration

(TOP VIEW)

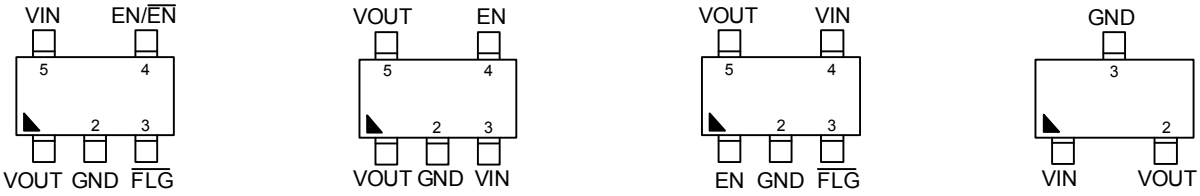

TSOT-23-5 / TSOT-23-5 (FC)

TSOT-23-5 For RT9742M/V only

TSOT-23-5 For RT9742U only

SOT-23-3

Simplified Application Circuit

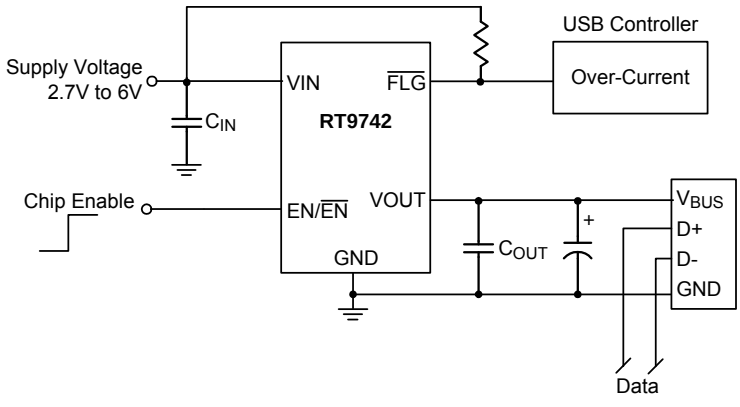

Copyright ©2020 Richtek Technology Corporation. All rights reserved. RICHTEK is a registered trademark of Richtek Technology Corporation.

Ordering and Marking Information

Version	Product Code	Current	Discharge Function	EN Function			Package		
				Active High	Active Low	Internal Pull High	TSOT-23-5 (FC)	TSOT-23-5	SOT-23-3
RT9742AGJ5F	07=	3A	Yes	V			V		
RT9742BGJ5F	06=	3A	Yes		V		V		
RT9742ANGJ5F	0F=	3A	No	V			V		
RT9742BNGJ5F	0E=	3A	No		V		V		
RT9742CGJ5F	05=	2A	Yes	V			V		
RT9742DGJ5F	04=	2A	Yes		V		V		
RT9742CNGJ5F	0D=	2A	No	V			V		
RT9742DNGJ5F	0C=	2A	No		V		V		
RT9742CGJ5	0K=	2A	Yes	V				V	
RT9742DGJ5	0J=	2A	Yes		V			V	
RT9742CNGJ5	11=	2A	No	V				V	
RT9742DNGJ5	10=	2A	No		V			V	
RT9742JNGV	6A=	2A	No			V			V
RT9742EGJ5F	03=	1.5A	Yes	V			V		
RT9742FGJ5F	02=	1.5A	Yes		V		V		
RT9742ENGJ5F	0B=	1.5A	No	V			V		
RT9742FNGJ5F	0A=	1.5A	No		V		V		
RT9742EGJ5	0H=	1.5A	Yes	V				V	
RT9742FGJ5	0G=	1.5A	Yes		V			V	
RT9742ENGJ5	0Z=	1.5A	No	V				V	
RT9742FNGJ5	0Y=	1.5A	No		V			V	
RT9742KNGV	69=	1.5A	No			V			V
RT9742GGJ5F	01=	1A	Yes	V			V		
RT9742HGJ5F	00=	1A	Yes		V		V		
RT9742GNGJ5F	09=	1A	No	V			V		
RT9742HNGJ5F	08=	1A	No		V		V		
RT9742GGJ5	0F=	1A	Yes	V				V	
RT9742HGJ5	0E=	1A	Yes		V			V	
RT9742GNGJ5	0X=	1A	No	V				V	
RT9742HNGJ5	0W=	1A	No		V			V	
RT9742LNGV	68=	1A	No			V			V
RT9742MGJ5	14=	1.5A	Yes	V				V	
RT9742MNGJ5	15=	1.5A	No	V				V	
RT9742VGJ5	9S=	2A	Yes	V				V	
RT9742NGJ5F	43=	2.5A	Yes	V			V		
RT9742PGJ5F	DD=	2.5A	Yes		V		V		
RT9742NNGJ5F	42=	2.5A	No	V			V		
RT9742PNGJ5F	CC=	2.5A	No		V		V		
RT9742NGJ5	9H	2.5A	Yes	V				V	
RT9742QGJ5	47=	0.5A	Yes	V				V	
RT9742RGJ5	45=	0.5A	Yes		V			V	
RT9742QNGJ5	46=	0.5A	No	V				V	
RT9742RNGJ5	44=	0.5A	No		V			V	
RT9742SNGV	6V=	0.5A	No			V			V
RT9742UNGJ5	9F=	1.5A	No	V				V	

Copyright ©2020 Richtek Technology Corporation. All rights reserved. RICHTEK is a registered trademark of Richtek Technology Corporation.

Note :

Richtek products are :

- RoHS compliant and compatible with the current requirements of IPC/JEDEC J-STD-020.
- Suitable for use in SnPb or Pb-free soldering processes.

Functional Pin Description

Pin Name	Pin Function
VOUT	Output voltage.
GND	Ground.
$\overline{FLG}$	Fault FLAG output.
EN/$\overline{EN}$	Chip enable (Active High/Low).
VIN	Power input voltage.

Functional Block Diagram

TSOT-23-5 / TSOT-23-5 (FC) Package

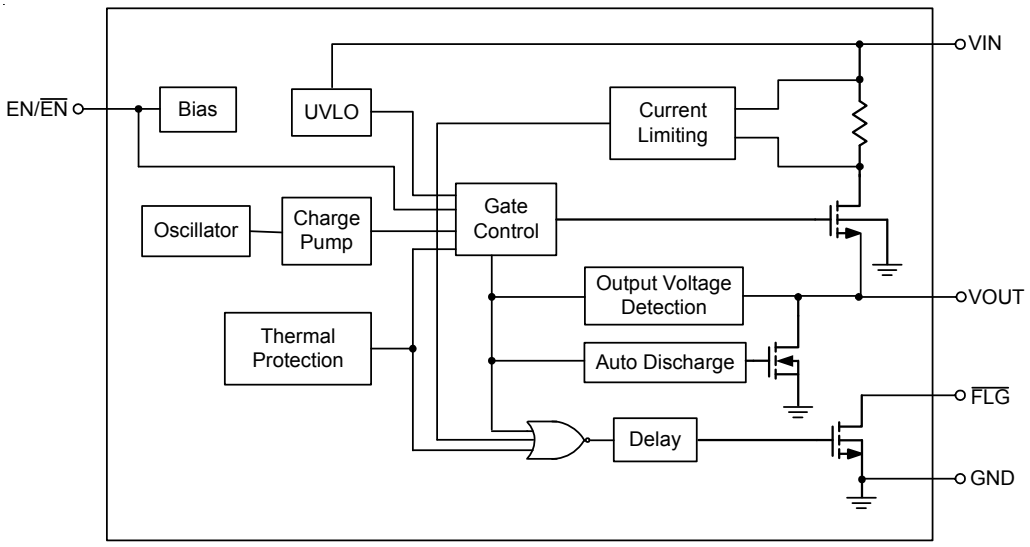

SOT-23-3 Package

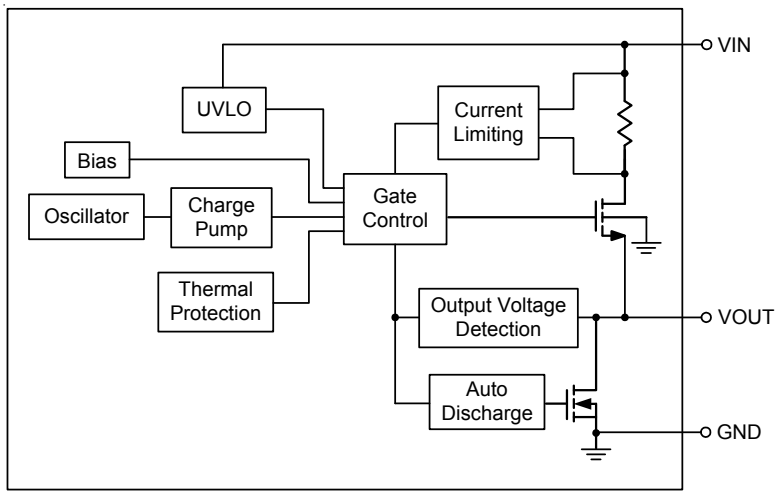

Copyright ©2020 Richtek Technology Corporation. All rights reserved. RICHTEK is a registered trademark of Richtek Technology Corporation.

TSOT-23-5 Package (For RT9742M/V Only)

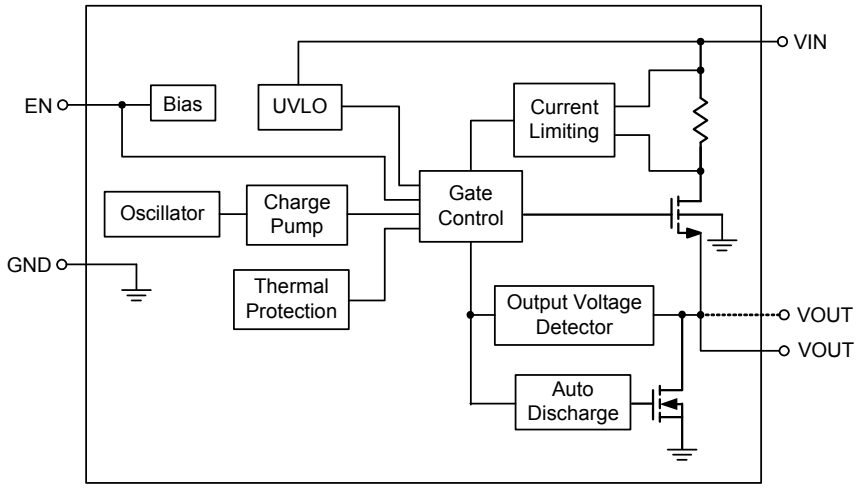

Operation

Charge Pump and Drivers

An internal charge pump supplies power to the driver circuit and provides the necessary voltage to pull the gate of the MOSFET above the source. The driver controls the gate voltage of the power switch.

Current Limit

The RT9742 continuously monitors the output current for over-current protection to protect the system power, the power switch, and the load from damage during output short circuit. When an overload or short circuit occurs, the current-sense circuitry sends a control signal to the driver. The driver reduces the gate voltage and drives the power MOSFET into its saturation region, which switches the output into a constant-current mode and holds the current constant until the thermal shutdown occurs or the fault is removed.

Under-Voltage Lockout

A voltage-sense circuit monitors the input voltage. When the input voltage is above 2.4V, UVLO turns on the MOSFET switch.

Thermal Shutdown

The RT9742 continuously monitors the operating temperature of the power switch for over-temperature protection. The RT9742 turns off the power switch to prevent the device from damage if the junction temperature rises to approximately 140°C due to over-current or short-circuit conditions. The pass element turns on again after the junction temperature cools to 120°C.

$\overline{\text{FLAG}}$

The RT9742 pulls low the open drain output $\overline{\text{FLAG}}$ after over current or over temperature condition occurring over approximately 10ms.

Copyright ©2020 Richtek Technology Corporation. All rights reserved. RICHTEK is a registered trademark of Richtek Technology Corporation.

Absolute Maximum Ratings (Note 1)

- Supply Input Voltage, VIN ---------- 7V
- EN Voltage ---------- –0.3V to 7V
- FLAG Voltage ---------- 7V
- Power Dissipation, P_D @ T_A = 25°C
  - TSOT-23-5 ---------- 0.49W
  - TSOT-23-5 (FC) ---------- 0.79W
  - SOT-23-3 ---------- 0.41W
- Package Thermal Resistance (Note 2)
  - TSOT-23-5, θ_{JA} ---------- 203°C/W
  - TSOT-23-5 (FC), θ_{JA} ---------- 126.5°C/W
  - SOT-23-3, θ_{JA} ---------- 243.3°C/W
- Junction Temperature ---------- 150°C
- Lead Temperature (Soldering, 10 sec.) ---------- 260°C
- Storage Temperature Range ---------- –65°C to 150°C
- ESD Susceptibility (Note 3)
  - HBM (Human Body Model) ---------- 2kV

Recommended Operating Conditions (Note 4)

- Supply Input Voltage, VIN ---------- 2.7V to 6V
- EN Voltage ---------- 0V to 6V
- Junction Temperature Range ---------- –40°C to 125°C
- Ambient Temperature Range ---------- –40°C to 85°C

Electrical Characteristics

(V_{IN} = 5V, C_{IN} = 10µF, C_{OUT} = 0.1µF, T_A = 25°C, unless otherwise specified)

Parameter		Symbol	Test Conditions	Min	Typ	Max	Unit
Input Quiescent Current		I_Q	Switch on, V_{OUT} = open	--	30	40	µA
Input Shutdown Current		I_{SHDN}	V_{IN} = 5V, no load on OUT, device OFF, V_{EN} = 0V or $V_{\overline{EN}}$ = 5V	--	0.1	1	µA
Switch On Resistance	RT9742XXJ5F	$R_{DS(ON)}$		--	55	--	mΩ
	RT9742XXJ5/V			--	70	--	mΩ
Over Current Trip Threshold (Note 5)	RT9742Q/R/S	I_{TRIP}	V_{IN} = 5V, 100A/s	0.65	0.89	1	A
	RT9742G/H/L			1.05	1.4	1.5	A
	RT9742E/F/K/M/U			1.55	2.1	2.25	A
	RT9742C/D/J/V			2.05	2.8	3	A
	RT9742N/P			2.55	3.5	3.75	A
	RT9742A/B			3.05	4.2	4.5	A

Copyright ©2020 Richtek Technology Corporation. All rights reserved. RICHTEK is a registered trademark of Richtek Technology Corporation.

Parameter		Symbol	Test Conditions	Min	Typ	Max	Unit
Current Limit	RT9742Q/R/S	I_{LIM}	V_{OUT} = 1V	0.6	0.7	0.8	A
	RT9742G/H/L			1	1.1	1.2	
	RT9742E/F/K/M/U			1.5	1.65	1.8	
	RT9742C/D/V			2	2.2	2.4	
	RT9742N/P			2.5	2.75	3	
	RT9742A/B			3	3.3	3.6	
	RT9742J			1.8	2.15	2.5	
EN/$\overline{EN}$ Threshold	Logic_High Voltage	V_{IH}	V_{IN} = 2.7V to 6V	1.5	--	--	V
	Logic_Low Voltage	V_{IL}	V_{IN} = 2.7V to 6V	--	--	0.75	
EN/$\overline{EN}$ Input Current		$I_{EN/\overline{EN}}$	V_{EN} = 0V, $V_{\overline{EN}}$ = 5V	–0.5	--	0.5	μA
Output Leakage Current		$I_{LEAKAGE}$	V_{EN} = 0V, R_{LOAD} = 0Ω	--	0.5	1	μA
Reverse Leakage Current		I_{REV}	V_{OUT} = 5V, V_{IN} = 0V	--	--	1	μA
Reverse Voltage Trip Point		V_{REV}	V_{OUT} – V_{IN}	--	200	--	mV
Output Turn-On Rise Time		t_{ON_RISE}	10% to 90% of V_{OUT} rising	--	1.5	--	ms
Turn-On Time		t_{ON}	From enable to 90% of V_{OUT}	--	2.1	--	ms
$\overline{FLG}$ Output Resistance		$R_{\overline{FLG}}$	I_{SINK} = 1mA	--	10	--	Ω
$\overline{FLG}$ Off Current		$I_{\overline{FLG}_OFF}$	$V_{\overline{FLG}}$ = 5V	--	0.01	1	μA
$\overline{FLG}$ Delay Time		t_D	From fault condition to $\overline{FLG}$ assertion	--	10	--	ms
Shutdown Auto-Discharge Resistance		$R_{Discharge}$	V_{EN} = 0V, V_{EN} = 5V	--	100	--	Ω
Under-Voltage Lockout		V_{UVLO}	V_{IN} rising	--	--	2.4	V
Under-Voltage Hysteresis		ΔV_{UVLO}	V_{IN} decreasing	--	0.1	--	V
Thermal Shutdown Protection		T_{SD}	(Note 6)	--	140	--	°C
Thermal Shutdown Hysteresis		ΔT_{SD}	(Note 6)	--	20	--	°C

Note 1. Stresses beyond those listed under "Absolute Maximum Ratings" may cause permanent damage to the device. These are stress ratings only, and functional operation of the device at these or any other conditions beyond those indicated in the operational sections of the specifications is not implied. Exposure to absolute maximum rating conditions may affect device reliability.

Note 2. θ_{JA} is measured at T_A = 25°C on a high effective thermal conductivity four-layer test board per JEDEC 51-7.

Note 3. Devices are ESD sensitive. Handling precaution is recommended.

Note 4. The device is not guaranteed to function outside its operating conditions.

The thermal shutdown protection will react at high Ambient Temperature or low V_{IN} due to $R_{DS(ON)}$ variation. Please refer to Application Information and Typical Operating Characteristics.

Note 5. For a specific sample, Current Trip Threshold (I_{TRIP}) is always higher than Current Limit Threshold (I_{LIM}).

Note 6. Guarantee by design.

Copyright ©2020 Richtek Technology Corporation. All rights reserved. RICHTEK is a registered trademark of Richtek Technology Corporation.

Typical Application Circuit

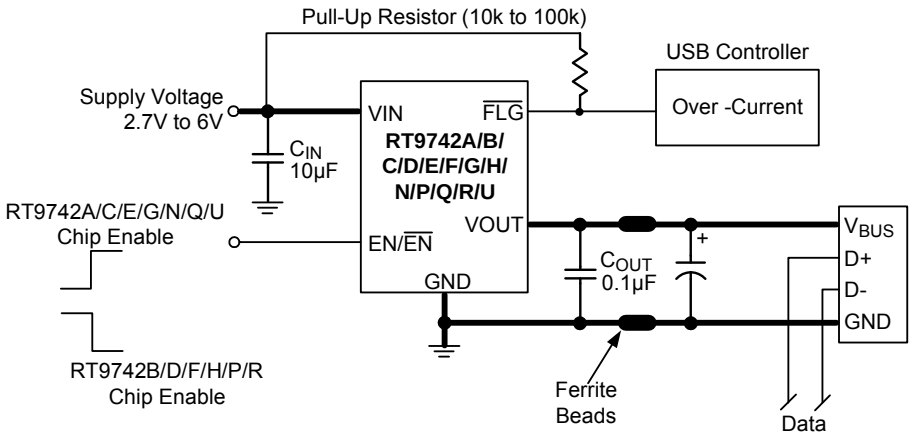

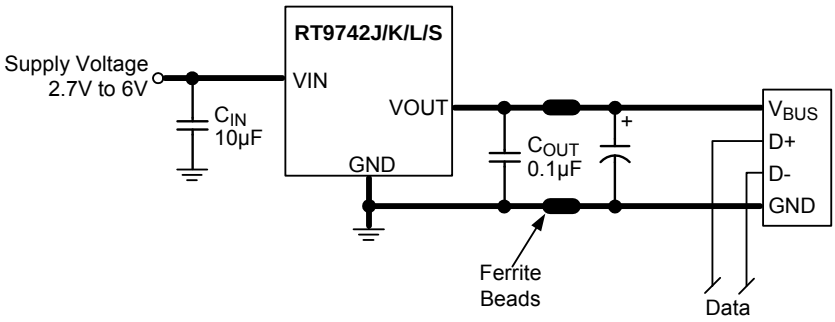

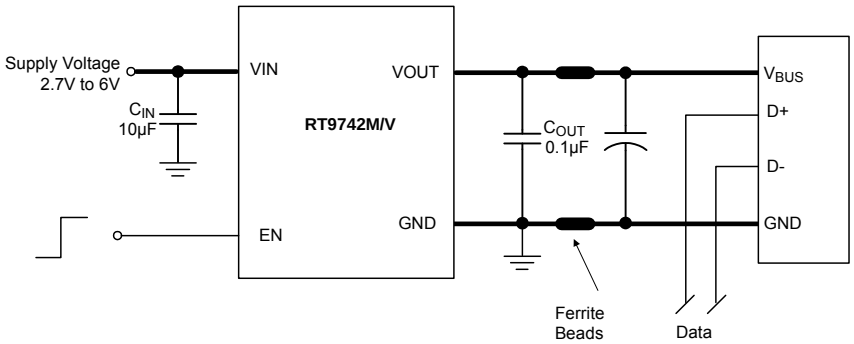

Copyright ©2020 Richtek Technology Corporation. All rights reserved. RICHTEK is a registered trademark of Richtek Technology Corporation.

Typical Operating Characteristics

On Resistance vs. Input Voltage

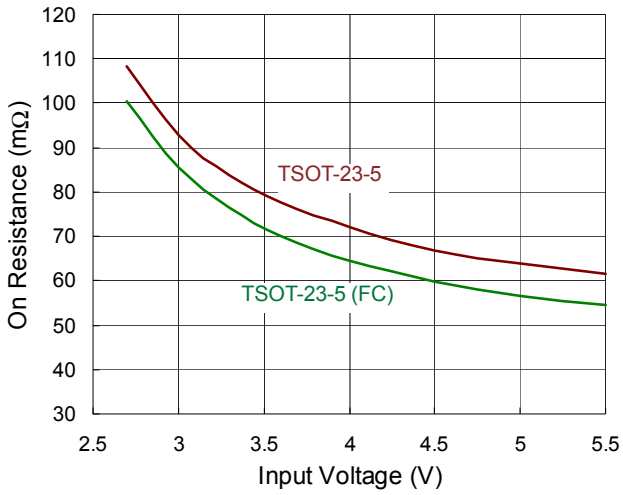

On Resistance vs. Temperature

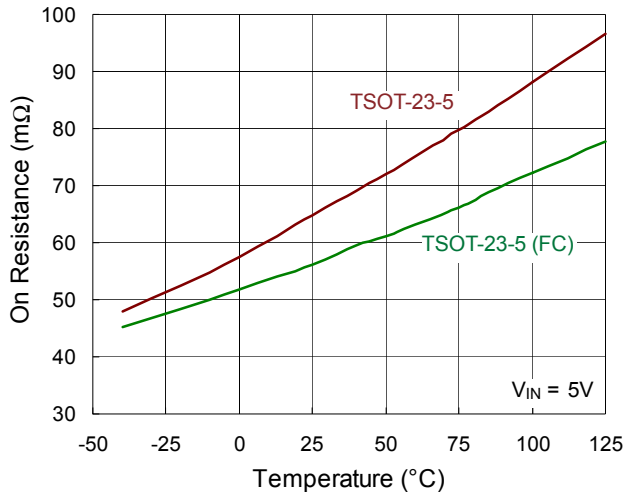

Quiescent Current vs. Input Voltage

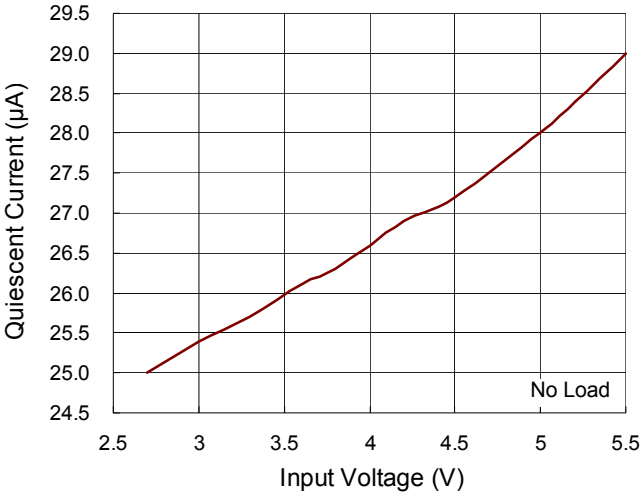

Quiescent Current vs. Temperature

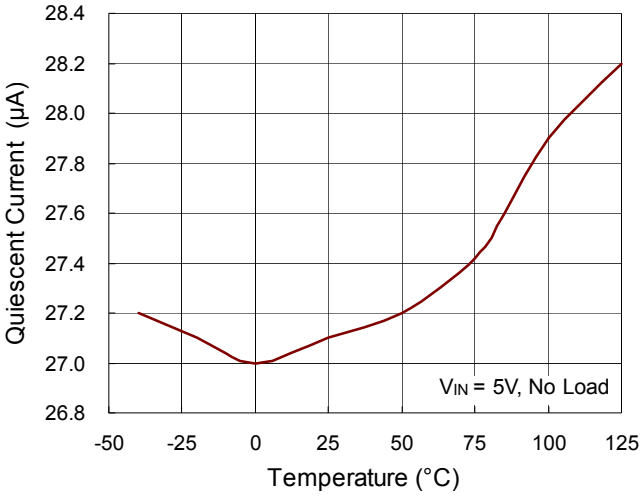

Shutdown Current vs. Input Voltage

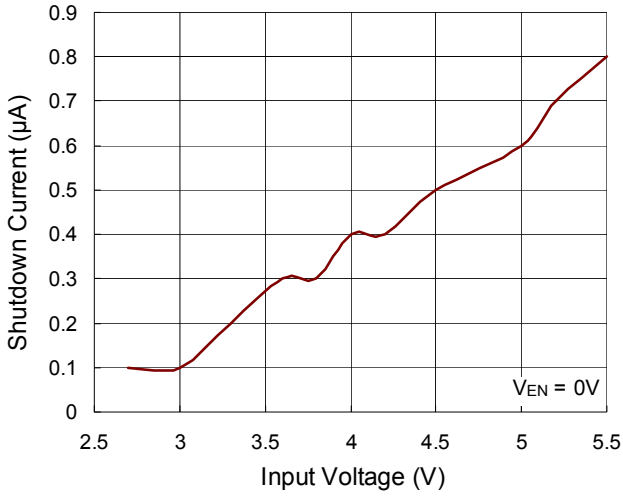

Shutdown Current vs. Temperature

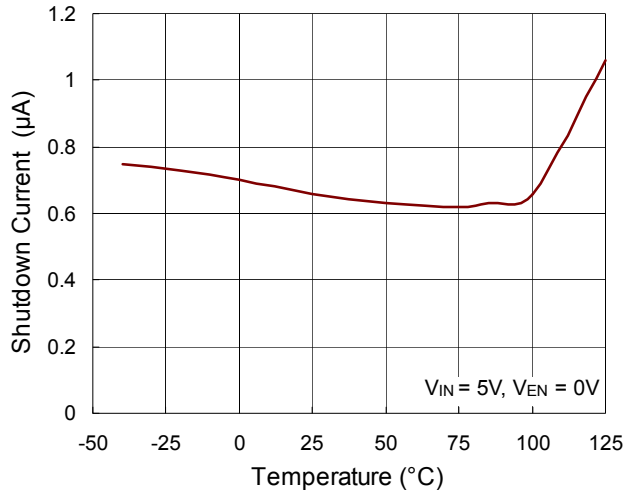

Copyright ©2020 Richtek Technology Corporation. All rights reserved. RICHTEK is a registered trademark of Richtek Technology Corporation.

Output Voltage vs. Output Current

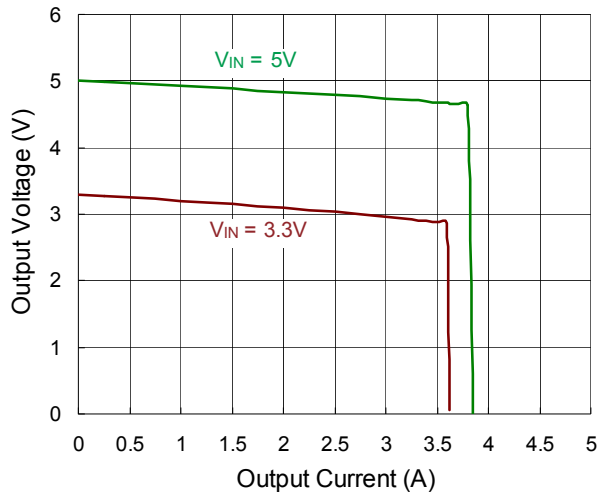

UVLO Threshold vs. Temperature

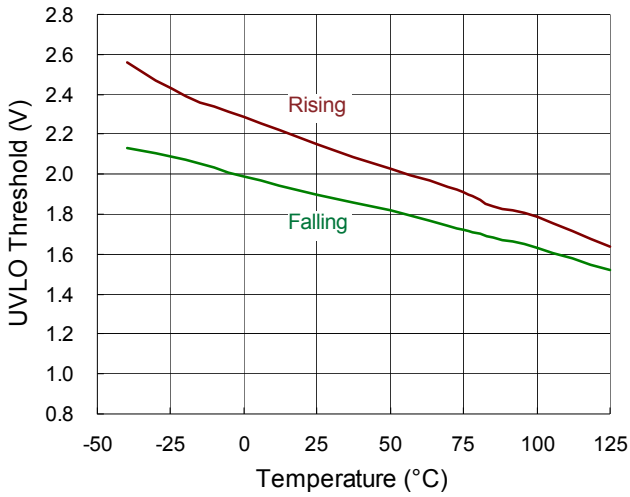

Current Limit Threshold vs. Input Voltage

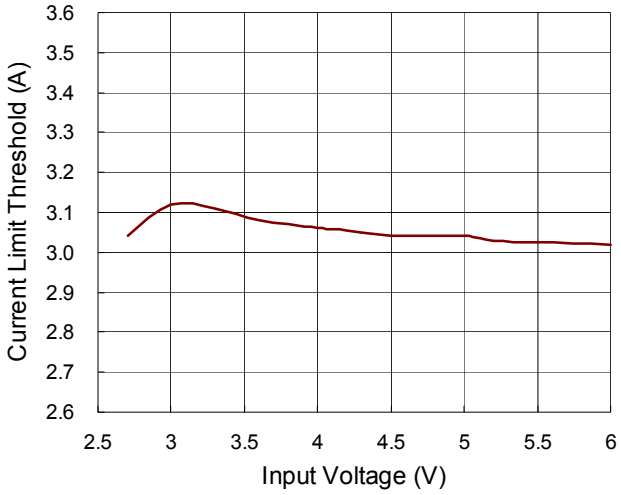

Current Limit Threshold vs. Temperature

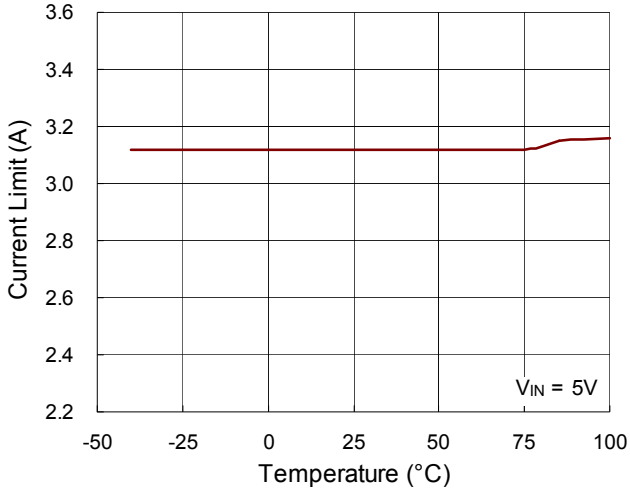

Over Current Trip Threshold vs. Temperature

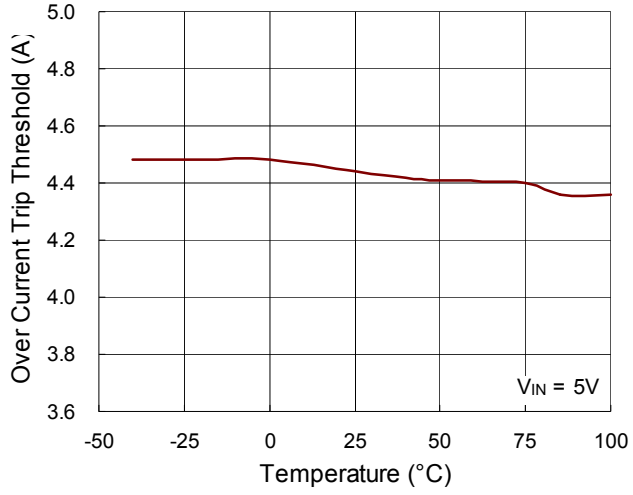

FLAG Delay Time vs. Input Voltage

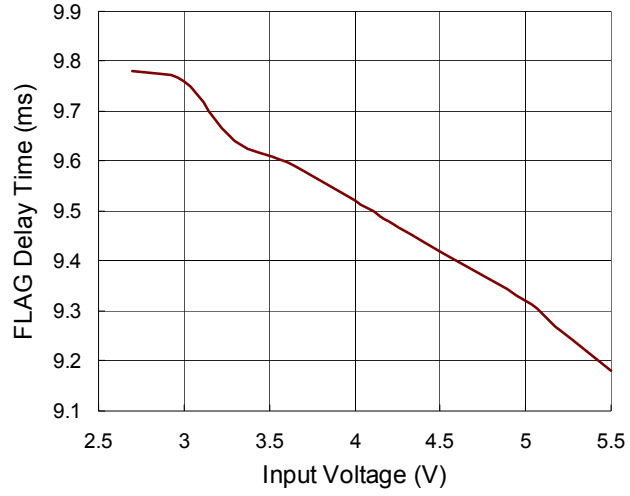

Copyright ©2020 Richtek Technology Corporation. All rights reserved. RICHTEK is a registered trademark of Richtek Technology Corporation.

Power On from VIN

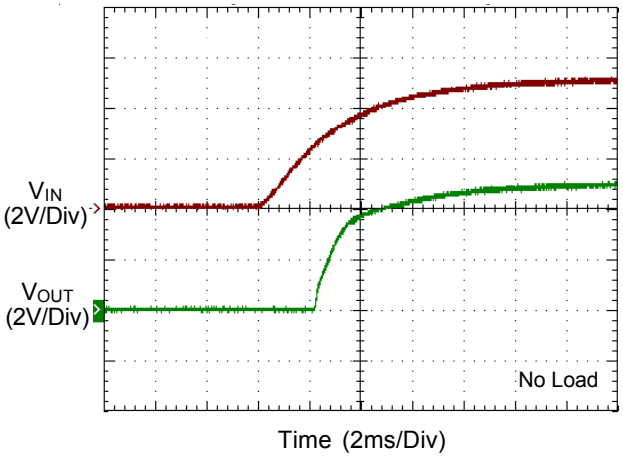

Power Off from VIN

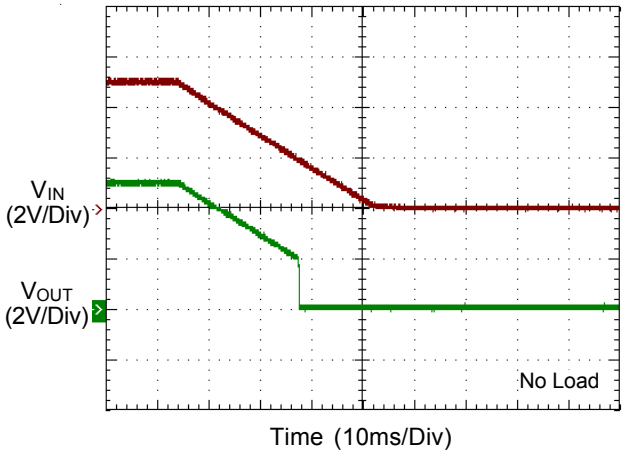

Power On from EN

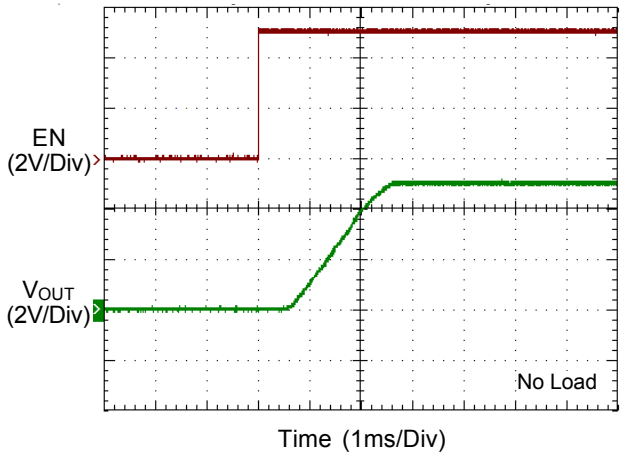

$\overline{\text{FLG}}$ Response

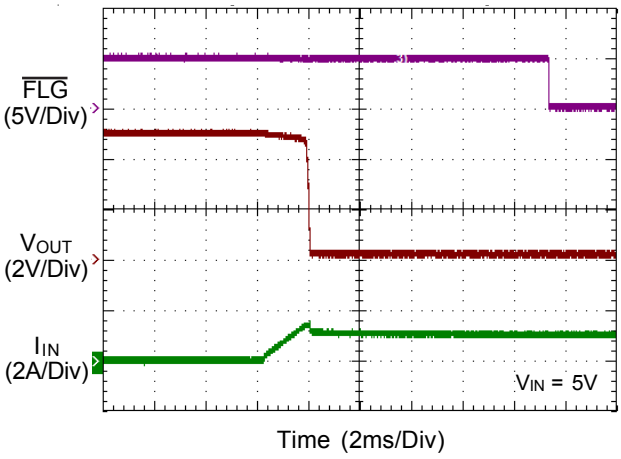

Copyright ©2020 Richtek Technology Corporation. All rights reserved. RICHTEK is a registered trademark of Richtek Technology Corporation.

Application Information

The RT9742 is a single N-MOSFET high-side power switch with enable input, optimized for self-powered and bus-powered Universal Serial Bus (USB) applications. The RT9742 is equipped with a charge pump circuitry to drive the internal N-MOSFET switch; the switch's low $R_{DS(ON)}$, 70mΩ/55mΩ, meets USB voltage drop requirements; and a flag output is available to indicate fault conditions to the local USB controller.

Input and Output

V_{IN} (input) is the power source connection to the internal circuitry and the drain of the MOSFET. V_{OUT} (output) is the source of the MOSFET. In a typical application, current flows through the switch from VIN to V_{OUT} toward the load. If V_{OUT} is greater than VIN, current will flow from V_{OUT} to VIN since the MOSFET is bidirectional when on.

Unlike a normal MOSFET, there is no parasitic body diode between drain and source of the MOSFET, the RT9742 prevents reverse current flow if V_{OUT} is externally forced to a higher voltage than VIN when the chip is disabled.

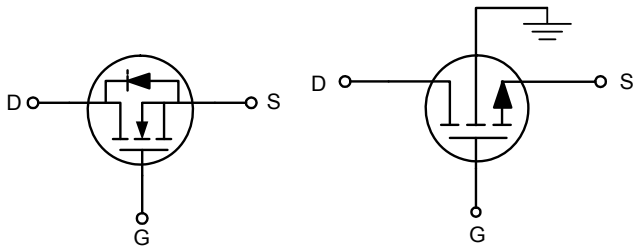

Normal MOSFET RT9742

Chip Enable Input

The switch will be disabled when the EN/$\overline{EN}$ pin is in a logic low/high condition. During this condition, the internal circuitry and MOSFET will be turned off. Floating the EN/$\overline{EN}$ may cause unpredictable operation. EN should not be allowed to go negative with respect to GND. The EN/$\overline{EN}$ pin may be directly tied to V_{IN} (GND) to keep the part on.

Reverse Voltage Protection

When the output voltage exceeds than input voltage by reverse voltage trip point (V_{REV}), the reverse voltage protection circuitry will turn off MOSFET to protect the input power supply. The MOSFET will turn on again when output voltage return to the same level with input voltage.

Soft-Start for Hot Plug-In Applications

In order to eliminate the upstream voltage droop caused by the large inrush current during hot-plug events, the "soft-start" feature effectively isolates the power source from extremely large capacitive loads, satisfying the USB voltage droop requirements.

Fault Flag

The RT9742 series provides a $\overline{FLG}$ signal pin which is an N-Channel open drain MOSFET output. This open drain output goes low when current limit or the die temperature exceeds 140°C approximately. The $\overline{FLG}$ output is capable of sinking a 10mA load to typically 200mV above ground. The $\overline{FLG}$ pin requires a pull-up resistor, this resistor should be large in value to reduce energy drain. A 100kΩ pull-up resistor works well for most applications. In the case of an over-current condition, $\overline{FLG}$ will be asserted only after the flag response delay time, t_D, has elapsed. This ensures that $\overline{FLG}$ is asserted only upon valid over-current conditions and that erroneous error reporting is eliminated.

For example, false over-current conditions may occur during hot-plug events when extremely large capacitive loads are connected and causes a high transient inrush current that exceeds the current limit threshold. The $\overline{FLG}$ response delay time t_D is typically 10ms.

Under-Voltage Lockout

Under-voltage lockout (UVLO) prevents the MOSFET switch from turning on until input the voltage exceeds 2.4V. If input voltage drops below than UVLO threshold, UVLO turns off the MOSFET switch. Under-voltage detection functions only when the switch is enabled.

Copyright ©2020 Richtek Technology Corporation. All rights reserved. RICHTEK is a registered trademark of Richtek Technology Corporation.

Current Limiting and Short-Circuit Protection

The current limit circuitry prevents damage to the MOSFET switch and the hub downstream port but can deliver load current up to the current limit threshold. When a heavy load or short circuit is applied to an enabled switch, a large transient current may flow until the current limit circuitry responds. Once this current limit threshold is exceeded, the device enters constant current mode until the thermal shutdown occurs or the fault is removed.

Thermal Shutdown

Thermal protection limits the power dissipation in the RT9742. When the operation junction temperature exceeds 140°C, the OTP circuit starts the thermal shutdown function and turns the pass element off. The pass element turn on again after the junction temperature cools to 120°C.

Power Dissipation

The junction temperature of the RT9742 series depend on several factors such as the load, PCB layout, ambient temperature and package type. The output pin of the RT9742 can deliver the current of up to the current limit threshold over the full operating junction temperature range. However, the maximum output current must be derated at higher ambient temperature to ensure the junction temperature does not exceed 125°C. With all possible conditions, the junction temperature must be within the range specified under operating conditions. Power dissipation can be calculated based on the output current and the $R_{DS(ON)}$ of the switch as below.

$$P_D = R_{DS(ON)} \times I_{OUT}^2$$

Although the devices are rated for 3A, 2.5A, 2A, 1.5A, 1A and 0.5A , of output current, but the application may limit the amount of output current based on the total power dissipation and the ambient temperature. The final operating junction temperature for any set of conditions can be estimated by the following thermal equation :

$$P_{D(MAX)} = (T_{J(MAX)} - T_A) / \theta_{JA}$$

Where $T_{J(MAX)}$ is the maximum junction temperature of the die (125°C) and T_A is the maximum ambient temperature.

The junction to ambient thermal resistance (θ_{JA}) for TSOT-23-5 package at recommended minimum footprint is 203°C/W (θ_{JA} is layout dependent).

Universal Serial Bus (USB) & Power Distribution

The goal of USB is to enable device from different vendors to interoperate in an open architecture. USB features include ease of use for the end user, a wide range of workloads and applications, robustness, synergy with the PC industry, and low-cost implementation. Benefits include self-identifying peripherals, dynamically attachable and reconfigurable peripherals, multiple connections (support for concurrent operation of many devices), support for as many as 127 physical devices, and compatibility with PC Plug-and-Play architecture.

The Universal Serial Bus connects USB devices with a USB host: each USB system has one USB host. USB devices are classified either as hubs, which provide additional attachment points to the USB, or as functions, which provide capabilities to the system (for example, a digital joystick). Hub devices are then classified as either Bus-Power Hubs or Self-Powered Hubs.

A Bus-Powered Hub draws all of the power to any internal functions and downstream ports from the USB connector power pins. The hub may draw up to 500mA from the upstream device. External ports in a Bus-Powered Hub can supply up to 100mA per port, with a maximum of four external ports.

Self-Powered Hub power for the internal functions and downstream ports does not come from the USB, although the USB interface may draw up to 100mA from its upstream connect, to allow the interface to function when the remainder of the hub is powered down. The hub must be able to supply up to 500mA on all of its external downstream ports. Please refer to Universal Serial Specification Revision 2.0 for more details on designing compliant USB hub and host systems.

Over-Current protection devices such as fuses and PTC resistors (also called polyfuse or polyswitch) have slow trip times, high on-resistance, and lack the necessary circuitry for USB-required fault reporting.

The faster trip time of the RT9742 power distribution allows designers to design hubs that can operate through faults.

Copyright ©2020 Richtek Technology Corporation. All rights reserved. RICHTEK is a registered trademark of Richtek Technology Corporation.

The RT9742 provides low on-resistance and internal fault-reporting circuitry to meet voltage regulation and fault notification requirements.

Because the devices are also power switches, the designer of self-powered hubs has the flexibility to turn off power to output ports. Unlike a normal MOSFET, the devices have controlled rise and fall times to provide the needed inrush current limiting required for the bus-powered hub power switch.

Supply Filter/Bypass Capacitor

A 10µF low-ESR ceramic capacitor from V_{IN} to GND, located at the device is strongly recommended to prevent the input voltage drooping during hot-plug events. However, higher capacitor values will further reduce the voltage droop on the input. Furthermore, without the bypass capacitor, an output short may cause sufficient ringing on the input (from source lead inductance) to destroy the internal control circuitry. The input transient must not exceed 7V of the absolute maximum supply voltage even for a short duration.

Output Filter Capacitor

The output capacitance should be optimized for the different applications. For the USB application, the minimum output capacitance between VOUT and GND has been determining. Each downstream facing port is required at least 120µF to meet the minimum drop voltage of V_{BUS} (330mV). However, the maximum output capacitance is also constrained from the applications. The first is larger output capacitance causes higher inrush current during turn on period. Based on the acceptable inrush current and VOUT rising time, the maximum output capacitor is obtained. Second, the VIN spike is also considered as VOUT short-circuit occurring. Greater output capacitance induces greater VIN spike. Thus, the recommend output capacitance is defined from 120µF to 330µF.

For the general application, bypassing the output with a 0.01µF to 0.1µF ceramic capacitor improves the immunity of the device to short-circuit transients.

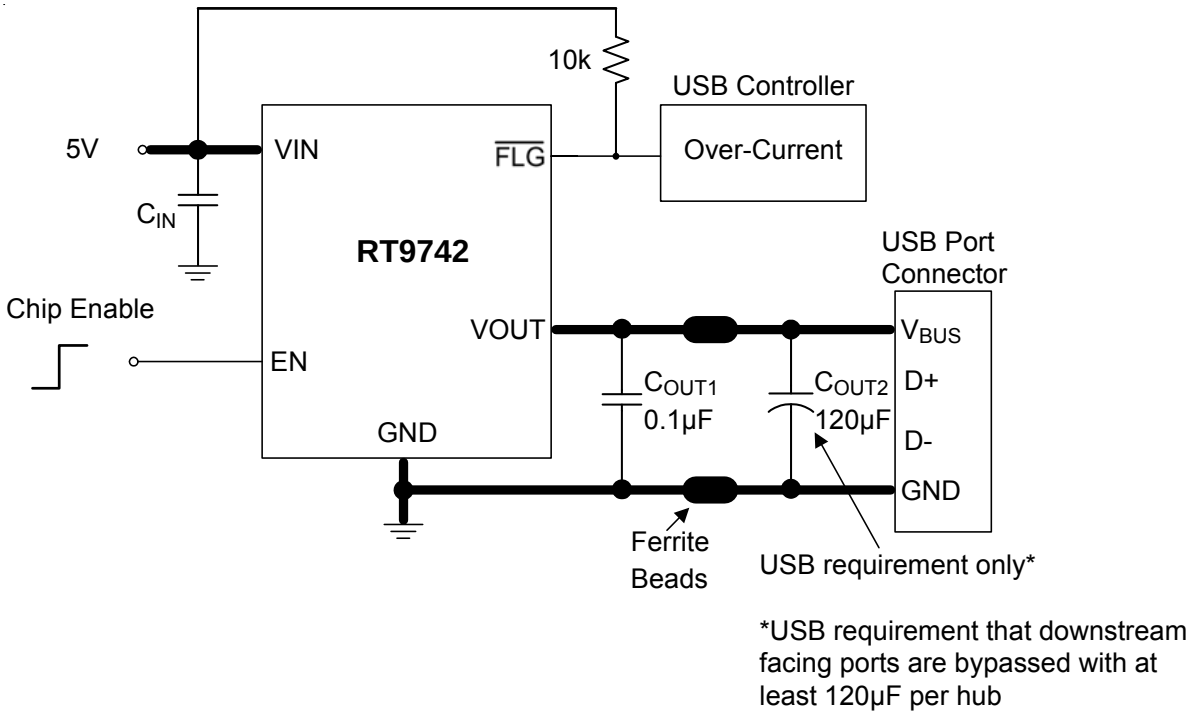

Figure 1. USB Power Switch Application Circuit

Copyright ©2020 Richtek Technology Corporation. All rights reserved. RICHTEK is a registered trademark of Richtek Technology Corporation.

Voltage Drop

The USB specification states a minimum port-output voltage in two locations on the bus, 4.75V out of a Self-Powered Hub port and 4.40V out of a Bus-Powered Hub port. As with the Self-Powered Hub, all resistive voltage drops for the Bus-Powered Hub must be accounted for to guarantee voltage regulation (see Figure 7-47 of Universal Serial Specification Revision 2.0).

The following calculation determines $V_{OUT(MIN)}$ for multiple ports (N_{PORTS}) ganged together through one switch (if using one switch per port, N_{PORTS} is equal to 1) :

$$V_{OUT\,(MIN)} = 4.75V - [\, I_I \times (4 \times R_{CONN} + 2 \times R_{CABLE}) \,] - (0.1A \times N_{PORTS} \times R_{SWITCH}) - V_{PCB}$$

Where

R_{CONN} = Resistance of connector contacts

(two contacts per connector)

R_{CABLE} = Resistance of upstream cable wires

(one 5V and one GND)

R_{SWITCH} = Resistance of power switch

V_{PCB} = PCB voltage drop

The USB specification defines the maximum resistance per contact (R_{CONN}) of the USB connector to be 30mΩ and the drop across the PCB and switch to be 100mV. This basically leaves two variables in the equation: the resistance of the switch and the resistance of the cable. If the hub consumes the maximum current (I_I) of 500mA, the maximum resistance of the cable is 90mΩ.

The resistance of the switch is defined as follows :

$$R_{SWITCH} = \{ 4.75V - 4.4V - [0.5A \times (4 \times 30m\Omega + 2 \times 90m\Omega) \,] - V_{PCB} \} \div (0.1A \times N_{PORTS})$$

$$= (200mV - V_{PCB}) \div (0.1A \times N_{PORTS})$$

If the voltage drop across the PCB is limited to 100mV, the maximum resistance for the switch is 250mΩ for four ports ganged together. The RT9742, with its maximum 100mΩ on-resistance over temperature, can fit the demand of this requirement.

Thermal Considerations

For continuous operation, do not exceed absolute maximum junction temperature. The maximum power dissipation depends on the thermal resistance of the IC package, PCB layout, rate of surrounding airflow, and difference between junction and ambient temperature. The maximum power dissipation can be calculated by the following formula :

$$P_{D(MAX)} = (T_{J(MAX)} - T_A) / \theta_{JA}$$

where $T_{J(MAX)}$ is the maximum junction temperature, T_A is the ambient temperature, and θ_{JA} is the junction to ambient thermal resistance.

For recommended operating condition specifications, the maximum junction temperature is 125°C. The junction to ambient thermal resistance, θ_{JA}, is layout dependent. For SOT-23-3 package, the thermal resistance, θ_{JA}, is 243.3°C/W on a standard JEDEC 51-7 four-layer thermal test board. For TSOT-23-5 package, the thermal resistance, θ_{JA}, is 203°C/W on a standard JEDEC 51-7 four-layer thermal test board. For TSOT-23-5 (FC) package, the thermal resistance, θ_{JA}, is 126.5°C/W on a standard JEDEC 51-7 four-layer thermal test board. The maximum power dissipation at T_A = 25°C can be calculated by the following formula :

$P_{D(MAX)}$ = (125°C – 25°C) / (243.3°C/W) = 0.41W for SOT-23-3 package

$P_{D(MAX)}$ = (125°C – 25°C) / (203°C/W) = 0.49W for TSOT-23-5 package

$P_{D(MAX)}$ = (125°C – 25°C) / (126.5°C/W) = 0.79W for TSOT-23-5 (FC) package

The maximum power dissipation depends on the operating ambient temperature for fixed $T_{J(MAX)}$ and thermal resistance, θ_{JA}. The derating curve in Figure 2 allows the designer to see the effect of rising ambient temperature on the maximum power dissipation.

Copyright ©2020 Richtek Technology Corporation. All rights reserved. RICHTEK is a registered trademark of Richtek Technology Corporation.

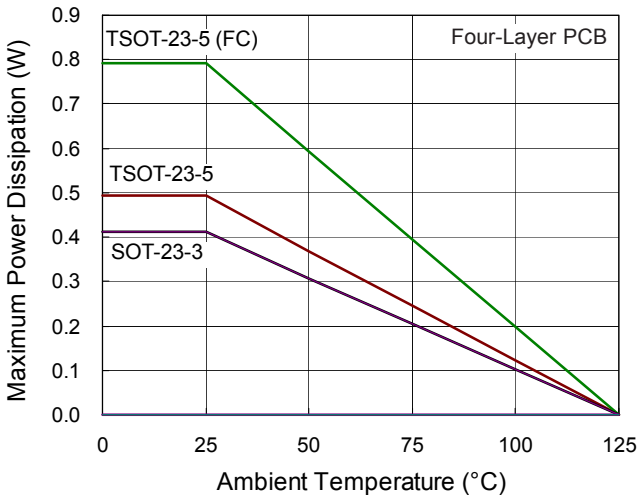

Figure 2. Derating Curve of Maximum Power Dissipation

Layout Consideration

In order to meet the voltage drop, droop, and EMI requirements, careful PCB layout is necessary. The following guidelines must be followed :

- Locate the ceramic bypass capacitors as close as possible to the VIN pins of the RT9742.
- Place a ground plane under all circuitry to lower both resistance and inductance and improve DC and transient performance (Use a separate ground and power plans if possible).
- Keep all V_{BUS} traces as short as possible and use at least 50-mil, 2 ounce copper for all V_{BUS} traces.
- Avoid vias as much as possible. If vias are necessary, make them as large as feasible.
- Place cuts in the ground plane between ports to help reduce the coupling of transients between ports.
- Locate the output capacitor and ferrite beads as close to the USB connectors as possible to lower impedance (mainly inductance) between the port and the capacitor and improve transient load performance.
- Locate the RT9742 as close as possible to the output port to limit switching noise.

Copyright ©2020 Richtek Technology Corporation. All rights reserved. RICHTEK is a registered trademark of Richtek Technology Corporation.

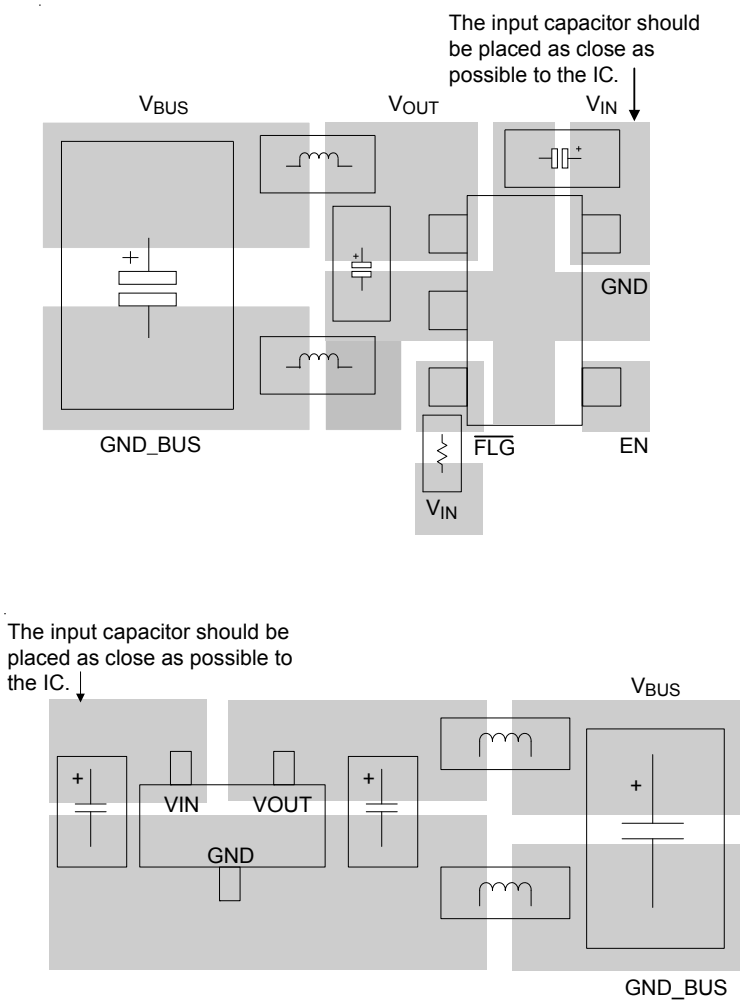

Figure 3. PCB Layout Guide

Copyright ©2020 Richtek Technology Corporation. All rights reserved. RICHTEK is a registered trademark of Richtek Technology Corporation.

Outline Dimension

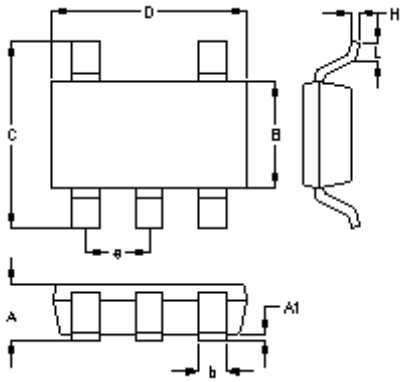

Symbol	Dimensions In Millimeters		Dimensions In Inches	
	Min	Max	Min	Max
A	0.700	1.000	0.028	0.039
A1	0.000	0.100	0.000	0.004
B	1.397	1.803	0.055	0.071
b	0.300	0.559	0.012	0.022
C	2.591	3.000	0.102	0.118
D	2.692	3.099	0.106	0.122
e	0.838	1.041	0.033	0.041
H	0.080	0.254	0.003	0.010
L	0.300	0.610	0.012	0.024

TSOT-23-5 Surface Mount Package

Copyright ©2020 Richtek Technology Corporation. All rights reserved. RICHTEK is a registered trademark of Richtek Technology Corporation.

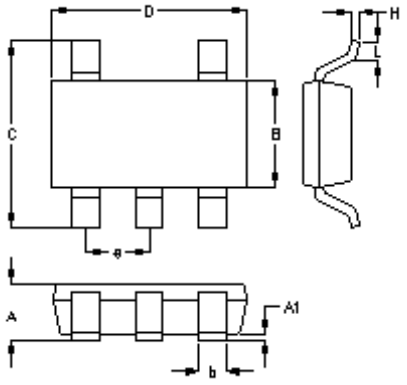

Symbol	Dimensions In Millimeters		Dimensions In Inches	
	Min	Max	Min	Max
A	0.700	1.000	0.028	0.039
A1	0.000	0.100	0.000	0.004
B	1.397	1.803	0.055	0.071
b	0.300	0.559	0.012	0.022
C	2.591	3.000	0.102	0.118
D	2.692	3.099	0.106	0.122
e	0.838	1.041	0.033	0.041
H	0.080	0.254	0.003	0.010
L	0.300	0.610	0.012	0.024

TSOT-23-5 (FC) Surface Mount Package

Copyright ©2020 Richtek Technology Corporation. All rights reserved. RICHTEK is a registered trademark of Richtek Technology Corporation.

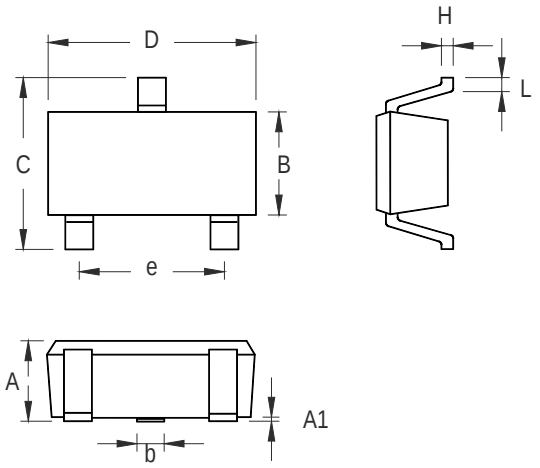

Symbol	Dimensions In Millimeters		Dimensions In Inches	
	Min	Max	Min	Max
A	0.889	1.295	0.035	0.051
A1	0.000	0.152	0.000	0.006
B	1.397	1.803	0.055	0.071
b	0.356	0.508	0.014	0.020
C	2.591	2.997	0.102	0.118
D	2.692	3.099	0.106	0.122
e	1.803	2.007	0.071	0.079
H	0.080	0.254	0.003	0.010
L	0.300	0.610	0.012	0.024

SOT-23-3 Surface Mount Package

Richtek Technology Corporation
14F, No. 8, Tai Yuen 1st Street, Chupei City
Hsinchu, Taiwan, R.O.C.
Tel: (8863)5526789

Richtek products are sold by description only. Customers should obtain the latest relevant information and data sheets before placing orders and should verify that such information is current and complete. Richtek cannot assume responsibility for use of any circuitry other than circuitry entirely embodied in a Richtek product. Information furnished by Richtek is believed to be accurate and reliable. However, no responsibility is assumed by Richtek or its subsidiaries for its use; nor for any infringements of patents or other rights of third parties which may result from its use. No license is granted by implication or otherwise under any patent or patent rights of Richtek or its subsidiaries.

Looking for pricing, stock, or lifecycle information?

Click below to explore more details on WIN SOURCE:

- View RT9742GGJ5F on WIN SOURCE
- Richtek USA Inc. Information

Optimize Your Supply Chain with WIN SOURCE Solutions

- Global Sourcing Solution
- Obsolete Management
- Cost Control Management
- Shortage Management
- Alternative Solution
- Excess Inventory Management