THE DATASHEET OF

BCW66HQTA

BCW66H

45V NPN SMALL SIGNAL TRANSISTOR IN SOT23

Features

- BV_{CEO} > 45V
- I_C = 800mA High Continuous Collector Current
- Low Saturation Voltage $V_{CE(sat)}$ < 300mV @ 100mA
- Complementary PNP Type: BCW68H
- **Totally Lead-Free & Fully RoHS compliant (Notes 1 & 2)**
- **Halogen and Antimony Free. "Green" Device (Note 3)**
- **Qualified to AEC-Q101 Standards for High Reliability**
- **PPAP capable (Note 4)**

Mechanical Data

- Case: SOT23
- Case Material: molded plastic, "Green" molding compound
- UL Flammability Classification Rating 94V-0
- Moisture Sensitivity: Level 1 per J-STD-020
- Terminals: Finish – Matte Tin Plated Leads, Solderable per MIL-STD-202, Method 208 e3
- Weight 0.008 grams (approximate)

SOT23



Top View

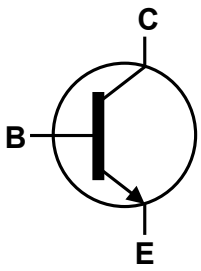

Device Symbol

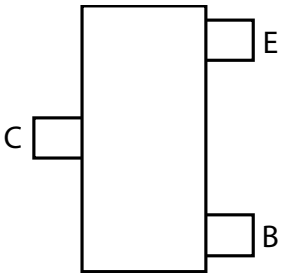

Top View
Pin-Out

Ordering Information (Notes 4 & 5)

Part Number	Compliance	Marking	Reel size (inches)	Tape width (mm)	Quantity per reel
BCW66HTA	AEC-Q101	EH	7	8	3,000
BCW66HQTA	Automotive	EH	7	8	3,000

Notes:
1. No purposely added lead. Fully EU Directive 2002/95/EC (RoHS) & 2011/65/EU (RoHS 2) compliant.
2. See http://www.diodes.com/quality/lead_free.html for more information about Diodes Incorporated's definitions of Halogen- and Antimony-free, "Green" and Lead-free.
3. Halogen- and Antimony-free "Green" products are defined as those which contain <900ppm bromine, <900ppm chlorine (<1500ppm total Br + Cl) and <1000ppm antimony compounds.
4. Automotive products are AEC-Q101 qualified and are PPAP capable. Automotive, AEC-Q101 and standard products are electrically and thermally the same, except where specified. For more information, please refer to http://www.diodes.com/quality/product_compliance_definitions/.
5. For packaging details, go to our website at http://www.diodes.com/products/packages.html.

Marking Information

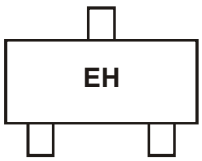

EH = Product Type Marking Code

© Diodes Incorporated

Maximum Ratings (@T_A = +25°C, unless otherwise specified.)

Characteristic	Symbol	Value	Unit
Collector-Base Voltage	V_{CBO}	75	V
Collector-Emitter Voltage	V_{CEO}	45	V
Emitter-Base Voltage	V_{EBO}	7	V
Continuous Collector Current	I_C	800	mA
Peak Pulse Current	I_{CM}	1000	mA
Base Current	I_B	100	mA

Thermal Characteristics (@T_A = +25°C, unless otherwise specified.)

Characteristic		Symbol	Value	Unit
Power Dissipation	(Note 6)	P_D	310	mW
	(Note 7)		350	
Thermal Resistance, Junction to Ambient	(Note 6)	$R_{\theta JA}$	403	°C/W
	(Note 7)		357	
Thermal Resistance, Junction to Leads	(Note 8)	$R_{\theta JL}$	350	°C/W
Operating and Storage Temperature Range		T_J,T_{STG}	-55 to +150	°C

Notes:
6. For a device mounted on minimum recommended pad layout 1oz weight copper that is on a single-sided FR4 PCB; device is measured under still air conditions whilst operating in a steady-state.
7. Same as Note 6, except the device is mounted on 15mm X 15mm 1oz copper.
8. Thermal resistance from junction to solder-point (at the end of the leads).

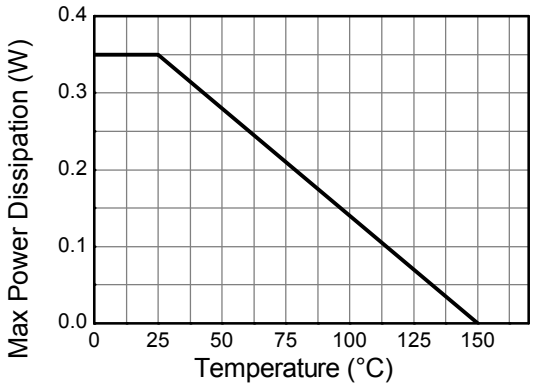

Derating Curve

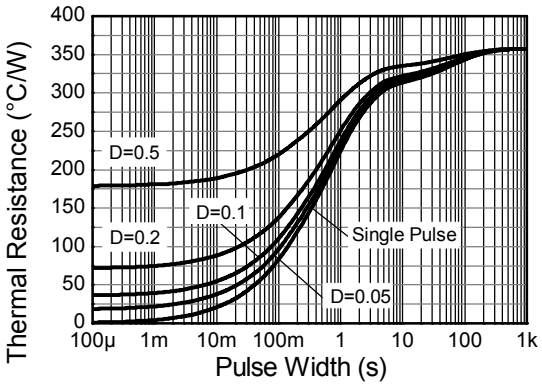

Transient Thermal Impedance

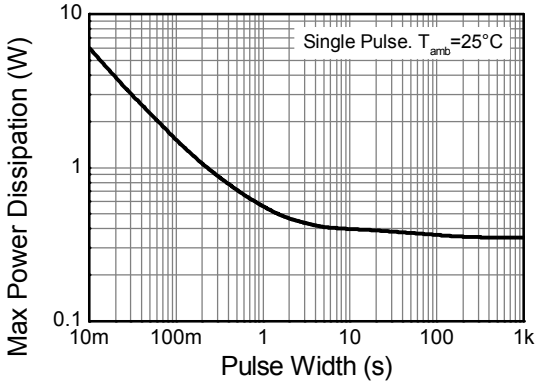

Pulse Power Dissipation

© Diodes Incorporated

Electrical Characteristics (@T_A = +25°C, unless otherwise specified.)

Characteristic	Symbol	Min	Typ	Max	Unit	Test Condition
OFF CHARACTERISTICS						
Collector-Base Breakdown Voltage	BV_{CES}	75	—	—	V	I_C = 10μA
Collector-Emitter Breakdown Voltage (base open) (Note 9)	BV_{CEO}	45	—	—	V	I_{CEO} = 10mA
Emitter-Base Breakdown Voltage	BV_{EBO}	7	—	—	V	I_{EBO} = 10μA
Collector-Emitter Cut-Off Current	I_{CES}	— —	<1 —	20 20	nA μA	V_{CES} = 45V V_{CES} = 45V, T_A = +150°C
Emitter-Base Cut-Off Current	I_{EBO}	—	<1	20	nA	V_{EBO} = 5.6V
ON CHARACTERISTICS (Note 9)						
Static Forward Current Transfer Ratio	h_{FE}	80 180 250 100	— — 350 —	— — 630 —	—	I_C = 100μA, V_{CE} = 10V I_C = 10mA, V_{CE} = 1V I_C = 100mA, V_{CE} = 1V I_C = 500mA, V_{CE} = 2V
Collector-Emitter Saturation Voltage	$V_{CE(sat)}$	— —	— —	0.3 0.7	mV	I_C = 100mA, I_B = 10mA I_C = 500mA, I_B = 50mA
Base-Emitter Saturation Voltage	$V_{BE(sat)}$	—	—	2	V	I_C = 500mA, I_B = 50mA
SMALL SIGNAL CHARACTERISTICS (Note 9)						
Transition Frequency	f_T	100	—	—	MHz	I_C = 20mA, V_{CE} = 10V, f = 100MHz
Output Capacitance	C_{obo}	—	8	12	pF	V_{CB} = 10V, f = 1MHz
Input Capacitance	C_{ibo}	—	—	80	pF	V_{CB} = -0.5V, f = 1MHz
Noise Figure	N	—	2	10	dB	I_C = 0.2mA. V_{CE} = 5V, R_G = 1KΩ
Turn-On Time	t_{on}	—	—	100	ns	I_C = 150mA. I_{B1} = -I_{B2} = 15mA R_L = 150Ω
Turn-Off Time	t_{off}	—	—	400	ns	

Notes: 9. Measured under pulsed conditions. Pulse width ≤ 300μs. Duty cycle ≤ 2%

© Diodes Incorporated

Package Outline Dimensions

Please see AP02002 at http://www.diodes.com/datasheets/ap02002.pdf for latest version.

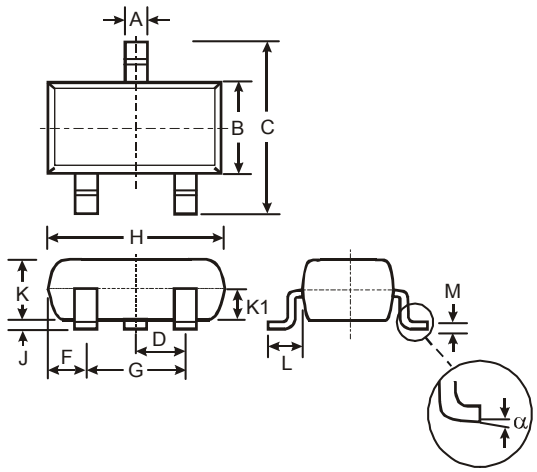

SOT23			
Dim	**Min**	**Max**	**Typ**
A	0.37	0.51	0.40
B	1.20	1.40	1.30
C	2.30	2.50	2.40
D	0.89	1.03	0.915
F	0.45	0.60	0.535
G	1.78	2.05	1.83
H	2.80	3.00	2.90
J	0.013	0.10	0.05
K	0.903	1.10	1.00
K1	-	-	0.400
L	0.45	0.61	0.55
M	0.085	0.18	0.11
α	0°	8°	-
All Dimensions in mm			

Suggested Pad Layout

Please see AP02001 at http://www.diodes.com/datasheets/ap02001.pdf for the latest version.

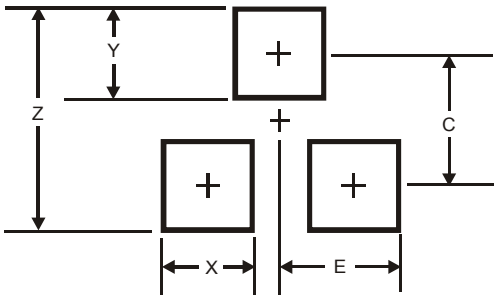

Dimensions	Value (in mm)
Z	2.9
X	0.8
Y	0.9
C	2.0
E	1.35

© Diodes Incorporated

IMPORTANT NOTICE

DIODES INCORPORATED MAKES NO WARRANTY OF ANY KIND, EXPRESS OR IMPLIED, WITH REGARDS TO THIS DOCUMENT, INCLUDING, BUT NOT LIMITED TO, THE IMPLIED WARRANTIES OF MERCHANTABILITY AND FITNESS FOR A PARTICULAR PURPOSE (AND THEIR EQUIVALENTS UNDER THE LAWS OF ANY JURISDICTION).

Diodes Incorporated and its subsidiaries reserve the right to make modifications, enhancements, improvements, corrections or other changes without further notice to this document and any product described herein. Diodes Incorporated does not assume any liability arising out of the application or use of this document or any product described herein; neither does Diodes Incorporated convey any license under its patent or trademark rights, nor the rights of others. Any Customer or user of this document or products described herein in such applications shall assume all risks of such use and will agree to hold Diodes Incorporated and all the companies whose products are represented on Diodes Incorporated website, harmless against all damages.

Diodes Incorporated does not warrant or accept any liability whatsoever in respect of any products purchased through unauthorized sales channel. Should Customers purchase or use Diodes Incorporated products for any unintended or unauthorized application, Customers shall indemnify and hold Diodes Incorporated and its representatives harmless against all claims, damages, expenses, and attorney fees arising out of, directly or indirectly, any claim of personal injury or death associated with such unintended or unauthorized application.

Products described herein may be covered by one or more United States, international or foreign patents pending. Product names and markings noted herein may also be covered by one or more United States, international or foreign trademarks.

This document is written in English but may be translated into multiple languages for reference. Only the English version of this document is the final and determinative format released by Diodes Incorporated.

LIFE SUPPORT

Diodes Incorporated products are specifically not authorized for use as critical components in life support devices or systems without the express written approval of the Chief Executive Officer of Diodes Incorporated. As used herein:

A. Life support devices or systems are devices or systems which:

1. are intended to implant into the body, or
2. support or sustain life and whose failure to perform when properly used in accordance with instructions for use provided in the labeling can be reasonably expected to result in significant injury to the user.

B. A critical component is any component in a life support device or system whose failure to perform can be reasonably expected to cause the failure of the life support device or to affect its safety or effectiveness.

Customers represent that they have all necessary expertise in the safety and regulatory ramifications of their life support devices or systems, and acknowledge and agree that they are solely responsible for all legal, regulatory and safety-related requirements concerning their products and any use of Diodes Incorporated products in such safety-critical, life support devices or systems, notwithstanding any devices- or systems-related information or support that may be provided by Diodes Incorporated. Further, Customers must fully indemnify Diodes Incorporated and its representatives against any damages arising out of the use of Diodes Incorporated products in such safety-critical, life support devices or systems.

Copyright © 2013, Diodes Incorporated

www.diodes.com

Looking for pricing, stock, or lifecycle information?

Click below to explore more details on WIN SOURCE:

- View BCW66HQTA on WIN SOURCE
- Diodes Incorporated Information

Optimize Your Supply Chain with WIN SOURCE Solutions

- Global Sourcing Solution
- Obsolete Management
- Cost Control Management
- Shortage Management
- Alternative Solution
- Excess Inventory Management