WINSOURCE ELECTRONICS

THE DATASHEET OF

5ASXBB5D4F40I5N

Explore more resources
Altera® Design Hub

Arria V Device Datasheet

Online Version
Send Feedback

AV-51002

683022
2019.04.26

Contents

1. Arria® V GX, GT, SX, and ST Device Datasheet....4
1.1. Electrical Characteristics....4
1.1.1. Operating Conditions....4
1.2. Switching Characteristics....24
1.2.1. Transceiver Performance Specifications....25
1.2.2. Core Performance Specifications....44
1.2.3. Periphery Performance....50
1.2.4. HPS Specifications....58
1.3. Configuration Specifications....75
1.3.1. POR Specifications....75
1.3.2. FPGA JTAG Configuration Timing....76
1.3.3. FPP Configuration Timing....76
1.3.4. Active Serial (AS) Configuration Timing....80
1.3.5. DCLK Frequency Specification in the AS Configuration Scheme....81
1.3.6. Passive Serial (PS) Configuration Timing....82
1.3.7. Initialization....83
1.3.8. Configuration Files....84
1.3.9. Minimum Configuration Time Estimation....85
1.3.10. Remote System Upgrades....86
1.3.11. User Watchdog Internal Oscillator Frequency Specifications....86
1.4. I/O Timing....86
1.4.1. Programmable IOE Delay....87
1.4.2. Programmable Output Buffer Delay....88
1.5. Glossary....88
1.6. Arria V GX, GT, SX, and ST Device Datasheet Revision History....95

2. Arria V GZ Device Datasheet....101
2.1. Electrical Characteristics....101
2.1.1. Operating Conditions....101
2.2. Switching Characteristics....119
2.2.1. Transceiver Performance Specifications....119
2.2.2. Core Performance Specifications....134

2.2.3. Periphery Performance 140
2.3. Configuration Specification 152
2.3.1. POR Specifications 152
2.3.2. JTAG Configuration Specifications 152
2.3.3. Fast Passive Parallel (FPP) Configuration Timing 153
2.3.4. Active Serial Configuration Timing 161
2.3.5. Passive Serial Configuration Timing 164
2.3.6. Initialization 166
2.3.7. Configuration Files 166
2.3.8. Remote System Upgrades Circuitry Timing Specification 167
2.3.9. User Watchdog Internal Oscillator Frequency Specification 168
2.4. I/O Timing 168
2.4.1. Programmable IOE Delay 169
2.4.2. Programmable Output Buffer Delay 170
2.5. Glossary 170
2.6. Arria V GZ Device Datasheet Revision History 176

AV-51002 | 2019.04.26

Send Feedback

1. Arria® V GX, GT, SX, and ST Device Datasheet

This datasheet describes the electrical characteristics, switching characteristics, configuration specifications, and I/O timing for Arria® V devices.

Arria V devices are offered in commercial and industrial grades. Commercial devices are offered in –C4 (fastest), –C5, and –C6 speed grades. Industrial grade devices are offered in the –I3 and –I5 speed grades.

Related Information

Arria V Device Overview
Provides more information about the densities and packages of devices in the Arria V family.

1.1. Electrical Characteristics

The following sections describe the operating conditions and power consumption of Arria V devices.

1.1.1. Operating Conditions

Arria V devices are rated according to a set of defined parameters. To maintain the highest possible performance and reliability of the Arria V devices, you must consider the operating requirements described in this section.

1.1.1.1. Absolute Maximum Ratings

This section defines the maximum operating conditions for Arria V devices. The values are based on experiments conducted with the devices and theoretical modeling of breakdown and damage mechanisms.

The functional operation of the device is not implied for these conditions.

Caution: Conditions outside the range listed in the following table may cause permanent damage to the device. Additionally, device operation at the absolute maximum ratings for extended periods of time may have adverse effects on the device.

© Altera Corporation. Altera, the Altera logo, the 'a' logo, and other Altera marks are trademarks of Altera Corporation. Altera reserves the right to make changes to any products and services at any time without notice. Altera assumes no responsibility or liability arising out of the application or use of any information, product, or service described herein except as expressly agreed to in writing by Altera. Altera customers are advised to obtain the latest version of device specifications before relying on any published information and before placing orders for products or services.
*Other names and brands may be claimed as the property of others.

Table 1. Absolute Maximum Ratings for Arria V Devices

Symbol	Description	Minimum	Maximum	Unit
V_{CC}	Core voltage power supply	–0.50	1.43	V
V_{CCP}	Periphery circuitry, PCI Express* (PCIe*) hard IP block, and transceiver physical coding sublayer (PCS) power supply	–0.50	1.43	V
V_{CCPGM}	Configuration pins power supply	–0.50	3.90	V
V_{CC_AUX}	Auxiliary supply	–0.50	3.25	V
V_{CCBAT}	Battery back-up power supply for design security volatile key register	–0.50	3.90	V
V_{CCPD}	I/O pre-driver power supply	–0.50	3.90	V
V_{CCIO}	I/O power supply	–0.50	3.90	V
V_{CCD_FPLL}	Phase-locked loop (PLL) digital power supply	–0.50	1.80	V
V_{CCA_FPLL}	PLL analog power supply	–0.50	3.25	V
V_{CCA_GXB}	Transceiver high voltage power	–0.50	3.25	V
V_{CCH_GXB}	Transmitter output buffer power	–0.50	1.80	V
V_{CCR_GXB}	Receiver power	–0.50	1.50	V
V_{CCT_GXB}	Transmitter power	–0.50	1.50	V
V_{CCL_GXB}	Transceiver clock network power	–0.50	1.50	V
V_I	DC input voltage	–0.50	3.80	V
V_{CC_HPS}	HPS core voltage and periphery circuitry power supply	–0.50	1.43	V
V_{CCPD_HPS}	HPS I/O pre-driver power supply	–0.50	3.90	V
V_{CCIO_HPS}	HPS I/O power supply	–0.50	3.90	V
$V_{CCRSTCLK_HPS}$	HPS reset and clock input pins power supply	–0.50	3.90	V
V_{CCPLL_HPS}	HPS PLL analog power supply	–0.50	3.25	V
$V_{CC_AUX_SHARED}$	HPS auxiliary power supply	–0.50	3.25	V

continued...

Symbol	Description	Minimum	Maximum	Unit
I_{OUT}	DC output current per pin	–25	40	mA
T_J	Operating junction temperature	–55	125	°C
T_{STG}	Storage temperature (no bias)	–65	150	°C

1.1.1.2. Maximum Allowed Overshoot and Undershoot Voltage

During transitions, input signals may overshoot to the voltage listed in the following table and undershoot to –2.0 V for input currents less than 100 mA and periods shorter than 20 ns.

The maximum allowed overshoot duration is specified as a percentage of high time over the lifetime of the device. A DC signal is equivalent to 100% duty cycle.

For example, a signal that overshoots to 4.00 V can only be at 4.00 V for ~15% over the lifetime of the device; for a device lifetime of 10 years, this amounts to 1.5 years.

Table 2. Maximum Allowed Overshoot During Transitions for Arria V Devices

This table lists the maximum allowed input overshoot voltage and the duration of the overshoot voltage as a percentage of device lifetime.

Symbol	Description	Condition (V)	Overshoot Duration as % of High Time	Unit
Vi (AC)	AC input voltage	3.8	100	%
		3.85	68	%
		3.9	45	%
		3.95	28	%
		4	15	%
		4.05	13	%
		4.1	11	%
		4.15	9	%
		4.2	8	%
		4.25	7	%
		4.3	5.4	%

continued...

Symbol	Description	Condition (V)	Overshoot Duration as % of High Time	Unit
		4.35	3.2	%
		4.4	1.9	%
		4.45	1.1	%
		4.5	0.6	%
		4.55	0.4	%
		4.6	0.2	%

For an overshoot of 3.8 V, the percentage of high time for the overshoot can be as high as 100% over a 10-year period. Percentage of high time is calculated as ([delta T]/T) × 100. This 10-year period assumes that the device is always turned on with 100% I/O toggle rate and 50% duty cycle signal.

Figure 1. Arria V Devices Overshoot Duration

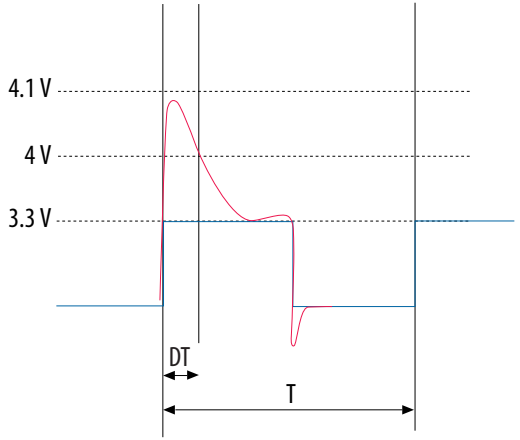

1.1.1.3. Recommended Operating Conditions

This section lists the functional operation limits for the AC and DC parameters for Arria V devices.

1.1.1.3.1. Recommended Operating Conditions

Table 3. Recommended Operating Conditions for Arria V Devices

This table lists the steady-state voltage values expected from Arria V devices. Power supply ramps must all be strictly monotonic, without plateaus.

Symbol	Description	Condition	Minimum(1)	Typical	Maximum(1)	Unit
V_{CC}	Core voltage power supply	–C4, –I5, –C5, –C6	1.07	1.1	1.13	V
		–I3	1.12	1.15	1.18	V
V_{CCP}	Periphery circuitry, PCIe hard IP block, and transceiver PCS power supply	–C4, –I5, –C5, –C6	1.07	1.1	1.13	V
		–I3	1.12	1.15	1.18	V
V_{CCPGM}	Configuration pins power supply	3.3 V	3.135	3.3	3.465	V
		3.0 V	2.85	3.0	3.15	V
		2.5 V	2.375	2.5	2.625	V
		1.8 V	1.71	1.8	1.89	V
V_{CC_AUX}	Auxiliary supply	—	2.375	2.5	2.625	V
V_{CCBAT}(2)	Battery back-up power supply (For design security volatile key register)	—	1.2	—	3.0	V
V_{CCPD}(3)	I/O pre-driver power supply	3.3 V	3.135	3.3	3.465	V
		3.0 V	2.85	3.0	3.15	V
		2.5 V	2.375	2.5	2.625	V
V_{CCIO}	I/O buffers power supply	3.3 V	3.135	3.3	3.465	V

continued...

(1) The power supply value describes the budget for the DC (static) power supply tolerance and does not include the dynamic tolerance requirements. Refer to the PDN tool for the additional budget for the dynamic tolerance requirements.

(2) If you do not use the design security feature in Arria V devices, connect V_{CCBAT} to a 1.5-V, 2.5-V, or 3.0-V power supply. Arria V power-on reset (POR) circuitry monitors V_{CCBAT}. Arria V devices do not exit POR if V_{CCBAT} is not powered up.

(3) V_{CCPD} must be 2.5 V when V_{CCIO} is 2.5, 1.8, 1.5, 1.35, 1.25, or 1.2 V. V_{CCPD} must be 3.0 V when V_{CCIO} is 3.0 V. V_{CCPD} must be 3.3 V when V_{CCIO} is 3.3 V.

Symbol	Description	Condition	Minimum(1)	Typical	Maximum(1)	Unit
		3.0 V	2.85	3.0	3.15	V
		2.5 V	2.375	2.5	2.625	V
		1.8 V	1.71	1.8	1.89	V
		1.5 V	1.425	1.5	1.575	V
		1.35 V	1.283	1.35	1.418	V
		1.25 V	1.19	1.25	1.31	V
		1.2 V	1.14	1.2	1.26	V
V_{CCD_FPLL}	PLL digital voltage regulator power supply	—	1.425	1.5	1.575	V
V_{CCA_FPLL}	PLL analog voltage regulator power supply	—	2.375	2.5	2.625	V
V_I	DC input voltage	—	–0.5	—	3.6	V
V_O	Output voltage	—	0	—	V_{CCIO}	V
T_J	Operating junction temperature	Commercial	0	—	85	°C
		Industrial	–40	—	100	°C
t_{RAMP}(4)	Power supply ramp time	Standard POR	200 µs	—	100 ms	—
		Fast POR	200 µs	—	4 ms	—

(1) The power supply value describes the budget for the DC (static) power supply tolerance and does not include the dynamic tolerance requirements. Refer to the PDN tool for the additional budget for the dynamic tolerance requirements.

(4) This is also applicable to HPS power supply. For HPS power supply, refer to t_{RAMP} specifications for standard POR when `HPS_PORSEL` = 0 and t_{RAMP} specifications for fast POR when `HPS_PORSEL` = 1.

1.1.1.3.2. Transceiver Power Supply Operating Conditions

Table 4. Transceiver Power Supply Operating Conditions for Arria V Devices

Symbol	Description	Minimum[5]	Typical	Maximum[5]	Unit
V_{CCA_GXBL}	Transceiver high voltage power (left side)	2.375	2.500	2.625	V
V_{CCA_GXBR}	Transceiver high voltage power (right side)				
V_{CCR_GXBL}	GX and SX speed grades—receiver power (left side)	1.08/1.12	1.1/1.15[6]	1.14/1.18	V
V_{CCR_GXBR}	GX and SX speed grades—receiver power (right side)				
V_{CCR_GXBL}	GT and ST speed grades—receiver power (left side)	1.17	1.20	1.23	V
V_{CCR_GXBR}	GT and ST speed grades—receiver power (right side)				
V_{CCT_GXBL}	GX and SX speed grades—transmitter power (left side)	1.08/1.12	1.1/1.15[6]	1.14/1.18	V
V_{CCT_GXBR}	GX and SX speed grades—transmitter power (right side)				
V_{CCT_GXBL}	GT and ST speed grades—transmitter power (left side)	1.17	1.20	1.23	V
V_{CCT_GXBR}	GT and ST speed grades—transmitter power (right side)				
V_{CCH_GXBL}	Transmitter output buffer power (left side)	1.425	1.500	1.575	V
V_{CCH_GXBR}	Transmitter output buffer power (right side)				
V_{CCL_GXBL}	GX and SX speed grades—clock network power (left side)	1.08/1.12	1.1/1.15[6]	1.14/1.18	V
V_{CCL_GXBR}	GX and SX speed grades—clock network power (right side)				
V_{CCL_GXBL}	GT and ST speed grades—clock network power (left side)	1.17	1.20	1.23	V
V_{CCL_GXBR}	GT and ST speed grades—clock network power (right side)				

(5) The power supply value describes the budget for the DC (static) power supply tolerance and does not include the dynamic tolerance requirements. Refer to the PDN tool for the additional budget for the dynamic tolerance requirements.

(6) For data rate <=3.2 Gbps, connect $V_{CCR_GXBL/R}$, $V_{CCT_GXBL/R}$, or $V_{CCL_GXBL/R}$ to either 1.1-V or 1.15-V power supply. For data rate >3.2 Gbps, connect $V_{CCR_GXBL/R}$, $V_{CCT_GXBL/R}$, or $V_{CCL_GXBL/R}$ to a 1.15-V power supply. For details, refer to the *Arria V GT, GX, ST, and SX Device Family Pin Connection Guidelines*.

Related Information

Arria V GT, GX, ST, and SX Device Family Pin Connection Guidelines
Provides more information about the power supply connection for different data rates.

1.1.1.3.3. HPS Power Supply Operating Conditions

Table 5. HPS Power Supply Operating Conditions for Arria V SX and ST Devices

This table lists the steady-state voltage and current values expected from Arria V system-on-a-chip (SoC) devices with Arm*-based hard processor system (HPS). Power supply ramps must all be strictly monotonic, without plateaus. Refer to *Recommended Operating Conditions for Arria V Devices* table for the steady-state voltage values expected from the FPGA portion of the Arria V SoC devices.

Symbol	Description	Condition	Minimum(7)	Typical	Maximum(7)	Unit
V_{CC_HPS}	HPS core voltage and periphery circuitry power supply	–C4, –I5, –C5, –C6	1.07	1.1	1.13	V
		–I3	1.12	1.15	1.18	V
V_{CCPD_HPS} (8)	HPS I/O pre-driver power supply	3.3 V	3.135	3.3	3.465	V
		3.0 V	2.85	3.0	3.15	V
		2.5 V	2.375	2.5	2.625	V
V_{CCIO_HPS}	HPS I/O buffers power supply	3.3 V	3.135	3.3	3.465	V
		3.0 V	2.85	3.0	3.15	V
		2.5 V	2.375	2.5	2.625	V
		1.8 V	1.71	1.8	1.89	V
		1.5 V	1.425	1.5	1.575	V
		1.35 V (9)	1.283	1.35	1.418	V

continued...

(7) The power supply value describes the budget for the DC (static) power supply tolerance and does not include the dynamic tolerance requirements. Refer to the PDN tool for the additional budget for the dynamic tolerance requirements.

(8) V_{CCPD_HPS} must be 2.5 V when V_{CCIO_HPS} is 2.5, 1.8, 1.5, or 1.2 V. V_{CCPD_HPS} must be 3.0 V when V_{CCIO_HPS} is 3.0 V. V_{CCPD_HPS} must be 3.3 V when V_{CCIO_HPS} is 3.3 V.

Symbol	Description	Condition	Minimum(7)	Typical	Maximum(7)	Unit
		1.2 V	1.14	1.2	1.26	V
$V_{CCRSTCLK_HPS}$	HPS reset and clock input pins power supply	3.3 V	3.135	3.3	3.465	V
		3.0 V	2.85	3.0	3.15	V
		2.5 V	2.375	2.5	2.625	V
		1.8 V	1.71	1.8	1.89	V
V_{CCPLL_HPS}	HPS PLL analog voltage regulator power supply	—	2.375	2.5	2.625	V
$V_{CC_AUX_SHARED}$	HPS auxiliary power supply	—	2.375	2.5	2.625	V

Related Information

Recommended Operating Conditions on page 8
Provides the steady-state voltage values for the FPGA portion of the device.

1.1.1.4. DC Characteristics

1.1.1.4.1. Supply Current and Power Consumption

Intel offers two ways to estimate power for your design—the Excel-based Early Power Estimator (EPE) and the Intel® Quartus® Prime Power Analyzer feature.

Use the Excel-based EPE before you start your design to estimate the supply current for your design. The EPE provides a magnitude estimate of the device power because these currents vary greatly with the resources you use.

(7) The power supply value describes the budget for the DC (static) power supply tolerance and does not include the dynamic tolerance requirements. Refer to the PDN tool for the additional budget for the dynamic tolerance requirements.

(9) V_{CCIO_HPS} 1.35 V is supported for HPS row I/O bank only.

The Intel Quartus Prime Power Analyzer provides better quality estimates based on the specifics of the design after you complete place-and-route. The Power Analyzer can apply a combination of user-entered, simulation-derived, and estimated signal activities that, when combined with detailed circuit models, yields very accurate power estimates.

Related Information

- Early Power Estimator User Guide
  Provides more information about power estimation tools.
- Power Analysis chapter, Intel Quartus Prime Handbook
  Provides more information about power estimation tools.

1.1.1.4.2. I/O Pin Leakage Current

Table 6. I/O Pin Leakage Current for Arria V Devices

Symbol	Description	Condition	Min	Typ	Max	Unit
I_I	Input pin	V_I = 0 V to $V_{CCIOMAX}$	–30	—	30	µA
I_{OZ}	Tri-stated I/O pin	V_O = 0 V to $V_{CCIOMAX}$	–30	—	30	µA

1.1.1.4.3. Bus Hold Specifications

Table 7. Bus Hold Parameters for Arria V Devices

The bus-hold trip points are based on calculated input voltages from the JEDEC* standard.

Parameter	Symbol	Condition	V_{CCIO} (V)												Unit
			1.2		1.5		1.8		2.5		3.0		3.3		
			Min	Max	Min	Max	Min	Max	Min	Max	Min	Max	Min	Max	
Bus-hold, low, sustaining current	I_{SUSL}	$V_{IN} > V_{IL}$ (max)	8	—	12	—	30	—	50	—	70	—	70	—	µA
Bus-hold, high, sustaining current	I_{SUSH}	$V_{IN} < V_{IH}$ (min)	–8	—	–12	—	–30	—	–50	—	–70	—	–70	—	µA

continued...

Parameter	Symbol	Condition	V_{CCIO} (V)												Unit
			1.2		1.5		1.8		2.5		3.0		3.3		
			Min	Max	Min	Max	Min	Max	Min	Max	Min	Max	Min	Max	
Bus-hold, low, overdrive current	I_{ODL}	0 V < V_{IN} < V_{CCIO}	—	125	—	175	—	200	—	300	—	500	—	500	µA
Bus-hold, high, overdrive current	I_{ODH}	0 V <V_{IN} <V_{CCIO}	—	–125	—	–175	—	–200	—	–300	—	–500	—	–500	µA
Bus-hold trip point	V_{TRIP}	—	0.3	0.9	0.375	1.125	0.68	1.07	0.7	1.7	0.8	2	0.8	2	V

1.1.1.4.4. OCT Calibration Accuracy Specifications

If you enable on-chip termination (OCT) calibration, calibration is automatically performed at power up for I/Os connected to the calibration block.

Table 8. OCT Calibration Accuracy Specifications for Arria V Devices

Calibration accuracy for the calibrated on-chip series termination (R_S OCT) and on-chip parallel termination (R_T OCT) are applicable at the moment of calibration. When process, voltage, and temperature (PVT) conditions change after calibration, the tolerance may change.

Symbol	Description	Condition (V)	Calibration Accuracy			Unit
			–I3, –C4	–I5, –C5	–C6	
25-Ω R_S	Internal series termination with calibration (25-Ω setting)	V_{CCIO} = 3.0, 2.5, 1.8, 1.5, 1.2	±15	±15	±15	%
50-Ω R_S	Internal series termination with calibration (50-Ω setting)	V_{CCIO} = 3.0, 2.5, 1.8, 1.5, 1.2	±15	±15	±15	%
34-Ω and 40-Ω R_S	Internal series termination with calibration (34-Ω and 40-Ω setting)	V_{CCIO} = 1.5, 1.35, 1.25, 1.2	±15	±15	±15	%
48-Ω, 60-Ω, and 80-Ω R_S	Internal series termination with calibration (48-Ω, 60-Ω, and 80-Ω setting)	V_{CCIO} = 1.2	±15	±15	±15	%
50-Ω R_T	Internal parallel termination with calibration (50-Ω setting)	V_{CCIO} = 2.5, 1.8, 1.5, 1.2	–10 to +40	–10 to +40	–10 to +40	%

continued...

Symbol	Description	Condition (V)	Calibration Accuracy			Unit
			–I3, –C4	–I5, –C5	–C6	
20-Ω, 30-Ω, 40-Ω,60-Ω, and 120-Ω R_T	Internal parallel termination with calibration (20-Ω, 30-Ω, 40-Ω, 60-Ω, and 120-Ω setting)	V_{CCIO} = 1.5, 1.35, 1.25	–10 to +40	–10 to +40	–10 to +40	%
60-Ω and 120-Ω R_T	Internal parallel termination with calibration (60-Ω and 120-Ω setting)	V_{CCIO} = 1.2	–10 to +40	–10 to +40	–10 to +40	%
25-Ω $R_{S_left_shift}$	Internal left shift series termination with calibration (25-Ω $R_{S_left_shift}$ setting)	V_{CCIO} = 3.0, 2.5, 1.8, 1.5, 1.2	±15	±15	±15	%

1.1.1.4.5. OCT Without Calibration Resistance Tolerance Specifications

Table 9. OCT Without Calibration Resistance Tolerance Specifications for Arria V Devices

This table lists the Arria V OCT without calibration resistance tolerance to PVT changes.

Symbol	Description	Condition (V)	Resistance Tolerance			Unit
			–I3, –C4	–I5, –C5	–C6	
25-Ω R_S	Internal series termination without calibration (25-Ω setting)	V_{CCIO} = 3.0, 2.5	±30	±40	±40	%
25-Ω R_S	Internal series termination without calibration (25-Ω setting)	V_{CCIO} = 1.8, 1.5	±30	±40	±40	%
25-Ω R_S	Internal series termination without calibration (25-Ω setting)	V_{CCIO} = 1.2	±35	±50	±50	%
50-Ω R_S	Internal series termination without calibration (50-Ω setting)	V_{CCIO} = 3.0, 2.5	±30	±40	±40	%
50-Ω R_S	Internal series termination without calibration (50-Ω setting)	V_{CCIO} = 1.8, 1.5	±30	±40	±40	%
50-Ω R_S	Internal series termination without calibration (50-Ω setting)	V_{CCIO} = 1.2	±35	±50	±50	%
100-Ω R_D	Internal differential termination (100-Ω setting)	V_{CCIO} = 2.5	±25	±40	±40	%

Figure 2. Equation for OCT Variation Without Recalibration

$$R_{OCT} = R_{SCAL}\left(1 + \left\langle \frac{dR}{dT} \times \Delta T \right\rangle \pm \left\langle \frac{dR}{dV} \times \Delta V \right\rangle\right)$$

The definitions for the equation are as follows:

- The R_{OCT} value calculated shows the range of OCT resistance with the variation of temperature and V_{CCIO}.
- R_{SCAL} is the OCT resistance value at power-up.
- ΔT is the variation of temperature with respect to the temperature at power up.
- ΔV is the variation of voltage with respect to the V_{CCIO} at power up.
- dR/dT is the percentage change of R_{SCAL} with temperature.
- dR/dV is the percentage change of R_{SCAL} with voltage.

1.1.1.4.6. OCT Variation after Power-Up Calibration

Table 10. OCT Variation after Power-Up Calibration for Arria V Devices

This table lists OCT variation with temperature and voltage after power-up calibration. The OCT variation is valid for a V_{CCIO} range of ±5% and a temperature range of 0°C to 85°C.

Symbol	Description	V_{CCIO} (V)	Value	Unit
dR/dV	OCT variation with voltage without recalibration	3.0	0.100	%/mV
		2.5	0.100	
		1.8	0.100	
		1.5	0.100	
		1.35	0.150	
		1.25	0.150	
		1.2	0.150	
dR/dT	OCT variation with temperature without recalibration	3.0	0.189	%/°C
		2.5	0.208	

continued...

Symbol	Description	V_{CCIO} (V)	Value	Unit
		1.8	0.266	
		1.5	0.273	
		1.35	0.200	
		1.25	0.200	
		1.2	0.317	

1.1.1.4.7. Pin Capacitance

Table 11. Pin Capacitance for Arria V Devices

Symbol	Description	Maximum	Unit
C_{IOTB}	Input capacitance on top/bottom I/O pins	6	pF
C_{IOLR}	Input capacitance on left/right I/O pins	6	pF
C_{OUTFB}	Input capacitance on dual-purpose clock output/feedback pins	6	pF
C_{IOVREF}	Input capacitance on V_{REF} pins	48	pF

1.1.1.4.8. Hot Socketing

Table 12. Hot Socketing Specifications for Arria V Devices

Symbol	Description	Maximum	Unit
$I_{IOPIN\ (DC)}$	DC current per I/O pin	300	µA
$I_{IOPIN\ (AC)}$	AC current per I/O pin	8(10)	mA
$I_{XCVR\text{-}TX\ (DC)}$	DC current per transceiver transmitter (TX) pin	100	mA
$I_{XCVR\text{-}RX\ (DC)}$	DC current per transceiver receiver (RX) pin	50	mA

(10) The I/O ramp rate is 10 ns or more. For ramp rates faster than 10 ns, $|I_{IOPIN}|$ = C dv/dt, in which C is the I/O pin capacitance and dv/dt is the slew rate.

1.1.1.4.9. Internal Weak Pull-Up Resistor

All I/O pins, except configuration, test, and JTAG pins, have an option to enable weak pull-up.

Table 13. Internal Weak Pull-Up Resistor Values for Arria V Devices

Symbol	Description	Condition (V)[11]	Value[12]	Unit
R_{PU}	Value of the I/O pin pull-up resistor before and during configuration, as well as user mode if you have enabled the programmable pull-up resistor option.	V_{CCIO} = 3.3 ±5%	25	kΩ
		V_{CCIO} = 3.0 ±5%	25	kΩ
		V_{CCIO} = 2.5 ±5%	25	kΩ
		V_{CCIO} = 1.8 ±5%	25	kΩ
		V_{CCIO} = 1.5 ±5%	25	kΩ
		V_{CCIO} = 1.35 ±5%	25	kΩ
		V_{CCIO} = 1.25 ±5%	25	kΩ
		V_{CCIO} = 1.2 ±5%	25	kΩ

Related Information

Arria V GT, GX, ST, and SX Device Family Pin Connection Guidelines
Provides more information about the pins that support internal weak pull-up and internal weak pull-down features.

1.1.1.5. I/O Standard Specifications

Tables in this section list the input voltage (V_{IH} and V_{IL}), output voltage (V_{OH} and V_{OL}), and current drive characteristics (I_{OH} and I_{OL}) for various I/O standards supported by Arria V devices.

You must perform timing closure analysis to determine the maximum achievable frequency for general purpose I/O standards.

(11) Pin pull-up resistance values may be lower if an external source drives the pin higher than V_{CCIO}.

(12) Valid with ±10% tolerances to cover changes over PVT.

1.1.1.5.1. Single-Ended I/O Standards

Table 14. Single-Ended I/O Standards for Arria V Devices

I/O Standard	V_{CCIO} (V)			V_{IL} (V)		V_{IH} (V)		V_{OL} (V)	V_{OH} (V)	I_{OL}[13] (mA)	I_{OH}[13] (mA)
	Min	Typ	Max	Min	Max	Min	Max	Max	Min		
3.3-V LVTTL	3.135	3.3	3.465	–0.3	0.8	1.7	3.6	0.45	2.4	4	–4
3.3-V LVCMOS	3.135	3.3	3.465	–0.3	0.8	1.7	3.6	0.2	V_{CCIO} – 0.2	2	–2
3.0-V LVTTL	2.85	3	3.15	–0.3	0.8	1.7	3.6	0.4	2.4	2	–2
3.0-V LVCMOS	2.85	3	3.15	–0.3	0.8	1.7	3.6	0.2	V_{CCIO} – 0.2	0.1	–0.1
3.0-V PCI*	2.85	3	3.15	—	0.3 × V_{CCIO}	0.5 × V_{CCIO}	V_{CCIO} + 0.3	0.1 × V_{CCIO}	0.9 × V_{CCIO}	1.5	–0.5
3.0-V PCI-X	2.85	3	3.15	—	0.35 × V_{CCIO}	0.5 × V_{CCIO}	V_{CCIO} + 0.3	0.1 × V_{CCIO}	0.9 × V_{CCIO}	1.5	–0.5
2.5 V	2.375	2.5	2.625	–0.3	0.7	1.7	3.6	0.4	2	1	–1
1.8 V	1.71	1.8	1.89	–0.3	0.35 × V_{CCIO}	0.65 × V_{CCIO}	V_{CCIO} + 0.3	0.45	V_{CCIO} – 0.45	2	–2
1.5 V	1.425	1.5	1.575	–0.3	0.35 × V_{CCIO}	0.65 × V_{CCIO}	V_{CCIO} + 0.3	0.25 × V_{CCIO}	0.75 × V_{CCIO}	2	–2
1.2 V	1.14	1.2	1.26	–0.3	0.35 × V_{CCIO}	0.65 × V_{CCIO}	V_{CCIO} + 0.3	0.25 × V_{CCIO}	0.75 × V_{CCIO}	2	–2

1.1.1.5.2. Single-Ended SSTL, HSTL, and HSUL I/O Reference Voltage Specifications

Table 15. Single-Ended SSTL, HSTL, and HSUL I/O Reference Voltage Specifications for Arria V Devices

I/O Standard	V_{CCIO} (V)			V_{REF} (V)			V_{TT} (V)		
	Min	Typ	Max	Min	Typ	Max	Min	Typ	Max
SSTL-2 Class I, II	2.375	2.5	2.625	0.49 × V_{CCIO}	0.5 × V_{CCIO}	0.51 × V_{CCIO}	V_{REF} – 0.04	V_{REF}	V_{REF} + 0.04
SSTL-18 Class I, II	1.71	1.8	1.89	0.833	0.9	0.969	V_{REF} – 0.04	V_{REF}	V_{REF} + 0.04

continued...

(13) To meet the I_{OL} and I_{OH} specifications, you must set the current strength settings accordingly. For example, to meet the 3.3-V LVTTL specification (4 mA), you should set the current strength settings to 4 mA. Setting at lower current strength may not meet the I_{OL} and I_{OH} specifications in the datasheet.

I/O Standard	V_{CCIO} (V)			V_{REF} (V)			V_{TT} (V)		
	Min	Typ	Max	Min	Typ	Max	Min	Typ	Max
SSTL-15 Class I, II	1.425	1.5	1.575	0.49 × V_{CCIO}	0.5 × V_{CCIO}	0.51 × V_{CCIO}	0.49 × V_{CCIO}	0.5 × V_{CCIO}	0.51 × V_{CCIO}
SSTL-135 Class I, II	1.283	1.35	1.418	0.49 × V_{CCIO}	0.5 × V_{CCIO}	0.51 × V_{CCIO}	0.49 × V_{CCIO}	0.5 × V_{CCIO}	0.51 × V_{CCIO}
SSTL-125 Class I, II	1.19	1.25	1.26	0.49 × V_{CCIO}	0.5 × V_{CCIO}	0.51 × V_{CCIO}	0.49 × V_{CCIO}	0.5 × V_{CCIO}	0.51 × V_{CCIO}
HSTL-18 Class I, II	1.71	1.8	1.89	0.85	0.9	0.95	—	V_{CCIO}/2	—
HSTL-15 Class I, II	1.425	1.5	1.575	0.68	0.75	0.9	—	V_{CCIO}/2	—
HSTL-12 Class I, II	1.14	1.2	1.26	0.47 × V_{CCIO}	0.5 × V_{CCIO}	0.53 × V_{CCIO}	—	V_{CCIO}/2	—
HSUL-12	1.14	1.2	1.3	0.49 × V_{CCIO}	0.5 × V_{CCIO}	0.51 × V_{CCIO}	—	—	—

1.1.1.5.3. Single-Ended SSTL, HSTL, and HSUL I/O Standards Signal Specifications

Table 16. Single-Ended SSTL, HSTL, and HSUL I/O Standards Signal Specifications for Arria V Devices

I/O Standard	$V_{IL(DC)}$ (V)		$V_{IH(DC)}$ (V)		$V_{IL(AC)}$ (V)	$V_{IH(AC)}$ (V)	V_{OL} (V)	V_{OH} (V)	I_{OL}[14] (mA)	I_{OH}[14] (mA)
	Min	Max	Min	Max	Max	Min	Max	Min		
SSTL-2 Class I	–0.3	V_{REF} – 0.15	V_{REF} + 0.15	V_{CCIO} + 0.3	V_{REF} – 0.31	V_{REF} + 0.31	V_{TT} – 0.608	V_{TT} + 0.608	8.1	–8.1
SSTL-2 Class II	–0.3	V_{REF} – 0.15	V_{REF} + 0.15	V_{CCIO} + 0.3	V_{REF} – 0.31	V_{REF} + 0.31	V_{TT} – 0.81	V_{TT} + 0.81	16.2	–16.2
SSTL-18 Class I	–0.3	V_{REF} – 0.125	V_{REF} + 0.125	V_{CCIO} + 0.3	V_{REF} – 0.25	V_{REF} + 0.25	V_{TT} – 0.603	V_{TT} + 0.603	6.7	–6.7

continued...

(14) To meet the I_{OL} and I_{OH} specifications, you must set the current strength settings accordingly. For example, to meet the SSTL15CI specification (8 mA), you should set the current strength settings to 8 mA. Setting at lower current strength may not meet the I_{OL} and I_{OH} specifications in the datasheet.

I/O Standard	$V_{IL(DC)}$ (V)		$V_{IH(DC)}$ (V)		$V_{IL(AC)}$ (V)	$V_{IH(AC)}$ (V)	V_{OL} (V)	V_{OH} (V)	I_{OL}[14] (mA)	I_{OH}[14] (mA)
	Min	Max	Min	Max	Max	Min	Max	Min		
SSTL-18 Class II	–0.3	V_{REF} – 0.125	V_{REF} + 0.125	V_{CCIO} + 0.3	V_{REF} – 0.25	V_{REF} + 0.25	0.28	V_{CCIO} – 0.28	13.4	–13.4
SSTL-15 Class I	—	V_{REF} – 0.1	V_{REF} + 0.1	—	V_{REF} – 0.175	V_{REF} + 0.175	0.2 × V_{CCIO}	0.8 × V_{CCIO}	8	–8
SSTL-15 Class II	—	V_{REF} – 0.1	V_{REF} + 0.1	—	V_{REF} – 0.175	V_{REF} + 0.175	0.2 × V_{CCIO}	0.8 × V_{CCIO}	16	–16
SSTL-135	—	V_{REF} – 0.09	V_{REF} + 0.09	—	V_{REF} – 0.16	V_{REF} + 0.16	0.2 × V_{CCIO}	0.8 × V_{CCIO}	—	—
SSTL-125	—	V_{REF} – 0.85	V_{REF} + 0.85	—	V_{REF} – 0.15	V_{REF} + 0.15	0.2 × V_{CCIO}	0.8 × V_{CCIO}	—	—
HSTL-18 Class I	—	V_{REF} – 0.1	V_{REF} + 0.1	—	V_{REF} – 0.2	V_{REF} + 0.2	0.4	V_{CCIO} – 0.4	8	–8
HSTL-18 Class II	—	V_{REF} – 0.1	V_{REF} + 0.1	—	V_{REF} – 0.2	V_{REF} + 0.2	0.4	V_{CCIO} – 0.4	16	–16
HSTL-15 Class I	—	V_{REF} – 0.1	V_{REF} + 0.1	—	V_{REF} – 0.2	V_{REF} + 0.2	0.4	V_{CCIO} – 0.4	8	–8
HSTL-15 Class II	—	V_{REF} – 0.1	V_{REF} + 0.1	—	V_{REF} – 0.2	V_{REF} + 0.2	0.4	V_{CCIO} – 0.4	16	–16
HSTL-12 Class I	–0.15	V_{REF} – 0.08	V_{REF} + 0.08	V_{CCIO} + 0.15	V_{REF} – 0.15	V_{REF} + 0.15	0.25 × V_{CCIO}	0.75 × V_{CCIO}	8	–8
HSTL-12 Class II	–0.15	V_{REF} – 0.08	V_{REF} + 0.08	V_{CCIO}+ 0.15	V_{REF} – 0.15	V_{REF} + 0.15	0.25 × V_{CCIO}	0.75 × V_{CCIO}	16	–16
HSUL-12	—	V_{REF} – 0.13	V_{REF} + 0.13	—	V_{REF} – 0.22	V_{REF} + 0.22	0.1 × V_{CCIO}	0.9 × V_{CCIO}	—	—

(14) To meet the I_{OL} and I_{OH} specifications, you must set the current strength settings accordingly. For example, to meet the SSTL15CI specification (8 mA), you should set the current strength settings to 8 mA. Setting at lower current strength may not meet the I_{OL} and I_{OH} specifications in the datasheet.

1.1.1.5.4. Differential SSTL I/O Standards

Table 17. Differential SSTL I/O Standards for Arria V Devices

I/O Standard	V_{CCIO} (V)			$V_{SWING(DC)}$ (V)		$V_{X(AC)}$ (V)			$V_{SWING(AC)}$ (V)	
	Min	Typ	Max	Min	Max	Min	Typ	Max	Min	Max
SSTL-2 Class I, II	2.375	2.5	2.625	0.3	V_{CCIO} + 0.6	$V_{CCIO}/2$ – 0.2	—	$V_{CCIO}/2$ + 0.2	0.62	V_{CCIO} + 0.6
SSTL-18 Class I, II	1.71	1.8	1.89	0.25	V_{CCIO} + 0.6	$V_{CCIO}/2$ – 0.175	—	$V_{CCIO}/2$ + 0.175	0.5	V_{CCIO} + 0.6
SSTL-15 Class I, II	1.425	1.5	1.575	0.2	(15)	$V_{CCIO}/2$ – 0.15	—	$V_{CCIO}/2$ + 0.15	$2(V_{IH(AC)} – V_{REF})$	$2(V_{IL(AC)} – V_{REF})$
SSTL-135	1.283	1.35	1.45	0.18	(15)	$V_{CCIO}/2$ – 0.15	$V_{CCIO}/2$	$V_{CCIO}/2$ + 0.15	$2(V_{IH(AC)} – V_{REF})$	$2(V_{IL(AC)} – V_{REF})$
SSTL-125	1.19	1.25	1.31	0.18	(15)	$V_{CCIO}/2$ – 0.15	$V_{CCIO}/2$	$V_{CCIO}/2$ + 0.15	$2(V_{IH(AC)} – V_{REF})$	$2(V_{IL(AC)} – V_{REF})$

1.1.1.5.5. Differential HSTL and HSUL I/O Standards

Table 18. Differential HSTL and HSUL I/O Standards for Arria V Devices

I/O Standard	V_{CCIO} (V)			$V_{DIF(DC)}$ (V)		$V_{X(AC)}$ (V)			$V_{CM(DC)}$ (V)			$V_{DIF(AC)}$ (V)	
	Min	Typ	Max	Min	Max	Min	Typ	Max	Min	Typ	Max	Min	Max
HSTL-18 Class I, II	1.71	1.8	1.89	0.2	—	0.78	—	1.12	0.78	—	1.12	0.4	—
HSTL-15 Class I, II	1.425	1.5	1.575	0.2	—	0.68	—	0.9	0.68	—	0.9	0.4	—
HSTL-12 Class I, II	1.14	1.2	1.26	0.16	V_{CCIO} + 0.3	—	0.5 × V_{CCIO}	—	0.4 × V_{CCIO}	0.5 × V_{CCIO}	0.6 × V_{CCIO}	0.3	V_{CCIO} + 0.48
HSUL-12	1.14	1.2	1.3	0.26	0.26	0.5 × V_{CCIO} – 0.12	0.5 × V_{CCIO}	0.5 × V_{CCIO} + 0.12	0.4 × V_{CCIO}	0.5 × V_{CCIO}	0.6 × V_{CCIO}	0.44	0.44

(15) The maximum value for $V_{SWING(DC)}$ is not defined. However, each single-ended signal needs to be within the respective single-ended limits ($V_{IH(DC)}$ and $V_{IL(DC)}$).

1.1.1.5.6. Differential I/O Standard Specifications

Table 19. Differential I/O Standard Specifications for Arria V Devices

Differential inputs are powered by V_{CCPD} which requires 2.5 V.

I/O Standard	V_{CCIO} (V)			V_{ID} (mV)[16]			$V_{ICM(DC)}$ (V)			V_{OD} (V)[17]			V_{OCM} (V)[17][18]		
	Min	Typ	Max	Min	Condition	Max	Min	Condition	Max	Min	Typ	Max	Min	Typ	Max
PCML	Transmitter, receiver, and input reference clock pins of high-speed transceivers use the PCML I/O standard. For transmitter, receiver, and reference clock I/O pin specifications, refer to *Transceiver Specifications for Arria V GX and SX Devices* and *Transceiver Specifications for Arria V GT and ST Devices* tables.														
2.5 V LVDS[19]	2.375	2.5	2.625	100	V_{CM} = 1.25 V	—	0.05	$D_{MAX} \leq 1.25$ Gbps	1.80	0.247	—	0.6	1.125	1.25	1.375
						—	1.05	$D_{MAX} > 1.25$ Gbps	1.55						
RSDS (HIO)[20]	2.375	2.5	2.625	100	V_{CM} = 1.25 V	—	0.25	—	1.45	0.1	0.2	0.6	0.5	1.2	1.4

continued...

(16) The minimum V_{ID} value is applicable over the entire common mode range, V_{CM}.

(17) R_L range: $90 \leq R_L \leq 110\ \Omega$.

(18) This applies to default pre-emphasis setting only.

(19) For optimized LVDS receiver performance, the receiver voltage input range must be within 1.0 V to 1.6 V for data rates above 1.25 Gbps and 0 V to 1.85 V for data rates below 1.25 Gbps.

(20) For optimized RSDS receiver performance, the receiver voltage input range must be within 0.25 V to 1.45 V.

I/O Standard	V_{CCIO} (V)			V_{ID} (mV)[16]			$V_{ICM(DC)}$ (V)			V_{OD} (V)[17]			V_{OCM} (V)[17][18]		
	Min	Typ	Max	Min	Condition	Max	Min	Condition	Max	Min	Typ	Max	Min	Typ	Max
Mini-LVDS (HIO)[21]	2.375	2.5	2.625	200	—	600	0.300	—	1.425	0.25	—	0.6	1	1.2	1.4
LVPECL[22]	—	—	—	300	—	—	0.60	D_{MAX} ≤ 700 Mbps	1.80	—	—	—	—	—	—
							1.00	D_{MAX} > 700 Mbps	1.60						

Related Information

- Transceiver Specifications for Arria V GX and SX Devices on page 25
  Provides the specifications for transmitter, receiver, and reference clock I/O pin.
- Transceiver Specifications for Arria V GT and ST Devices on page 30
  Provides the specifications for transmitter, receiver, and reference clock I/O pin.

1.2. Switching Characteristics

This section provides performance characteristics of Arria V core and periphery blocks.

(16) The minimum V_{ID} value is applicable over the entire common mode range, V_{CM}.
(17) R_L range: 90 ≤ R_L ≤ 110 Ω.
(18) This applies to default pre-emphasis setting only.

(21) For optimized Mini-LVDS receiver performance, the receiver voltage input range must be within 0.3 V to 1.425 V.

(22) For optimized LVPECL receiver performance, the receiver voltage input range must be within 0.85 V to 1.75 V for data rates above 700 Mbps and 0.45 V to 1.95 V for data rates below 700 Mbps.

1.2.1. Transceiver Performance Specifications

1.2.1.1. Transceiver Specifications for Arria V GX and SX Devices

Table 20. Reference Clock Specifications for Arria V GX and SX Devices

Symbol/Description	Condition	Transceiver Speed Grade 4			Transceiver Speed Grade 6			Unit
		Min	Typ	Max	Min	Typ	Max	
Supported I/O standards	1.2 V PCML, 1.4 V PCML,1.5 V PCML, 2.5 V PCML, Differential LVPECL(23), HCSL, and LVDS							
Input frequency from REFCLK input pins	—	27	—	710	27	—	710	MHz
Rise time	Measure at ±60 mV of differential signal(24)	—	—	400	—	—	400	ps
Fall time	Measure at ±60 mV of differential signal(24)	—	—	400	—	—	400	ps
Duty cycle	—	45	—	55	45	—	55	%
Peak-to-peak differential input voltage	—	200	—	300(25)/ 2000	200	—	300(25)/ 2000	mV
Spread-spectrum modulating clock frequency	PCIe	30	—	33	30	—	33	kHz
Spread-spectrum downspread	PCIe	—	0 to –0.5%	—	—	0 to –0.5%	—	—
On-chip termination resistors	—	—	100	—	—	100	—	Ω

continued...

(23) Differential LVPECL signal levels must comply to the minimum and maximum peak-to-peak differential input voltage specified in this table.

(24) REFCLK performance requires to meet transmitter REFCLK phase noise specification.

(25) The maximum peak-to peak differential input voltage of 300 mV is allowed for DC coupled link.

Symbol/Description	Condition	Transceiver Speed Grade 4			Transceiver Speed Grade 6			Unit
		Min	Typ	Max	Min	Typ	Max	
V_{ICM} (AC coupled)	—	—	1.1/1.15[26]	—	—	1.1/1.15[26]	—	V
V_{ICM} (DC coupled)	HCSL I/O standard for the PCIe reference clock	250	—	550	250	—	550	mV
Transmitter REFCLK phase noise[27]	10 Hz	—	—	–50	—	—	–50	dBc/Hz
	100 Hz	—	—	–80	—	—	–80	dBc/Hz
	1 KHz	—	—	–110	—	—	–110	dBc/Hz
	10 KHz	—	—	–120	—	—	–120	dBc/Hz
	100 KHz	—	—	–120	—	—	–120	dBc/Hz
	≥1 MHz	—	—	–130	—	—	–130	dBc/Hz
R_{REF}	—	—	2000 ±1%	—	—	2000 ±1%	—	Ω

Table 21. Transceiver Clocks Specifications for Arria V GX and SX Devices

Symbol/Description	Condition	Transceiver Speed Grade 4			Transceiver Speed Grade 6			Unit
		Min	Typ	Max	Min	Typ	Max	
fixedclk clock frequency	PCIe Receiver Detect	—	125	—	—	125	—	MHz
Transceiver Reconfiguration Controller Intel FPGA IP (mgmt_clk_clk) clock frequency	—	75	—	125	75	—	125	MHz

(26) For data rate ≤3.2 Gbps, connect $V_{CCR_GXBL/R}$ to either 1.1-V or 1.15-V power supply. For data rate >3.2 Gbps, connect $V_{CCR_GXBL/R}$ to a 1.15-V power supply. For details, refer to the *Arria V GT, GX, ST, and SX Device Family Pin Connection Guidelines*.

(27) The transmitter REFCLK phase jitter is 30 ps p-p at bit error rate (BER) 10^{-12}.

Table 22. Receiver Specifications for Arria V GX and SX Devices

Symbol/Description	Condition	Transceiver Speed Grade 4			Transceiver Speed Grade 6			Unit
		Min	Typ	Max	Min	Typ	Max	
Supported I/O standards	1.5 V PCML, 2.5 V PCML, LVPECL, and LVDS							
Data rate(28)	—	611	—	6553.6	611	—	3125	Mbps
Absolute V_{MAX} for a receiver pin(29)	—	—	—	1.2	—	—	1.2	V
Absolute V_{MIN} for a receiver pin	—	–0.4	—	—	–0.4	—	—	V
Maximum peak-to-peak differential input voltage V_{ID} (diff p-p) before device configuration	—	—	—	1.6	—	—	1.6	V
Maximum peak-to-peak differential input voltage V_{ID} (diff p-p) after device configuration	—	—	—	2.2	—	—	2.2	V
Minimum differential eye opening at the receiver serial input pins(30)	—	100	—	—	100	—	—	mV
V_{ICM} (AC coupled)	—	—	0.7/0.75/0.8 (31)	—	—	0.7/0.75/0.8 (31)	—	mV
V_{ICM} (DC coupled)	≤ 3.2Gbps(32)	670	700	730	670	700	730	mV
Differential on-chip termination resistors	85-Ω setting	—	85	—	—	85	—	Ω

continued...

(28) To support data rates lower than the minimum specification through oversampling, use the CDR in LTR mode only.

(29) The device cannot tolerate prolonged operation at this absolute maximum.

(30) The differential eye opening specification at the receiver input pins assumes that you have disabled the **Receiver Equalization** feature. If you enable the **Receiver Equalization** feature, the receiver circuitry can tolerate a lower minimum eye opening, depending on the equalization level.

(31) The AC coupled V_{ICM} = 700 mV for Arria V GX and SX in PCIe mode only. The AC coupled V_{ICM} = 750 mV for Arria V GT and ST in PCIe mode only.

(32) For standard protocol compliance, use AC coupling.

Symbol/Description	Condition	Transceiver Speed Grade 4			Transceiver Speed Grade 6			Unit
		Min	Typ	Max	Min	Typ	Max	
	100-Ω setting	—	100	—	—	100	—	Ω
	120-Ω setting	—	120	—	—	120	—	Ω
	150-Ω setting	—	150	—	—	150	—	Ω
t_{LTR}(33)	—	—	—	10	—	—	10	µs
t_{LTD}(34)	—	4	—	—	4	—	—	µs
t_{LTD_manual}(35)	—	4	—	—	4	—	—	µs
$t_{LTR_LTD_manual}$(36)	—	15	—	—	15	—	—	µs
Programmable ppm detector(37)	—	±62.5, 100, 125, 200, 250, 300, 500, and 1000						ppm
Run length	—	—	—	200	—	—	200	UI
Programmable equalization AC and DC gain	AC gain setting = 0 to 3(38) DC gain setting = 0 to 1	Refer to *CTLE Response at Data Rates > 3.25 Gbps across Supported AC Gain and DC Gain for Arria V GX, GT, SX, and ST Devices* and *CTLE Response at Data Rates ≤ 3.25 Gbps across Supported AC Gain and DC Gain for Arria V GX, GT, SX, and ST Devices* diagrams.						dB

(33) t_{LTR} is the time required for the receive CDR to lock to the input reference clock frequency after coming out of reset.

(34) t_{LTD} is time required for the receiver CDR to start recovering valid data after the `rx_is_lockedtodata` signal goes high.

(35) t_{LTD_manual} is the time required for the receiver CDR to start recovering valid data after the `rx_is_lockedtodata` signal goes high when the CDR is functioning in the manual mode.

(36) $t_{LTR_LTD_manual}$ is the time the receiver CDR must be kept in lock to reference (LTR) mode after the `rx_is_lockedtoref` signal goes high when the CDR is functioning in the manual mode.

(37) The rate match FIFO supports only up to ±300 parts per million (ppm).

(38) The Intel Quartus Prime software allows AC gain setting = 3 for design with data rate between 611 Mbps and 1.25 Gbps only.

Table 23. Transmitter Specifications for Arria V GX and SX Devices

Symbol/Description	Condition	Transceiver Speed Grade 4			Transceiver Speed Grade 6			Unit
		Min	Typ	Max	Min	Typ	Max	
Supported I/O standards	1.5 V PCML							
Data rate	—	611	—	6553.6	611	—	3125	Mbps
V_{OCM} (AC coupled)	—	—	650	—	—	650	—	mV
V_{OCM} (DC coupled)	≤ 3.2Gbps(32)	670	700	730	670	700	730	mV
Differential on-chip termination resistors	85-Ω setting	—	85	—	—	85	—	Ω
	100-Ω setting	—	100	—	—	100	—	Ω
	120-Ω setting	—	120	—	—	120	—	Ω
	150-Ω setting	—	150	—	—	150	—	Ω
Intra-differential pair skew	TX V_{CM} = 0.65 V (AC coupled) and slew rate of 15 ps	—	—	15	—	—	15	ps
Intra-transceiver block transmitter channel-to-channel skew	×6 PMA bonded mode	—	—	180	—	—	180	ps
Inter-transceiver block transmitter channel-to-channel skew(39)	×*N* PMA bonded mode	—	—	500	—	—	500	ps

Table 24. CMU PLL Specifications for Arria V GX and SX Devices

Symbol/Description	Transceiver Speed Grade 4		Transceiver Speed Grade 6		Unit
	Min	Max	Min	Max	
Supported data range	611	6553.6	611	3125	Mbps
fPLL supported data range	611	3125	611	3125	Mbps

(39) This specification is only applicable to channels on one side of the device across two transceiver banks.

Table 25. Transceiver-FPGA Fabric Interface Specifications for Arria V GX and SX Devices

Symbol/Description	Transceiver Speed Grade 4 and 6		Unit
	Min	Max	
Interface speed (single-width mode)	25	187.5	MHz
Interface speed (double-width mode)	25	163.84	MHz

Related Information

- CTLE Response at Data Rates > 3.25 Gbps across Supported AC Gain and DC Gain on page 36
- CTLE Response at Data Rates ≤ 3.25 Gbps across Supported AC Gain and DC Gain on page 37
- Arria V GT, GX, ST, and SX Device Family Pin Connection Guidelines
  Provides more information about the power supply connection for different data rates.

1.2.1.2. Transceiver Specifications for Arria V GT and ST Devices

Table 26. Reference Clock Specifications for Arria V GT and ST Devices

Symbol/Description	Condition	Transceiver Speed Grade 3			Unit
		Min	Typ	Max	
Supported I/O standards	1.2 V PCML, 1.4 VPCML, 1.5 V PCML, 2.5 V PCML, Differential LVPECL(40), HCSL, and LVDS				
Input frequency from REFCLK input pins	—	27	—	710	MHz
Rise time	Measure at ±60 mV of differential signal(41)	—	—	400	ps
Fall time	Measure at ±60 mV of differential signal(41)	—	—	400	ps
Duty cycle	—	45	—	55	%

continued...

(40) Differential LVPECL signal levels must comply to the minimum and maximum peak-to-peak differential input voltage specified in this table.

(41) REFCLK performance requires to meet transmitter REFCLK phase noise specification.

Symbol/Description	Condition	Transceiver Speed Grade 3			Unit
		Min	Typ	Max	
Peak-to-peak differential input voltage	—	200	—	300(42)/2000	mV
Spread-spectrum modulating clock frequency	PCIe	30	—	33	kHz
Spread-spectrum downspread	PCIe	—	0 to –0.5%	—	—
On-chip termination resistors	—	—	100	—	Ω
V_{ICM} (AC coupled)	—	—	1.2	—	V
V_{ICM} (DC coupled)	HCSL I/O standard for the PCIe reference clock	250	—	550	mV
Transmitter REFCLK phase noise(43)	10 Hz	—	—	–50	dBc/Hz
	100 Hz	—	—	–80	dBc/Hz
	1 KHz	—	—	–110	dBc/Hz
	10 KHz	—	—	–120	dBc/Hz
	100 KHz	—	—	–120	dBc/Hz
	≥ 1 MHz	—	—	–130	dBc/Hz
R_{REF}	—	—	2000 ±1%	—	Ω

Table 27. Transceiver Clocks Specifications for Arria V GT and ST Devices

Symbol/Description	Condition	Transceiver Speed Grade 3			Unit
		Min	Typ	Max	
fixedclk clock frequency	PCIe Receiver Detect	—	125	—	MHz
Transceiver Reconfiguration Controller Intel FPGA IP (mgmt_clk_clk) clock frequency	—	75	—	125	MHz

(42) The maximum peak-to peak differential input voltage of 300 mV is allowed for DC coupled link.

(43) The transmitter REFCLK phase jitter is 30 ps p-p (5 ps RMS) with bit error rate (BER) 10^{-12}, equivalent to 14 sigma.

Table 28. Receiver Specifications for Arria V GT and ST Devices

Symbol/Description	Condition	Transceiver Speed Grade 3			Unit
		Min	Typ	Max	
Supported I/O Standards	1.5 V PCML, 2.5 V PCML, LVPECL, and LVDS				
Data rate (6-Gbps transceiver)(44)	—	611	—	6553.6	Mbps
Data rate (10-Gbps transceiver)(44)	—	0.611	—	10.3125	Gbps
Absolute V_{MAX} for a receiver pin(45)	—	—	—	1.2	V
Absolute V_{MIN} for a receiver pin	—	–0.4	—	—	V
Maximum peak-to-peak differential input voltage V_{ID} (diff p-p) before device configuration	—	—	—	1.6	V
Maximum peak-to-peak differential input voltage V_{ID} (diff p-p) after device configuration	—	—	—	2.2	V
Minimum differential eye opening at the receiver serial input pins(46)	—	100	—	—	mV
V_{ICM} (AC coupled)	—	—	750(47)/800	—	mV
V_{ICM} (DC coupled)	≤ 3.2Gbps(48)	670	700	730	mV
Differential on-chip termination resistors	85-Ω setting	85			Ω
	100-Ω setting	100			Ω

continued...

(44) To support data rates lower than the minimum specification through oversampling, use the CDR in LTR mode only.

(45) The device cannot tolerate prolonged operation at this absolute maximum.

(46) The differential eye opening specification at the receiver input pins assumes that you have disabled the **Receiver Equalization** feature. If you enable the **Receiver Equalization** feature, the receiver circuitry can tolerate a lower minimum eye opening, depending on the equalization level.

(47) The AC coupled V_{ICM} is 750 mV for PCIe mode only.

(48) For standard protocol compliance, use AC coupling.

Symbol/Description	Condition	Transceiver Speed Grade 3			Unit
		Min	Typ	Max	
	120-Ω setting		120		Ω
	150-Ω setting		150		Ω
t_{LTR}(49)	—	—	—	10	µs
t_{LTD}(50)	—	4	—	—	µs
t_{LTD_manual}(51)	—	4	—	—	µs
$t_{LTR_LTD_manual}$(52)	—	15	—	—	µs
Programmable ppm detector(53)	—	±62.5, 100, 125, 200, 250, 300, 500, and 1000			ppm
Run length	—	—	—	200	UI
Programmable equalization AC and DC gain	AC gain setting = 0 to 3(54) DC gain setting = 0 to 1	Refer to *CTLE Response at Data Rates > 3.25 Gbps across Supported AC Gain and DC Gain for Arria V GX, GT, SX, and ST Devices* and *CTLE Response at Data Rates ≤ 3.25 Gbps across Supported AC Gain and DC Gain for Arria V GX, GT, SX, and ST Devices* diagrams.			

(49) t_{LTR} is the time required for the receive CDR to lock to the input reference clock frequency after coming out of reset.

(50) t_{LTD} is time required for the receiver CDR to start recovering valid data after the `rx_is_lockedtodata` signal goes high.

(51) t_{LTD_manual} is the time required for the receiver CDR to start recovering valid data after the `rx_is_lockedtodata` signal goes high when the CDR is functioning in the manual mode.

(52) $t_{LTR_LTD_manual}$ is the time the receiver CDR must be kept in lock to reference (LTR) mode after the `rx_is_lockedtoref` signal goes high when the CDR is functioning in the manual mode.

(53) The rate match FIFO supports only up to ±300 ppm.

(54) The Intel Quartus Prime software allows AC gain setting = 3 for design with data rate between 611 Mbps and 1.25 Gbps only.

Table 29. Transmitter Specifications for Arria V GT and ST Devices

Symbol/Description	Condition	Transceiver Speed Grade 3			Unit
		Min	Typ	Max	
Supported I/O standards	1.5 V PCML				
Data rate (6-Gbps transceiver)	—	611	—	6553.6	Mbps
Data rate (10-Gbps transceiver)	—	0.611	—	10.3125	Gbps
V_{OCM} (AC coupled)	—	—	650	—	mV
V_{OCM} (DC coupled)	≤ 3.2 Gbps(48)	670	700	730	mV
Differential on-chip termination resistors	85-Ω setting	—	85	—	Ω
	100-Ω setting	—	100	—	Ω
	120-Ω setting	—	120	—	Ω
	150-Ω setting	—	150	—	Ω
Intra-differential pair skew	TX V_{CM} = 0.65 V (AC coupled) and slew rate of 15 ps	—	—	15	ps
Intra-transceiver block transmitter channel-to-channel skew	×6 PMA bonded mode	—	—	180	ps
Inter-transceiver block transmitter channel-to-channel skew(55)	×*N* PMA bonded mode	—	—	500	ps

Table 30. CMU PLL Specifications for Arria V GT and ST Devices

Symbol/Description	Transceiver Speed Grade 3		Unit
	Min	Max	
Supported data range	0.611	10.3125	Gbps
fPLL supported data range	611	3125	Mbps

(55) This specification is only applicable to channels on one side of the device across two transceiver banks.

Table 31. Transceiver-FPGA Fabric Interface Specifications for Arria V GT and ST Devices

Symbol/Description	Transceiver Speed Grade 3		Unit
	Min	Max	
Interface speed (PMA direct mode)	50	153.6(56), 161(57)	MHz
Interface speed (single-width mode)	25	187.5	MHz
Interface speed (double-width mode)	25	163.84	MHz

Related Information

- CTLE Response at Data Rates > 3.25 Gbps across Supported AC Gain and DC Gain on page 36
- CTLE Response at Data Rates ≤ 3.25 Gbps across Supported AC Gain and DC Gain on page 37

(56) The maximum frequency when core transceiver local routing is selected.

(57) The maximum frequency when core transceiver network routing (GCLK, RCLK, or PCLK) is selected.

1.2.1.3. CTLE Response at Data Rates > 3.25 Gbps across Supported AC Gain and DC Gain

Figure 3. Continuous Time-Linear Equalizer (CTLE) Response at Data Rates > 3.25 Gbps across Supported AC Gain and DC Gain for Arria V GX, GT, SX, and ST Devices

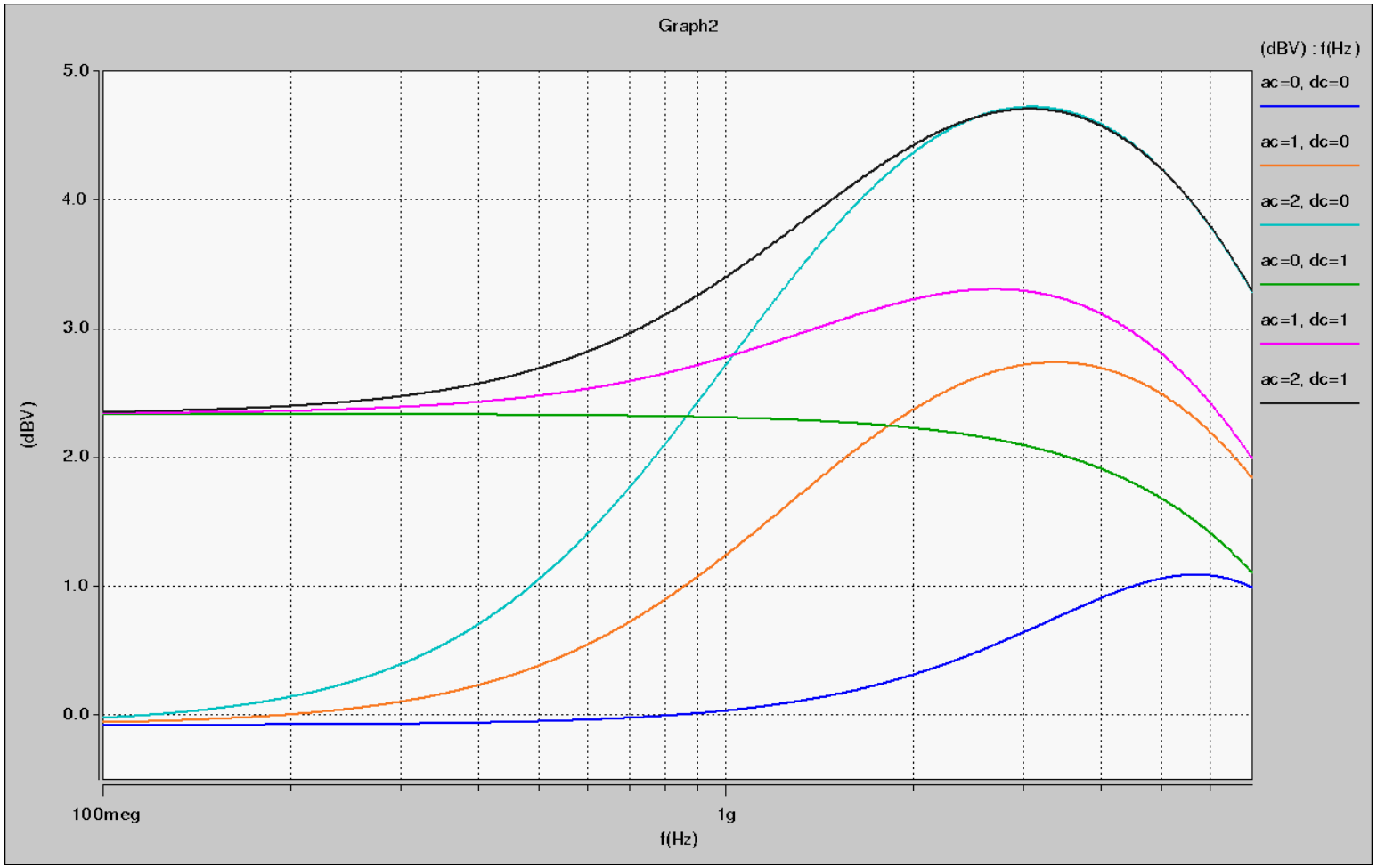

1.2.1.4. CTLE Response at Data Rates ≤ 3.25 Gbps across Supported AC Gain and DC Gain

Figure 4. CTLE Response at Data Rates ≤ 3.25 Gbps across Supported AC Gain and DC Gain for Arria V GX, GT, SX, and ST Devices

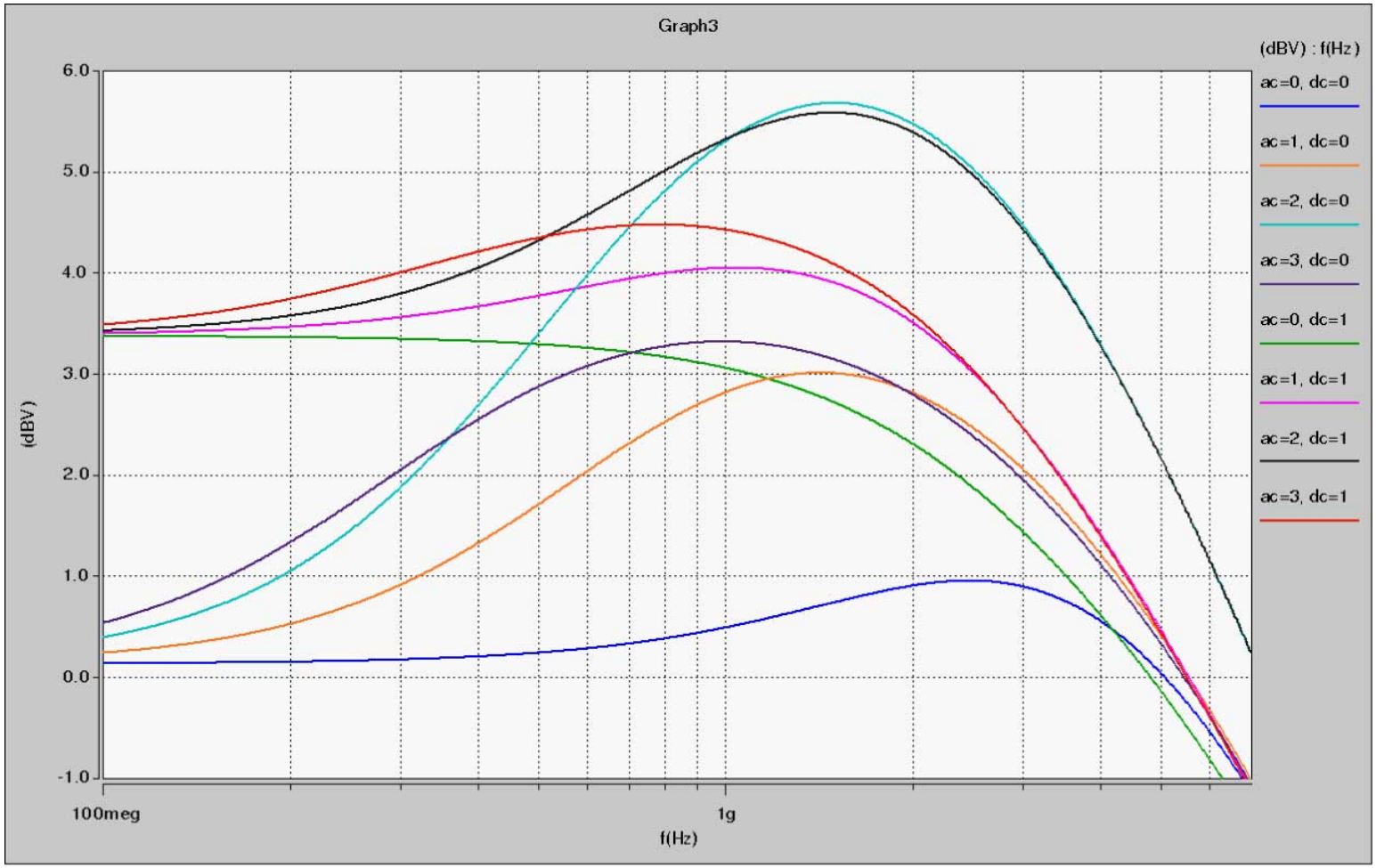

1.2.1.5. Typical TX V_{OD} Setting for Arria V Transceiver Channels with termination of 100 Ω

Table 32. Typical TX V_{OD} Setting for Arria V Transceiver Channels with termination of 100 Ω

Symbol	V_{OD} Setting[58]	V_{OD} Value (mV)	V_{OD} Setting[58]	V_{OD} Value (mV)
V_{OD} differential peak-to-peak typical	6[59]	120	34	680
	7[59]	140	35	700
	8[59]	160	36	720
	9	180	37	740
	10	200	38	760
	11	220	39	780
	12	240	40	800
	13	260	41	820
	14	280	42	840
	15	300	43	860
	16	320	44	880
	17	340	45	900
	18	360	46	920
	19	380	47	940
	20	400	48	960
	21	420	49	980
	22	440	50	1000
	23	460	51	1020
	24	480	52	1040

continued...

(58) Convert these values to their binary equivalent form if you are using the dynamic reconfiguration mode for PMA analog controls.

(59) Only valid for data rates ≤ 5 Gbps.

Symbol	V_{OD} Setting[58]	V_{OD} Value (mV)	V_{OD} Setting[58]	V_{OD} Value (mV)
	25	500	53	1060
	26	520	54	1080
	27	540	55	1100
	28	560	56	1120
	29	580	57	1140
	30	600	58	1160
	31	620	59	1180
	32	640	60	1200
	33	660		

1.2.1.6. Transmitter Pre-Emphasis Levels

The following table lists the simulation data on the transmitter pre-emphasis levels in dB for the first post tap under the following conditions:

- Low-frequency data pattern—five 1s and five 0s
- Data rate—2.5 Gbps

The levels listed are a representation of possible pre-emphasis levels under the specified conditions only and the pre-emphasis levels may change with data pattern and data rate.

Arria V devices only support 1st post tap pre-emphasis with the following conditions:

- The 1st post tap pre-emphasis settings must satisfy $|B| + |C| \leq 60$ where $|B| = V_{OD}$ setting with termination value, $R_{TERM} = 100\ \Omega$ and $|C|$ = 1st post tap pre-emphasis setting.
- $|B| - |C| > 5$ for data rates < 5 Gbps and $|B| - |C| > 8.25$ for data rates > 5 Gbps.
- $(V_{MAX}/V_{MIN} - 1)\% < 600\%$, where $V_{MAX} = |B| + |C|$ and $V_{MIN} = |B| - |C|$.

(58) Convert these values to their binary equivalent form if you are using the dynamic reconfiguration mode for PMA analog controls.

Exception for PCIe Gen2 design: V_{OD} setting = 43 and pre-emphasis setting = 19 are allowed for PCIe Gen2 design with transmit de-emphasis –6dB setting (`pipe_txdeemp` = 1'b0) using Arria V Hard IP for PCI Express Intel FPGA IP and PHY for PCI Express (PIPE) Intel FPGA IP cores.

For example, when V_{OD} = 800 mV, the corresponding V_{OD} value setting is 40. The following conditions show that the 1st post tap pre-emphasis setting = 2 is valid:

- $|B| + |C| \leq 60 \rightarrow 40 + 2 = 42$
- $|B| - |C| > 5 \rightarrow 40 - 2 = 38$
- $(V_{MAX}/V_{MIN} - 1)\% < 600\% \rightarrow (42/38 - 1)\% = 10.52\%$

To predict the pre-emphasis level for your specific data rate and pattern, run simulations using the Arria V HSSI HSPICE models.

Table 33. Transmitter Pre-Emphasis Levels for Arria V Devices

Intel Quartus Prime 1st Post Tap Pre-Emphasis Setting	Intel Quartus Prime V_{OD} Setting							Unit
	10 (200 mV)	20 (400 mV)	30 (600 mV)	35 (700 mV)	40 (800 mV)	45 (900 mV)	50 (1000 mV)	
0	0	0	0	0	0	0	0	dB
1	1.97	0.88	0.43	0.32	0.24	0.19	0.13	dB
2	3.58	1.67	0.95	0.76	0.61	0.5	0.41	dB
3	5.35	2.48	1.49	1.2	1	0.83	0.69	dB
4	7.27	3.31	2	1.63	1.36	1.14	0.96	dB
5	—	4.19	2.55	2.1	1.76	1.49	1.26	dB
6	—	5.08	3.11	2.56	2.17	1.83	1.56	dB
7	—	5.99	3.71	3.06	2.58	2.18	1.87	dB
8	—	6.92	4.22	3.47	2.93	2.48	2.11	dB
9	—	7.92	4.86	4	3.38	2.87	2.46	dB
10	—	9.04	5.46	4.51	3.79	3.23	2.77	dB
11	—	10.2	6.09	5.01	4.23	3.61	—	dB
12	—	11.56	6.74	5.51	4.68	3.97	—	dB

continued...

Intel Quartus Prime 1st Post Tap Pre-Emphasis Setting	Intel Quartus Prime V_{OD} Setting							Unit
	10 (200 mV)	20 (400 mV)	30 (600 mV)	35 (700 mV)	40 (800 mV)	45 (900 mV)	50 (1000 mV)	
13	—	12.9	7.44	6.1	5.12	4.36	—	dB
14	—	14.44	8.12	6.64	5.57	4.76	—	dB
15	—	—	8.87	7.21	6.06	5.14	—	dB
16	—	—	9.56	7.73	6.49	—	—	dB
17	—	—	10.43	8.39	7.02	—	—	dB
18	—	—	11.23	9.03	7.52	—	—	dB
19	—	—	12.18	9.7	8.02	—	—	dB
20	—	—	13.17	10.34	8.59	—	—	dB
21	—	—	14.2	11.1	—	—	—	dB
22	—	—	15.38	11.87	—	—	—	dB
23	—	—	—	12.67	—	—	—	dB
24	—	—	—	13.48	—	—	—	dB
25	—	—	—	14.37	—	—	—	dB
26	—	—	—	—	—	—	—	dB
27	—	—	—	—	—	—	—	dB
28	—	—	—	—	—	—	—	dB
29	—	—	—	—	—	—	—	dB
30	—	—	—	—	—	—	—	dB
31	—	—	—	—	—	—	—	dB

Related Information

SPICE Models for Intel Devices
Provides the Arria V HSSI HSPICE models.

1.2.1.7. Transceiver Compliance Specification

The following table lists the physical medium attachment (PMA) specification compliance of all supported protocol for Arria V GX, GT, SX, and ST devices. For more information about the protocol parameter details and compliance specifications, contact your Intel Sales Representative.

Table 34. Transceiver Compliance Specification for All Supported Protocol for Arria V GX, GT, SX, and ST Devices

Protocol	Sub-protocol	Data Rate (Mbps)
PCIe	PCIe Gen1	2,500
	PCIe Gen2	5,000
	PCIe Cable	2,500
XAUI	XAUI 2135	3,125
Serial RapidIO® (SRIO)	SRIO 1250 SR	1,250
	SRIO 1250 LR	1,250
	SRIO 2500 SR	2,500
	SRIO 2500 LR	2,500
	SRIO 3125 SR	3,125
	SRIO 3125 LR	3,125
	SRIO 5000 SR	5,000
	SRIO 5000 MR	5,000
	SRIO 5000 LR	5,000
	SRIO_6250_SR	6,250
	SRIO_6250_MR	6,250
	SRIO_6250_LR	6,250
Common Public Radio Interface (CPRI)	CPRI E6LV	614.4
	CPRI E6HV	614.4
	CPRI E6LVII	614.4

continued...

Protocol	Sub-protocol	Data Rate (Mbps)
	CPRI E12LV	1,228.8
	CPRI E12HV	1,228.8
	CPRI E12LVII	1,228.8
	CPRI E24LV	2,457.6
	CPRI E24LVII	2,457.6
	CPRI E30LV	3,072
	CPRI E30LVII	3,072
	CPRI E48LVII	4,915.2
	CPRI E60LVII	6,144
	CPRI E96LVIII(60)	9,830.4
Gbps Ethernet (GbE)	GbE 1250	1,250
OBSAI	OBSAI 768	768
	OBSAI 1536	1,536
	OBSAI 3072	3,072
	OBSAI 6144	6,144
Serial digital interface (SDI)	SDI 270 SD	270
	SDI 1485 HD	1,485
	SDI 2970 3G	2,970
SONET	SONET 155	155.52
	SONET 622	622.08
	SONET 2488	2,488.32
Gigabit-capable passive optical network (GPON)	GPON 155	155.52

continued...

(60) You can achieve compliance with TX channel restriction of one HSSI channel per six-channel transceiver bank.

Protocol	Sub-protocol	Data Rate (Mbps)
	GPON 622	622.08
	GPON 1244	1,244.16
	GPON 2488	2,488.32
QSGMII	QSGMII 5000	5,000

1.2.2. Core Performance Specifications

1.2.2.1. Clock Tree Specifications

Table 35. Clock Tree Specifications for Arria V Devices

Parameter	Performance			Unit
	–I3, –C4	–I5, –C5	–C6	
Global clock and Regional clock	625	625	525	MHz
Peripheral clock	450	400	350	MHz

1.2.2.2. PLL Specifications

Table 36. PLL Specifications for Arria V Devices

This table lists the Arria V PLL block specifications. Arria V PLL block does not include HPS PLL.

Symbol	Parameter	Condition	Min	Typ	Max	Unit
f_{IN}	Input clock frequency	–3 speed grade	5	—	800(61)	MHz
		–4 speed grade	5	—	800(61)	MHz
		–5 speed grade	5	—	750(61)	MHz
		–6 speed grade	5	—	625(61)	MHz

continued...

(61) This specification is limited in the Intel Quartus Prime software by the I/O maximum frequency. The maximum I/O frequency is different for each I/O standard.

Symbol	Parameter	Condition	Min	Typ	Max	Unit
f_{INPFD}	Integer input clock frequency to the phase frequency detector (PFD)	—	5	—	325	MHz
f_{FINPFD}	Fractional input clock frequency to the PFD	—	50	—	160	MHz
f_{VCO} (62)	PLL voltage-controlled oscillator (VCO) operating range	–3 speed grade	600	—	1600	MHz
		–4 speed grade	600	—	1600	MHz
		–5 speed grade	600	—	1600	MHz
		–6 speed grade	600	—	1300	MHz
$t_{EINDUTY}$	Input clock or external feedback clock input duty cycle	—	40	—	60	%
f_{OUT}	Output frequency for internal global or regional clock	–3 speed grade	—	—	500 (63)	MHz
		–4 speed grade	—	—	500 (63)	MHz
		–5 speed grade	—	—	500 (63)	MHz
		–6 speed grade	—	—	400 (63)	MHz
f_{OUT_EXT}	Output frequency for external clock output	–3 speed grade	—	—	670 (63)	MHz
		–4 speed grade	—	—	670 (63)	MHz
		–5 speed grade	—	—	622 (63)	MHz
		–6 speed grade	—	—	500 (63)	MHz
$t_{OUTDUTY}$	Duty cycle for external clock output (when set to 50%)	—	45	50	55	%
t_{FCOMP}	External feedback clock compensation time	—	—	—	10	ns
$t_{DYCONFIGCLK}$	Dynamic configuration clock for `mgmt_clk` and `scanclk`	—	—	—	100	MHz

continued...

(62) The VCO frequency reported by the Intel Quartus Prime software takes into consideration the VCO post divider value. Therefore, if the VCO post divider value is 2, the frequency reported can be lower than the f_{VCO} specification.

(63) This specification is limited by the lower of the two: I/O f_{MAX} or F_{OUT} of the PLL.

Symbol	Parameter	Condition	Min	Typ	Max	Unit
t_{LOCK}	Time required to lock from end-of-device configuration or deassertion of `areset`	—	—	—	1	ms
t_{DLOCK}	Time required to lock dynamically (after switchover or reconfiguring any non-post-scale counters/delays)	—	—	—	1	ms
f_{CLBW}	PLL closed-loop bandwidth	Low	—	0.3	—	MHz
		Medium	—	1.5	—	MHz
		High(64)	—	4	—	MHz
t_{PLL_PSERR}	Accuracy of PLL phase shift	—	—	—	±50	ps
t_{ARESET}	Minimum pulse width on the `areset` signal	—	10	—	—	ns
t_{INCCJ}(65)(66)	Input clock cycle-to-cycle jitter	F_{REF} ≥ 100 MHz	—	—	0.15	UI (p-p)
		F_{REF} < 100 MHz	—	—	±750	ps (p-p)
t_{OUTPJ_DC}(67)	Period jitter for dedicated clock output in integer PLL	F_{OUT} ≥ 100 MHz	—	—	175	ps (p-p)
		F_{OUT} < 100 MHz	—	—	17.5	mUI (p-p)

continued...

(64) High bandwidth PLL settings are not supported in external feedback mode.

(65) A high input jitter directly affects the PLL output jitter. To have low PLL output clock jitter, you must provide a clean clock source with jitter < 120 ps.

(66) F_{REF} is f_{IN}/N, specification applies when $N = 1$.

(67) Peak-to-peak jitter with a probability level of 10^{-12} (14 sigma, 99.99999999974404% confidence level). The output jitter specification applies to the intrinsic jitter of the PLL, when an input jitter of 30 ps is applied. The external memory interface clock output jitter specifications use a different measurement method and are available in Memory Output Clock Jitter Specification for Arria V Devices table.

Symbol	Parameter	Condition	Min	Typ	Max	Unit
t_{FOUTPJ_DC}(67)	Period jitter for dedicated clock output in fractional PLL	$F_{OUT} \geq 100$ MHz	—	—	250(68), 175(69)	ps (p-p)
		$F_{OUT} < 100$ MHz	—	—	25(68), 17.5(69)	mUI (p-p)
t_{OUTCCJ_DC}(67)	Cycle-to-cycle jitter for dedicated clock output in integer PLL	$F_{OUT} \geq 100$ MHz	—	—	175	ps (p-p)
		$F_{OUT} < 100$ MHz	—	—	17.5	mUI (p-p)
$t_{FOUTCCJ_DC}$(67)	Cycle-to-cycle jitter for dedicated clock output in fractional PLL	$F_{OUT} \geq 100$ MHz	—	—	250(68), 175(69)	ps (p-p)
		$F_{OUT} < 100$ MHz	—	—	25(68), 17.5(69)	mUI (p-p)
t_{OUTPJ_IO}(67)(70)	Period jitter for clock output on a regular I/O in integer PLL	$F_{OUT} \geq 100$ MHz	—	—	600	ps (p-p)
		$F_{OUT} < 100$ MHz	—	—	60	mUI (p-p)
t_{FOUTPJ_IO}(67)(68)(70)	Period jitter for clock output on a regular I/O in fractional PLL	$F_{OUT} \geq 100$ MHz	—	—	600	ps (p-p)
		$F_{OUT} < 100$ MHz	—	—	60	mUI (p-p)
t_{OUTCCJ_IO}(67)(70)	Cycle-to-cycle jitter for clock output on a regular I/O in integer PLL	$F_{OUT} \geq 100$ MHz	—	—	600	ps (p-p)
		$F_{OUT} < 100$ MHz	—	—	60	mUI (p-p)
$t_{FOUTCCJ_IO}$(67)(68)(70)	Cycle-to-cycle jitter for clock output on a regular I/O in fractional PLL	$F_{OUT} \geq 100$ MHz	—	—	600	ps (p-p)
		$F_{OUT} < 100$ MHz	—	—	60	mUI (p-p)
$t_{CASC_OUTPJ_DC}$(67)(71)	Period jitter for dedicated clock output in cascaded PLLs	$F_{OUT} \geq 100$ MHz	—	—	175	ps (p-p)
		$F_{OUT} < 100$ MHz	—	—	17.5	mUI (p-p)

continued...

(68) This specification only covered fractional PLL for low bandwidth. The f_{VCO} for fractional value range 0.05–0.95 must be ≥ 1000 MHz.

(69) This specification only covered fractional PLL for low bandwidth. The f_{VCO} for fractional value range 0.20–0.80 must be ≥ 1200 MHz.

(70) External memory interface clock output jitter specifications use a different measurement method, which are available in Memory Output Clock Jitter Specification for Arria V Devices table.

(71) The cascaded PLL specification is only applicable with the following conditions:
- Upstream PLL: 0.59 MHz ≤ Upstream PLL BW < 1 MHz
- Downstream PLL: Downstream PLL BW > 2 MHz

Symbol	Parameter	Condition	Min	Typ	Max	Unit
t_{DRIFT}	Frequency drift after PFDENA is disabled for a duration of 100 µs	—	—	—	±10	%
dK_{BIT}	Bit number of Delta Sigma Modulator (DSM)	—	8	24	32	bits
k_{VALUE}	Numerator of fraction	—	128	8388608	2147483648	—
f_{RES}	Resolution of VCO frequency	f_{INPFD} = 100 MHz	390625	5.96	0.023	Hz

Related Information

Memory Output Clock Jitter Specifications on page 57
Provides more information about the external memory interface clock output jitter specifications.

1.2.2.3. DSP Block Performance Specifications

Table 37. DSP Block Performance Specifications for Arria V Devices

Mode		Performance			Unit
		–I3, –C4	–I5, –C5	–C6	
Modes using One DSP Block	Independent 9 × 9 multiplication	370	310	220	MHz
	Independent 18 × 19 multiplication	370	310	220	MHz
	Independent 18 × 25 multiplication	370	310	220	MHz
	Independent 20 × 24 multiplication	370	310	220	MHz
	Independent 27 × 27 multiplication	310	250	200	MHz
	Two 18 × 19 multiplier adder mode	370	310	220	MHz
	18 × 18 multiplier added summed with 36-bit input	370	310	220	MHz
Modes using Two DSP Blocks	Complex 18 × 19 multiplication	370	310	220	MHz

1.2.2.4. Memory Block Performance Specifications

To achieve the maximum memory block performance, use a memory block clock that comes through global clock routing from an on-chip PLL and set to 50% output duty cycle. Use the Intel Quartus Prime software to report timing for the memory block clocking schemes.

When you use the error detection cyclical redundancy check (CRC) feature, there is no degradation in f_{MAX}.

Table 38. Memory Block Performance Specifications for Arria V Devices

Memory	Mode	Resources Used		Performance			Unit
		ALUTs	Memory	–I3, –C4	–I5, –C5	–C6	
MLAB	Single port, all supported widths	0	1	500	450	400	MHz
	Simple dual-port, all supported widths	0	1	500	450	400	MHz
	Simple dual-port with read and write at the same address	0	1	400	350	300	MHz
	ROM, all supported width	—	—	500	450	400	MHz
M10K Block	Single-port, all supported widths	0	1	400	350	285	MHz
	Simple dual-port, all supported widths	0	1	400	350	285	MHz
	Simple dual-port with the read-during-write option set to **Old Data**, all supported widths	0	1	315	275	240	MHz
	True dual port, all supported widths	0	1	400	350	285	MHz
	ROM, all supported widths	0	1	400	350	285	MHz

1.2.2.5. Internal Temperature Sensing Diode Specifications

Table 39. Internal Temperature Sensing Diode Specifications for Arria V Devices

Temperature Range	Accuracy	Offset Calibrated Option	Sampling Rate	Conversion Time[72]	Resolution	Minimum Resolution with no Missing Codes
–40 to 100°C	±8°C	No	1 MHz	< 100 ms	8 bits	8 bits

Related Information

Intel FPGA Temperature Sensor IP Core User Guide
Provides more information about the temperature sensing operation.

[72] For more details about the temperature sensing operations, refer to the *Intel FPGA Temperature Sensor IP Core User Guide*.

1.2.3. Periphery Performance

This section describes the periphery performance, high-speed I/O, and external memory interface.

Actual achievable frequency depends on design and system specific factors. Ensure proper timing closure in your design and perform HSPICE/IBIS simulations based on your specific design and system setup to determine the maximum achievable frequency in your system.

1.2.3.1. High-Speed I/O Specifications

Table 40. High-Speed I/O Specifications for Arria V Devices

When J = 3 to 10, use the serializer/deserializer (SERDES) block. When J = 1 or 2, bypass the SERDES block.

For LVDS applications, you must use the PLLs in integer PLL mode.

The Arria V devices support the following output standards using true LVDS output buffer types on all I/O banks.

- True RSDS output standard with data rates of up to 360 Mbps
- True mini-LVDS output standard with data rates of up to 400 Mbps

Symbol	Condition	–I3, –C4			–I5, –C5			–C6			Unit
		Min	Typ	Max	Min	Typ	Max	Min	Typ	Max	
f_{HSCLK_in} (input clock frequency) True Differential I/O Standards	Clock boost factor W = 1 to 40[73]	5	—	800	5	—	750	5	—	625	MHz
f_{HSCLK_in} (input clock frequency) Single-Ended I/O Standards[74]	Clock boost factor W = 1 to 40[73]	5	—	625	5	—	625	5	—	500	MHz
f_{HSCLK_in} (input clock frequency) Single-Ended I/O Standards[75]	Clock boost factor W = 1 to 40[73]	5	—	420	5	—	420	5	—	420	MHz

continued...

(73) Clock boost factor (W) is the ratio between the input data rate and the input clock rate.

(74) This applies to DPA and soft-CDR modes only.

(75) This applies to non-DPA mode only.

Symbol		Condition	–I3, –C4			–I5, –C5			–C6			Unit
			Min	Typ	Max	Min	Typ	Max	Min	Typ	Max	
f_{HSCLK_OUT} (output clock frequency)		—	5	—	625(76)	5	—	625(76)	5	—	500(76)	MHz
Transmitter	True Differential I/O Standards - f_{HSDR} (data rate)	SERDES factor J =3 to 10(77)	(78)	—	1250	(78)	—	1250	(78)	—	1050	Mbps
		SERDES factor J ≥ 8(77) (79), LVDS TX with RX DPA	(78)	—	1600	(78)	—	1500	(78)	—	1250	Mbps
		SERDES factor J = 1 to 2, Uses DDR Registers	(78)	—	(80)	(78)	—	(80)	(78)	—	(80)	Mbps
	Emulated Differential I/O Standards with Three External Output Resistor Network - f_{HSDR} (data rate) (81)	SERDES factor J = 4 to 10(82)	(78)	—	945	(78)	—	945	(78)	—	945	Mbps

continued...

(76) This is achieved by using the LVDS clock network.

(77) The F_{max} specification is based on the fast clock used for serial data. The interface F_{max} is also dependent on the parallel clock domain which is design dependent and requires timing analysis.

(78) The minimum specification depends on the clock source (for example, the PLL and clock pin) and the clock routing resource (global, regional, or local) that you use. The I/O differential buffer and input register do not have a minimum toggle rate.

(79) The V_{CC} and V_{CCP} must be on a separate power layer and a maximum load of 5 pF for chip-to-chip interface.

(80) The maximum ideal data rate is the SERDES factor (J) x the PLL maximum output frequency (f_{OUT}), provided you can close the design timing and the signal integrity simulation is clean.

(81) You must calculate the leftover timing margin in the receiver by performing link timing closure analysis. You must consider the board skew margin, transmitter channel-to-channel skew, and receiver sampling margin to determine the leftover timing margin.

(82) When using True LVDS RX channels for emulated LVDS TX channel, only serialization factors 1 and 2 are supported.

Symbol		Condition	–I3, –C4			–I5, –C5			–C6			Unit
			Min	Typ	Max	Min	Typ	Max	Min	Typ	Max	
	Emulated Differential I/O Standards with One External Output Resistor Network - f_{HSDR} (data rate)(81)	SERDES factor J = 4 to 10(82)	(78)	—	200	(78)	—	200	(78)	—	200	Mbps
	$t_{x\ Jitter}$ -True Differential I/O Standards	Total Jitter for Data Rate 600 Mbps – 1.25 Gbps	—	—	160	—	—	160	—	—	160	ps
		Total Jitter for Data Rate < 600 Mbps	—	—	0.1	—	—	0.1	—	—	0.1	UI
	$t_{x\ Jitter}$ -Emulated Differential I/O Standards with Three External Output Resistor Network	Total Jitter for Data Rate 600 Mbps – 1.25 Gbps	—	—	260	—	—	300	—	—	350	ps
		Total Jitter for Data Rate < 600 Mbps	—	—	0.16	—	—	0.18	—	—	0.21	UI
	$t_{x\ Jitter}$ -Emulated Differential I/O Standards with One External Output Resistor Network	—	—	—	0.15	—	—	0.15	—	—	0.15	UI
	t_{DUTY}	TX output clock duty cycle for both True and Emulated Differential I/O Standards	45	50	55	45	50	55	45	50	55	%
	t_{RISE} and t_{FALL}	True Differential I/O Standards(83)	—	—	160	—	—	180	—	—	200	ps
		Emulated Differential I/O Standards with Three External Output Resistor Network	—	—	250	—	—	250	—	—	300	ps
		Emulated Differential I/O Standards with One External Output Resistor Network	—	—	500	—	—	500	—	—	500	ps

continued...

(83) This applies to default pre-emphasis and V_{OD} settings only.

Symbol		Condition	–I3, –C4			–I5, –C5			–C6			Unit
			Min	Typ	Max	Min	Typ	Max	Min	Typ	Max	
	TCCS	True Differential I/O Standards	—	—	150	—	—	150	—	—	150	ps
		Emulated Differential I/O Standards	—	—	300	—	—	300	—	—	300	ps
Receiver	True Differential I/O Standards - $f_{HSDRDPA}$ (data rate)	SERDES factor J =3 to 10(77)	150	—	1250	150	—	1250	150	—	1050	Mbps
		SERDES factor J ≥ 8 with DPA(77)(79)	150	—	1600	150	—	1500	150	—	1250	Mbps
	f_{HSDR} (data rate)	SERDES factor J = 3 to 10	(78)	—	(84)	(78)	—	(84)	(78)	—	(84)	Mbps
		SERDES factor J = 1 to 2, uses DDR registers	(78)	—	(80)	(78)	—	(80)	(78)	—	(80)	Mbps
DPA Mode	DPA run length	—	—	—	10000	—	—	10000	—	—	10000	UI
Soft-CDR Mode	Soft-CDR ppm tolerance	—	—	—	300	—	—	300	—	—	300	±ppm
Non-DPA Mode	Sampling Window	—	—	—	300	—	—	300	—	—	300	ps

(84) You can estimate the achievable maximum data rate for non-DPA mode by performing link timing closure analysis. You must consider the board skew margin, transmitter delay margin, and receiver sampling margin to determine the maximum data rate supported.

1.2.3.2. DPA Lock Time Specifications

Figure 5. Dynamic Phase Alignment (DPA) Lock Time Specifications with DPA PLL Calibration Enabled

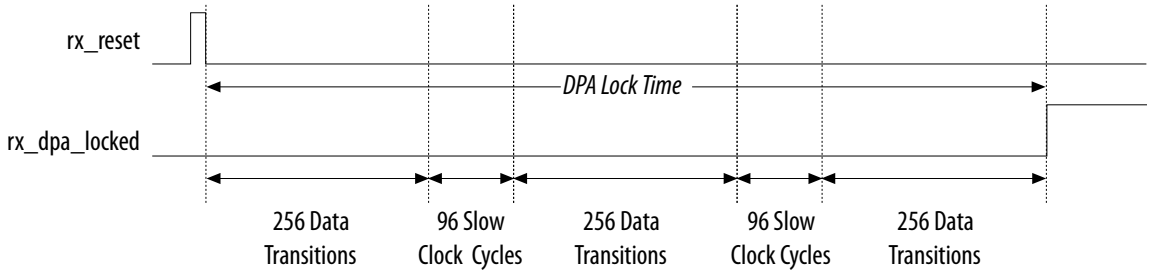

Table 41. DPA Lock Time Specifications for Arria V Devices

The specifications are applicable to both commercial and industrial grades. The DPA lock time is for one channel. One data transition is defined as a 0-to-1 or 1-to-0 transition.

Standard	Training Pattern	Number of Data Transitions in One Repetition of the Training Pattern	Number of Repetitions per 256 Data Transitions(85)	Maximum Data Transition
SPI-4	00000000001111111111	2	128	640
Parallel Rapid I/O	00001111	2	128	640
	10010000	4	64	640
Miscellaneous	10101010	8	32	640
	01010101	8	32	640

(85) This is the number of repetitions for the stated training pattern to achieve the 256 data transitions.

1.2.3.3. LVDS Soft-CDR/DPA Sinusoidal Jitter Tolerance Specifications

Figure 6. LVDS Soft-Clock Data Recovery (CDR)/DPA Sinusoidal Jitter Tolerance Specification for a Data Rate Equal to 1.25 Gbps

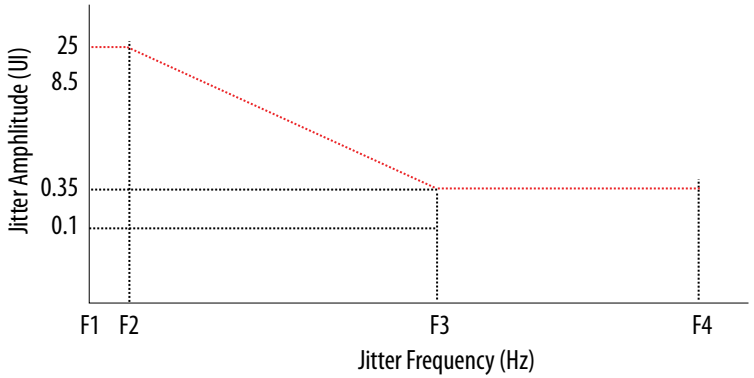

Table 42. LVDS Soft-CDR/DPA Sinusoidal Jitter Mask Values for a Data Rate Equal to 1.25 Gbps

Jitter Frequency (Hz)		Sinusoidal Jitter (UI)
F1	10,000	25.000
F2	17,565	25.000
F3	1,493,000	0.350
F4	50,000,000	0.350

Figure 7. LVDS Soft-CDR/DPA Sinusoidal Jitter Tolerance Specification for a Data Rate Less than 1.25 Gbps

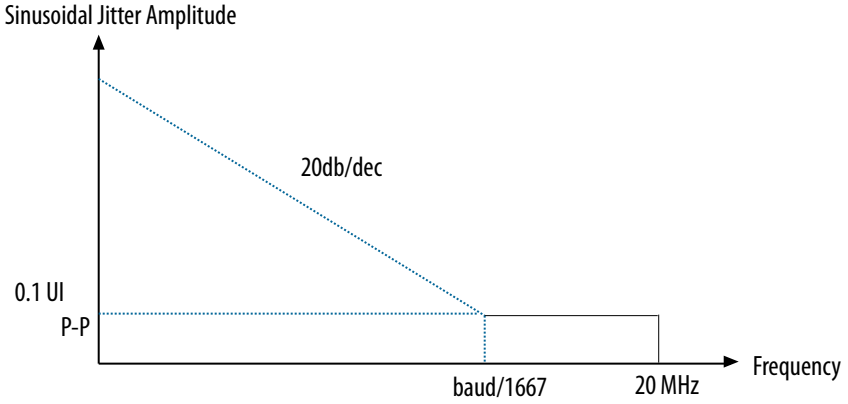

1.2.3.4. DLL Frequency Range Specifications

Table 43. DLL Frequency Range Specifications for Arria V Devices

Parameter	–I3, –C4	–I5, –C5	–C6	Unit
DLL operating frequency range	200 – 667	200 – 667	200 – 667	MHz

1.2.3.5. DQS Logic Block Specifications

Table 44. DQS Phase Shift Error Specifications for DLL-Delayed Clock (t_{DQS_PSERR}) for Arria V Devices

This error specification is the absolute maximum and minimum error.

Number of DQS Delay Buffer	–I3, –C4	–I5, –C5	–C6	Unit
2	40	80	80	ps

1.2.3.6. Memory Output Clock Jitter Specifications

Table 45. Memory Output Clock Jitter Specifications for Arria V Devices

The memory output clock jitter measurements are for 200 consecutive clock cycles, as specified in the JEDEC DDR2/DDR3 SDRAM standard.

The memory output clock jitter is applicable when an input jitter of 30 ps (p-p) is applied with bit error rate (BER) 10^{-12}, equivalent to 14 sigma.

Intel recommends using the UniPHY IP cores with PHYCLK connections for better jitter performance.

Parameter	Clock Network	Symbol	–I3, –C4		–I5, –C5		–C6		Unit
			Min	Max	Min	Max	Min	Max	
Clock period jitter	PHYCLK	$t_{JIT(per)}$	–41	41	–50	50	–55	55	ps
Cycle-to-cycle period jitter	PHYCLK	$t_{JIT(cc)}$	63		90		94		ps

1.2.3.7. OCT Calibration Block Specifications

Table 46. OCT Calibration Block Specifications for Arria V Devices

Symbol	Description	Min	Typ	Max	Unit
OCTUSRCLK	Clock required by OCT calibration blocks	—	—	20	MHz
T_{OCTCAL}	Number of OCTUSRCLK clock cycles required for R_S OCT/R_T OCT calibration	—	1000	—	Cycles
$T_{OCTSHIFT}$	Number of OCTUSRCLK clock cycles required for OCT code to shift out	—	32	—	Cycles
T_{RS_RT}	Time required between the dyn_term_ctrl and oe signal transitions in a bidirectional I/O buffer to dynamically switch between R_S OCT and R_T OCT	—	2.5	—	ns

Figure 8. Timing Diagram for oe and dyn_term_ctrl Signals

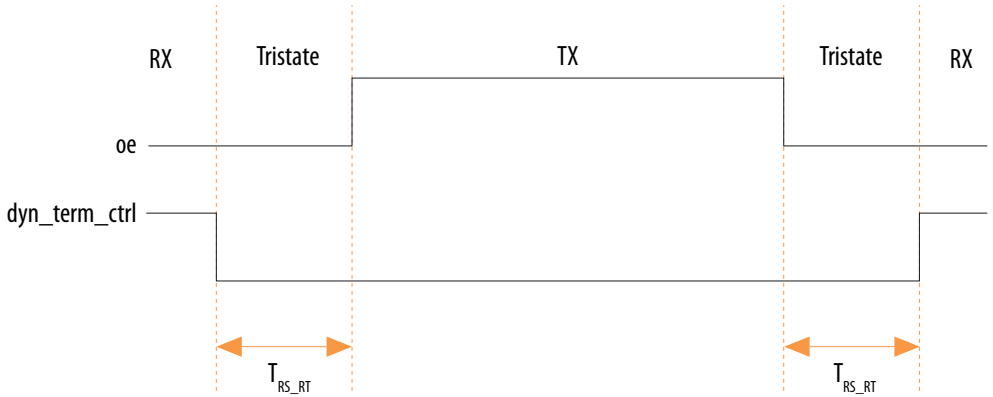

1.2.3.8. Duty Cycle Distortion (DCD) Specifications

Table 47. Worst-Case DCD on Arria V I/O Pins

The output DCD cycle only applies to the I/O buffer. It does not cover the system DCD.

Symbol	–I3, –C4		–C5, –I5		–C6		Unit
	Min	Max	Min	Max	Min	Max	
Output Duty Cycle	45	55	45	55	45	55	%

1.2.4. HPS Specifications

This section provides HPS specifications and timing for Arria V devices.

For HPS reset, the minimum reset pulse widths for the HPS cold and warm reset signals (HPS_nRST and HPS_nPOR) are six clock cycles of HPS_CLK1.

1.2.4.1. HPS Clock Performance

Table 48. HPS Clock Performance for Arria V Devices

Symbol/Description	–I3	–C4	–C5, –I5	–C6	Unit
mpu_base_clk (microprocessor unit clock)	1050	925	800	700	MHz
main_base_clk (L3/L4 interconnect clock)	400	400	400	350	MHz
h2f_user0_clk	100	100	100	100	MHz
h2f_user1_clk	100	100	100	100	MHz
h2f_user2_clk	200	200	200	160	MHz

1.2.4.2. HPS PLL Specifications

1.2.4.2.1. HPS PLL VCO Frequency Range

Table 49. HPS PLL VCO Frequency Range for Arria V Devices

Description	Speed Grade	Minimum	Maximum	Unit
VCO range	–C5, –I5, –C6	320	1,600	MHz
	–C4	320	1,850	MHz
	–I3	320	2,100	MHz

1.2.4.2.2. HPS PLL Input Clock Range

The HPS PLL input clock range is 10 – 50 MHz. This clock range applies to both HPS_CLK1 and HPS_CLK2 inputs.

Related Information

Clock Select, Booting and Configuration chapter
Provides more information about the clock range for different values of clock select (CSEL).

1.2.4.2.3. HPS PLL Input Jitter

Use the following equation to determine the maximum input jitter (peak-to-peak) the HPS PLLs can tolerate. The divide value (N) is the value programmed into the denominator field of the VCO register for each PLL. The PLL input reference clock is divided by this value. The range of the denominator is 1 to 64.

Maximum input jitter = Input clock period × Divide value (N) × 0.02

Table 50. Examples of Maximum Input Jitter

Input Reference Clock Period	Divide Value (N)	Maximum Jitter	Unit
40 ns	1	0.8	ns
40 ns	2	1.6	ns
40 ns	4	3.2	ns

1.2.4.3. Quad SPI Flash Timing Characteristics

Table 51. Quad Serial Peripheral Interface (SPI) Flash Timing Requirements for Arria V Devices

Symbol	Description	Min	Typ	Max	Unit
F_{clk}	SCLK_OUT clock frequency (External clock)	—	—	108	MHz
T_{qspi_clk}	QSPI_CLK clock period (Internal reference clock)	2.32	—	—	ns
$T_{dutycycle}$	SCLK_OUT duty cycle	45	—	55	%
$T_{dssfrst}$	Output delay QSPI_SS valid before first clock edge	—	1/2 cycle of SCLK_OUT	—	ns
T_{dsslst}	Output delay QSPI_SS valid after last clock edge	–1	—	1	ns

continued...

Symbol	Description	Min	Typ	Max	Unit
T_{dio}	I/O data output delay	–1	—	1	ns
T_{din_start}	Input data valid start	—	—	$(2 + R_{delay}) \times T_{qspi_clk} - 7.52$ (86)	ns
T_{din_end}	Input data valid end	$(2 + R_{delay}) \times T_{qspi_clk} - 1.21$ (86)	—	—	ns

Figure 9. Quad SPI Flash Timing Diagram

This timing diagram illustrates clock polarity mode 0 and clock phase mode 0.

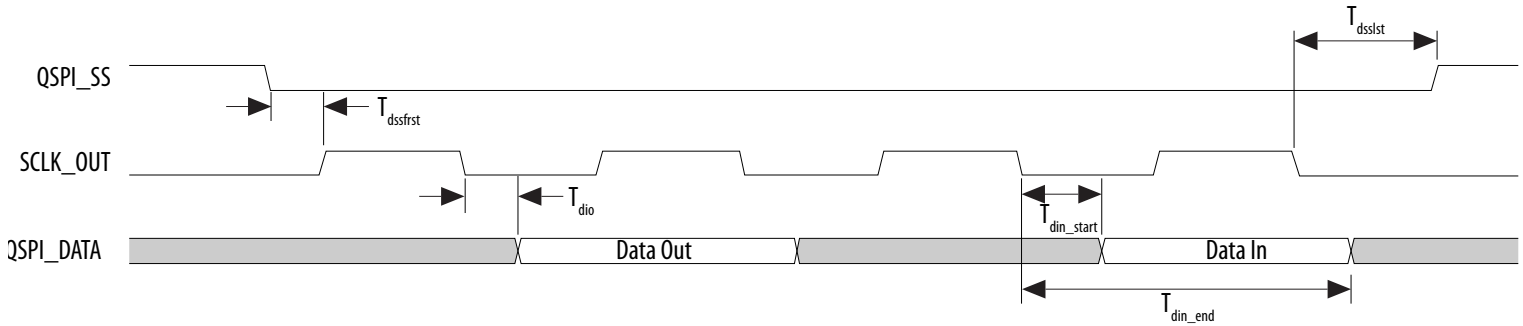

Related Information

Quad SPI Flash Controller Chapter, Arria V Hard Processor System Technical Reference Manual
Provides more information about R_{delay}.

(86) R_{delay} is set by programming the register `qspiregs.rddatacap`. For the SoC EDS software version 13.1 and later, Intel provides automatic Quad SPI calibration in the preloader. For more information about R_{delay}, refer to the *Quad SPI Flash Controller* chapter in the *Arria V Hard Processor System Technical Reference Manual*.

1.2.4.4. SPI Timing Characteristics

Table 52. SPI Master Timing Requirements for Arria V Devices

The setup and hold times can be used for Texas Instruments SSP mode and National Semiconductor Microwire mode.

Symbol	Description	Min	Max	Unit
T_{clk}	CLK clock period	16.67	—	ns
T_{su}	SPI Master-in slave-out (MISO) setup time	8.35 (87)	—	ns
T_{h}	SPI MISO hold time	1	—	ns
$T_{dutycycle}$	SPI_CLK duty cycle	45	55	%
$T_{dssfrst}$	Output delay SPI_SS valid before first clock edge	8	—	ns
T_{dsslst}	Output delay SPI_SS valid after last clock edge	8	—	ns
T_{dio}	Master-out slave-in (MOSI) output delay	–1	1	ns

(87) This value is based on `rx_sample_dly` = 1 and `spi_m_clk` = 120 MHz. `spi_m_clk` is the internal clock that is used by SPI Master to derive it's `SCLK_OUT`. These timings are based on `rx_sample_dly` of 1. This delay can be adjusted as needed to accommodate slower response times from the slave. Note that a delay of 0 is not allowed. The setup time can be used as a reference starting point. It is very crucial to do a calibration to get the correct `rx_sample_dly` value because each SPI slave device may have different output delay and each application board may have different path delay. For more information about `rx_sample_delay`, refer to the *SPI Controller* chapter in the *Hard Processor System Technical Reference Manual*.

Figure 10. SPI Master Timing Diagram

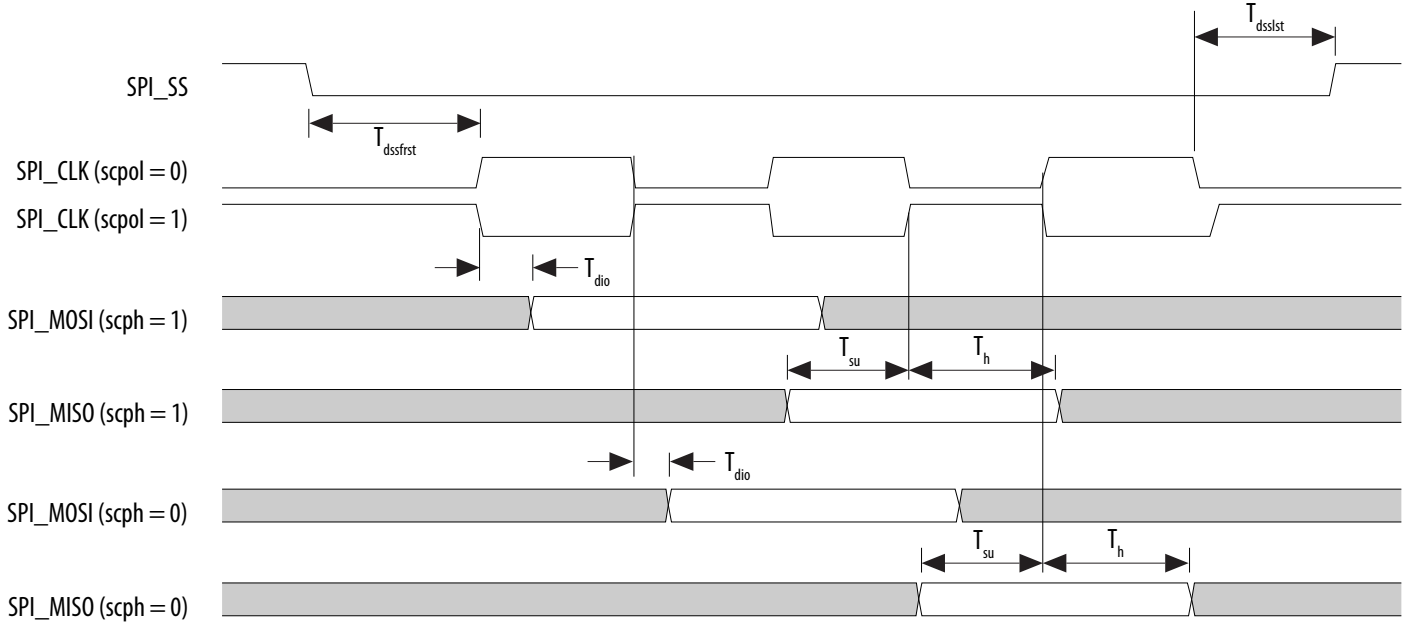

Table 53. SPI Slave Timing Requirements for Arria V Devices

The setup and hold times can be used for Texas Instruments SSP mode and National Semiconductor Microwire mode.

Symbol	Description	Min	Max	Unit
T_{clk}	CLK clock period	20	—	ns
T_s	MOSI Setup time	5	—	ns
T_h	MOSI Hold time	5	—	ns
T_{suss}	Setup time SPI_SS valid before first clock edge	8	—	ns
T_{hss}	Hold time SPI_SS valid after last clock edge	8	—	ns
T_d	MISO output delay	—	6	ns

Figure 11. SPI Slave Timing Diagram

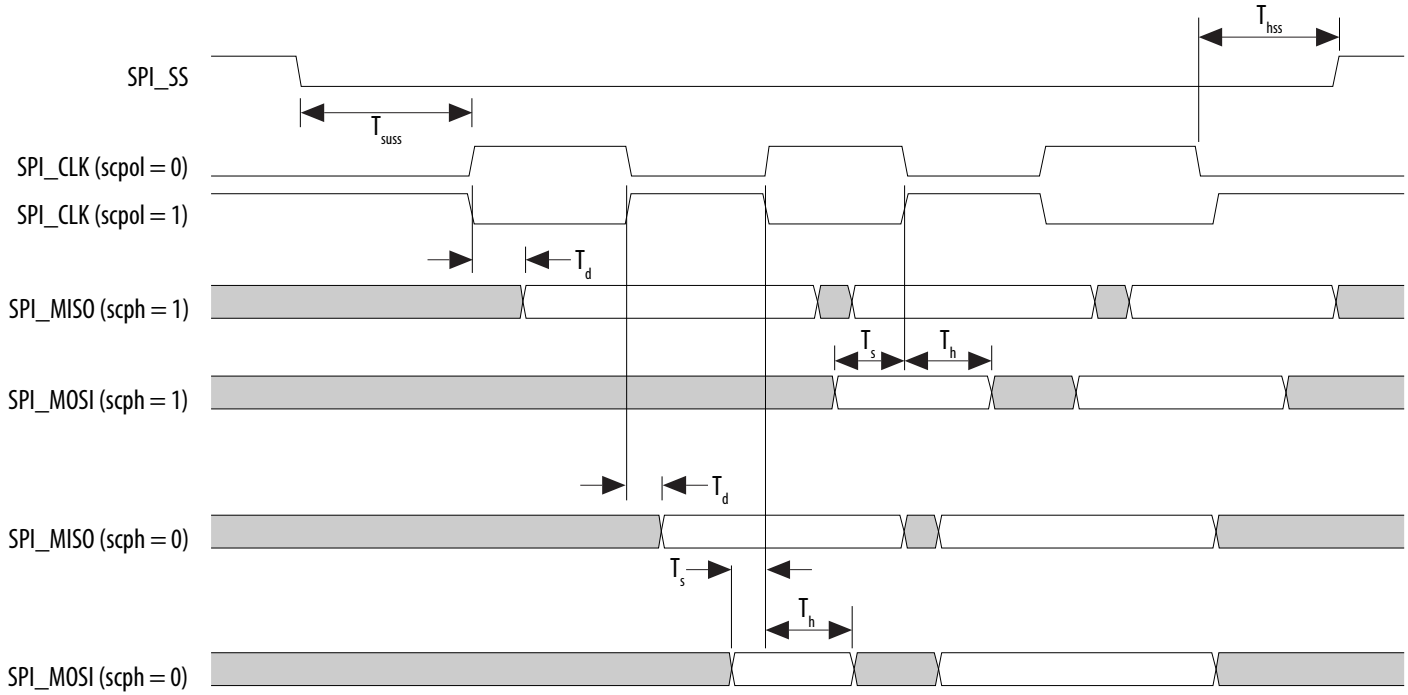

Related Information

SPI Controller, Arria V Hard Processor System Technical Reference Manual
Provides more information about `rx_sample_delay`.

1.2.4.5. SD/MMC Timing Characteristics

Table 54. Secure Digital (SD)/MultiMediaCard (MMC) Timing Requirements for Arria V Devices

After power up or cold reset, the Boot ROM uses `drvsel` = 3 and `smplsel` = 0 to execute the code. At the same time, the SD/MMC controller enters the Identification Phase followed by the Data Phase. During this time, the value of interface output clock `SDMMC_CLK_OUT` changes from a maximum of 400 kHz (Identification Phase) up to a maximum of 12.5 MHz (Data Phase), depending on the internal reference clock `SDMMC_CLK` and the `CSEL` setting. The value of `SDMMC_CLK` is based on the external oscillator frequency and has a maximum value of 50 MHz.

After the Boot ROM code exits and control is passed to the preloader, software can adjust the value of `drvsel` and `smplsel` via the system manager. `drvsel` can be set from 1 to 7 and `smplsel` can be set from 0 to 7. While the preloader is executing, the values for `SDMMC_CLK` and `SDMMC_CLK_OUT` increase to a maximum of 200 MHz and 50 MHz respectively.

Symbol	Description	Min	Max	Unit
T_{sdmmc_clk} (internal reference clock)	SDMMC_CLK clock period (Identification mode)	20	—	ns
	SDMMC_CLK clock period (Default speed mode)	5	—	ns
	SDMMC_CLK clock period (High speed mode)	5	—	ns
$T_{sdmmc_clk_out}$ (interface output clock)	SDMMC_CLK_OUT clock period (Identification mode)	2500	—	ns
	SDMMC_CLK_OUT clock period (Default speed mode)	40	—	ns
	SDMMC_CLK_OUT clock period (High speed mode)	20	—	ns
$T_{dutycycle}$	SDMMC_CLK_OUT duty cycle	45	55	%
T_d	SDMMC_CMD/SDMMC_D output delay	(T_{sdmmc_clk} × `drvsel`)/2 − 1.23 (88)	(T_{sdmmc_clk} × `drvsel`)/2 + 1.69 (88)	ns
T_{su}	Input setup time	1.05 − (T_{sdmmc_clk} × `smplsel`)/2 (89)	—	ns
T_h	Input hold time	(T_{sdmmc_clk} × `smplsel`)/2 (89)	—	ns

(88) `drvsel` is the drive clock phase shift select value.

(89) `smplsel` is the sample clock phase shift select value.

Figure 12. SD/MMC Timing Diagram

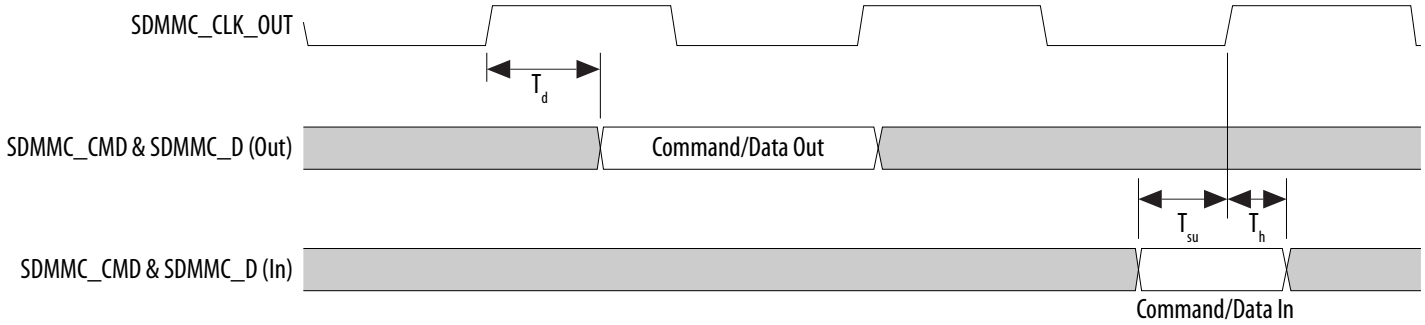

Related Information

Booting and Configuration Chapter, Arria V Hard Processor System Technical Reference Manual
Provides more information about CSEL pin settings in the *SD/MMC Controller CSEL Pin Settings* table.

1.2.4.6. USB Timing Characteristics

PHYs that support LPM mode may not function properly with the USB controller due to a timing issue. It is recommended that designers use the MicroChip USB3300 PHY device that has been proven to be successful on the development board.

Table 55. USB Timing Requirements for Arria V Devices

Symbol	Description	Min	Typ	Max	Unit
T_{clk}	USB CLK clock period	—	16.67	—	ns
T_d	CLK to USB_STP/USB_DATA[7:0] output delay	4.4	—	11	ns
T_{su}	Setup time for USB_DIR/USB_NXT/USB_DATA[7:0]	2	—	—	ns
T_h	Hold time for USB_DIR/USB_NXT/USB_DATA[7:0]	1	—	—	ns

Figure 13. USB Timing Diagram

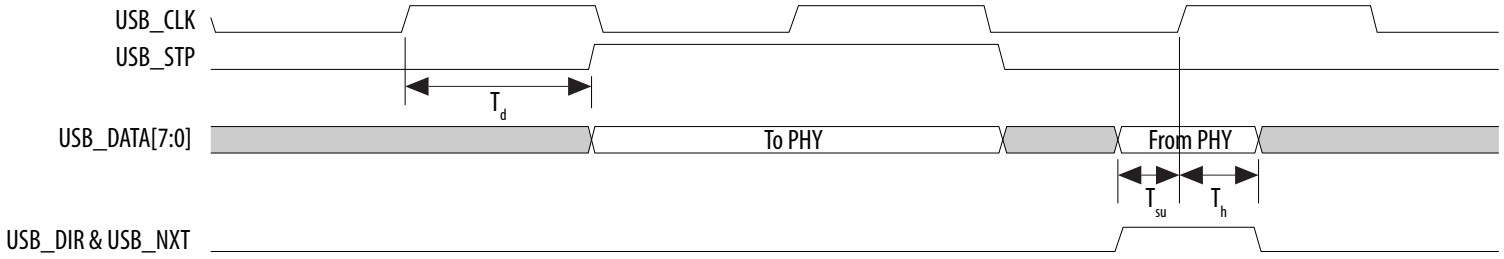

1.2.4.7. Ethernet Media Access Controller (EMAC) Timing Characteristics

Table 56. Reduced Gigabit Media Independent Interface (RGMII) TX Timing Requirements for Arria V Devices

Symbol	Description	Min	Typ	Max	Unit
T_{clk} (1000Base-T)	TX_CLK clock period	—	8	—	ns
T_{clk} (100Base-T)	TX_CLK clock period	—	40	—	ns
T_{clk} (10Base-T)	TX_CLK clock period	—	400	—	ns
$T_{dutycycle}$	TX_CLK duty cycle	45	—	55	%
T_d	TX_CLK to TXD/TX_CTL output data delay	–0.85	—	0.15	ns

Figure 14. RGMII TX Timing Diagram

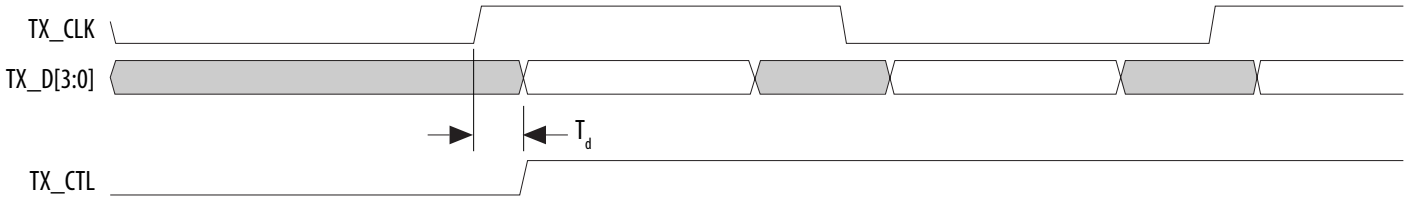

Table 57. RGMII RX Timing Requirements for Arria V Devices

Symbol	Description	Min	Typ	Unit
T_{clk} (1000Base-T)	RX_CLK clock period	—	8	ns
T_{clk} (100Base-T)	RX_CLK clock period	—	40	ns
T_{clk} (10Base-T)	RX_CLK clock period	—	400	ns
T_{su}	RX_D/RX_CTL setup time	1	—	ns
T_h	RX_D/RX_CTL hold time	1	—	ns

Figure 15. RGMII RX Timing Diagram

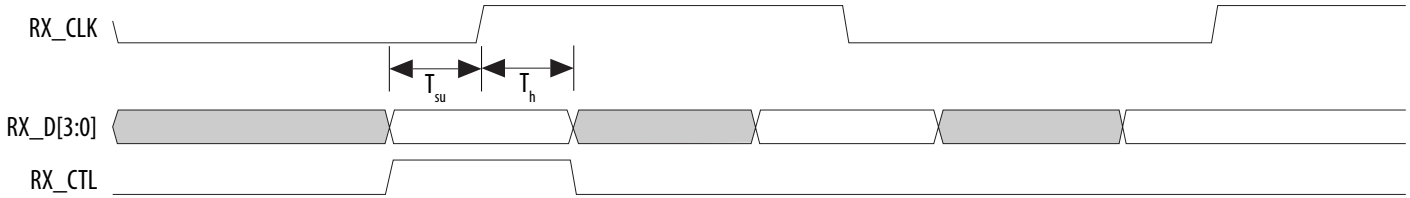

Table 58. Management Data Input/Output (MDIO) Timing Requirements for Arria V Devices

Symbol	Description	Min	Typ	Max	Unit
T_{clk}	MDC clock period	—	400	—	ns
T_d	MDC to MDIO output data delay	10	—	20	ns
T_s	Setup time for MDIO data	10	—	—	ns
T_h	Hold time for MDIO data	0	—	—	ns

Figure 16. MDIO Timing Diagram

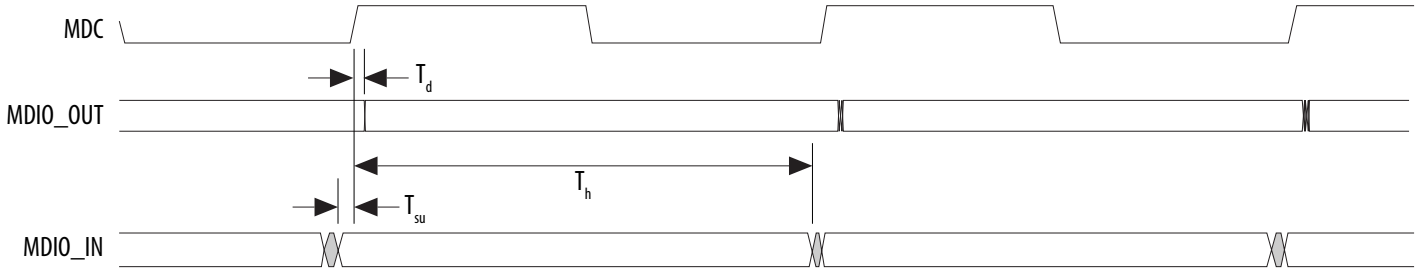

1.2.4.8. I²C Timing Characteristics

Table 59. I²C Timing Requirements for Arria V Devices

Symbol	Description	Standard Mode		Fast Mode		Unit
		Min	Max	Min	Max	
T_{clk}	Serial clock (SCL) clock period	10	—	2.5	—	µs
$T_{clkhigh}$	SCL high time	4.7	—	0.6	—	µs
T_{clklow}	SCL low time	4	—	1.3	—	µs
T_s	Setup time for serial data line (SDA) data to SCL	0.25	—	0.1	—	µs
T_h	Hold time for SCL to SDA data	0	3.45	0	0.9	µs
T_d	SCL to SDA output data delay	—	0.2	—	0.2	µs
T_{su_start}	Setup time for a repeated start condition	4.7	—	0.6	—	µs
T_{hd_start}	Hold time for a repeated start condition	4	—	0.6	—	µs
T_{su_stop}	Setup time for a stop condition	4	—	0.6	—	µs

Figure 17. I²C Timing Diagram

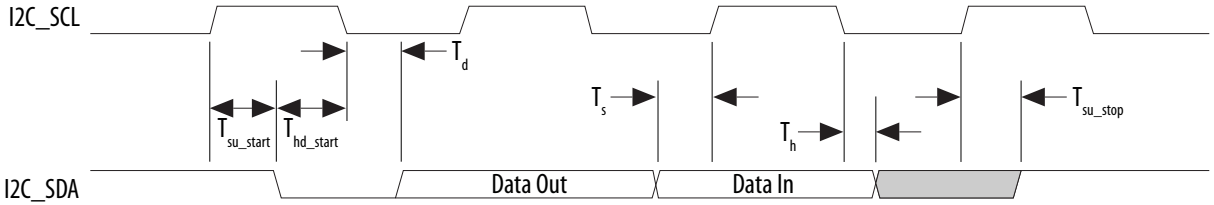

1.2.4.9. NAND Timing Characteristics

Table 60. NAND ONFI 1.0 Timing Requirements for Arria V Devices

The NAND controller supports Open NAND FLASH Interface (ONFI) 1.0 Mode 5 timing as well as legacy NAND devices. This table lists the requirements for ONFI 1.0 mode 5 timing. The HPS NAND controller can meet this timing by programming the C4 output of the main HPS PLL and timing registers provided in the NAND controller.

Symbol	Description	Min	Max	Unit
T_{wp} (90)	Write enable pulse width	10	—	ns
T_{wh} (90)	Write enable hold time	7	—	ns
T_{rp} (90)	Read enable pulse width	10	—	ns
T_{reh} (90)	Read enable hold time	7	—	ns
T_{clesu} (90)	Command latch enable to write enable setup time	10	—	ns
T_{cleh} (90)	Command latch enable to write enable hold time	5	—	ns
T_{cesu} (90)	Chip enable to write enable setup time	15	—	ns
T_{ceh} (90)	Chip enable to write enable hold time	5	—	ns
T_{alesu} (90)	Address latch enable to write enable setup time	10	—	ns
T_{aleh} (90)	Address latch enable to write enable hold time	5	—	ns
T_{dsu} (90)	Data to write enable setup time	10	—	ns

continued...

(90) Timing of the NAND interface is controlled through the NAND configuration registers.

Symbol	Description	Min	Max	Unit
T_{dh}(90)	Data to write enable hold time	5	—	ns
T_{cea}	Chip enable to data access time	—	25	ns
T_{rea}	Read enable to data access time	—	16	ns
T_{rhz}	Read enable to data high impedance	—	100	ns
T_{rr}	Ready to read enable low	20	—	ns

Figure 18. NAND Command Latch Timing Diagram

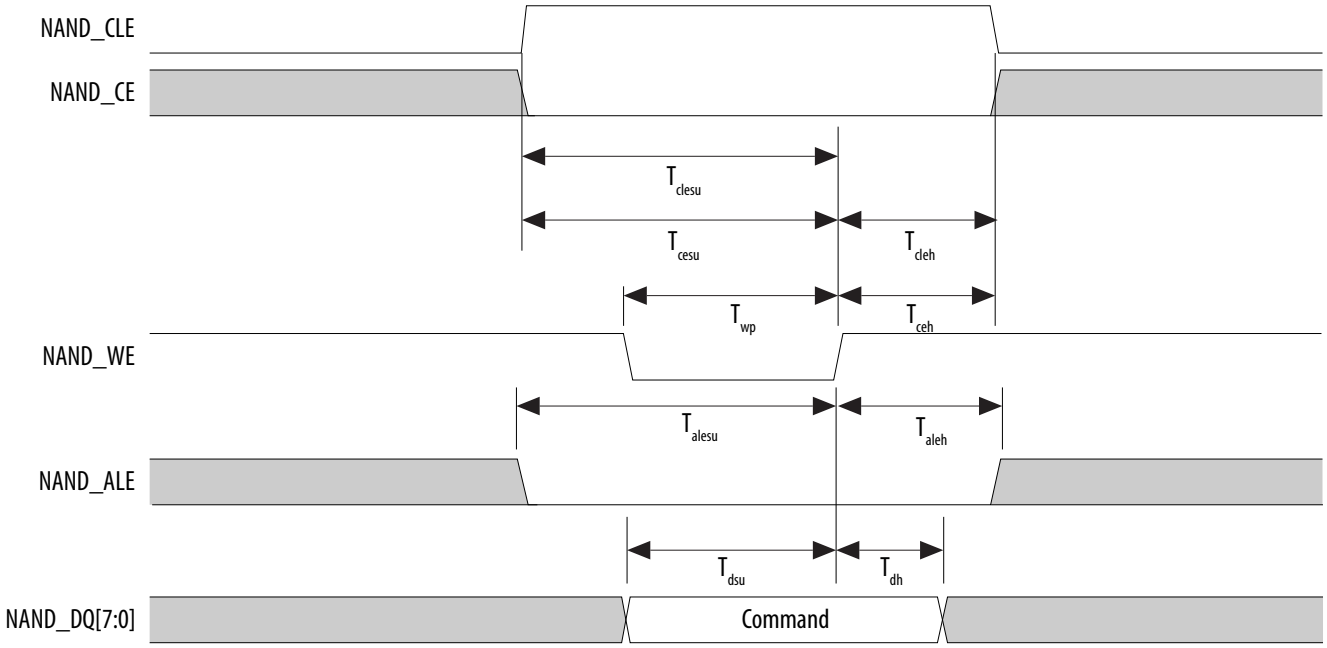

Figure 19. NAND Address Latch Timing Diagram

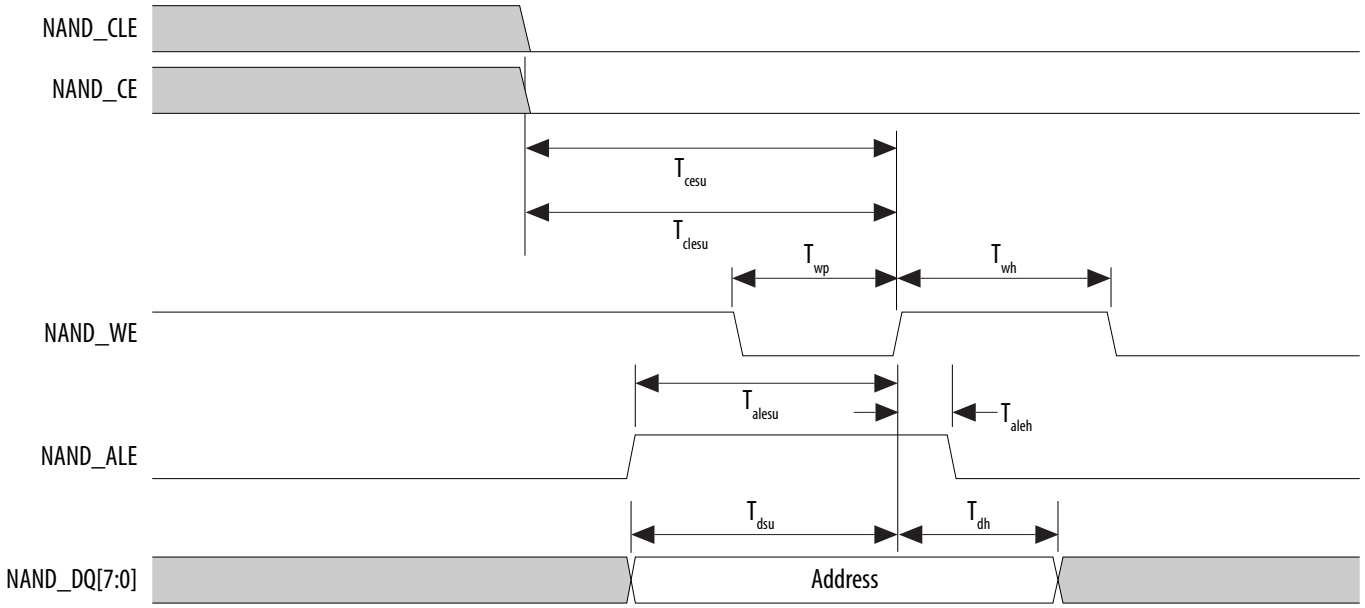

Figure 20. NAND Data Write Timing Diagram

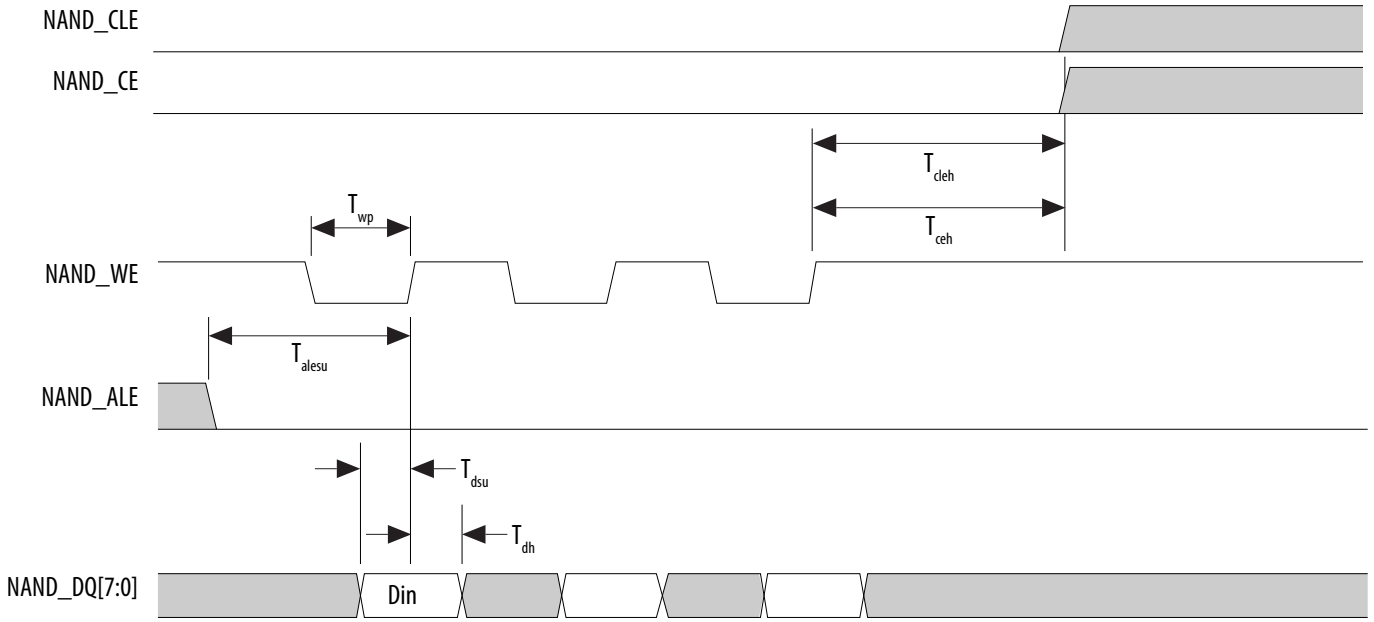

Figure 21. NAND Data Read Timing Diagram

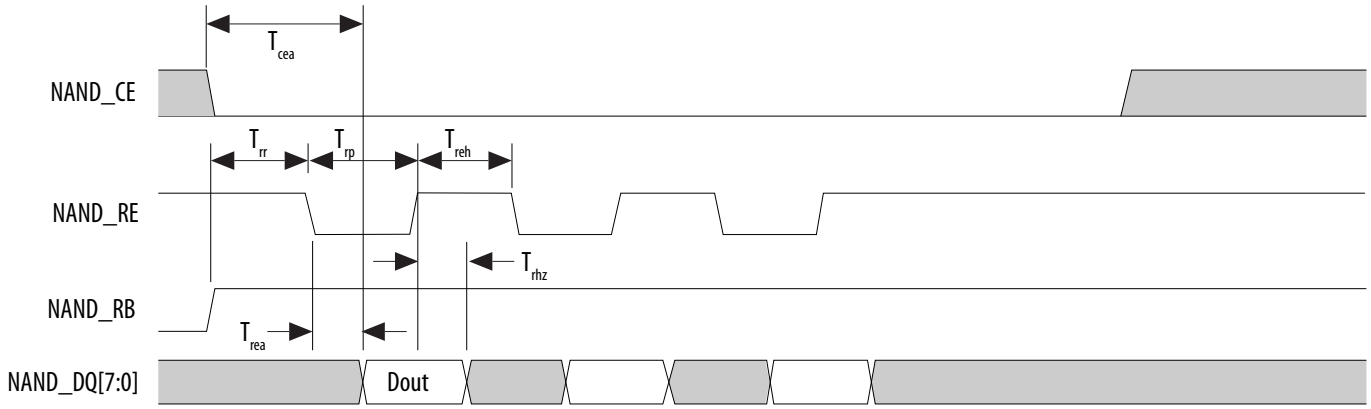

1.2.4.10. Arm Trace Timing Characteristics

Table 61. Arm Trace Timing Requirements for Arria V Devices

Most debugging tools have a mechanism to adjust the capture point of trace data.

Description	Min	Max	Unit
CLK clock period	12.5	—	ns
CLK maximum duty cycle	45	55	%
CLK to D0 –D7 output data delay	–1	1	ns

1.2.4.11. UART Interface

The maximum UART baud rate is 6.25 megasymbols per second.

1.2.4.12. GPIO Interface

The minimum detectable general-purpose I/O (GPIO) pulse width is 2 µs. The pulse width is based on a debounce clock frequency of 1 MHz.

1.2.4.13. HPS JTAG Timing Specifications

Table 62. HPS JTAG Timing Parameters and Values for Arria V Devices

Symbol	Description	Min	Max	Unit
t_{JCP}	TCK clock period	30	—	ns
t_{JCH}	TCK clock high time	14	—	ns
t_{JCL}	TCK clock low time	14	—	ns
$t_{JPSU\ (TDI)}$	TDI JTAG port setup time	2	—	ns
$t_{JPSU\ (TMS)}$	TMS JTAG port setup time	3	—	ns
t_{JPH}	JTAG port hold time	5	—	ns
t_{JPCO}	JTAG port clock to output	—	12(91)	ns
t_{JPZX}	JTAG port high impedance to valid output	—	14(91)	ns
t_{JPXZ}	JTAG port valid output to high impedance	—	14(91)	ns

1.3. Configuration Specifications

This section provides configuration specifications and timing for Arria V devices.

1.3.1. POR Specifications

Table 63. Fast and Standard POR Delay Specification for Arria V Devices

POR Delay	Minimum	Maximum	Unit
Fast	4	12(92)	ms
Standard	100	300	ms

(91) A 1-ns adder is required for each $V_{CCIO\ _HPS}$ voltage step down from 3.0 V. For example, t_{JPCO}= 13 ns if $V_{CCIO\ _HPS}$ of the TDO I/O bank = 2.5 V, or 14 ns if it equals 1.8 V.

(92) The maximum pulse width of the fast POR delay is 12 ms, providing enough time for the PCIe hard IP to initialize after the POR trip.

Related Information

MSEL Pin Settings
Provides more information about POR delay based on MSEL pin settings for each configuration scheme.

1.3.2. FPGA JTAG Configuration Timing

Table 64. FPGA JTAG Timing Parameters and Values for Arria V Devices

Symbol	Description	Min	Max	Unit
t_{JCP}	TCK clock period	30, 167[93]	—	ns
t_{JCH}	TCK clock high time	14	—	ns
t_{JCL}	TCK clock low time	14	—	ns
$t_{JPSU\ (TDI)}$	TDI JTAG port setup time	2	—	ns
$t_{JPSU\ (TMS)}$	TMS JTAG port setup time	3	—	ns
t_{JPH}	JTAG port hold time	5	—	ns
t_{JPCO}	JTAG port clock to output	—	12[94]	ns
t_{JPZX}	JTAG port high impedance to valid output	—	14[94]	ns
t_{JPXZ}	JTAG port valid output to high impedance	—	14[94]	ns

1.3.3. FPP Configuration Timing

1.3.3.1. DCLK-to-DATA[] Ratio (r) for FPP Configuration

Fast passive parallel (FPP) configuration requires a different DCLK-to-DATA[] ratio when you turn on encryption or the compression feature.

(93) The minimum TCK clock period is 167 ns if V_{CCBAT} is within the range 1.2 V – 1.5 V when you perform the volatile key programming.

(94) A 1-ns adder is required for each VCCIO voltage step down from 3.0 V. For example, tJPCO= 13 ns if VCCIO of the TDO I/O bank = 2.5 V, or 14 ns if it equals 1.8 V.

Depending on the DCLK-to-DATA[] ratio, the host must send a DCLK frequency that is *r* times the DATA[] rate in byte per second (Bps) or word per second (Wps). For example, in FPP ×16 where the *r* is 2, the DCLK frequency must be 2 times the DATA[] rate in Wps.

Table 65. DCLK-to-DATA[] Ratio for Arria V Devices

Configuration Scheme	Encryption	Compression	DCLK-to-DATA[] Ratio (r)
FPP (8-bit wide)	Off	Off	1
	On	Off	1
	Off	On	2
	On	On	2
FPP (16-bit wide)	Off	Off	1
	On	Off	2
	Off	On	4
	On	On	4

1.3.3.2. FPP Configuration Timing when DCLK-to-DATA[] = 1

When you enable decompression or the design security feature, the DCLK-to-DATA[] ratio varies for FPP ×8 and FPP ×16. For the respective DCLK-to-DATA[] ratio, refer to the *DCLK-to-DATA[] Ratio for Arria V Devices* table.

Table 66. FPP Timing Parameters When DCLK-to-DATA[] Ratio is 1 for Arria V Devices

Symbol	Parameter	Minimum	Maximum	Unit
t_{CF2CD}	nCONFIG low to CONF_DONE low	—	600	ns
t_{CF2ST0}	nCONFIG low to nSTATUS low	—	600	ns
t_{CFG}	nCONFIG low pulse width	2	—	µs
t_{STATUS}	nSTATUS low pulse width	268	1506(95)	µs

continued...

(95) You can obtain this value if you do not delay configuration by extending the nCONFIG or the nSTATUS low pulse width.

Symbol	Parameter	Minimum	Maximum	Unit
t_{CF2ST1}	nCONFIG high to nSTATUS high	—	1506[96]	µs
t_{CF2CK}[97]	nCONFIG high to first rising edge on DCLK	1506	—	µs
t_{ST2CK}[97]	nSTATUS high to first rising edge of DCLK	2	—	µs
t_{DSU}	DATA[] setup time before rising edge on DCLK	5.5	—	ns
t_{DH}	DATA[] hold time after rising edge on DCLK	0	—	ns
t_{CH}	DCLK high time	0.45 × 1/f_{MAX}	—	s
t_{CL}	DCLK low time	0.45 × 1/f_{MAX}	—	s
t_{CLK}	DCLK period	1/f_{MAX}	—	s
f_{MAX}	DCLK frequency (FPP ×8/ ×16)	—	125	MHz
t_{CD2UM}	CONF_DONE high to user mode[98]	175	437	µs
t_{CD2CU}	CONF_DONE high to CLKUSR enabled	4× maximum DCLK period	—	—
t_{CD2UMC}	CONF_DONE high to user mode with CLKUSR option on	t_{CD2CU} + (T_{init} × CLKUSR period)	—	—
T_{init}	Number of clock cycles required for device initialization	8,576	—	Cycles

Related Information

FPP Configuration Timing
Provides the FPP configuration timing waveforms.

(96) You can obtain this value if you do not delay configuration by externally holding the nSTATUS low.

(97) If nSTATUS is monitored, follow the t_{ST2CK} specification. If nSTATUS is not monitored, follow the t_{CF2CK} specification.

(98) The minimum and maximum numbers apply only if you chose the internal oscillator as the clock source for initializing the device.

1.3.3.3. FPP Configuration Timing when DCLK-to-DATA[] >1

Table 67. FPP Timing Parameters When DCLK-to-DATA[] Ratio is >1 for Arria V Devices

Use these timing parameters when you use the decompression and design security features.

Symbol	Parameter	Minimum	Maximum	Unit
t_{CF2CD}	nCONFIG low to CONF_DONE low	—	600	ns
t_{CF2ST0}	nCONFIG low to nSTATUS low	—	600	ns
t_{CFG}	nCONFIG low pulse width	2	—	µs
t_{STATUS}	nSTATUS low pulse width	268	1506(99)	µs
t_{CF2ST1}	nCONFIG high to nSTATUS high	—	1506(100)	µs
t_{CF2CK}(101)	nCONFIG high to first rising edge on DCLK	1506	—	µs
t_{ST2CK}(101)	nSTATUS high to first rising edge of DCLK	2	—	µs
t_{DSU}	DATA[] setup time before rising edge on DCLK	5.5	—	ns
t_{DH}	DATA[] hold time after rising edge on DCLK	$N - 1/f_{DCLK}$(102)	—	s
t_{CH}	DCLK high time	$0.45 \times 1/f_{MAX}$	—	s
t_{CL}	DCLK low time	$0.45 \times 1/f_{MAX}$	—	s
t_{CLK}	DCLK period	$1/f_{MAX}$	—	s
f_{MAX}	DCLK frequency (FPP ×8/ ×16)	—	125	MHz
t_R	Input rise time	—	40	ns
t_F	Input fall time	—	40	ns

continued...

(99) This value can be obtained if you do not delay configuration by extending the nCONFIG or nSTATUS low pulse width.

(100) This value can be obtained if you do not delay configuration by externally holding nSTATUS low.

(101) If nSTATUS is monitored, follow the t_{ST2CK} specification. If nSTATUS is not monitored, follow the t_{CF2CK} specification.

(102) *N* is the DCLK-to-DATA[] ratio and f_{DCLK} is the DCLK frequency of the system.

Symbol	Parameter	Minimum	Maximum	Unit
t_{CD2UM}	CONF_DONE high to user mode(103)	175	437	µs
t_{CD2CU}	CONF_DONE high to CLKUSR enabled	4 × maximum DCLK period	—	—
t_{CD2UMC}	CONF_DONE high to user mode with CLKUSR option on	t_{CD2CU} + (T_{init} × CLKUSR period)	—	—
T_{init}	Number of clock cycles required for device initialization	8,576	—	Cycles

Related Information

FPP Configuration Timing
Provides the FPP configuration timing waveforms.

1.3.4. Active Serial (AS) Configuration Timing

Table 68. AS Timing Parameters for AS ×1 and ×4 Configurations in Arria V Devices

The minimum and maximum numbers apply to both the internal oscillator and CLKUSR when either one is used as the clock source for device configuration.

The t_{CF2CD}, t_{CF2ST0}, t_{CFG}, t_{STATUS}, and t_{CF2ST1} timing parameters are identical to the timing parameters for passive serial (PS) mode listed in *PS Timing Parameters for Arria V Devices* table. You can obtain the t_{CF2ST1} value if you do not delay configuration by externally holding nSTATUS low.

Symbol	Parameter	Condition	Minimum	Maximum	Unit
t_{CO} (104)	DCLK falling edge to the AS_DATA0/ASDO output	—	—	2	ns
t_{SU}(105)	Data setup time before the falling edge on DCLK	—	1.5	—	ns
t_{DH}(105)	Data hold time after the falling edge on DCLK	–3 speed grade	1.7	—	ns

continued...

(103) The minimum and maximum numbers apply only if you chose the internal oscillator as the clock source for initializing the device.

(104) Load capacitance for DCLK = 6 pF and AS_DATA/ASDO = 8 pF. Intel recommends obtaining the t_{CO} for a given link (including receiver, transmission lines, connectors, termination resistors, and other components) through IBIS or HSPICE simulation.

(105) To evaluate the data setup (t_{SU}) and data hold time (t_{DH}) slack on your board in order to ensure you are meeting the t_{SU} and t_{DH} requirement, Intel recommends following the guideline in the "Evaluating Data Setup and Hold Timing Slack" chapter in *AN822: Intel FPGA Configuration Device Migration Guideline*.

Symbol	Parameter	Condition	Minimum	Maximum	Unit
		–4 speed grade	2.0	—	ns
		–5 speed grade	2.3	—	ns
		–6 speed grade	2.6	—	ns
t_{CD2UM}	CONF_DONE high to user mode	—	175	437	µs
t_{CD2CU}	CONF_DONE high to CLKUSR enabled	—	4 × maximum DCLK period	—	—
t_{CD2UMC}	CONF_DONE high to user mode with CLKUSR option on	—	t_{CD2CU} + (T_{init} × CLKUSR period)	—	—
T_{init}	Number of clock cycles required for device initialization	—	8,576	—	Cycles

Related Information

- Passive Serial (PS) Configuration Timing on page 82
- AS Configuration Timing
  Provides the AS configuration timing waveform.
- Evaluating Data Setup and Hold Timing Slack chapter, AN822: Intel FPGA Configuration Device Migration Guideline

1.3.5. DCLK Frequency Specification in the AS Configuration Scheme

Table 69. DCLK Frequency Specification in the AS Configuration Scheme

This table lists the internal clock frequency specification for the AS configuration scheme. The DCLK frequency specification applies when you use the internal oscillator as the configuration clock source. The AS multi-device configuration scheme does not support DCLK frequency of 100 MHz.

Parameter	Minimum	Typical	Maximum	Unit
DCLK frequency in AS configuration scheme	5.3	7.9	12.5	MHz
	10.6	15.7	25.0	MHz
	21.3	31.4	50.0	MHz
	42.6	62.9	100.0	MHz

1.3.6. Passive Serial (PS) Configuration Timing

Table 70. PS Timing Parameters for Arria V Devices

Symbol	Parameter	Minimum	Maximum	Unit
t_{CF2CD}	nCONFIG low to CONF_DONE low	—	600	ns
t_{CF2ST0}	nCONFIG low to nSTATUS low	—	600	ns
t_{CFG}	nCONFIG low pulse width	2	—	µs
t_{STATUS}	nSTATUS low pulse width	268	1506(106)	µs
t_{CF2ST1}	nCONFIG high to nSTATUS high	—	1506(107)	µs
t_{CF2CK}(108)	nCONFIG high to first rising edge on DCLK	1506	—	µs
t_{ST2CK}(108)	nSTATUS high to first rising edge of DCLK	2	—	µs
t_{DSU}	DATA[] setup time before rising edge on DCLK	5.5	—	ns
t_{DH}	DATA[] hold time after rising edge on DCLK	0	—	ns
t_{CH}	DCLK high time	0.45 × 1/f_{MAX}	—	s
t_{CL}	DCLK low time	0.45 × 1/f_{MAX}	—	s
t_{CLK}	DCLK period	1/f_{MAX}	—	s
f_{MAX}	DCLK frequency	—	125	MHz
t_{CD2UM}	CONF_DONE high to user mode(109)	175	437	µs

continued...

(106) You can obtain this value if you do not delay configuration by extending the nCONFIG or nSTATUS low pulse width.

(107) You can obtain this value if you do not delay configuration by externally holding nSTATUS low.

(108) If nSTATUS is monitored, follow the t_{ST2CK} specification. If nSTATUS is not monitored, follow the t_{CF2CK} specification.

(109) The minimum and maximum numbers apply only if you chose the internal oscillator as the clock source for initializing the device.

Symbol	Parameter	Minimum	Maximum	Unit
t_{CD2CU}	CONF_DONE high to CLKUSR enabled	4 × maximum DCLK period	—	—
t_{CD2UMC}	CONF_DONE high to user mode with CLKUSR option on	t_{CD2CU} + (T_{init} × CLKUSR period)	—	—
T_{init}	Number of clock cycles required for device initialization	8,576	—	Cycles

Related Information

PS Configuration Timing
Provides the PS configuration timing waveform.

1.3.7. Initialization

Table 71. Initialization Clock Source Option and the Maximum Frequency for Arria V Devices

Initialization Clock Source	Configuration Scheme	Maximum Frequency (MHz)	Minimum Number of Clock Cycles
Internal Oscillator	AS, PS, and FPP	12.5	T_{init}
CLKUSR(110)	PS and FPP	125	
	AS	100	
DCLK	PS and FPP	125	

(110) To enable CLKUSR as the initialization clock source, turn on the **Enable user-supplied start-up clock (CLKUSR)** option in the Intel Quartus Prime software from the **General** panel of the **Device and Pin Options** dialog box.

1.3.8. Configuration Files

Table 72. Uncompressed .rbf Sizes for Arria V Devices

Use this table to estimate the file size before design compilation. Different configuration file formats, such as a hexadecimal file (`.hex`) or tabular text file (`.ttf`) format, have different file sizes.

For the different types of configuration file and file sizes, refer to the Intel Quartus Prime software. However, for a specific version of the Intel Quartus Prime software, any design targeted for the same device has the same uncompressed configuration file size.

The IOCSR raw binary file (`.rbf`) size is specifically for the Configuration via Protocol (CvP) feature.

Variant	Member Code	Configuration .rbf Size (bits)	IOCSR .rbf Size (bits)
Arria V GX	A1	71,015,712	439,960
	A3	71,015,712	439,960
	A5	101,740,800	446,360
	A7	101,740,800	446,360
	B1	137,785,088	457,368
	B3	137,785,088	457,368
	B5	185,915,808	463,128
	B7	185,915,808	463,128
Arria V GT	C3	71,015,712	439,960
	C7	101,740,800	446,360
	D3	137,785,088	457,368
	D7	185,915,808	463,128
Arria V SX	B3	185,903,680	450,968
	B5	185,903,680	450,968
Arria V ST	D3	185,903,680	450,968
	D5	185,903,680	450,968

1.3.9. Minimum Configuration Time Estimation

Table 73. Minimum Configuration Time Estimation for Arria V Devices

The estimated values are based on the configuration `.rbf` sizes in Uncompressed .rbf Sizes for Arria V Devices table.

Variant	Member Code	Active Serial(111)			Fast Passive Parallel(112)		
		Width	DCLK (MHz)	Minimum Configuration Time (ms)	Width	DCLK (MHz)	Minimum Configuration Time (ms)
Arria V GX	A1	4	100	178	16	125	36
	A3	4	100	178	16	125	36
	A5	4	100	255	16	125	51
	A7	4	100	255	16	125	51
	B1	4	100	344	16	125	69
	B3	4	100	344	16	125	69
	B5	4	100	465	16	125	93
	B7	4	100	465	16	125	93
Arria V GT	C3	4	100	178	16	125	36
	C7	4	100	255	16	125	51
	D3	4	100	344	16	125	69
	D7	4	100	465	16	125	93
Arria V SX	B3	4	100	465	16	125	93
	B5	4	100	465	16	125	93
Arria V ST	D3	4	100	465	16	125	93
	D5	4	100	465	16	125	93

(111) `DCLK` frequency of 100 MHz using external `CLKUSR`.

(112) Maximum FPGA FPP bandwidth may exceed bandwidth available from some external storage or control logic.

Related Information

Configuration Files on page 84

1.3.10. Remote System Upgrades

Table 74. Remote System Upgrade Circuitry Timing Specifications for Arria V Devices

Parameter	Minimum	Unit
$t_{RU_nCONFIG}$ (113)	250	ns
$t_{RU_nRSTIMER}$ (114)	250	ns

Related Information

- Remote System Upgrade State Machine
  Provides more information about configuration reset (`RU_CONFIG`) signal.
- User Watchdog Timer
  Provides more information about reset_timer (`RU_nRSTIMER`) signal.

1.3.11. User Watchdog Internal Oscillator Frequency Specifications

Table 75. User Watchdog Internal Oscillator Frequency Specifications for Arria V Devices

Parameter	Minimum	Typical	Maximum	Unit
User watchdog internal oscillator frequency	5.3	7.9	12.5	MHz

1.4. I/O Timing

Intel offers two ways to determine I/O timing—the Excel-based I/O timing and the Intel Quartus Prime Timing Analyzer.

(113) This is equivalent to strobing the reconfiguration input of the Remote Update Intel FPGA IP core high for the minimum timing specification.

(114) This is equivalent to strobing the reset timer input of the Remote Update Intel FPGA IP core high for the minimum timing specification.

Excel-based I/O timing provides pin timing performance for each device density and speed grade. The data is typically used prior to designing the FPGA to get an estimate of the timing budget as part of the link timing analysis.

The Intel Quartus Prime Timing Analyzer provides a more accurate and precise I/O timing data based on the specifics of the design after you complete place-and-route.

Related Information

Arria V I/O Timing Spreadsheet
Provides the Arria V Excel-based I/O timing spreadsheet.

1.4.1. Programmable IOE Delay

Table 76. I/O element (IOE) Programmable Delay for Arria V Devices

Parameter(115)	Available Settings	Minimum Offset(116)	Fast Model		Slow Model					Unit
			Industrial	Commercial	–C4	–C5	–C6	–I3	–I5	
D1	32	0	0.508	0.517	0.870	1.063	1.063	0.872	1.057	ns
D3	8	0	1.763	1.795	2.999	3.496	3.571	3.031	3.643	ns
D4	32	0	0.508	0.518	0.869	1.063	1.063	1.063	1.057	ns
D5	32	0	0.508	0.517	0.870	1.063	1.063	0.872	1.057	ns

(115) You can set this value in the Intel Quartus Prime software by selecting **D1**, **D3**, **D4**, and **D5** in the **Assignment Name** column of **Assignment Editor**.

(116) Minimum offset does not include the intrinsic delay.

1.4.2. Programmable Output Buffer Delay

Table 77. Programmable Output Buffer Delay for Arria V Devices

This table lists the delay chain settings that control the rising and falling edge delays of the output buffer.

You can set the programmable output buffer delay in the Intel Quartus Prime software by setting the **Output Buffer Delay Control** assignment to either positive, negative, or both edges, with the specific values stated here (in ps) for the **Output Buffer Delay** assignment.

Symbol	Parameter	Typical	Unit
D_{OUTBUF}	Rising and/or falling edge delay	0 (default)	ps
		50	ps
		100	ps
		150	ps

1.5. Glossary

Table 78. Glossary

Term	Definition
Differential I/O standards	Receiver Input Waveforms

continued...

Term	Definition
	Single-Ended Waveform 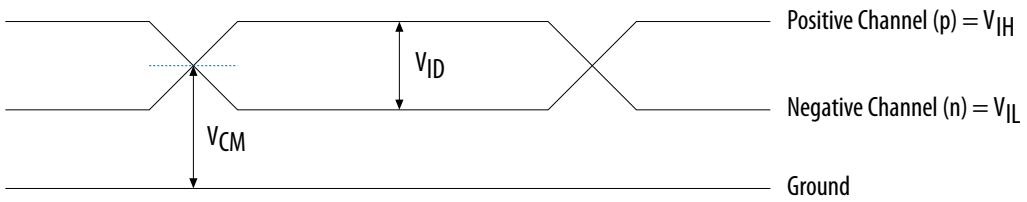 **Differential Waveform** 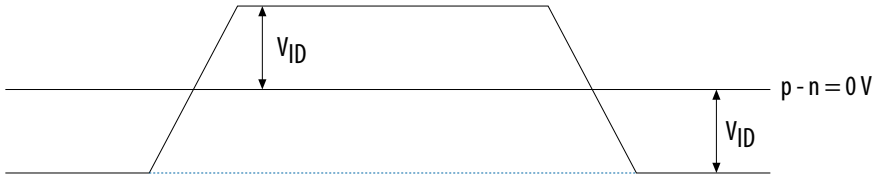 Transmitter Output Waveforms

continued...

Term	Definition
	Single-Ended Waveform 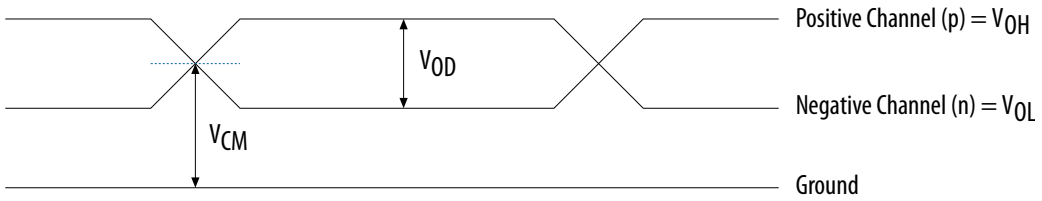 **Differential Waveform** 
f_{HSCLK}	Left/right PLL input clock frequency.
f_{HSDR}	High-speed I/O block—Maximum/minimum LVDS data transfer rate (f_{HSDR} =1/TUI).
J	High-speed I/O block—Deserialization factor (width of parallel data bus).
JTAG timing specifications	JTAG Timing Specifications

continued...

Term	Definition
	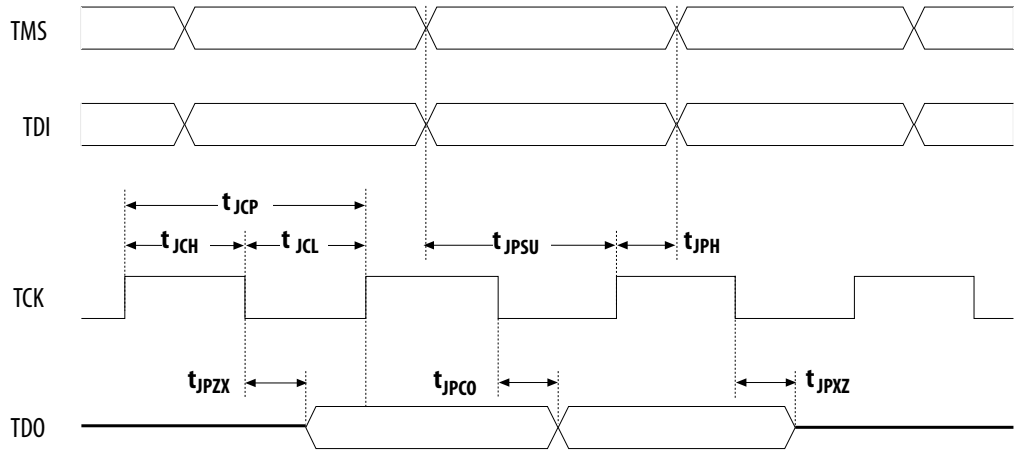
PLL specifications	Diagram of PLL specifications

continued...

Term	Definition
	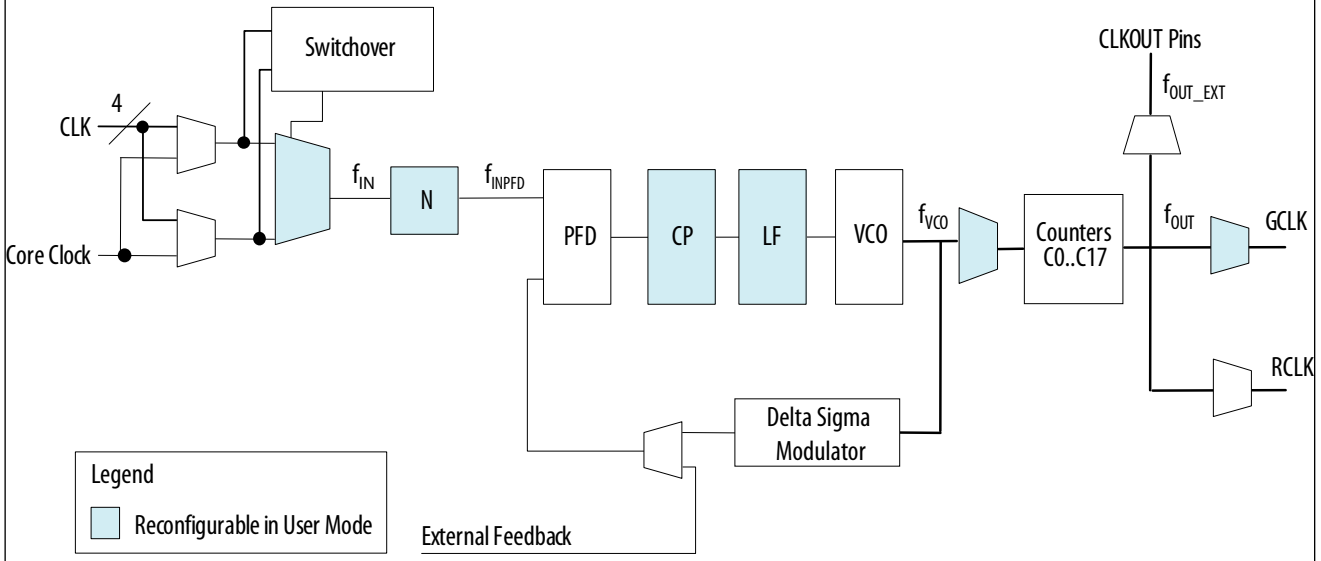 Note: (1) Core Clock can only be fed by dedicated clock input pins or PLL outputs.
R_L	Receiver differential input discrete resistor (external to the Arria V device).
Sampling window (SW)	Timing diagram—The period of time during which the data must be valid in order to capture it correctly. The setup and hold times determine the ideal strobe position in the sampling window, as shown: 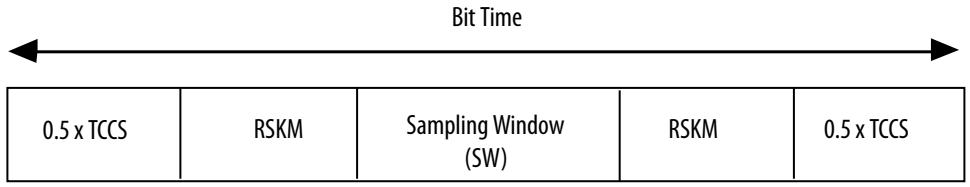

continued...

Term	Definition
Single-ended voltage referenced I/O standard	The JEDEC standard for the SSTL and HSTL I/O defines both the AC and DC input signal values. The AC values indicate the voltage levels at which the receiver must meet its timing specifications. The DC values indicate the voltage levels at which the final logic state of the receiver is unambiguously defined. After the receiver input has crossed the AC value, the receiver changes to the new logic state. The new logic state is then maintained as long as the input stays beyond the DC threshold. This approach is intended to provide predictable receiver timing in the presence of input waveform ringing. Single-Ended Voltage Referenced I/O Standard 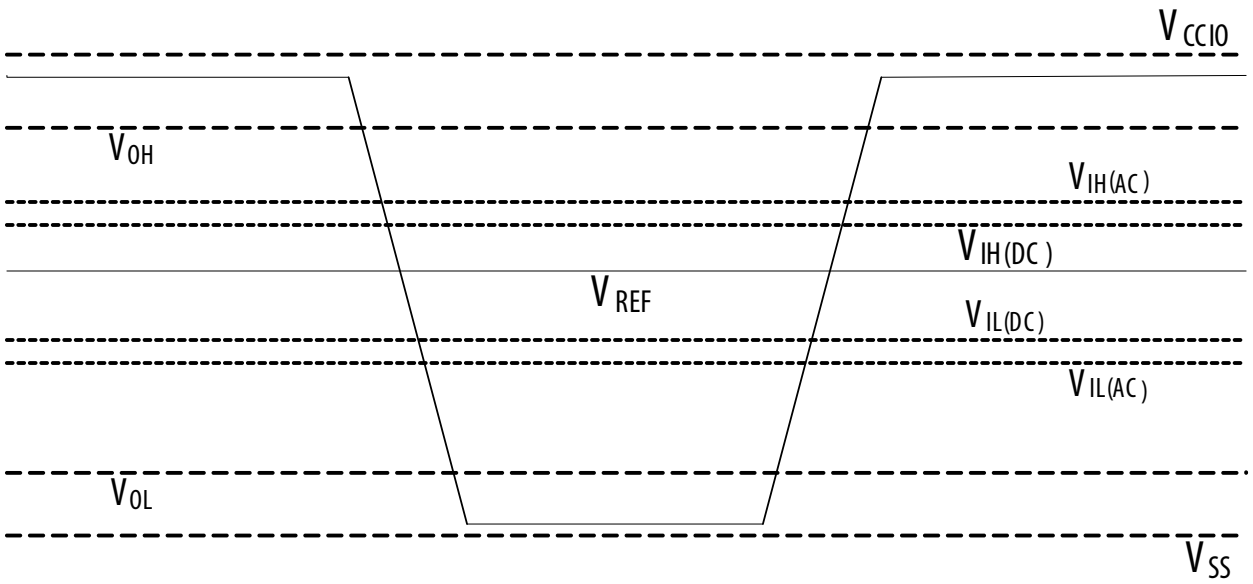
t_C	High-speed receiver/transmitter input and output clock period.
TCCS (channel-to-channel-skew)	The timing difference between the fastest and slowest output edges, including the t_{CO} variation and clock skew, across channels driven by the same PLL. The clock is included in the TCCS measurement (refer to the Timing Diagram figure under SW in this table).
t_{DUTY}	High-speed I/O block—Duty cycle on high-speed transmitter output clock.
t_{FALL}	Signal high-to-low transition time (80–20%)
t_{INCCJ}	Cycle-to-cycle jitter tolerance on the PLL clock input

continued...

Term	Definition
t_{OUTPJ_IO}	Period jitter on the GPIO driven by a PLL
t_{OUTPJ_DC}	Period jitter on the dedicated clock output driven by a PLL
t_{RISE}	Signal low-to-high transition time (20–80%)
Timing Unit Interval (TUI)	The timing budget allowed for skew, propagation delays, and the data sampling window. (TUI = 1/(Receiver Input Clock Frequency Multiplication Factor) = t_C/w)
$V_{CM(DC)}$	DC common mode input voltage.
V_{ICM}	Input common mode voltage—The common mode of the differential signal at the receiver.
V_{ID}	Input differential voltage swing—The difference in voltage between the positive and complementary conductors of a differential transmission at the receiver.
$V_{DIF(AC)}$	AC differential input voltage—Minimum AC input differential voltage required for switching.
$V_{DIF(DC)}$	DC differential input voltage— Minimum DC input differential voltage required for switching.
V_{IH}	Voltage input high—The minimum positive voltage applied to the input which is accepted by the device as a logic high.
$V_{IH(AC)}$	High-level AC input voltage
$V_{IH(DC)}$	High-level DC input voltage
V_{IL}	Voltage input low—The maximum positive voltage applied to the input which is accepted by the device as a logic low.
$V_{IL(AC)}$	Low-level AC input voltage
$V_{IL(DC)}$	Low-level DC input voltage
V_{OCM}	Output common mode voltage—The common mode of the differential signal at the transmitter.
V_{OD}	Output differential voltage swing—The difference in voltage between the positive and complementary conductors of a differential transmission line at the transmitter.
V_{SWING}	Differential input voltage
V_X	Input differential cross point voltage
V_{OX}	Output differential cross point voltage
W	High-speed I/O block—Clock boost factor

1.6. Arria V GX, GT, SX, and ST Device Datasheet Revision History

Document Version	Changes
2019.04.26	• Added a note for Conversion Time in the *Internal Temperature Sensing Diode Specifications for Arria V Devices* table. • Updated t_{DH} specifications in the *AS Timing Parameters for AS ×1 and ×4 Configurations in Arria V Devices* table.
2019.01.25	• Added *Arria V Devices Overshoot Duration* diagram. • Changed "VCO post-scale counter K value" to "VCO post divider value" in the f_{VCO} note in the *PLL Specifications for Arria V Devices* table. • Updated the *AS Timing Parameters for AS ×1 and ×4 Configurations in Arria V Devices* table. ☐ Updated t_{DH} specifications. These specifications are applicable to the commercial and industrial grade devices. ☐ Added note to t_{CO}, t_{SU}, and t_{DH}. • Removed PowerPlay text from tool name. • Renamed IP cores as per Intel rebranding.

Date	Version	Changes
December 2016	2016.12.09	• Updated V_{ICM} (AC coupled) specifications in Receiver Specifications for Arria V GX and SX Devices table. • Added maximum specification for T_d in Management Data Input/Output (MDIO) Timing Requirements for Arria V Devices table. • Updated T_{init} specifications in the following tables: ☐ FPP Timing Parameters When DCLK-to-DATA[] Ratio is 1 for Arria V Devices ☐ FPP Timing Parameters When DCLK-to-DATA[] Ratio is >1 for Arria V Devices ☐ AS Timing Parameters for AS ×1 and ×4 Configurations in Arria V Devices ☐ PS Timing Parameters for Arria V Devices
June 2016	2016.06.10	• Changed pin capacitance to maximum values. • Updated SPI Master Timing Requirements for Arria V Devices table. ☐ Added T_{su} and T_h specifications. ☐ Removed T_{dinmax} specifications. • Updated SPI Master Timing Diagram. • Updated T_{clk} spec from maximum to minimum in I^2C Timing Requirements for Arria V Devices table.

continued...

Date	Version	Changes
December 2015	2015.12.16	• Updated Quad Serial Peripheral Interface (SPI) Flash Timing Requirements for Arria V Devices table. ☐ Updated F_{clk}, $T_{dutycycle}$, and $T_{dssfrst}$ specifications. ☐ Added T_{qspi_clk}, T_{din_start}, and T_{din_end} specifications. ☐ Removed T_{dinmax} specifications. • Updated the minimum specification for T_{clk} to 16.67 ns and removed the maximum specification in SPI Master Timing Requirements for Arria V Devices table. • Updated Secure Digital (SD)/MultiMediaCard (MMC) Timing Requirements for Arria V Devices table. ☐ Updated T_{clk} to $T_{sdmmc_clk_out}$ symbol. ☐ Updated $T_{sdmmc_clk_out}$ and T_d specifications. ☐ Added T_{sdmmc_clk}, T_{su}, and T_h specifications. ☐ Removed T_{dinmax} specifications. • Updated the following diagrams: ☐ Quad SPI Flash Timing Diagram ☐ SD/MMC Timing Diagram • Updated configuration .rbf sizes for Arria V devices. • Changed instances of *Quartus II* to *Quartus Prime*.
June 2015	2015.06.16	• Added the supported data rates for the following output standards using true LVDS output buffer types in the High-Speed I/O Specifications for Arria V Devices table: ☐ True RSDS output standard: data rates of up to 360 Mbps ☐ True mini-LVDS output standard: data rates of up to 400 Mbps • Added note in the condition for Transmitter—Emulated Differential I/O Standards f_{HSDR} data rate parameter in the High-Speed I/O Specifications for Arria V Devices table. Note: When using True LVDS RX channels for emulated LVDS TX channel, only serialization factors 1 and 2 are supported. • Changed Queued Serial Peripheral Interface (QSPI) to Quad Serial Peripheral Interface (SPI) Flash. • Updated T_h location in I^2C Timing Diagram. • Updated T_{wp} location in NAND Address Latch Timing Diagram. • Corrected the unit for t_{DH} from ns to s in FPP Timing Parameters When DCLK-to-DATA[] Ratio is >1 for Arria V Devices table. • Updated the maximum value for t_{CO} from 4 ns to 2 ns in AS Timing Parameters for AS ×1 and ×4 Configurations in Arria V Devices table. • Moved the following timing diagrams to the Configuration, Design Security, and Remote System Upgrades in Arria V Devices chapter. ☐ FPP Configuration Timing Waveform When DCLK-to-DATA[] Ratio is 1 ☐ FPP Configuration Timing Waveform When DCLK-to-DATA[] Ratio is >1 ☐ AS Configuration Timing Waveform ☐ PS Configuration Timing Waveform

continued...

Date	Version	Changes
January 2015	2015.01.30	• Updated the description for $V_{CC_AUX_SHARED}$ to "HPS auxiliary power supply" in the following tables: ☐ Absolute Maximum Ratings for Arria V Devices ☐ HPS Power Supply Operating Conditions for Arria V SX and ST Devices • Added statement in I/O Standard Specifications: You must perform timing closure analysis to determine the maximum achievable frequency for general purpose I/O standards. • Updated the conditions for transceiver reference clock rise time and fall time: Measure at ±60 mV of differential signal. Added a note to the conditions: REFCLK performance requires to meet transmitter REFCLK phase noise specification. • Updated the description in Periphery Performance Specifications to mention that proper timing closure is required in design. • Updated HPS Clock Performance main_base_clk specifications from 525 MHz (for –I3 speed grade) and 462 MHz (for –C4 speed grade) to 400 MHz. • Updated HPS PLL VCO maximum frequency to 1,600 MHz (for –C5, –I5, and –C6 speed grades), 1,850 MHz (for –C4 speed grade), and 2,100 MHz (for –I3 speed grade). • Changed the symbol for HPS PLL input jitter divide value from NR to N. • Removed "Slave select pulse width (Texas Instruments SSP mode)" parameter from the following tables: ☐ SPI Master Timing Requirements for Arria V Devices ☐ SPI Slave Timing Requirements for Arria V Devices • Added descriptions to USB Timing Characteristics section in HPS Specifications: PHYs that support LPM mode may not function properly with the USB controller due to a timing issue. It is recommended that designers use the MicroChip USB3300 PHY device that has been proven to be successful on the development board. • Added HPS JTAG timing specifications. • Updated FPGA JTAG timing specifications note as follows: A 1-ns adder is required for each V_{CCIO} voltage step down from 3.0 V. For example, t_{JPCO} = 13 ns if V_{CCIO} of the TDO I/O bank = 2.5 V, or 14 ns if it equals 1.8 V. • Updated the value in the V_{ICM} (AC Coupled) row and in note 6 from 650 mV to 750 mV in the Transceiver Specifications for Arria V GT and ST Devices table.
July 2014	3.8	• Added a note in Table 3, Table 4, and Table 5: The power supply value describes the budget for the DC (static) power supply tolerance and does not include the dynamic tolerance requirements. Refer to the PDN tool for the additional budget for the dynamic tolerance requirements. • Updated V_{CC_HPS} specification in Table 5. • Added a note in Table 19: Differential inputs are powered by V_{CCPD} which requires 2.5 V. • Updated "Minimum differential eye opening at the receiver serial input pins" specification in Table 20 and Table 21. • Updated description in "HPS PLL Specifications" section. • Updated VCO range maximum specification in Table 39. • Updated T_d and T_h specifications in Table 45. • Added T_h specification in Table 47 and Figure 13. • Updated a note in Figure 20, Figure 21, and Figure 23 as follows: Do not leave DCLK floating after configuration. DCLK is ignored after configuration is complete. It can toggle high or low if required. • Removed "Remote update only in AS mode" specification in Table 58.

continued...

Date	Version	Changes
		• Added DCLK device initialization clock source specification in Table 60. • Added description in "Configuration Files" section: The IOCSR `.rbf` size is specifically for the Configuration via Protocol (CvP) feature. • Removed $f_{MAX_RU_CLK}$ specification in Table 63.
February 2014	3.7	• Updated $V_{CCRSTCLK_HPS}$ maximum specification in Table 1. • Added $V_{CC_AUX_SHARED}$ specification in Table 1.
December 2013	3.6	• Added "HPS PLL Specifications". • Added Table 24, Table 39, and Table 40. • Updated Table 1, Table 3, Table 5, Table 19, Table 20, Table 21, Table 38, Table 41, Table 42, Table 43, Table 44, Table 45, Table 46, Table 47, Table 48, Table 49, Table 50, Table 51, Table 55, Table 56, and Table 59. • Updated Figure 7, Figure 13, Figure 15, Figure 16, and Figure 19. • Removed table: GPIO Pulse Width for Arria V Devices.
August 2013	3.5	• Removed "Pending silicon characterization" note in Table 29. • Updated Table 25.
August 2013	3.4	• Removed Preliminary tags for Table 1, Table 2, Table 3, Table 4, Table 5, Table 6, Table 7, Table 9, Table 12, Table 13, Table 14, Table 15, Table 16, Table 17, Table 18, Table 19, Table 20, Table 21, Table 22, Table 23, Table 24, Table 25, Table 26, Table 27, Table 28, Table 29, Table 30, Table 31, Table 35, Table 36, Table 51, Table 53, Table 54, Table 55, Table 56, Table 57, Table 60, Table 62, and Table 64. • Updated Table 1, Table 3, Table 11, Table 19, Table 20, Table 21, Table 22, Table 25, and Table 29.
June 2013	3.3	Updated Table 20, Table 21, Table 25, and Table 38.
May 2013	3.2	• Added Table 37. • Updated Figure 8, Figure 9, Figure 20, Figure 22, and Figure 23. • Updated Table 1, Table 5, Table 10, Table 13, Table 19, Table 20, Table 21, Table 23, Table 29, Table 39, Table 40, Table 46, Table 56, Table 57, Table 60, and Table 64. • Updated industrial junction temperature range for –I3 speed grade in "PLL Specifications" section.
March 2013	3.1	• Added HPS reset information in the "HPS Specifications" section. • Added Table 60. • Updated Table 1, Table 3, Table 17, Table 20, Table 29, and Table 59. • Updated Figure 21.

continued...

Date	Version	Changes
November 2012	3.0	• Updated Table 2, Table 4, Table 9, Table 14, Table 16, Table 17, Table 20, Table 21, Table 25, Table 29, Table 36, Table 56, Table 57, and Table 60. • Removed table: Transceiver Block Jitter Specifications for Arria V Devices. • Added HPS information: ☐ Added "HPS Specifications" section. ☐ Added Table 38, Table 39, Table 40, Table 41, Table 42, Table 43, Table 44, Table 45, Table 46, Table 47, Table 48, Table 49, and Table 50. ☐ Added Figure 7, Figure 8, Figure 9, Figure 10, Figure 11, Figure 12, Figure 13, Figure 14, Figure 15, Figure 16, Figure 17, Figure 18, and Figure 19. ☐ Updated Table 3 and Table 5.
October 2012	2.4	• Updated Arria V GX $V_{CCR_GXBL/R}$, $V_{CCT_GXBL/R}$, and $V_{CCL_GXBL/R}$ minimum and maximum values, and data rate in Table 4. • Added receiver V_{ICM} (AC coupled) and V_{ICM} (DC coupled) values, and transmitter V_{OCM} (AC coupled) and V_{OCM} (DC coupled) values in Table 20 and Table 21.
August 2012	2.3	Updated the SERDES factor condition in Table 30.
July 2012	2.2	• Updated the maximum voltage for V_I (DC input voltage) in Table 1. • Updated Table 20 to include the Arria V GX -I3 speed grade. • Updated the minimum value of the fixedclk clock frequency in Table 20 and Table 21. • Updated the SERDES factor condition in Table 30. • Updated Table 50 to include the IOE programmable delay settings for the Arria V GX -I3 speed grade.
June 2012	2.1	Updated $V_{CCR_GXBL/R}$, $V_{CCT_GXBL/R}$, and $V_{CCL_GXBL/R}$ values in Table 4.
June 2012	2.0	• Updated for the Quartus II software v12.0 release: • Restructured document. • Updated "Supply Current and Power Consumption" section. • Updated Table 20, Table 21, Table 24, Table 25, Table 26, Table 35, Table 39, Table 43, and Table 52. • Added Table 22, Table 23, and Table 33. • Added Figure 1–1 and Figure 1–2. • Added "Initialization" and "Configuration Files" sections.
February 2012	1.3	• Updated Table 2–1. • Updated Transceiver-FPGA Fabric Interface rows in Table 2–20. • Updated V_{CCP} description.

continued...

Date	Version	Changes
December 2011	1.2	Updated Table 2–1 and Table 2–3.
November 2011	1.1	• Updated Table 2–1, Table 2–19, Table 2–26, and Table 2–36. • Added Table 2–5. • Added Figure 2–4.
August 2011	1.0	Initial release.

2. Arria V GZ Device Datasheet

This document covers the electrical and switching characteristics for Arria V GZ devices. Electrical characteristics include operating conditions and power consumption. Switching characteristics include transceiver specifications, core, and periphery performance. This document also describes I/O timing, including programmable I/O element (IOE) delay and programmable output buffer delay.

Related Information

Arria V Device Overview
For information regarding the densities and packages of devices in the Arria V GZ family.

2.1. Electrical Characteristics

2.1.1. Operating Conditions

When you use Arria V GZ devices, they are rated according to a set of defined parameters. To maintain the highest possible performance and reliability of Arria V GZ devices, you must consider the operating requirements described in this datasheet.

Arria V GZ devices are offered in commercial and industrial temperature grades.

Commercial devices are offered in –3 (fastest) and –4 core speed grades. Industrial devices are offered in –3L and –4 core speed grades. Arria V GZ devices are offered in –2 and –3 transceiver speed grades.

© Altera Corporation. Altera, the Altera logo, the 'a' logo, and other Altera marks are trademarks of Altera Corporation. Altera reserves the right to make changes to any products and services at any time without notice. Altera assumes no responsibility or liability arising out of the application or use of any information, product, or service described herein except as expressly agreed to in writing by Altera. Altera customers are advised to obtain the latest version of device specifications before relying on any published information and before placing orders for products or services.
*Other names and brands may be claimed as the property of others.

Table 79. Commercial and Industrial Speed Grade Offering for Arria V GZ Devices

C = Commercial temperature grade; I = Industrial temperature grade.

Lower number refers to faster speed grade.

L = Low power devices.

Transceiver Speed Grade	Core Speed Grade			
	C3	C4	I3L	I4
2	Yes	—	Yes	—
3	—	Yes	—	Yes

2.1.1.1. Absolute Maximum Ratings

Absolute maximum ratings define the maximum operating conditions for Arria V GZ devices. The values are based on experiments conducted with the devices and theoretical modeling of breakdown and damage mechanisms. The functional operation of the device is not implied for these conditions.

Caution: Conditions other than those listed in the following table may cause permanent damage to the device. Additionally, device operation at the absolute maximum ratings for extended periods of time may have adverse effects on the device.

Table 80. Absolute Maximum Ratings for Arria V GZ Devices

Symbol	Description	Minimum	Maximum	Unit
V_{CC}	Power supply for core voltage and periphery circuitry	–0.5	1.35	V
V_{CCPT}	Power supply for programmable power technology	–0.5	1.8	V
V_{CCPGM}	Power supply for configuration pins	–0.5	3.9	V
V_{CC_AUX}	Auxiliary supply for the programmable power technology	–0.5	3.4	V
V_{CCBAT}	Battery back-up power supply for design security volatile key register	–0.5	3.9	V
V_{CCPD}	I/O pre-driver power supply	–0.5	3.9	V
V_{CCIO}	I/O power supply	–0.5	3.9	V
V_{CCD_FPLL}	PLL digital power supply	–0.5	1.8	V

continued...

Symbol	Description	Minimum	Maximum	Unit
V_{CCA_FPLL}	PLL analog power supply	–0.5	3.4	V
V_I	DC input voltage	–0.5	3.8	V
T_J	Operating junction temperature	–55	125	°C
T_{STG}	Storage temperature (No bias)	–65	150	°C
I_{OUT}	DC output current per pin	–25	40	mA

Table 81. Transceiver Power Supply Absolute Conditions for Arria V GZ Devices

Symbol	Description	Minimum	Maximum	Unit
V_{CCA_GXBL}	Transceiver channel PLL power supply (left side)	–0.5	3.75	V
V_{CCA_GXBR}	Transceiver channel PLL power supply (right side)	–0.5	3.75	V
V_{CCHIP_L}	Transceiver hard IP power supply (left side)	–0.5	1.35	V
V_{CCHSSI_L}	Transceiver PCS power supply (left side)	–0.5	1.35	V
V_{CCHSSI_R}	Transceiver PCS power supply (right side)	–0.5	1.35	V
V_{CCR_GXBL}	Receiver analog power supply (left side)	–0.5	1.35	V
V_{CCR_GXBR}	Receiver analog power supply (right side)	–0.5	1.35	V
V_{CCT_GXBL}	Transmitter analog power supply (left side)	–0.5	1.35	V
V_{CCT_GXBR}	Transmitter analog power supply (right side)	–0.5	1.35	V
V_{CCH_GXBL}	Transmitter output buffer power supply (left side)	–0.5	1.8	V
V_{CCH_GXBR}	Transmitter output buffer power supply (right side)	–0.5	1.8	V

2.1.1.2. Maximum Allowed Overshoot and Undershoot Voltage

During transitions, input signals may overshoot to the voltage shown in the following table. They may also undershoot to –2.0 V for input currents less than 100 mA and periods shorter than 20 ns.

The maximum allowed overshoot duration is specified as a percentage of high time over the lifetime of the device. A DC signal is equivalent to 100% of the duty cycle.

For example, a signal that overshoots to 3.95 V can be at 3.95 V for only ~21% over the lifetime of the device; for a device lifetime of 10 years, the overshoot duration amounts to ~2 years.

Table 82. Maximum Allowed Overshoot During Transitions for Arria V GZ Devices

Symbol	Description	Condition (V)	Overshoot Duration as % @ T_J = 100°C	Unit
Vi (AC)	AC input voltage	3.8	100	%
		3.85	64	%
		3.9	36	%
		3.95	21	%
		4	12	%
		4.05	7	%
		4.1	4	%
		4.15	2	%
		4.2	1	%

For an overshoot of 3.8 V, the percentage of high time for the overshoot can be as high as 100% over a 10-year period. Percentage of high time is calculated as ([delta T]/T) × 100. This 10-year period assumes that the device is always turned on with 100% I/O toggle rate and 50% duty cycle signal.

Figure 22. Arria V GZ Devices Overshoot Duration

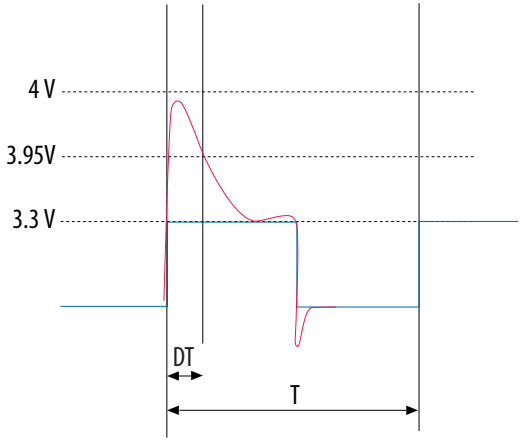

2.1.1.3. Recommended Operating Conditions

Table 83. Recommended Operating Conditions for Arria V GZ Devices

Power supply ramps must all be strictly monotonic, without plateaus.

Symbol	Description	Condition	Minimum(117)	Typical	Maximum (117)	Unit
V_{CC}	Core voltage and periphery circuitry power supply (118)	—	0.82	0.85	0.88	V
V_{CCPT}	Power supply for programmable power technology	—	1.45	1.50	1.55	V
V_{CC_AUX}	Auxiliary supply for the programmable power technology	—	2.375	2.5	2.625	V
V_{CCPD} (119)	I/O pre-driver (3.0 V) power supply	—	2.85	3.0	3.15	V

continued...

(117) The power supply value describes the budget for the DC (static) power supply tolerance and does not include the dynamic tolerance requirements. Refer to the PDN tool for the additional budget for the dynamic tolerance requirements.

(118) The V_{CC} core supply must be set to 0.9 V if the Partial Reconfiguration (PR) feature is used.

(119) V_{CCPD} must be 2.5 V when V_{CCIO} is 2.5, 1.8, 1.5, 1.35, 1.25 or 1.2 V. V_{CCPD} must be 3.0 V when V_{CCIO} is 3.0 V.

Symbol	Description	Condition	Minimum(117)	Typical	Maximum (117)	Unit
	I/O pre-driver (2.5 V) power supply	—	2.375	2.5	2.625	V
V_{CCIO}	I/O buffers (3.0 V) power supply	—	2.85	3.0	3.15	V
	I/O buffers (2.5 V) power supply	—	2.375	2.5	2.625	V
	I/O buffers (1.8 V) power supply	—	1.71	1.8	1.89	V
	I/O buffers (1.5 V) power supply	—	1.425	1.5	1.575	V
	I/O buffers (1.35 V) power supply	—	1.283	1.35	1.45	V
	I/O buffers (1.25 V) power supply	—	1.19	1.25	1.31	V
	I/O buffers (1.2 V) power supply	—	1.14	1.2	1.26	V
V_{CCPGM}	Configuration pins (3.0 V) power supply	—	2.85	3.0	3.15	V
	Configuration pins (2.5 V) power supply	—	2.375	2.5	2.625	V
	Configuration pins (1.8 V) power supply	—	1.71	1.8	1.89	V
V_{CCA_FPLL}	PLL analog voltage regulator power supply	—	2.375	2.5	2.625	V
V_{CCD_FPLL}	PLL digital voltage regulator power supply	—	1.45	1.5	1.55	V
V_{CCBAT} (120)	Battery back-up power supply (For design security volatile key register)	—	1.2	—	3.0	V
V_I	DC input voltage	—	–0.5	—	3.6	V
V_O	Output voltage	—	0	—	V_{CCIO}	V
T_J	Operating junction temperature	Commercial	0	—	85	°C
		Industrial	–40	—	100	°C
t_{RAMP}	Power supply ramp time	Standard POR	200 µs	—	100 ms	—
		Fast POR	200 µs	—	4 ms	—

(117) The power supply value describes the budget for the DC (static) power supply tolerance and does not include the dynamic tolerance requirements. Refer to the PDN tool for the additional budget for the dynamic tolerance requirements.

(120) If you do not use the design security feature in Arria V GZ devices, connect V_{CCBAT} to a 1.2- to 3.0-V power supply. Arria V GZ power-on-reset (POR) circuitry monitors V_{CCBAT}. Arria V GZ devices do not exit POR if V_{CCBAT} is not powered up.

2.1.1.3.1. Recommended Transceiver Power Supply Operating Conditions

Table 84. Recommended Transceiver Power Supply Operating Conditions for Arria V GZ Devices

Symbol	Description	Minimum (121)	Typical	Maximum(121)	Unit
V_{CCA_GXBL} (122), (123)	Transceiver channel PLL power supply (left side)	2.85	3.0	3.15	V
		2.375	2.5	2.625	
V_{CCA_GXBR} (122), (123)	Transceiver channel PLL power supply (right side)	2.85	3.0	3.15	V
		2.375	2.5	2.625	
V_{CCHIP_L}	Transceiver hard IP power supply (left side)	0.82	0.85	0.88	V
V_{CCHSSI_L}	Transceiver PCS power supply (left side)	0.82	0.85	0.88	V
V_{CCHSSI_R}	Transceiver PCS power supply (right side)	0.82	0.85	0.88	V
V_{CCR_GXBL} (124)	Receiver analog power supply (left side)	0.82	0.85	0.88	V
		0.97	1.0	1.03	
		1.03	1.05	1.07	
V_{CCR_GXBR} (124)	Receiver analog power supply (right side)	0.82	0.85	0.88	V
		0.97	1.0	1.03	
		1.03	1.05	1.07	
V_{CCT_GXBL} (124)	Transmitter analog power supply (left side)	0.82	0.85	0.88	V

continued...

(121) This value describes the budget for the DC (static) power supply tolerance and does not include the dynamic tolerance requirements. Refer to the PDN tool for the additional budget for the dynamic tolerance requirements.

(122) This supply must be connected to 3.0 V if the CMU PLL, receiver CDR, or both, are configured at a base data rate > 6.5 Gbps. Up to 6.5 Gbps, you can connect this supply to either 3.0 V or 2.5 V.

(123) When using ATX PLLs, the supply must be 3.0 V.

(124) This supply must be connected to 1.0 V if the transceiver is configured at a data rate > 6.5 Gbps, and to 1.05 V if configured at a data rate > 10.3 Gbps when DFE is used. For data rate up to 6.5 Gbps, you can connect this supply to 0.85 V.

Symbol	Description	Minimum (121)	Typical	Maximum(121)	Unit
		0.97	1.0	1.03	
		1.03	1.05	1.07	
V_{CCT_GXBR} (124)	Transmitter analog power supply (right side)	0.82	0.85	0.88	V
		0.97	1.0	1.03	
		1.03	1.05	1.07	
V_{CCH_GXBL}	Transmitter output buffer power supply (left side)	1.425	1.5	1.575	V
V_{CCH_GXBR}	Transmitter output buffer power supply (right side)	1.425	1.5	1.575	V

2.1.1.3.2. Transceiver Power Supply Requirements

Table 85. Transceiver Power Supply Voltage Requirements for Arria V GZ Devices

Conditions	VCCR_GXB and VCCT_GXB (125)	VCCA_GXB	VCCH_GXB	Unit
If BOTH of the following conditions are true: • Data rate > 10.3 Gbps. • DFE is used.	1.05	3.0	1.5	V
If ANY of the following conditions are true (126) : • ATX PLL is used. • Data rate > 6.5Gbps. • DFE (data rate ≤ 10.3 Gbps), AEQ, or EyeQ feature is used.	1.0			
If ALL of the following conditions are true: • ATX PLL is not used. • Data rate ≤ 6.5Gbps. • DFE, AEQ, and EyeQ are not used.	0.85	2.5		

(121) This value describes the budget for the DC (static) power supply tolerance and does not include the dynamic tolerance requirements. Refer to the PDN tool for the additional budget for the dynamic tolerance requirements.

(125) If the VCCR_GXB and VCCT_GXB supplies are set to 1.0 V or 1.05 V, they cannot be shared with the VCC core supply. If the VCCR_GXB and VCCT_GXB are set to 0.85 V, they can be shared with the VCC core supply.

(126) Choose this power supply voltage requirement option if you plan to upgrade your design later with any of the listed conditions.

2.1.1.4. DC Characteristics

2.1.1.4.1. Supply Current

Standby current is the current drawn from the respective power rails used for power budgeting.

Use the Excel-based Early Power Estimator (EPE) to get supply current estimates for your design because these currents vary greatly with the resources you use.

Related Information

- Early Power Estimator User Guide
  For more information about the EPE tool.
- Power Analysis chapter, Intel Quartus Prime Handbook
  For more information about power analysis.

2.1.1.4.2. Power Consumption

Intel offers two ways to estimate power consumption for a design—the Excel-based Early Power Estimator and the Intel Quartus Prime Power Analyzer feature.

Note: You typically use the interactive Excel-based EPE before designing the FPGA to get a magnitude estimate of the device power. The Intel Quartus Prime Power Analyzer provides better quality estimates based on the specifics of the design after you complete place-and-route. The Power Analyzer can apply a combination of user-entered, simulation-derived, and estimated signal activities that, when combined with detailed circuit models, yields very accurate power estimates.

Related Information

- Early Power Estimator User Guide
  For more information about the EPE tool.
- Power Analysis chapter, Intel Quartus Prime Handbook
  For more information about power analysis.

2.1.1.4.3. I/O Pin Leakage Current

Table 86. I/O Pin Leakage Current for Arria V GZ Devices

If $V_O = V_{CCIO}$ to $V_{CCIOMax}$, 100 µA of leakage current per I/O is expected.

Symbol	Description	Conditions	Min	Typ	Max	Unit
I_I	Input pin	V_I = 0 V to $V_{CCIOMAX}$	–30	—	30	µA
I_{OZ}	Tri-stated I/O pin	V_O = 0 V to $V_{CCIOMAX}$	–30	—	30	µA

2.1.1.4.4. Bus Hold Specifications

Table 87. Bus Hold Parameters for Arria V GZ Devices

Parameter	Symbol	Conditions	V_{CCIO}										Unit
			1.2 V		1.5 V		1.8 V		2.5 V		3.0 V		
			Min	Max	Min	Max	Min	Max	Min	Max	Min	Max	
Low sustaining current	I_{SUSL}	$V_{IN} > V_{IL}$ (maximum)	22.5	—	25.0	—	30.0	—	50.0	—	70.0	—	µA
High sustaining current	I_{SUSH}	$V_{IN} < V_{IH}$ (minimum)	–22.5	—	–25.0	—	–30.0	—	–50.0	—	–70.0	—	µA
Low overdrive current	I_{ODL}	$0V < V_{IN} < V_{CCIO}$	—	120	—	160	—	200	—	300	—	500	µA
High overdrive current	I_{ODH}	$0V < V_{IN} < V_{CCIO}$	—	–120	—	–160	—	–200	—	–300	—	–500	µA
Bus-hold trip point	V_{TRIP}	—	0.45	0.95	0.50	1.00	0.68	1.07	0.70	1.70	0.80	2.00	V

2.1.1.4.5. On-Chip Termination (OCT) Specifications

If you enable OCT calibration, calibration is automatically performed at power-up for I/Os connected to the calibration block.

Table 88. OCT Calibration Accuracy Specifications for Arria V GZ Devices

OCT calibration accuracy is valid at the time of calibration only.

Symbol	Description	Conditions	Calibration Accuracy		Unit
			C3, I3L	C4, I4	
25-Ω R_S	Internal series termination with calibration (25-Ω setting)	V_{CCIO} = 3.0, 2.5, 1.8, 1.5, 1.2 V	±15	±15	%
50-Ω R_S	Internal series termination with calibration (50-Ω setting)	V_{CCIO} = 3.0, 2.5, 1.8, 1.5, 1.2 V	±15	±15	%
34-Ω and 40-Ω R_S	Internal series termination with calibration (34-Ω and 40-Ω setting)	V_{CCIO} = 1.5, 1.35, 1.25, 1.2 V	±15	±15	%
48-Ω, 60-Ω, 80-Ω, and 240-Ω R_S	Internal series termination with calibration (48-Ω, 60-Ω, 80-Ω, and 240-Ω setting)	V_{CCIO} = 1.2 V	±15	±15	%
50-Ω R_T	Internal parallel termination with calibration (50-Ω setting)	V_{CCIO} = 2.5, 1.8, 1.5, 1.2 V	–10 to +40	–10 to +40	%
20-Ω, 30-Ω, 40-Ω, 60-Ω, and 120-Ω R_T	Internal parallel termination with calibration (20-Ω , 30-Ω, 40-Ω, 60-Ω, and 120-Ω setting)	V_{CCIO} = 1.5, 1.35, 1.25 V	–10 to +40	–10 to +40	%
60-Ω and 120-Ω R_T	Internal parallel termination with calibration (60-Ω and 120-Ω setting)	V_{CCIO} = 1.2	–10 to +40	–10 to +40	%
25-Ω $R_{S_left_shift}$	Internal left shift series termination with calibration (25-Ω $R_{S_left_shift}$ setting)	V_{CCIO} = 3.0, 2.5, 1.8, 1.5, 1.2 V	±15	±15	%

Table 89. OCT Without Calibration Resistance Tolerance Specifications for Arria V GZ Devices

Symbol	Description	Conditions	Resistance Tolerance		Unit
			C3, I3L	C4, I4	
25-Ω R, 50-Ω R_S	Internal series termination without calibration (25-Ω setting)	V_{CCIO} = 3.0 and 2.5 V	±40	±40	%
25-Ω R_S	Internal series termination without calibration (25-Ω setting)	V_{CCIO} = 1.8 and 1.5 V	±40	±40	%
25-Ω R_S	Internal series termination without calibration (25-Ω setting)	V_{CCIO} = 1.2 V	±50	±50	%

continued...

Symbol	Description	Conditions	Resistance Tolerance		Unit
			C3, I3L	C4, I4	
50-Ω R_S	Internal series termination without calibration (50-Ω setting)	V_{CCIO} = 1.8 and 1.5 V	±40	±40	%
50-Ω R_S	Internal series termination without calibration (50-Ω setting)	V_{CCIO} = 1.2 V	±50	±50	%
100-Ω R_D	Internal differential termination (100-Ω setting)	V_{CCIO} = 2.5 V	±25	±25	%

Figure 23. OCT Variation Without Re-Calibration for Arria V GZ Devices

$$R_{OCT} = R_{SCAL}\left(1 + \left(\frac{dR}{dT} \times \triangle T\right) \pm \left(\frac{dR}{dV} \times \triangle V\right)\right)$$

Notes:
1. The R_{OCT} value shows the range of OCT resistance with the variation of temperature and V_{CCIO}.
2. R_{SCAL} is the OCT resistance value at power-up.
3. ΔT is the variation of temperature with respect to the temperature at power-up.
4. ΔV is the variation of voltage with respect to the V_{CCIO} at power-up.
5. dR/dT is the percentage change of R_{SCAL} with temperature.
6. dR/dV is the percentage change of R_{SCAL} with voltage.

Table 90. OCT Variation after Power-Up Calibration for Arria V GZ Devices

Valid for a V_{CCIO} range of ±5% and a temperature range of 0° to 85°C.

Symbol	Description	V_{CCIO} (V)	Typical	Unit
dR/dV	OCT variation with voltage without re-calibration	3.0	0.0297	%/mV
		2.5	0.0344	
		1.8	0.0499	
		1.5	0.0744	
		1.2	0.1241	
dR/dT	OCT variation with temperature without re-calibration	3.0	0.189	%/°C

continued...

Symbol	Description	V_{CCIO} (V)	Typical	Unit
		2.5	0.208	
		1.8	0.266	
		1.5	0.273	
		1.2	0.317	

2.1.1.4.6. Pin Capacitance

Table 91. Pin Capacitance for Arria V GZ Devices

Symbol	Description	Maximum	Unit
C_{IOTB}	Input capacitance on the top and bottom I/O pins	6	pF
C_{IOLR}	Input capacitance on the left and right I/O pins	6	pF
C_{OUTFB}	Input capacitance on dual-purpose clock output and feedback pins	6	pF

2.1.1.4.7. Hot Socketing

Table 92. Hot Socketing Specifications for Arria V GZ Devices

Symbol	Description	Maximum
$I_{IOPIN\ (DC)}$	DC current per I/O pin	300 µA
$I_{IOPIN\ (AC)}$	AC current per I/O pin	8 mA (127)
$I_{XCVR\text{-}TX\ (DC)}$	DC current per transceiver transmitter pin	100 mA
$I_{XCVR\text{-}RX\ (DC)}$	DC current per transceiver receiver pin	50 mA

(127) The I/O ramp rate is 10 ns or more. For ramp rates faster than 10 ns, $|I_{IOPIN}|$ = C dv/dt, in which C is the I/O pin capacitance and dv/dt is the slew rate.

2.1.1.4.8. Internal Weak Pull-Up Resistor

Table 93. Internal Weak Pull-Up Resistor for Arria V GZ Devices

All I/O pins have an option to enable the weak pull-up resistor except the configuration, test, and JTAG pins. The internal weak pull-down feature is only available for the JTAG TCK pin. The typical value for this internal weak pull-down resistor is approximately 25 kΩ.

Symbol	Description	V_{CCIO} Conditions (V) (128)	Value (129)	Unit
R_{PU}	Value of the I/O pin pull-up resistor before and during configuration, as well as user mode if you enable the programmable pull-up resistor option.	3.0 ±5%	25	k Ω
		2.5 ±5%	25	k Ω
		1.8 ±5%	25	k Ω
		1.5 ±5%	25	kΩ
		1.35 ±5%	25	k Ω
		1.25 ±5%	25	k Ω
		1.2 ±5%	25	k Ω

2.1.1.5. I/O Standard Specifications

The V_{OL} and V_{OH} values are valid at the corresponding I_{OH} and I_{OL}, respectively.

Table 94. Single-Ended I/O Standards for Arria V GZ Devices

I/O Standard	V_{CCIO} (V)			V_{IL} (V)		V_{IH} (V)		V_{OL} (V)	V_{OH} (V)	I_{OL} (mA)	I_{OH} (mA)
	Min	Typ	Max	Min	Max	Min	Max	Max	Min		
LVTTL	2.85	3	3.15	–0.3	0.8	1.7	3.6	0.4	2.4	2	–2
LVCMOS	2.85	3	3.15	–0.3	0.8	1.7	3.6	0.2	V_{CCIO} – 0.2	0.1	–0.1
2.5 V	2.375	2.5	2.625	–0.3	0.7	1.7	3.6	0.4	2	1	–1

continued...

(128) The pin pull-up resistance values may be lower if an external source drives the pin higher than V_{CCIO}.

(129) These specifications are valid with a ±10% tolerance to cover changes over PVT.

I/O Standard	V_{CCIO} (V)			V_{IL} (V)		V_{IH} (V)		V_{OL} (V)	V_{OH} (V)	I_{OL} (mA)	I_{OH} (mA)
	Min	Typ	Max	Min	Max	Min	Max	Max	Min		
1.8 V	1.71	1.8	1.89	–0.3	0.35 × V_{CCIO}	0.65 × V_{CCIO}	V_{CCIO} + 0.3	0.45	V_{CCIO} – 0.45	2	–2
1.5 V	1.425	1.5	1.575	–0.3	0.35 × V_{CCIO}	0.65 × V_{CCIO}	V_{CCIO} + 0.3	0.25 × V_{CCIO}	0.75 × V_{CCIO}	2	–2
1.2 V	1.14	1.2	1.26	–0.3	0.35 × V_{CCIO}	0.65 × V_{CCIO}	V_{CCIO} + 0.3	0.25 × V_{CCIO}	0.75 × V_{CCIO}	2	–2

Table 95. Single-Ended SSTL, HSTL, and HSUL I/O Reference Voltage Specifications for Arria V GZ Devices

I/O Standard	V_{CCIO} (V)			V_{REF} (V)			V_{TT} (V)		
	Min	Typ	Max	Min	Typ	Max	Min	Typ	Max
SSTL-2 Class I, II	2.375	2.5	2.625	0.49 × V_{CCIO}	0.5 × V_{CCIO}	0.51 × V_{CCIO}	V_{REF} – 0.04	V_{REF}	V_{REF} + 0.04
SSTL-18 Class I, II	1.71	1.8	1.89	0.833	0.9	0.969	V_{REF} – 0.04	V_{REF}	V_{REF} + 0.04
SSTL-15 Class I, II	1.425	1.5	1.575	0.49 × V_{CCIO}	0.5 × V_{CCIO}	0.51 × V_{CCIO}	0.49 × V_{CCIO}	0.5 × VCCIO	0.51 × V_{CCIO}
SSTL-135 Class I, II	1.283	1.35	1.418	0.49 × V_{CCIO}	0.5 × V_{CCIO}	0.51 × V_{CCIO}	0.49 × V_{CCIO}	0.5 × V_{CCIO}	0.51 × V_{CCIO}
SSTL-125 Class I, II	1.19	1.25	1.26	0.49 × V_{CCIO}	0.5 × V_{CCIO}	0.51 × V_{CCIO}	0.49 × V_{CCIO}	0.5 × VCCIO	0.51 × V_{CCIO}
SSTL-12 Class I, II	1.14	1.20	1.26	0.49 × V_{CCIO}	0.5 × V_{CCIO}	0.51 × V_{CCIO}	0.49 × V_{CCIO}	0.5 × VCCIO	0.51 × V_{CCIO}
HSTL-18 Class I, II	1.71	1.8	1.89	0.85	0.9	0.95	—	V_{CCIO}/2	—
HSTL-15 Class I, II	1.425	1.5	1.575	0.68	0.75	0.9	—	V_{CCIO}/2	—
HSTL-12 Class I, II	1.14	1.2	1.26	0.47 × V_{CCIO}	0.5 × V_{CCIO}	0.53 × V_{CCIO}	—	V_{CCIO}/2	—
HSUL-12	1.14	1.2	1.3	0.49 × V_{CCIO}	0.5 × V_{CCIO}	0.51 × V_{CCIO}	—	—	—

Table 96. Single-Ended SSTL, HSTL, and HSUL I/O Standards Signal Specifications for Arria V GZ Devices

I/O Standard	$V_{IL(DC)}$ (V)		$V_{IH(DC)}$ (V)		$V_{IL(AC)}$ (V)	$V_{IH(AC)}$ (V)	V_{OL} (V)	V_{OH} (V)	I_{ol} (mA)	I_{oh} (mA)
	Min	Max	Min	Max	Max	Min	Max	Min		
SSTL-2 Class I	–0.3	V_{REF} – 0.15	V_{REF} + 0.15	V_{CCIO} + 0.3	V_{REF} – 0.31	V_{REF} + 0.31	V_{TT} – 0.608	V_{TT} + 0.608	8.1	–8.1
SSTL-2 Class II	–0.3	V_{REF} – 0.15	V_{REF} + 0.15	V_{CCIO} + 0.3	V_{REF} – 0.31	V_{REF} + 0.31	V_{TT} – 0.81	V_{TT} + 0.81	16.2	–16.2
SSTL-18 Class I	–0.3	V_{REF} – 0.125	V_{REF} + 0.125	V_{CCIO} + 0.3	V_{REF} – 0.25	V_{REF} + 0.25	V_{TT} – 0.603	V_{TT} + 0.603	6.7	–6.7
SSTL-18 Class II	–0.3	V_{REF} – 0.125	V_{REF} + 0.125	V_{CCIO} + 0.3	V_{REF} – 0.25	V_{REF} + 0.25	0.28	V_{CCIO} – 0.28	13.4	–13.4
SSTL-15 Class I	—	V_{REF} – 0.1	V_{REF} + 0.1	—	V_{REF} – 0.175	V_{REF} + 0.175	0.2 × V_{CCIO}	0.8 × V_{CCIO}	8	–8
SSTL-15 Class II	—	V_{REF} – 0.1	V_{REF} + 0.1	—	V_{REF} – 0.175	V_{REF} + 0.175	0.2 × V_{CCIO}	0.8 × V_{CCIO}	16	–16
SSTL-135 Class I, II	—	V_{REF} – 0.09	V_{REF} + 0.09	—	V_{REF} – 0.16	V_{REF} + 0.16	0.2 * V_{CCIO}	0.8 * V_{CCIO}	—	—
SSTL-125 Class I, II	—	V_{REF} – 0.85	V_{REF} + 0.85	—	V_{REF} – 0.15	V_{REF} + 0.15	0.2 * V_{CCIO}	0.8 * V_{CCIO}	—	—
SSTL-12 Class I, II	—	V_{REF} – 0.1	V_{REF} + 0.1	—	V_{REF} – 0.15	V_{REF} + 0.15	0.2 * V_{CCIO}	0.8 * V_{CCIO}	—	—
HSTL-18 Class I	—	V_{REF} – 0.1	V_{REF} + 0.1	—	V_{REF} – 0.2	V_{REF} + 0.2	0.4	V_{CCIO} – 0.4	8	–8
HSTL-18 Class II	—	V_{REF} – 0.1	V_{REF} + 0.1	—	V_{REF} – 0.2	V_{REF} + 0.2	0.4	V_{CCIO} – 0.4	16	–16
HSTL-15 Class I	—	V_{REF} – 0.1	V_{REF} + 0.1	—	V_{REF} – 0.2	V_{REF} + 0.2	0.4	V_{CCIO} – 0.4	8	–8
HSTL-15 Class II	—	V_{REF} – 0.1	V_{REF} + 0.1	—	V_{REF} – 0.2	V_{REF} + 0.2	0.4	V_{CCIO} – 0.4	16	–16
HSTL-12 Class I	–0.15	V_{REF} – 0.08	V_{REF} + 0.08	V_{CCIO} + 0.15	V_{REF} – 0.15	V_{REF} + 0.15	0.25 × V_{CCIO}	0.75 × V_{CCIO}	8	–8
HSTL-12 Class II	–0.15	V_{REF} – 0.08	V_{REF} + 0.08	V_{CCIO} + 0.15	V_{REF} – 0.15	V_{REF} + 0.15	0.25 × V_{CCIO}	0.75 × V_{CCIO}	16	–16
HSUL-12	—	V_{REF} – 0.13	V_{REF} + 0.13	—	V_{REF} – 0.22	V_{REF} + 0.22	0.1 × V_{CCIO}	0.9 × V_{CCIO}	—	—

Table 97. Differential SSTL I/O Standards for Arria V GZ Devices

I/O Standard	V_{CCIO} (V)			$V_{SWING(DC)}$ (V)		$V_{X(AC)}$ (V)			$V_{SWING(AC)}$ (V)	
	Min	Typ	Max	Min	Max	Min	Typ	Max	Min	Max
SSTL-2 Class I, II	2.375	2.5	2.625	0.3	V_{CCIO} + 0.6	$V_{CCIO}/2$ – 0.2	—	$V_{CCIO}/2$ + 0.2	0.62	V_{CCIO} + 0.6
SSTL-18 Class I, II	1.71	1.8	1.89	0.25	V_{CCIO} + 0.6	$V_{CCIO}/2$ – 0.175	—	$V_{CCIO}/2$ + 0.175	0.5	V_{CCIO} + 0.6
SSTL-15 Class I, II	1.425	1.5	1.575	0.2	(130)	$V_{CCIO}/2$ – 0.15	—	$V_{CCIO}/2$ + 0.15	0.35	—
SSTL-135 Class I, II	1.283	1.35	1.45	0.2	(130)	$V_{CCIO}/2$ – 0.15	$V_{CCIO}/2$	$V_{CCIO}/2$ + 0.15	$2(V_{IH(AC)} - V_{REF})$	$2(V_{IL(AC)} - V_{REF})$
SSTL-125 Class I, II	1.19	1.25	1.31	0.18	(130)	$V_{CCIO}/2$ – 0.15	$V_{CCIO}/2$	$V_{CCIO}/2$ + 0.15	$2(V_{IH(AC)} - V_{REF})$	—
SSTL-12 Class I, II	1.14	1.2	1.26	0.18	—	V_{REF} –0.15	$V_{CCIO}/2$	V_{REF} + 0.15	–0.30	0.30

Table 98. Differential HSTL and HSUL I/O Standards for Arria V GZ Devices

I/O Standard	V_{CCIO} (V)			$V_{DIF(DC)}$ (V)		$V_{X(AC)}$ (V)			$V_{CM(DC)}$ (V)			$V_{DIF(AC)}$ (V)	
	Min	Typ	Max	Min	Max	Min	Typ	Max	Min	Typ	Max	Min	Max
HSTL-18 Class I, II	1.71	1.8	1.89	0.2	—	0.78	—	1.12	0.78	—	1.12	0.4	—
HSTL-15 Class I, II	1.425	1.5	1.575	0.2	—	0.68	—	0.9	0.68	—	0.9	0.4	—
HSTL-12 Class I, II	1.14	1.2	1.26	0.16	V_{CCIO} + 0.3	—	0.5 × V_{CCIO}	—	0.4 × V_{CCIO}	0.5 × V_{CCIO}	0.6 × V_{CCIO}	0.3	V_{CCIO} + 0.48
HSUL-12	1.14	1.2	1.3	0.26	0.26	0.5 × V_{CCIO} – 0.12	0.5 × V_{CCIO}	0.5 × V_{CCIO} + 0.12	0.4 × V_{CCIO}	0.5 × V_{CCIO}	0.6 × V_{CCIO}	0.44	0.44

(130) The maximum value for $V_{SWING(DC)}$ is not defined. However, each single-ended signal needs to be within the respective single-ended limits ($V_{IH(DC)}$ and $V_{IL(DC)}$).

Table 99. Differential I/O Standard Specifications for Arria V GZ Devices

I/O Standard	V_{CCIO} (V) (131)			V_{ID} (mV) (132)			$V_{ICM(DC)}$ (V)			V_{OD} (V) (133)			V_{OCM} (V) (133)		
	Min	Typ	Max	Min	Condition	Max	Min	Condition	Max	Min	Typ	Max	Min	Typ	Max
PCML	Transmitter, receiver, and input reference clock pins of the high-speed transceivers use the PCML I/O standard. For transmitter, receiver, and reference clock I/O pin specifications, refer to the "Transceiver Performance Specifications" section.														
2.5 V LVDS (134)	2.375	2.5	2.625	100	V_{CM} = 1.25 V	—	0.05	D_{MAX} ≤ 700 Mbps	1.8	0.247	—	0.6	1.125	1.25	1.375
						—	1.05	D_{MAX} > 700 Mbps	1.55	0.247	—	0.6	1.125	1.25	1.375
BLVDS (135)	2.375	2.5	2.625	100	—	—	—	—	—	—	—	—	—	—	—
RSDS (HIO) (136)	2.375	2.5	2.625	100	V_{CM} = 1.25 V	—	0.3	—	1.4	0.1	0.2	0.6	0.5	1.2	1.4
Mini-LVDS (HIO) (137)	2.375	2.5	2.625	200	—	600	0.4	—	1.325	0.25	—	0.6	1	1.2	1.4
LVPECL (138), (139)	—	—	—	300	—	—	0.6	D_{MAX} ≤ 700 Mbps	1.8	—	—	—	—	—	—
	—	—	—	300	—	—	1	D_{MAX} > 700 Mbps	1.6	—	—	—	—	—	—

(131) Differential inputs are powered by VCCPD which requires 2.5 V.

(132) The minimum VID value is applicable over the entire common mode range, VCM.

(133) RL range: 90 ≤ RL ≤ 110 Ω.

(134) For optimized LVDS receiver performance, the receiver voltage input range must be between 0.25 V to 1.6 V for data rates above 700 Mbps, and 0 V to 1.85 V for data rates below 700 Mbps.

(135) There are no fixed V_{ICM}, V_{OD}, and V_{OCM} specifications for BLVDS. They depend on the system topology.

(136) For optimized RSDS receiver performance, the receiver voltage input range must be between 0.25 V to 1.45 V.

(137) For optimized Mini-LVDS receiver performance, the receiver voltage input range must be between 0.3 V to 1.425 V.

(138) LVPECL is only supported on dedicated clock input pins.

Related Information

Glossary on page 170

2.2. Switching Characteristics

2.2.1. Transceiver Performance Specifications

2.2.1.1. Reference Clock

Table 100. Reference Clock Specifications for Arria V GZ Devices

Speed grades shown refer to the PMA Speed Grade in the device ordering code. The maximum data rate could be restricted by the Core/PCS speed grade. Contact your Intel Sales Representative for the maximum data rate specifications in each speed grade combination offered. For more information about device ordering codes, refer to the *Arria V Device Overview*.

Symbol/Description	Conditions	Transceiver Speed Grade 2			Transceiver Speed Grade 3			Unit
		Min	Typ	Max	Min	Typ	Max	
Reference Clock								
Supported I/O Standards	Dedicated reference clock pin	1.2-V PCML, 1.4-V PCML, 1.5-V PCML, 2.5-V PCML, Differential LVPECL, LVDS, and HCSL						
	RX reference clock pin	1.4-V PCML, 1.5-V PCML, 2.5-V PCML, LVPECL, and LVDS						
Input Reference Clock Frequency (CMU PLL) (140)	—	40	—	710	40	—	710	MHz
Input Reference Clock Frequency (ATX PLL)(140)	—	100	—	710	100	—	710	MHz
Rise time	Measure at ±60 mV of differential signal (141)	—	—	400	—	—	400	ps

continued...

(139) For optimized LVPECL receiver performance, the receiver voltage input range must be between 0.85 V to 1.75 V for data rate above 700 Mbps and 0.45 V to 1.95 V for data rate below 700 Mbps.

(140) The input reference clock frequency options depend on the data rate and the device speed grade.

(141) `REFCLK` performance requires to meet transmitter `REFCLK` phase noise specification.

Symbol/Description	Conditions	Transceiver Speed Grade 2			Transceiver Speed Grade 3			Unit
		Min	Typ	Max	Min	Typ	Max	
Fall time	Measure at ±60 mV of differential signal (141)	—	—	400	—	—	400	
Duty cycle	—	45	—	55	45	—	55	%
Spread-spectrum modulating clock frequency	PCI Express (PCIe)	30	—	33	30	—	33	kHz
Spread-spectrum downspread	PCIe	—	0 to –0.5	—	—	0 to –0.5	—	%
On-chip termination resistors	—	—	100	—	—	100	—	Ω
Absolute V_{MAX}	Dedicated reference clock pin	—	—	1.6	—	—	1.6	V
	RX reference clock pin	—	—	1.2	—	—	1.2	
Absolute V_{MIN}	—	–0.4	—	—	–0.4	—	—	V
Peak-to-peak differential input voltage	—	200	—	1600	200	—	1600	mV
V_{ICM} (AC coupled)	Dedicated reference clock pin	1000/900/850 (142)			1000/900/850 (142)			mV
	RX reference clock pin	1.0/0.9/0.85 (143)			1.0/0.9/0.85(143)			mV
V_{ICM} (DC coupled)	HCSL I/O standard for PCIe reference clock	250	—	550	250	—	550	mV
Transmitter REFCLK Phase Noise (622 MHz) (144)	100 Hz	—	—	-70	—	—	-70	dBc/Hz
	1 kHz	—	—	-90	—	—	-90	dBc/Hz
	10 kHz	—	—	-100	—	—	-100	dBc/Hz
	100 kHz	—	—	-110	—	—	-110	dBc/Hz

continued...

(142) The reference clock common mode voltage is equal to the V_{CCR_GXB} power supply level.

(143) This supply follows VCCR_GXB

(144) To calculate the REFCLK phase noise requirement at frequencies other than 622 MHz, use the following formula: REFCLK phase noise at f(MHz) = REFCLK phase noise at 622 MHz + 20*log(f/622).

Symbol/Description	Conditions	Transceiver Speed Grade 2			Transceiver Speed Grade 3			Unit
		Min	Typ	Max	Min	Typ	Max	
	≥1 MHz	—	—	-120	—	—	-120	dBc/Hz
Transmitter REFCLK Phase Jitter (100 MHz) (145)	10 kHz to 1.5 MHz (PCIe)	—	—	3	—	—	3	ps (rms)
R_{REF}	—	—	1800 ±1%	—	—	1800 ±1%	—	Ω

Related Information

Arria V Device Overview
For more information about device ordering codes.

2.2.1.2. Transceiver Clocks

Table 101. Transceiver Clocks Specifications for Arria V GZ Devices

Speed grades shown refer to the PMA Speed Grade in the device ordering code. The maximum data rate could be restricted by the Core/PCS speed grade. Contact your Intel Sales Representative for the maximum data rate specifications in each speed grade combination offered. For more information about device ordering codes, refer to the *Arria V Device Overview*.

Symbol/Description	Conditions	Transceiver Speed Grade 2			Transceiver Speed Grade 3			Unit
		Min	Typ	Max	Min	Typ	Max	
`fixedclk` clock frequency	PCIe Receiver Detect	—	100 or 125	—	—	100 or 125	—	MHz
Reconfiguration clock (`mgmt_clk_clk`) frequency	—	100	—	125	100	—	125	MHz

Related Information

Arria V Device Overview
For more information about device ordering codes.

(145) To calculate the REFCLK rms phase jitter requirement for PCIe at reference clock frequencies other than 100 MHz, use the following formula:
REFCLK rms phase jitter at f(MHz) = REFCLK rms phase jitter at 100 MHz × 100/f.

2.2.1.3. Receiver

Table 102. Receiver Specifications for Arria V GZ Devices

Speed grades shown refer to the PMA Speed Grade in the device ordering code. The maximum data rate could be restricted by the Core/PCS speed grade. Contact your Intel Sales Representative for the maximum data rate specifications in each speed grade combination offered. For more information about device ordering codes, refer to the *Arria V Device Overview*.

Symbol/Description	Conditions	Transceiver Speed Grade 2			Transceiver Speed Grade 3			Unit
		Min	Typ	Max	Min	Typ	Max	
Supported I/O Standards	1.4-V PCML, 1.5-V PCML, 2.5-V PCML, LVPECL, and LVDS							
Data rate (Standard PCS) (146), (147)	—	600	—	9900	600	—	8800	Mbps
Data rate (10G PCS) (146), (147)	—	600	—	12500	600	—	10312.5	Mbps
Absolute V_{MAX} for a receiver pin (148)	—	—	—	1.2	—	—	1.2	V
Absolute V_{MIN} for a receiver pin	—	–0.4	—	—	–0.4	—	—	V
Maximum peak-to-peak differential input voltage V_{ID} (diff p-p) before device configuration	—	—	—	1.6	—	—	1.6	V
Maximum peak-to-peak differential input voltage V_{ID} (diff p-p) after device configuration (149)	V_{CCR_GXB} = 1.0 V (V_{ICM} = 0.75 V)	—	—	1.8	—	—	1.8	V
	V_{CCR_GXB} = 0.85 V (V_{ICM} = 0.6 V)	—	—	2.4	—	—	2.4	V
Minimum differential eye opening at receiver serial input pins (150)(151)	—	85	—	—	85	—	—	mV

continued...

(146) The line data rate may be limited by PCS-FPGA interface speed grade.

(147) To support data rates lower than the minimum specification through oversampling, use the CDR in LTR mode only.

(148) The device cannot tolerate prolonged operation at this absolute maximum.

(149) The maximum peak to peak differential input voltage V_{ID} after device configuration is equal to 4 × (absolute V_{MAX} for receiver pin - V_{ICM}).

Symbol/Description	Conditions	Transceiver Speed Grade 2			Transceiver Speed Grade 3			Unit
		Min	Typ	Max	Min	Typ	Max	
Differential on-chip termination resistors	85−Ω setting	—	85 ± 30%	—	—	85 ± 30%	—	Ω
	100−Ω setting	—	100 ± 30%	—	—	100 ± 30%	—	Ω
	120−Ω setting	—	120 ± 30%	—	—	120 ± 30%	—	Ω
	150−Ω setting	—	150 ± 30%	—	—	150 ± 30%	—	Ω
V_{ICM} (AC and DC coupled)	V_{CCR_GXB} = 0.85 V full bandwidth	—	600	—	—	600	—	mV
	V_{CCR_GXB} = 0.85 V half bandwidth	—	600	—	—	600	—	mV
	V_{CCR_GXB} = 1.0 V full bandwidth	—	700	—	—	700	—	mV
	V_{CCR_GXB} = 1.0 V half bandwidth	—	700	—	—	700	—	mV
t_{LTR} (152)	—	—	—	10	—	—	10	µs
t_{LTD} (153)	—	4	—	—	4	—	—	µs
t_{LTD_manual} (154)	—	4	—	—	4	—	—	µs

continued...

(150) The differential eye opening specification at the receiver input pins assumes that **Receiver Equalization** is disabled. If you enable **Receiver Equalization**, the receiver circuitry can tolerate a lower minimum eye opening, depending on the equalization level.

(151) Minimum eye opening of 85 mV is only for the unstressed input eye condition.

(152) t_{LTR} is the time required for the receive CDR to lock to the input reference clock frequency after coming out of reset.

(153) t_{LTD} is time required for the receiver CDR to start recovering valid data after the `rx_is_lockedtodata` signal goes high.

(154) t_{LTD_manual} is the time required for the receiver CDR to start recovering valid data after the `rx_is_lockedtodata` signal goes high when the CDR is functioning in the manual mode.

Symbol/Description	Conditions	Transceiver Speed Grade 2			Transceiver Speed Grade 3			Unit
		Min	Typ	Max	Min	Typ	Max	
$t_{LTR_LTD_manual}$ (155)	—	15	—	—	15	—	—	µs
Programmable equalization (AC Gain)	Full bandwidth (6.25 GHz) Half bandwidth (3.125 GHz)	—	—	16	—	—	16	dB
Programmable DC gain	DC gain setting = 0	—	0	—	—	0	—	dB
	DC gain setting = 1	—	2	—	—	2	—	dB
	DC gain setting = 2	—	4	—	—	4	—	dB
	DC gain setting = 3	—	6	—	—	6	—	dB
	DC gain setting = 4	—	8	—	—	8	—	dB

Related Information

Arria V Device Overview
For more information about device ordering codes.

2.2.1.4. Transmitter

Table 103. Transmitter Specifications for Arria V GZ Devices

Speed grades shown refer to the PMA Speed Grade in the device ordering code. The maximum data rate could be restricted by the Core/PCS speed grade. Contact your Intel Sales Representative for the maximum data rate specifications in each speed grade combination offered. For more information about device ordering codes, refer to the *Arria V Device Overview*.

Symbol/Description	Conditions	Transceiver Speed Grade 2			Transceiver Speed Grade 3			Unit
		Min	Typ	Max	Min	Typ	Max	
Supported I/O Standards	1.4-V and 1.5-V PCML							
Data rate (Standard PCS)	—	600	—	9900	600	—	8800	Mbps
Data rate (10G PCS)	—	600	—	12500	600	—	10312.5	Mbps

continued...

(155) $t_{LTR_LTD_manual}$ is the time the receiver CDR must be kept in lock to reference (LTR) mode after the `rx_is_lockedtoref` signal goes high when the CDR is functioning in the manual mode.

Symbol/Description	Conditions	Transceiver Speed Grade 2			Transceiver Speed Grade 3			Unit
		Min	Typ	Max	Min	Typ	Max	
Differential on-chip termination resistors	85-Ω setting	—	85 ± 20%	—	—	85 ± 20%	—	Ω
	100-Ω setting	—	100 ± 20%	—	—	100 ± 20%	—	Ω
	120-Ω setting	—	120 ± 20%	—	—	120 ± 20%	—	Ω
	150-Ω setting	—	150 ± 20%	—	—	150 ± 20%	—	Ω
V_{OCM} (AC coupled)	0.65-V setting	—	650	—	—	650	—	mV
V_{OCM} (DC coupled)	—	—	650	—	—	650	—	mV
Intra-differential pair skew	Tx V_{CM} = 0.5 V and slew rate of 15 ps	—	—	15	—	—	15	ps
Intra-transceiver block transmitter channel-to-channel skew	x6 PMA bonded mode	—	—	120	—	—	120	ps
Inter-transceiver block transmitter channel-to-channel skew	xN PMA bonded mode	—	—	500	—	—	500	ps

Related Information

Arria V Device Overview
For more information about device ordering codes.

2.2.1.5. CMU PLL

Table 104. CMU PLL Specifications for Arria V GZ Devices

Speed grades shown refer to the PMA Speed Grade in the device ordering code. The maximum data rate could be restricted by the Core/PCS speed grade. Contact your Intel Sales Representative for the maximum data rate specifications in each speed grade combination offered. For more information about device ordering codes, refer to the *Arria V Device Overview*.

Symbol/Description	Conditions	Transceiver Speed Grade 2			Transceiver Speed Grade 3			Unit
		Min	Typ	Max	Min	Typ	Max	
Supported data range	—	600	—	12500	600	—	10312.5	Mbps
$t_{pll_powerdown}$ (156)	—	1	—	—	1	—	—	µs
t_{pll_lock} (157)	—		—	10	—	—	10	µs

Related Information

Arria V Device Overview
For more information about device ordering codes.

2.2.1.6. ATX PLL

Table 105. ATX PLL Specifications for Arria V GZ Devices

Speed grades shown refer to the PMA Speed Grade in the device ordering code. The maximum data rate could be restricted by the Core/PCS speed grade. Contact your Intel Sales Representative for the maximum data rate specifications in each speed grade combination offered. For more information about device ordering codes, refer to the *Arria V Device Overview*.

Symbol/Description	Conditions	Transceiver Speed Grade 2			Transceiver Speed Grade 3			Unit
		Min	Typ	Max	Min	Typ	Max	
Supported data rate range	VCO post-divider L = 2	8000	—	12500	8000	—	10312.5	Mbps
	L = 4	4000	—	6600	4000	—	6600	Mbps

continued...

(156) $t_{pll_powerdown}$ is the PLL powerdown minimum pulse width.

(157) t_{pll_lock} is the time required for the transmitter CMU/ATX PLL to lock to the input reference clock frequency after coming out of reset.

Symbol/Description	Conditions	Transceiver Speed Grade 2			Transceiver Speed Grade 3			Unit
		Min	Typ	Max	Min	Typ	Max	
	L = 8 (158)	2000	—	3300	2000	—	3300	Mbps
$t_{pll_powerdown}$ (159)	—	1	—	—	1	—	—	µs
t_{pll_lock} (160)	—	—	—	10	—	—	10	µs

Related Information

- Arria V Device Overview
  For more information about device ordering codes.
- Transceiver Clocking in Arria V Devices
  For more information about clocking ATX PLLs.
- Dynamic Reconfiguration in Arria V Devices
  For more information about reconfiguring ATX PLLs.

(158) This clock can be further divided by central or local clock dividers making it possible to use ATX PLL for data rates < 1 Gbps. For more information about ATX PLLs, refer to the Transceiver Clocking in Arria V Devices chapter and the Dynamic Reconfiguration in Arria V Devices chapter.

(159) $t_{pll_powerdown}$ is the PLL powerdown minimum pulse width.

(160) t_{pll_lock} is the time required for the transmitter CMU/ATX PLL to lock to the input reference clock frequency after coming out of reset.

2.2.1.7. Fractional PLL

Table 106. Fractional PLL Specifications for Arria V GZ Devices

Speed grades shown refer to the PMA Speed Grade in the device ordering code. The maximum data rate could be restricted by the Core/PCS speed grade. Contact your Intel Sales Representative for the maximum data rate specifications in each speed grade combination offered. For more information about device ordering codes, refer to the *Arria V Device Overview*.

Symbol/Description	Conditions	Transceiver Speed Grade 2			Transceiver Speed Grade 3			Unit
		Min	Typ	Max	Min	Typ	Max	
Supported data range	—	600	—	3250/ 3125(161)	600	—	3250/ 3125 (161)	Mbps
$t_{pll_powerdown}$(162)	—	1	—	—	1	—	—	µs
t_{pll_lock} (163)	—	—	—	10		—	10	µs

Related Information

Arria V Device Overview
For more information about device ordering codes.

(161) When you use fPLL as a TXPLL of the transceiver.

(162) $t_{pll_powerdown}$ is the PLL powerdown minimum pulse width.

(163) t_{pll_lock} is the time required for the transmitter CMU/ATX PLL to lock to the input reference clock frequency after coming out of reset.

2.2.1.8. Clock Network Data Rate

Table 107. Clock Network Maximum Data Rate Transmitter Specifications

Valid data rates below the maximum specified in this table depend on the reference clock frequency and the PLL counter settings. Check the Parameter Editor message during the Arria V Transceiver Native PHY Intel FPGA IP core instantiation.

Clock Network	ATX PLL			CMU PLL (164)			fPLL		
	Non-bonded Mode (Gbps)	Bonded Mode (Gbps)	Channel Span	Non-bonded Mode (Gbps)	Bonded Mode (Gbps)	Channel Span	Non-bonded Mode (Gbps)	Bonded Mode (Gbps)	Channel Span
x1 (165)	12.5	—	6	12.5	—	6	3.125	—	3
x6 (165)	—	12.5	6	—	12.5	6	—	3.125	6
x6 PLL Feedback (166)	—	12.5	Side-wide	—	12.5	Side-wide	—	—	—
xN (PCIe)	—	8.0	8	—	5.0	8	—	—	—
xN (Arria V Transceiver Native PHY Intel FPGA IP core)	8.0	8.0	Up to 13 channels above and below PLL	7.99	7.99	Up to 13 channels above and below PLL	3.125	3.125	Up to 13 channels above and below PLL
	—	8.01 to 9.8304	Up to 7 channels above and below PLL						

(164) ATX PLL is recommended at 8 Gbps and above data rates for improved jitter performance.

(165) Channel span is within a transceiver bank.

(166) Side-wide channel bonding is allowed up to the maximum supported by the Arria V Transceiver Native PHY Intel FPGA IP core.

2.2.1.9. Standard PCS Data Rate

Table 108. Standard PCS Approximate Maximum Date Rate (Gbps) for Arria V GZ Devices

The maximum data rate is also constrained by the transceiver speed grade. Refer to the "Commercial and Industrial Speed Grade Offering for Arria V GZ Devices" table for the transceiver speed grade.

Mode (167)	Transceiver Speed Grade	PMA Width	20	20	16	16	10	10	8	8
		PCS/Core Width	40	20	32	16	20	10	16	8
FIFO	2	C3, I3L core speed grade	9.9	9	7.84	7.2	5.3	4.7	4.24	3.76
	3	C4, I4 core speed grade	8.8	8.2	7.2	6.56	4.8	4.3	3.84	3.44
Register	2	C3, I3L core speed grade	9.9	9	7.92	7.2	4.9	4.,5	3.92	3.6
	3	C4, I4 core speed grade	8.8	8.2	7.04	6.56	4.4	4.1	3.52	3.28

Related Information

Operating Conditions on page 101

(167) The Phase Compensation FIFO can be configured in FIFO mode or register mode. In the FIFO mode, the pointers are not fixed, and the latency can vary. In the register mode the pointers are fixed for low latency.

2.2.1.10. 10G PCS Data Rate

Table 109. 10G PCS Approximate Maximum Data Rate (Gbps) for Arria V GZ Devices

Mode (168)	Transceiver Speed Grade	PMA Width	64	40	40	40	32	32
		PCS Width	64	66/67	50	40	64/66/67	32
FIFO	2	C3, I3L core speed grade	12.5	12.5	10.69	12.5	10.88	10.88
	3	C4, I4 core speed grade	10.3125	10.3125	10.69	10.3125	9.92	9.92
Register	2	C3, I3L core speed grade	12.5	12.5	10.69	12.5	10.88	10.88
	3	C4, I4 core speed grade	10.3125	10.3125	10.69	10.3125	9.92	9.92

2.2.1.11. Typical VOD Settings

Table 110. Typical V_{OD} Setting for Arria V GZ Channel, TX Termination = 100 Ω

The tolerance is +/-20% for all VOD settings except for settings 2 and below.

Symbol	V_{OD} Setting	V_{OD} Value (mV)	V_{OD} Setting	V_{OD} Value (mV)
V_{OD} **differential peak to peak typical**	0 (169)	0	32	640
	1(169)	20	33	660
	2(169)	40	34	680
	3(169)	60	35	700
	4(169)	80	36	720
	5(169)	100	37	740
	6	120	38	760
	7	140	39	780

continued...

(168) The Phase Compensation FIFO can be configured in FIFO mode or register mode. In the FIFO mode, the pointers are not fixed, and the latency can vary. In the register mode the pointers are fixed for low latency.

(169) If TX termination resistance = 100 Ω,this VOD setting is illegal.

Symbol	V_{OD} Setting	V_{OD} Value (mV)	V_{OD} Setting	V_{OD} Value (mV)
	8	160	40	800
	9	180	41	820
	10	200	42	840
	11	220	43	860
	12	240	44	880
	13	260	45	900
	14	280	46	920
V_{OD} **differential peak to peak typical**	15	300	47	940
	16	320	48	960
	17	340	49	980
	18	360	50	1000
	19	380	51	1020
	20	400	52	1040
	21	420	53	1060
	22	440	54	1080
	23	460	55	1100
	24	480	56	1120
	25	500	57	1140
	26	520	58	1160
	27	540	59	1180
	28	560	60	1200
	29	580	61	1220
	30	600	62	1240
	31	620	63	1260

Figure 24. AC Gain Curves for Arria V GZ Channels (full bandwidth)

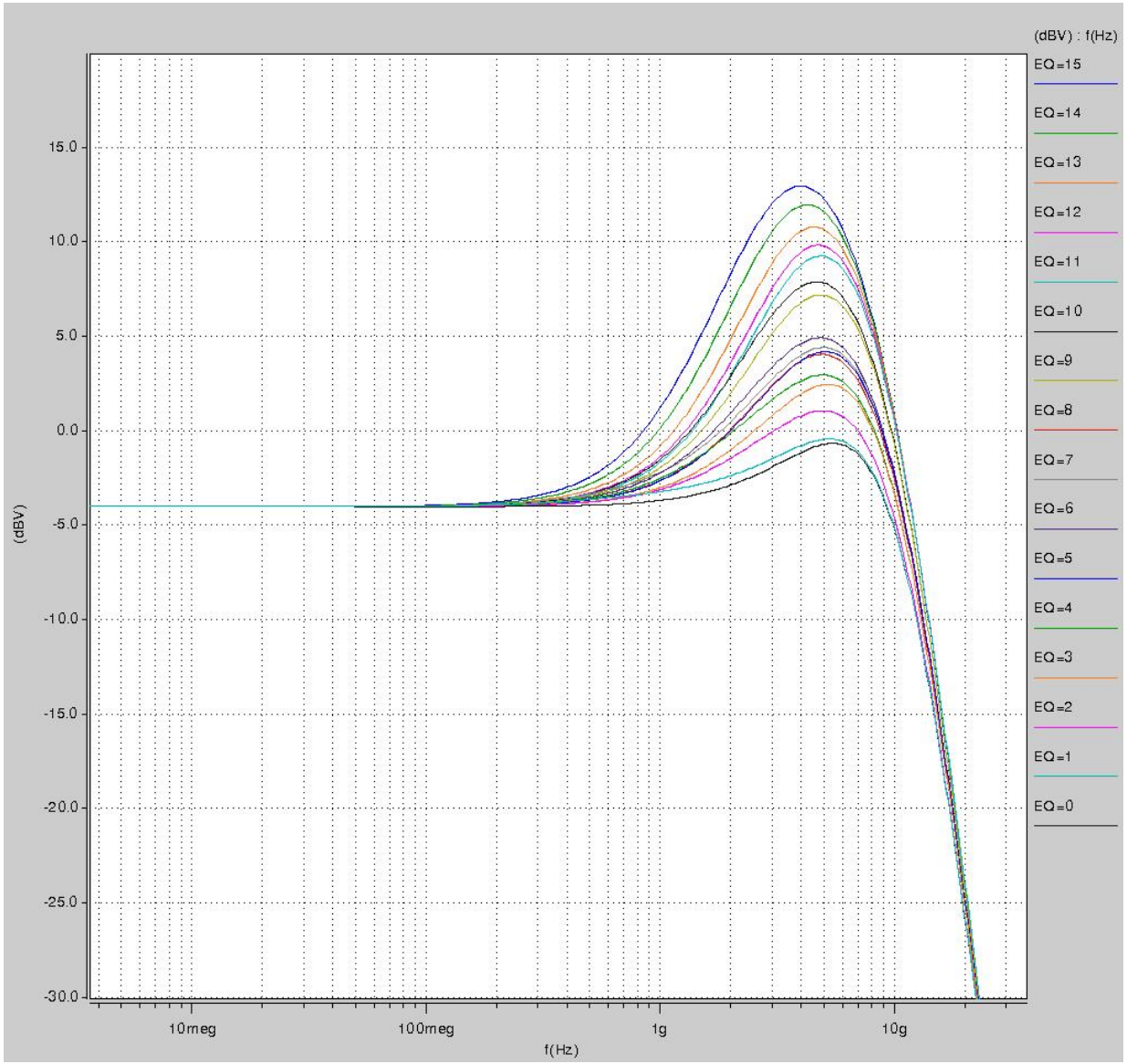

2.2.2. Core Performance Specifications

2.2.2.1. Clock Tree Specifications

Table 111. Clock Tree Performance for Arria V GZ Devices

Symbol	Performance		Unit
	C3, I3L	C4, I4	
Global and Regional Clock	650	580	MHz
Periphery Clock	500	500	MHz

2.2.2.2. PLL Specifications

Table 112. PLL Specifications for Arria V GZ Devices

Symbol	Parameter	Min	Typ	Max	Unit
f_{IN} (170)	Input clock frequency (C3, I3L speed grade)	5	—	800	MHz
	Input clock frequency (C4, I4 speed grade)	5	—	650	MHz
f_{INPFD}	Input frequency to the PFD	5	—	325	MHz
f_{FINPFD}	Fractional Input clock frequency to the PFD	50	—	160	MHz
f_{VCO} (171)	PLL VCO operating range (C3, I3L speed grade)	600	—	1600	MHz
	PLL VCO operating range (C4, I4 speed grade)	600	—	1300	MHz
$t_{EINDUTY}$	Input clock or external feedback clock input duty cycle	40	—	60	%

continued...

(170) This specification is limited in the Intel Quartus Prime software by the I/O maximum frequency. The maximum I/O frequency is different for each I/O standard.

(171) The VCO frequency reported by the Intel Quartus Prime software in the **PLL Usage Summary** section of the compilation report takes into consideration the VCO post divider value. Therefore, if the VCO post divider value is 2, the frequency reported can be lower than the f_{VCO} specification.

Symbol	Parameter	Min	Typ	Max	Unit
f_{OUT} (172)	Output frequency for an internal global or regional clock (C3, I3L speed grade)	—	—	650	MHz
	Output frequency for an internal global or regional clock (C4, I4 speed grade)	—	—	580	MHz
f_{OUT_EXT} (172)	Output frequency for an external clock output (C3, I3L speed grade)	—	—	667	MHz
	Output frequency for an external clock output (C4, I4 speed grade)	—	—	533	MHz
$t_{OUTDUTY}$	Duty cycle for a dedicated external clock output (when set to 50%)	45	50	55	%
t_{FCOMP}	External feedback clock compensation time	—	—	10	ns
$f_{DYCONFIGCLK}$	Dynamic configuration clock for `mgmt_clk` and `scanclk`	—	—	100	MHz
t_{LOCK}	Time required to lock from the end-of-device configuration or deassertion of `areset`	—	—	1	ms
t_{DLOCK}	Time required to lock dynamically (after switchover or reconfiguring any non-post-scale counters/delays)	—	—	1	ms
f_{CLBW}	PLL closed-loop low bandwidth	—	0.3	—	MHz
	PLL closed-loop medium bandwidth	—	1.5	—	MHz
	PLL closed-loop high bandwidth (173)	—	4	—	MHz
t_{PLL_PSERR}	Accuracy of PLL phase shift	—	—	±50	ps
t_{ARESET}	Minimum pulse width on the `areset` signal	10	—	—	ns
t_{INCCJ} (174), (175)	Input clock cycle-to-cycle jitter (f_{REF} ≥ 100 MHz)	—	—	0.15	UI (p-p)

continued...

(172) This specification is limited by the lower of the two: I/O f_{MAX} or f_{OUT} of the PLL.

(173) High bandwidth PLL settings are not supported in external feedback mode.

(174) A high input jitter directly affects the PLL output jitter. To have low PLL output clock jitter, you must provide a clean clock source with jitter < 120 ps.

Symbol	Parameter	Min	Typ	Max	Unit
	Input clock cycle-to-cycle jitter (f_{REF} < 100 MHz)	-750	—	+750	ps (p-p)
t_{OUTPJ_DC} (176)	Period Jitter for dedicated clock output in integer PLL (f_{OUT} ≥ 100 MHz)	—	—	175	ps (p-p)
	Period Jitter for dedicated clock output in integer PLL (f_{OUT} < 100 Mhz)	—	—	17.5	mUI (p-p)
t_{FOUTPJ_DC} (176)	Period Jitter for dedicated clock output in fractional PLL (f_{OUT} ≥ 100 MHz)	—	—	250(179), 175(177)	ps (p-p)
	Period Jitter for dedicated clock output in fractional PLL (f_{OUT} < 100 MHz)	—	—	25(179), 17.5 (177)	mUI (p-p)
t_{OUTCCJ_DC} (176)	Cycle-to-cycle Jitter for a dedicated clock output in integer PLL (f_{OUT} ≥ 100 MHz)	—	—	175	ps (p-p)
	Cycle-to-cycle Jitter for a dedicated clock output in integer PLL (f_{OUT} < 100 MHz)	—	—	17.5	mUI (p-p)
$t_{FOUTCCJ_DC}$ (176)	Cycle-to-cycle Jitter for a dedicated clock output in fractional PLL (f_{OUT} ≥ 100 MHz)	—	—	250(179), 175 (177)	ps (p-p)
	Cycle-to-cycle Jitter for a dedicated clock output in fractional PLL (f_{OUT} < 100 MHz)	—	—	25(179), 17.5 (177)	mUI (p-p)
t_{OUTPJ_IO}, (176), (178)	Period Jitter for a clock output on a regular I/O in integer PLL (f_{OUT} ≥ 100 MHz)	—	—	600	ps (p-p)
	Period Jitter for a clock output on a regular I/O in integer PLL (f_{OUT} < 100 MHz)	—	—	60	mUI (p-p)

continued...

(175) The f_{REF} is f_{IN}/N specification applies when N = 1.

(176) Peak-to-peak jitter with a probability level of 10^{-12} (14 sigma, 99.99999999974404% confidence level). The output jitter specification applies to the intrinsic jitter of the PLL, when an input jitter of 30 ps is applied. The external memory interface clock output jitter specifications use a different measurement method and are available in the *Worst-Case DCD on Arria V GZ I/O Pins* table.

(177) This specification only covered fractional PLL for low bandwidth. The f_{VCO} for fractional value range 0.20–0.80 must be ≥ 1200 MHz.

(178) The external memory interface clock output jitter specifications use a different measurement method, which is available in the *Memory Output Clock Jitter Specification for Arria V GZ Devices* table.

Symbol	Parameter	Min	Typ	Max	Unit
t_{FOUTPJ_IO} (176), (178), (179)	Period Jitter for a clock output on a regular I/O in fractional PLL ($f_{OUT} \geq 100$ MHz)	—	—	600	ps (p-p)
	Period Jitter for a clock output on a regular I/O in fractional PLL ($f_{OUT} < 100$ MHz)	—	—	60	mUI (p-p)
t_{OUTCCJ_IO} (176), (178)	Cycle-to-cycle Jitter for a clock output on a regular I/O in integer PLL ($f_{OUT} \geq 100$ MHz)	—	—	600	ps (p-p)
	Cycle-to-cycle Jitter for a clock output on a regular I/O in integer PLL ($f_{OUT} < 100$ MHz)	—	—	60	mUI (p-p)
$t_{FOUTCCJ_IO}$ (176), (178), (179)	Cycle-to-cycle Jitter for a clock output on a regular I/O in fractional PLL ($f_{OUT} \geq 100$ MHz)	—	—	600	ps (p-p)
	Cycle-to-cycle Jitter for a clock output on a regular I/O in fractional PLL ($f_{OUT} < 100$ MHz)	—	—	60	mUI (p-p)
$t_{CASC_OUTPJ_DC}$ (176), (180)	Period Jitter for a dedicated clock output in cascaded PLLs ($f_{OUT} \geq 100$ MHz)	—	—	175	ps (p-p)
	Period Jitter for a dedicated clock output in cascaded PLLS ($f_{OUT} < 100$ MHz)	—	—	17.5	mUI (p-p)
dK_{BIT}	Bit number of Delta Sigma Modulator (DSM)	8	24	32	Bits
k_{VALUE}	Numerator of Fraction	128	8388608	2147483648	—
f_{RES}	Resolution of VCO frequency (f_{INPFD} = 100 MHz)	390625	5.96	0.023	Hz

Related Information

- Duty Cycle Distortion (DCD) Specifications on page 151
- DLL Range Specifications on page 149

(179) This specification only covered fractional PLL for low bandwidth. The f_{VCO} for fractional value range 0.05–0.95 must be ≥ 1000 MHz.

(180) The cascaded PLL specification is only applicable with the following condition:
a. Upstream PLL: 0.59Mhz ≤ Upstream PLL BW < 1 MHz
b. Downstream PLL: Downstream PLL BW > 2 MHz

2.2.2.3. DSP Block Specifications

Table 113. DSP Block Performance Specifications for Arria V GZ Devices

Mode	Performance			Unit
	C3, I3L	C4	I4	
Modes using One DSP Block				
Three 9 × 9	480	420		MHz
One 18 × 18	480	420	400	MHz
Two partial 18 × 18 (or 16 × 16)	480	420	400	MHz
One 27 × 27	400	350		MHz
One 36 × 18	400	350		MHz
One sum of two 18 × 18 (One sum of two 16 × 16)	400	350		MHz
One sum of square	400	350		MHz
One 18 × 18 plus 36 (a × b) + c	400	350		MHz
Modes using Two DSP Blocks				
Three 18 × 18	400	350		MHz
One sum of four 18 × 18	380	300		MHz
One sum of two 27 × 27	380	300	290	MHz
One sum of two 36 × 18	380	300		MHz
One complex 18 × 18	400	350		MHz
One 36 × 36	380	300		MHz
Modes using Three DSP Blocks				
One complex 18 × 25	340	275	265	MHz
Modes using Four DSP Blocks				
One complex 27 × 27	350	310		MHz

2.2.2.4. Memory Block Specifications

Table 114. Memory Block Performance Specifications for Arria V GZ Devices

To achieve the maximum memory block performance, use a memory block clock that comes through global clock routing from an on-chip PLL set to **50%** output duty cycle. Use the Intel Quartus Prime software to report timing for this and other memory block clocking schemes.

When you use the error detection cyclical redundancy check (CRC) feature, there is no degradation in F_{MAX}.

Memory	Mode	Resources Used		Performance				Unit
		ALUTs	Memory	C3	C4	I3L	I4	
MLAB	Single port, all supported widths	0	1	400	315	400	315	MHz
	Simple dual-port, x32/x64 depth	0	1	400	315	400	315	MHz
	Simple dual-port, x16 depth (181)	0	1	533	400	533	400	MHz
	ROM, all supported widths	0	1	500	450	500	450	MHz
M20K Block	Single-port, all supported widths	0	1	650	550	500	450	MHz
	Simple dual-port, all supported widths	0	1	650	550	500	450	MHz
	Simple dual-port with the read-during-write option set to **Old Data**, all supported widths	0	1	455	400	455	400	MHz
	Simple dual-port with ECC enabled, 512 × 32	0	1	400	350	400	350	MHz
	Simple dual-port with ECC and optional pipeline registers enabled, 512 × 32	0	1	500	450	500	450	MHz
	True dual port, all supported widths	0	1	650	550	500	450	MHz
	ROM, all supported widths	0	1	650	550	500	450	MHz

(181) The F_{MAX} specification is only achievable with Fitter options, **MLAB Implementation In 16-Bit Deep Mode** enabled.

2.2.2.5. Temperature Sensing Diode Specifications

Table 115. Internal Temperature Sensing Diode Specification for Arria V GZ Devices

Temperature Range	Accuracy	Offset Calibrated Option	Sampling Rate	Conversion Time(182)	Resolution	Minimum Resolution with no Missing Codes
–40°C to 100°C	±8°C	No	1 MHz, 500 kHz	< 100 ms	8 bits	8 bits

Table 116. External Temperature Sensing Diode Specifications for Arria V GZ Devices

Description	Min	Typ	Max	Unit
I_{bias}, diode source current	8	—	200	µA
$V_{bias,}$ voltage across diode	0.3	—	0.9	V
Series resistance	—	—	< 1	Ω
Diode ideality factor	1.006	1.008	1.010	—

Related Information

Intel FPGA Temperature Sensor IP Core User Guide
Provides more information about the temperature sensing operation.

2.2.3. Periphery Performance

I/O performance supports several system interfaces, such as the **LVDS** high-speed I/O interface, external memory interface, and the **PCI/PCI-X** bus interface. General-purpose I/O standards such as 3.3-, 2.5-, 1.8-, and 1.5-**LVTTL/LVCMOS** are capable of a typical 167 MHz and 1.2-**LVCMOS** at 100 MHz interfacing frequency with a 10 pF load.

Note: The actual achievable frequency depends on design- and system-specific factors. Ensure proper timing closure in your design and perform HSPICE/IBIS simulations based on your specific design and system setup to determine the maximum achievable frequency in your system.

2.2.3.1. High-Speed I/O Specification

(182) For more details about the temperature sensing operations, refer to the *Intel FPGA Temperature Sensor IP Core User Guide*.

2.2.3.1.1. High-Speed Clock Specifications

Table 117. High-Speed Clock Specifications for Arria V GZ Devices

When J = 3 to 10, use the serializer/deserializer (SERDES) block.

When J = 1 or 2, bypass the SERDES block.

For LVDS applications, you must use the PLLs in integer PLL mode.

Arria V GZ devices support the following output standards using true LVDS output buffer types on all I/O banks.

- True RSDS output standard with data rates of up to 230 Mbps
- True mini-LVDS output standard with data rates of up to 340 Mbps

Symbol	Conditions	C3, I3L			C4, I4			Unit
		Min	Typ	Max	Min	Typ	Max	
f_{HSCLK_in} (input clock frequency) True Differential I/O Standards (183)	Clock boost factor W = 1 to 40 (184)	5	—	625	5	—	525	MHz
f_{HSCLK_in} (input clock frequency) Single Ended I/O Standards	Clock boost factor W = 1 to 40 (184)	5	—	625	5	—	525	MHz
f_{HSCLK_in} (input clock frequency) Single Ended I/O Standards	Clock boost factor W = 1 to 40 (184)	5	—	420	5	—	420	MHz
f_{HSCLK_OUT} (output clock frequency)	—	5	—	625 (185)	5	—	525 (185)	MHz

(183) This only applies to DPA and soft-CDR modes.

(184) Clock Boost Factor (W) is the ratio between the input data rate to the input clock rate.

(185) This is achieved by using the LVDS clock network.

2.2.3.1.2. Transmitter High-Speed I/O Specifications

Table 118. Transmitter High-Speed I/O Specifications for Arria V GZ Devices

When J = 3 to 10, use the serializer/deserializer (SERDES) block.

When J = 1 or 2, bypass the SERDES block.

Symbol	Conditions	C3, I3L			C4, I4			Unit
		Min	Typ	Max	Min	Typ	Max	
True Differential I/O Standards - f_{HSDR} (data rate)	SERDES factor J = 3 to 10 (186), (187)	(188)	—	1250	(188)	—	1050	Mbps
	SERDES factor J ≥ 4 LVDS TX with DPA (189), (190), (191), (192)	(188)	—	1600	(188)	—	1250	Mbps
	SERDES factor J = 2, uses DDR Registers	(188)	—	(193)	(188)	—	(193)	Mbps
	SERDES factor J = 1, uses SDR Register	(188)	—	(193)	(188)	—	(193)	Mbps

continued...

(186) If the receiver with DPA enabled and transmitter are using shared PLLs, the minimum data rate is 150 Mbps.

(187) The F_{MAX} specification is based on the fast clock used for serial data. The interface F_{MAX} is also dependent on the parallel clock domain which is design dependent and requires timing analysis.

(188) The minimum specification depends on the clock source (for example, the PLL and clock pin) and the clock routing resource (global, regional, or local) that you use. The I/O differential buffer and input register do not have a minimum toggle rate.

(189) Arria V GZ RX LVDS will need DPA. For Arria V GZ TX LVDS, the receiver side component must have DPA.

(190) Requires package skew compensation with PCB trace length.

(191) Do not mix single-ended I/O buffer within LVDS I/O bank.

(192) Chip-to-chip communication only with a maximum load of 5 pF.

(193) The maximum ideal data rate is the SERDES factor (J) x the PLL maximum output frequency (fOUT) provided you can close the design timing and the signal integrity simulation is clean.

Symbol	Conditions	C3, I3L			C4, I4			Unit
		Min	Typ	Max	Min	Typ	Max	
Emulated Differential I/O Standards with Three External Output Resistor Networks - f_{HSDR} (data rate) (194)	SERDES factor J = 4 to 10 (195)	(188)	—	840	(188)	—	840	Mbps
$t_{x\ Jitter}$ - True Differential I/O Standards	Total Jitter for Data Rate 600 Mbps - 1.25 Gbps	—	—	160	—	—	160	ps
	Total Jitter for Data Rate < 600 Mbps	—	—	0.1	—	—	0.1	UI
$t_{x\ Jitter}$ - Emulated Differential I/O Standards with Three External Output Resistor Network	Total Jitter for Data Rate 600 Mbps - 1.25 Gbps	—	—	300	—	—	325	ps
	Total Jitter for Data Rate < 600 Mbps	—	—	0.2	—	—	0.25	UI
t_{DUTY}	Transmitter output clock duty cycle for both True and Emulated Differential I/O Standards	45	50	55	45	50	55	%
t_{RISE} & t_{FALL}	True Differential I/O Standards	—	—	200	—	—	200	ps
	Emulated Differential I/O Standards with three external output resistor networks	—	—	250	—	—	300	ps
TCCS	True Differential I/O Standards	—	—	150	—	—	150	ps
	Emulated Differential I/O Standards	—	—	300	—	—	300	ps

(194) You must calculate the leftover timing margin in the receiver by performing link timing closure analysis. You must consider the board skew margin, transmitter channel-to-channel skew, and receiver sampling margin to determine leftover timing margin.

(195) When using True LVDS RX channels for emulated LVDS TX channel, only serialization factors 1 and 2 are supported.

2.2.3.1.3. Receiver High-Speed I/O Specifications

Table 119. Receiver High-Speed I/O Specifications for Arria V GZ Devices

When J = 3 to 10, use the serializer/deserializer (SERDES) block.

When J = 1 or 2, bypass the SERDES block.

Symbol	Conditions	C3, I3L			C4, I4			Unit
		Min	Typ	Max	Min	Typ	Max	
True Differential I/O Standards - $f_{HSDRDPA}$ (data rate)	SERDES factor J = 3 to 10 (196), (197), (198), (199), (200), (201)	150	—	1250	150	—	1050	Mbps
	SERDES factor J ≥ 4 LVDS RX with DPA (197), (199), (200), (201)	150	—	1600	150	—	1250	Mbps
	SERDES factor J = 2, uses DDR Registers	(202)	—	(203)	(202)	—	(203)	Mbps

continued...

(196) The F_{MAX} specification is based on the fast clock used for serial data. The interface F_{MAX} is also dependent on the parallel clock domain which is design dependent and requires timing analysis.

(197) Arria V GZ RX LVDS will need DPA. For Arria V GZ TX LVDS, the receiver side component must have DPA.

(198) Arria V GZ LVDS serialization and de-serialization factor needs to be x4 and above.

(199) Requires package skew compensation with PCB trace length.

(200) Do not mix single-ended I/O buffer within LVDS I/O bank.

(201) Chip-to-chip communication only with a maximum load of 5 pF.

(202) The minimum specification depends on the clock source (for example, the PLL and clock pin) and the clock routing resource (global, regional, or local) that you use. The I/O differential buffer and input register do not have a minimum toggle rate.

(203) The maximum ideal data rate is the SERDES factor (J) x the PLL maximum output frequency (fOUT) provided you can close the design timing and the signal integrity simulation is clean.

Symbol	Conditions	C3, I3L			C4, I4			Unit
		Min	Typ	Max	Min	Typ	Max	
	SERDES factor J = 1, uses SDR Register	(202)	—	(203)	(202)	—	(203)	Mbps
f_{HSDR} (data rate)	SERDES factor J = 3 to 10	(202)	—	(204)	(202)	—	(204)	Mbps
	SERDES factor J = 2, uses DDR Registers	(202)	—	(203)	(202)	—	(203)	Mbps
	SERDES factor J = 1, uses SDR Register	(202)	—	(203)	(202)	—	(203)	Mbps

2.2.3.1.4. DPA Mode High-Speed I/O Specifications

Table 120. High-Speed I/O Specifications for Arria V GZ Devices

When J = 3 to 10, use the serializer/deserializer (SERDES) block.

When J = 1 or 2, bypass the SERDES block.

Symbol	Conditions	C3, I3L			C4, I4			Unit
		Min	Typ	Max	Min	Typ	Max	
DPA run length	—	—	—	10000	—	—	10000	UI

Figure 25. DPA Lock Time Specification with DPA PLL Calibration Enabled

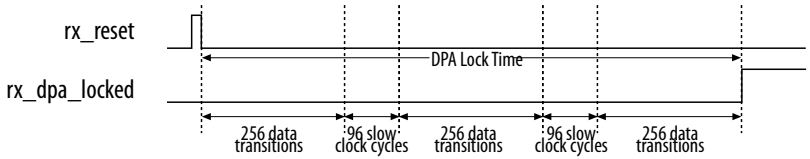

(204) You can estimate the achievable maximum data rate for non-DPA mode by performing link timing closure analysis. You must consider the board skew margin, transmitter delay margin, and receiver sampling margin to determine the maximum data rate supported.

Table 121. DPA Lock Time Specifications for Arria V GZ Devices

The DPA lock time is for one channel.

One data transition is defined as a 0-to-1 or 1-to-0 transition.

The DPA lock time stated in this table applies to both commercial and industrial grade.

Standard	Training Pattern	Number of Data Transitions in One Repetition of the Training Pattern	Number of Repetitions per 256 Data Transitions (205)	Maximum
SPI-4	00000000001111111111	2	128	640 data transitions
Parallel Rapid I/O	00001111	2	128	640 data transitions
	10010000	4	64	640 data transitions
Miscellaneous	10101010	8	32	640 data transitions
	01010101	8	32	640 data transitions

2.2.3.1.5. Soft CDR Mode High-Speed I/O Specifications

Table 122. High-Speed I/O Specifications for Arria V GZ Devices

When J = 3 to 10, use the serializer/deserializer (SERDES) block.

When J = 1 or 2, bypass the SERDES block.

Symbol	Conditions	C3, I3L			C4, I4			Unit
		Min	Typ	Max	Min	Typ	Max	
Soft-CDR ppm tolerance	—	—	—	300	—	—	300	± ppm

(205) This is the number of repetitions for the stated training pattern to achieve the 256 data transitions.

Figure 26. LVDS Soft-CDR/DPA Sinusoidal Jitter Tolerance Specification for a Data Rate ≥ 1.25 Gbps

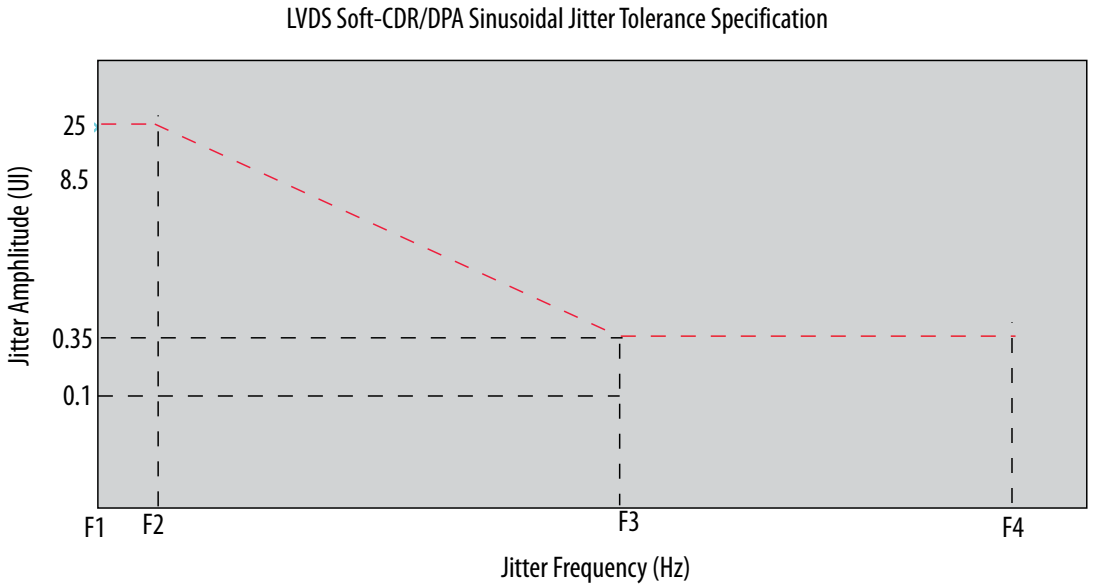

Table 123. LVDS Soft-CDR/DPA Sinusoidal Jitter Mask Values for a Data Rate ≥ 1.25 Gbps

Jitter Frequency (Hz)		Sinusoidal Jitter (UI)
F1	10,000	25.000
F2	17,565	25.000
F3	1,493,000	0.350
F4	50,000,000	0.350

Figure 27. LVDS Soft-CDR/DPA Sinusoidal Jitter Tolerance Specification for a Data Rate < 1.25 Gbps

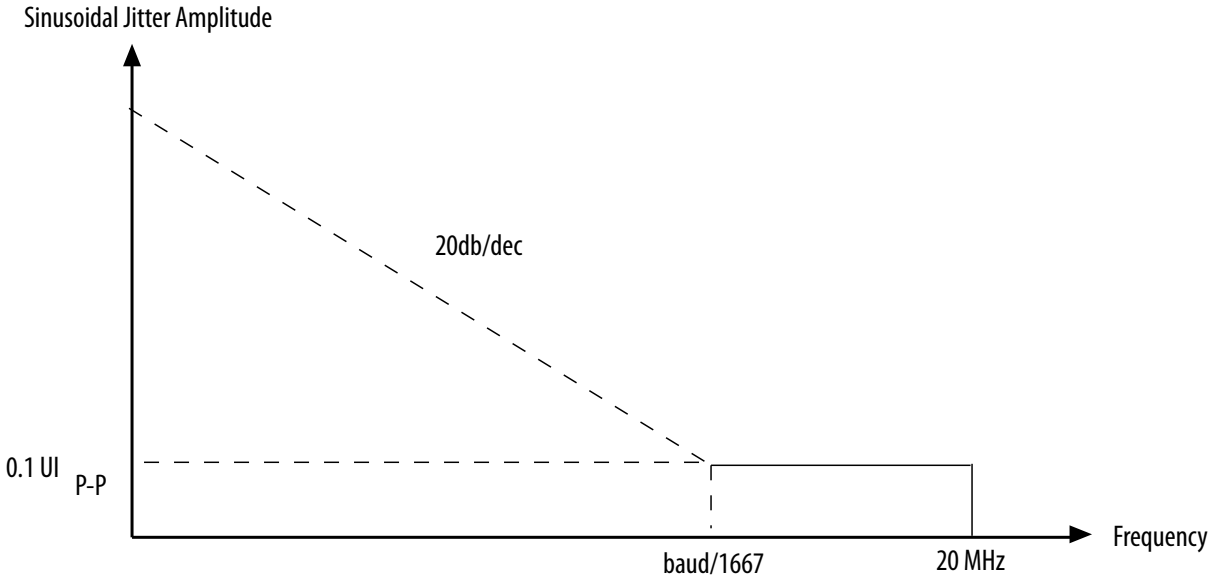

2.2.3.1.6. Non DPA Mode High-Speed I/O Specifications

Table 124. High-Speed I/O Specifications for Arria V GZ Devices

When J = 3 to 10, use the serializer/deserializer (SERDES) block.

When J = 1 or 2, bypass the SERDES block.

Symbol	Conditions	C3, I3L			C4, I4			Unit
		Min	Typ	Max	Min	Typ	Max	
Sampling Window	—	—	—	300	—	—	300	ps

2.2.3.2. DLL Range Specifications

Table 125. DLL Range Specifications for Arria V GZ Devices

Arria V GZ devices support memory interface frequencies lower than 300 MHz, although the reference clock that feeds the DLL must be at least 300 MHz. To support interfaces below 300 MHz, multiply the reference clock feeding the DLL to ensure the frequency is within the supported range of the DLL.

Parameter	C3, I3L	C4, I4	Unit
DLL operating frequency range	300 – 890	300 – 890	MHz

2.2.3.3. DQS Logic Block Specifications

Table 126. DQS Phase Offset Delay Per Setting for Arria V GZ Devices

The typical value equals the average of the minimum and maximum values.

The delay settings are linear with a cumulative delay variation of 40 ps for all speed grades. For example, when using a –3 speed grade and applying a 10-phase offset setting to a 90° phase shift at 400 MHz, the expected average cumulative delay is [625 ps + (10 × 11 ps) ± 20 ps] = 735 ps ± 20 ps.

Speed Grade	Min	Max	Unit
C3, I3L	8	15	ps
C4, I4	8	16	ps

Table 127. DQS Phase Shift Error Specification for DLL-Delayed Clock (t_{DQS_PSERR}) for Arria V GZ Devices

This error specification is the absolute maximum and minimum error. For example, skew on three DQS delay buffers in a –3 speed grade is ±84 ps or ±42 ps.

Number of DQS Delay Buffers	C3, I3L	C4, I4	Unit
1	30	32	ps
2	60	64	ps
3	90	96	ps
4	120	128	ps

2.2.3.4. Memory Output Clock Jitter Specifications

Table 128. Memory Output Clock Jitter Specification for Arria V GZ Devices

The clock jitter specification applies to the memory output clock pins generated using differential signal-splitter and DDIO circuits clocked by a PLL output routed on a PHY, regional, or global clock network as specified. Intel recommends using PHY clock networks whenever possible.

The clock jitter specification applies to the memory output clock pins clocked by an integer PLL.

The memory output clock jitter is applicable when an input jitter of 30 ps peak-to-peak is applied with bit error rate (BER) -12, equivalent to 14 sigma.

Clock Network	Parameter	Symbol	C3, I3L		C4, I4		Unit
			Min	Max	Min	Max	
Regional	Clock period jitter	$t_{JIT(per)}$	–55	55	–55	55	ps
	Cycle-to-cycle period jitter	$t_{JIT(cc)}$	–110	110	–110	110	ps
	Duty cycle jitter	$t_{JIT(duty)}$	–82.5	82.5	–82.5	82.5	ps
Global	Clock period jitter	$t_{JIT(per)}$	–82.5	82.5	–82.5	82.5	ps
	Cycle-to-cycle period jitter	$t_{JIT(cc)}$	–165	165	–165	165	ps
	Duty cycle jitter	$t_{JIT(duty)}$	–90	90	–90	90	ps
PHY Clock	Clock period jitter	$t_{JIT(per)}$	–30	30	–35	35	ps
	Cycle-to-cycle period jitter	$t_{JIT(cc)}$	–60	60	–70	70	ps
	Duty cycle jitter	$t_{JIT(duty)}$	–45	45	–56	56	ps

2.2.3.5. OCT Calibration Block Specifications

Table 129. OCT Calibration Block Specifications for Arria V GZ Devices

Symbol	Description	Min	Typ	Max	Unit
OCTUSRCLK	Clock required by the OCT calibration blocks	—	—	20	MHz
T_{OCTCAL}	Number of OCTUSRCLK clock cycles required for OCT R_S/R_T calibration	—	1000	—	Cycles
$T_{OCTSHIFT}$	Number of OCTUSRCLK clock cycles required for the OCT code to shift out	—	32	—	Cycles
T_{RS_RT}	Time required between the `dyn_term_ctrl` and `oe` signal transitions in a bidirectional I/O buffer to dynamically switch between OCT R_S and R_T (See the figure below.)	—	2.5	—	ns

Figure 28. Timing Diagram for `oe` and `dyn_term_ctrl` Signals

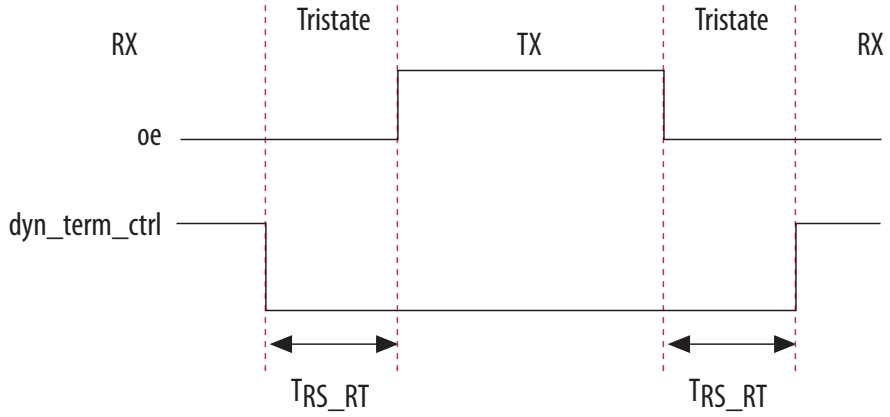

2.2.3.6. Duty Cycle Distortion (DCD) Specifications

Table 130. Worst-Case DCD on Arria V GZ I/O Pins

The DCD numbers do not cover the core clock network.

Symbol	C3, I3L		C4, I4		Unit
	Min	Max	Min	Max	
Output Duty Cycle	45	55	45	55	%

2.3. Configuration Specification

2.3.1. POR Specifications

Table 131. Fast and Standard POR Delay Specification for Arria V GZ Devices

Select the POR delay based on the MSEL setting as described in the "Configuration Schemes for Arria V Devices" table in the *Configuration, Design Security, and Remote System Upgrades in Arria V Devices* chapter.

POR Delay	Minimum (ms)	Maximum (ms)
Fast	4	12 (206)
Standard	100	300

Related Information

Configuration, Design Security, and Remote System Upgrades in Arria V Devices

2.3.2. JTAG Configuration Specifications

Table 132. JTAG Timing Parameters and Values for Arria V GZ Devices

Symbol	Description	Min	Max	Unit
t_{JCP}	TCK clock period	30	—	ns
t_{JCP}	TCK clock period	167 (207)	—	ns
t_{JCH}	TCK clock high time	14	—	ns
t_{JCL}	TCK clock low time	14	—	ns
$t_{JPSU\ (TDI)}$	TDI JTAG port setup time	2	—	ns
$t_{JPSU\ (TMS)}$	TMS JTAG port setup time	3	—	ns

continued...

(206) The maximum pulse width of the fast POR delay is 12 ms, providing enough time for the Arria V Hard IP for PCI Express Intel FPGA IP to initialize after the POR trip.

(207) The minimum TCK clock period is 167 ns if VCCBAT is within the range 1.2V-1.5V when you perform the volatile key programming.

Symbol	Description	Min	Max	Unit
t_{JPH}	JTAG port hold time	5	—	ns
t_{JPCO}	JTAG port clock to output	—	11 (208)	ns
t_{JPZX}	JTAG port high impedance to valid output	—	14 (208)	ns
t_{JPXZ}	JTAG port valid output to high impedance	—	14 (208)	ns

2.3.3. Fast Passive Parallel (FPP) Configuration Timing

2.3.3.1. DCLK-to-DATA[] Ratio (r) for FPP Configuration

FPP configuration requires a different DCLK-to-DATA[] ratio when you turn on encryption or the compression feature.

Table 133. DCLK-to-DATA[] Ratio for Arria V GZ Devices

Depending on the DCLK-to-DATA[] ratio, the host must send a DCLK frequency that is r times the data rate in bytes per second (Bps), or words per second (Wps). For example, in FPP ×16 when the DCLK-to-DATA[] ratio is 2, the DCLK frequency must be 2 times the data rate in Wps. Arria V GZ devices use the additional clock cycles to decrypt and decompress the configuration data.

Configuration Scheme	Decompression	Design Security	DCLK-to-DATA[] Ratio
FPP ×8	Disabled	Disabled	1
	Disabled	Enabled	1
	Enabled	Disabled	2
	Enabled	Enabled	2
FPP ×16	Disabled	Disabled	1
	Disabled	Enabled	2
	Enabled	Disabled	4
	Enabled	Enabled	4
FPP ×32	Disabled	Disabled	1

continued...

(208) A 1-ns adder is required for each V_{CCIO} voltage step down from 3.0 V. For example, t_{JPCO} = 12 ns if V_{CCIO} of the TDO I/O bank = 2.5 V, or 13 ns if it equals 1.8 V.

Configuration Scheme	Decompression	Design Security	DCLK-to-DATA[] Ratio
	Disabled	Enabled	4
	Enabled	Disabled	8
	Enabled	Enabled	8

2.3.3.2. FPP Configuration Timing when DCLK to DATA[] = 1

Figure 29. FPP Configuration Timing Waveform When the DCLK-to-DATA[] Ratio is 1

Timing waveform for FPP configuration when using a MAX® II or MAX V device as an external host.

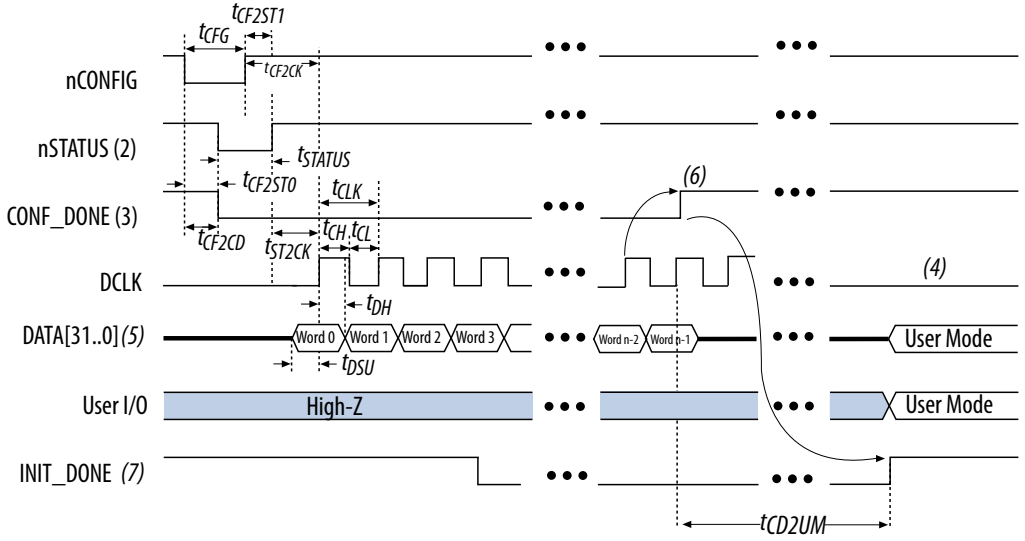

Notes:

1. The beginning of this waveform shows the device in user mode. In user mode, nCONFIG, nSTATUS, and CONF_DONE are at logic-high levels. When nCONFIG is pulled low, a reconfiguration cycle begins.
2. After power-up, the Arria V GZ device holds nSTATUS low for the time of the POR delay.
3. After power-up, before and during configuration, CONF_DONE is low.
4. Do not leave DCLK floating after configuration. DCLK is ignored after configuration is complete. It can toggle high or low if required.
5. For FPP ×16, use DATA[15..0]. For FPP ×8, use DATA[7..0]. DATA[31..0] are available as a user I/O pin after configuration. The state of this pin depends on the dual-purpose pin settings.
6. To ensure a successful configuration, send the entire configuration data to the Arria V GZ device. CONF_DONE is released high when the Arria V GZ device receives all the configuration data successfully. After CONF_DONE goes high, send two additional falling edges on DCLK to begin initialization and enter user mode.
7. After the option bit to enable the INIT_DONE pin is configured into the device, the INIT_DONE goes low.

Note: When you enable the decompression or design security feature, the DCLK-to-DATA[] ratio varies for FPP ×8, FPP ×16, and FPP ×32. For the respective DCLK-to-DATA[] ratio, refer to the *DCLK-to-DATA[] Ratio for Arria V GZ Devices* table.

Table 134. FPP Timing Parameters for Arria V GZ Devices When the DCLK-to-DATA[] Ratio is 1

Use these timing parameters when the decompression and design security features are disabled.

Symbol	Parameter	Minimum	Maximum	Unit
t_{CF2CD}	nCONFIG low to CONF_DONE low	—	600	ns
t_{CF2ST0}	nCONFIG low to nSTATUS low	—	600	ns
t_{CFG}	nCONFIG low pulse width	2	—	µs
t_{STATUS}	nSTATUS low pulse width	268	1,506 (209)	µs
t_{CF2ST1}	nCONFIG high to nSTATUS high	—	1,506 (210)	µs
t_{CF2CK} (211)	nCONFIG high to first rising edge on DCLK	1,506	—	µs
t_{ST2CK} (211)	nSTATUS high to first rising edge of DCLK	2	—	µs
t_{DSU}	DATA[] setup time before rising edge on DCLK	5.5	—	ns
t_{DH}	DATA[] hold time after rising edge on DCLK	0	—	ns
t_{CH}	DCLK high time	0.45 × 1/f_{MAX}	—	s
t_{CL}	DCLK low time	0.45 × 1/f_{MAX}	—	s
t_{CLK}	DCLK period	1/f_{MAX}	—	s
f_{MAX}	DCLK frequency (FPP ×8/×16)	—	125	MHz
	DCLK frequency (FPP ×32)	—	100	MHz

continued...

(209) This value is applicable if you do not delay configuration by extending the nCONFIG or nSTATUS low pulse width.

(210) This value is applicable if you do not delay configuration by externally holding the nSTATUS low.

(211) If nSTATUS is monitored, follow the t_{ST2CK} specification. If nSTATUS is not monitored, follow the t_{CF2CK} specification.

Symbol	Parameter	Minimum	Maximum	Unit
t_{CD2UM}	CONF_DONE high to user mode (212)	175	437	µs
t_{CD2CU}	CONF_DONE high to CLKUSR enabled	4 × maximum DCLK period	—	—
t_{CD2UMC}	CONF_DONE high to user mode with CLKUSR option on	t_{CD2CU} + (8576 × CLKUSR period) (213)	—	—

Related Information

- DCLK-to-DATA[] Ratio (r) for FPP Configuration on page 153
- Configuration, Design Security, and Remote System Upgrades in Arria V Devices

(212) The minimum and maximum numbers apply only if you chose the internal oscillator as the clock source for initializing the device.

(213) To enable the CLKUSR pin as the initialization clock source and to obtain the maximum frequency specification on these pins, refer to the *Initialization* section of the *Configuration, Design Security, and Remote System Upgrades in Arria V Devices* chapter.

2.3.3.3. FPP Configuration Timing when DCLK to DATA[] > 1

Figure 30. FPP Configuration Timing Waveform When the DCLK-to-DATA[] Ratio is >1 ,

Timing when using a MAX II device, MAX V device, or microprocessor as an external host.

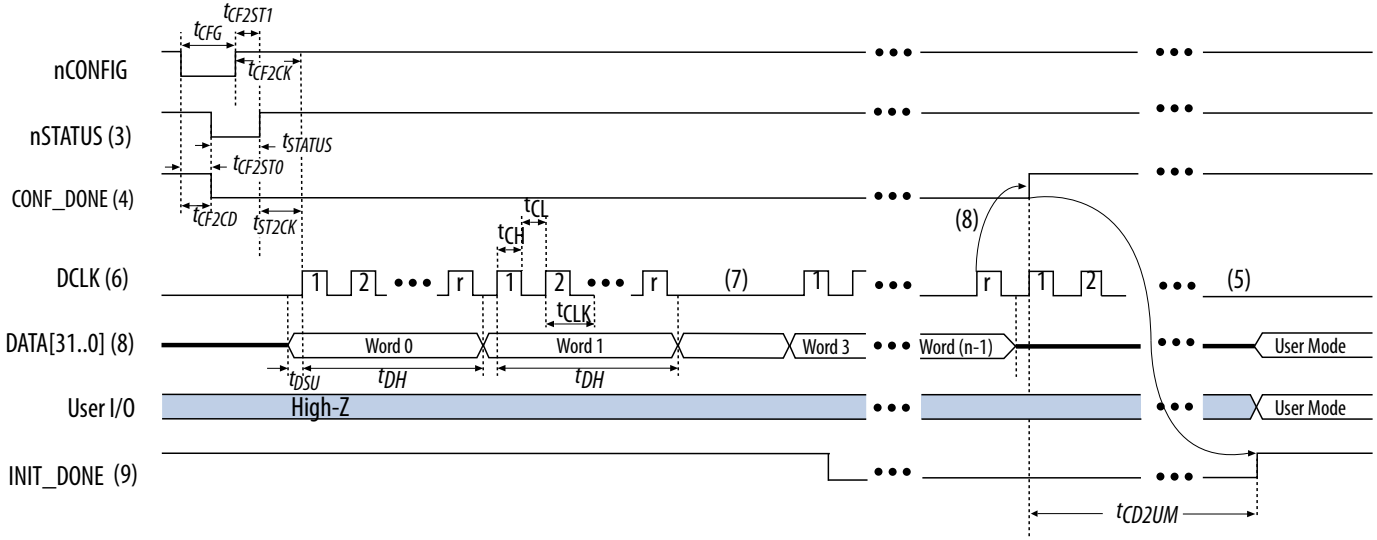

Notes:

1. To find out the DCLK-to-DATA[] ratio for your system, refer to the "DCLK-to-DATA[] Ratio for Arria V GZ Devices" table.
2. The beginning of this waveform shows the device in user mode. In user mode, nCONFIG, nSTATUS, and CONF_DONE are at logic high levels. When nCONFIG is pulled low, a reconfiguration cycle begins.
3. After power-up, the Arria V GZ device holds nSTATUS low for the time as specified by the POR delay.
4. After power-up, before and during configuration, CONF_DONE is low.
5. Do not leave DCLK floating after configuration. DCLK is ignored after configuration is complete. It can toggle high or low if required.
6. "r" denotes the DCLK-to-DATA[] ratio. For the DCLK-to-DATA[] ratio based on the decompression and the design security feature enable settings, refer to the "DCLK-to-DATA[] Ratio for Arria V GZ Devices" table.
7. If needed, pause DCLK by holding it low. When DCLK restarts, the external host must provide data on the DATA[31..0] pins prior to sending the first DCLK rising edge.
8. To ensure a successful configuration, send the entire configuration data to the Arria V GZ device. CONF_DONE is released high after the Arria V GZ device receives all the configuration data successfully. After CONF_DONE goes high, send two additional falling edges on DCLK to begin initialization and enter user mode.
9. After the option bit to enable the INIT_DONE pin is configured into the device, the INIT_DONE goes low.

Table 135. FPP Timing Parameters for Arria V GZ Devices When the DCLK-to-DATA[] Ratio is >1

Use these timing parameters when you use the decompression and design security features.

Symbol	Parameter	Minimum	Maximum	Unit
t_{CF2CD}	nCONFIG low to CONF_DONE low	—	600	ns
t_{CF2ST0}	nCONFIG low to nSTATUS low	—	600	ns
t_{CFG}	nCONFIG low pulse width	2	—	µs
t_{STATUS}	nSTATUS low pulse width	268	1,506 (214)	µs
t_{CF2ST1}	nCONFIG high to nSTATUS high	—	1,506 (215)	µs
t_{CF2CK} (216)	nCONFIG high to first rising edge on DCLK	1,506	—	µs
t_{ST2CK} (216)	nSTATUS high to first rising edge of DCLK	2	—	µs
t_{DSU}	DATA[] setup time before rising edge on DCLK	5.5	—	ns
t_{DH}	DATA[] hold time after rising edge on DCLK	N–1/f_{DCLK} (217)	—	s
t_{CH}	DCLK high time	0.45 × 1/f_{MAX}	—	s
t_{CL}	DCLK low time	0.45 × 1/f_{MAX}	—	s
t_{CLK}	DCLK period	1/f_{MAX}	—	s
f_{MAX}	DCLK frequency (FPP ×8/×16)	—	125	MHz
	DCLK frequency (FPP ×32)	—	100	MHz
t_R	Input rise time	—	40	ns
t_F	Input fall time	—	40	ns

continued...

(214) You can obtain this value if you do not delay configuration by extending the nCONFIG or nSTATUS low pulse width.

(215) You can obtain this value if you do not delay configuration by externally holding the nSTATUS low.

(216) If nSTATUS is monitored, follow the t_{ST2CK} specification. If nSTATUS is not monitored, follow the t_{CF2CK} specification.

(217) N is the DCLK-to-DATA ratio and f_{DCLK} is the DCLK frequency the system is operating.

Symbol	Parameter	Minimum	Maximum	Unit
t_{CD2UM}	CONF_DONE high to user mode (218)	175	437	µs
t_{CD2CU}	CONF_DONE high to CLKUSR enabled	4 × maximum DCLK period	—	—
t_{CD2UMC}	CONF_DONE high to user mode with CLKUSR option on	t_{CD2CU} + (8576 × CLKUSR period) (219)	—	—

Related Information

- DCLK-to-DATA[] Ratio (r) for FPP Configuration on page 153
- Configuration, Design Security, and Remote System Upgrades in Arria V Devices

(218) The minimum and maximum numbers apply only if you use the internal oscillator as the clock source for initializing the device.

(219) To enable the CLKUSR pin as the initialization clock source and to obtain the maximum frequency specification on these pins, refer to the *Initialization* section of the *Configuration, Design Security, and Remote System Upgrades in Arria V Devices* chapter.

2.3.4. Active Serial Configuration Timing

Figure 31. AS Configuration Timing

Timing waveform for the active serial (AS) x1 mode and AS x4 mode configuration timing.

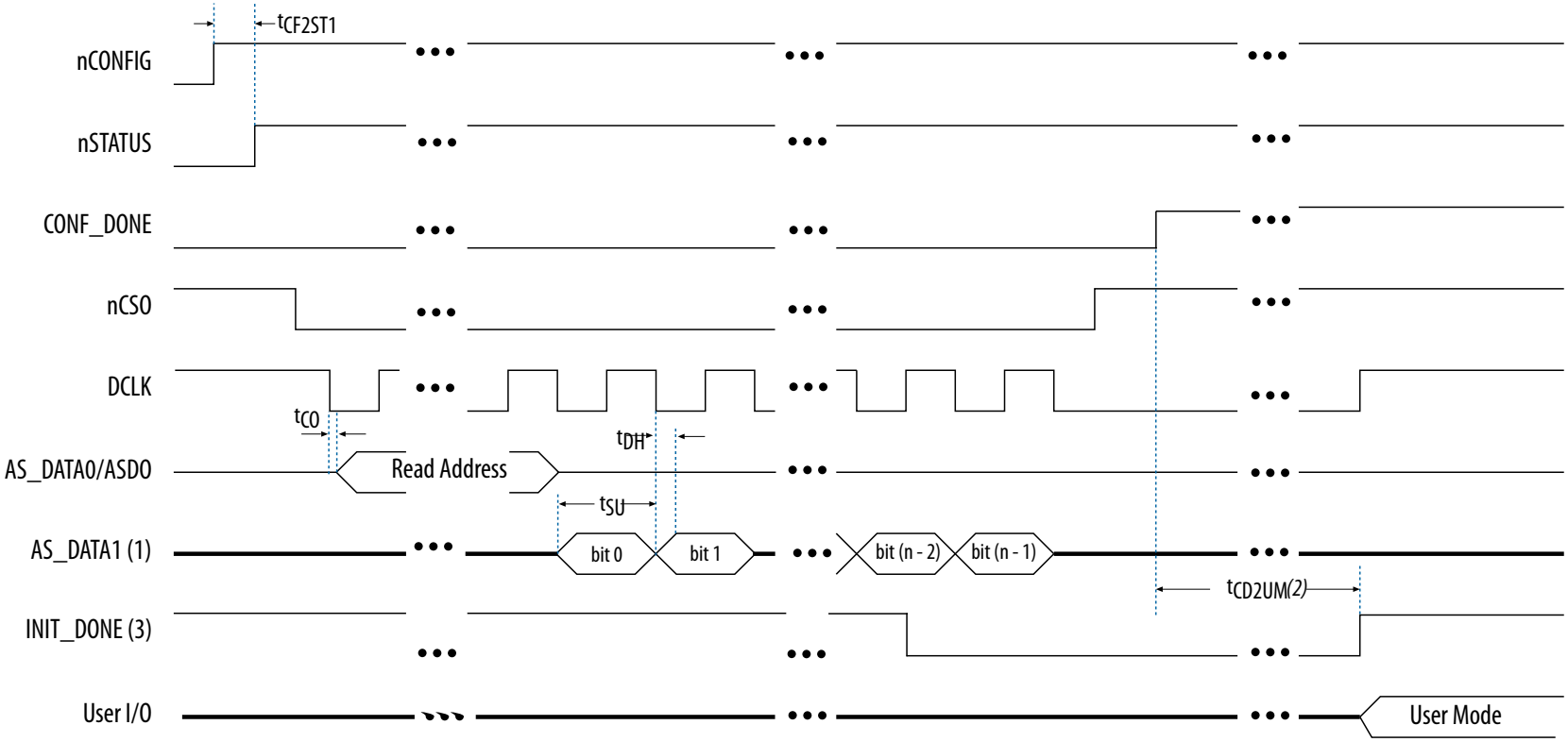

Notes:
1. If you are using AS ×4 mode, this signal represents the AS_DATA[3..0] and EPCQ sends in 4-bits of data for each DCLK cycle.
2. The initialization clock can be from internal oscillator or CLKUSR pin.
3. After the option bit to enable the INIT_DONE pin is configured into the device, the INIT_DONE goes low.

Table 136. AS Timing Parameters for AS x1 and AS x4 Configurations in Arria V GZ Devices

The minimum and maximum numbers apply only if you choose the internal oscillator as the clock source for initializing the device.

t_{CF2CD}, t_{CF2ST0}, t_{CFG}, t_{STATUS}, and t_{CF2ST1} timing parameters are identical to the timing parameters for PS mode listed in the "PS Timing Parameters for Arria V GZ Devices" table.

Symbol	Parameter	Condition	Minimum	Maximum	Unit
t_{CO} (220)	DCLK falling edge to AS_DATA0/ASDO output	—	—	4	ns
t_{SU} (221)	Data setup time before falling edge on DCLK	—	1.5	—	ns
t_{DH} (221)	Data hold time after falling edge on DCLK	–3 speed grade	3.7	—	ns
		–4 speed grade	3.9	—	ns
t_{CD2UM}	CONF_DONE high to user mode (222)	—	175	437	µs
t_{CD2CU}	CONF_DONE high to CLKUSR enabled	—	4 × maximum DCLK period	—	—
t_{CD2UMC}	CONF_DONE high to user mode with CLKUSR option on	—	t_{CD2CU} + (8576 × CLKUSR period)	—	—

(220) Load capacitance for DCLK = 6 pF and AS_DATA/ASDO = 8 pF. Intel recommends obtaining the t_{CO} for a given link (including receiver, transmission lines, connectors, and termination resistors) through IBIS or HSPICE simulation.

(221) To evaluate the data setup (t_{SU}) and data hold time (t_{DH}) slack on your board in order to ensure you are meeting the t_{SU} and t_{DH} requirement, Intel recommends following the guideline in the "Evaluating Data Setup and Hold Timing Slack" chapter in *AN822: Intel FPGA Configuration Device Migration Guideline*.

(222) To enable the CLKUSR pin as the initialization clock source and to obtain the maximum frequency specification on this pin, refer to the "Initialization" section of the *Configuration, Design Security, and Remote System Upgrades in Arria V Devices* chapter.

Table 137. DCLK Frequency Specification in the AS Configuration Scheme

This applies to the DCLK frequency specification when using the internal oscillator as the configuration clock source.

The AS multi-device configuration scheme does not support `DCLK` frequency of 100 MHz.

Minimum	Typical	Maximum	Unit
5.3	7.9	12.5	MHz
10.6	15.7	25.0	MHz
21.3	31.4	50.0	MHz
42.6	62.9	100.0	MHz

Related Information

- Passive Serial Configuration Timing on page 164
- Evaluating Data Setup and Hold Timing Slack chapter, AN822: Intel FPGA Configuration Device Migration Guideline
- Configuration, Design Security, and Remote System Upgrades in Arria V Devices

2.3.5. Passive Serial Configuration Timing

Figure 32. PS Configuration Timing Waveform

Timing waveform for a passive serial (PS) configuration when using a MAX II device, MAX V device, or microprocessor as an external host.

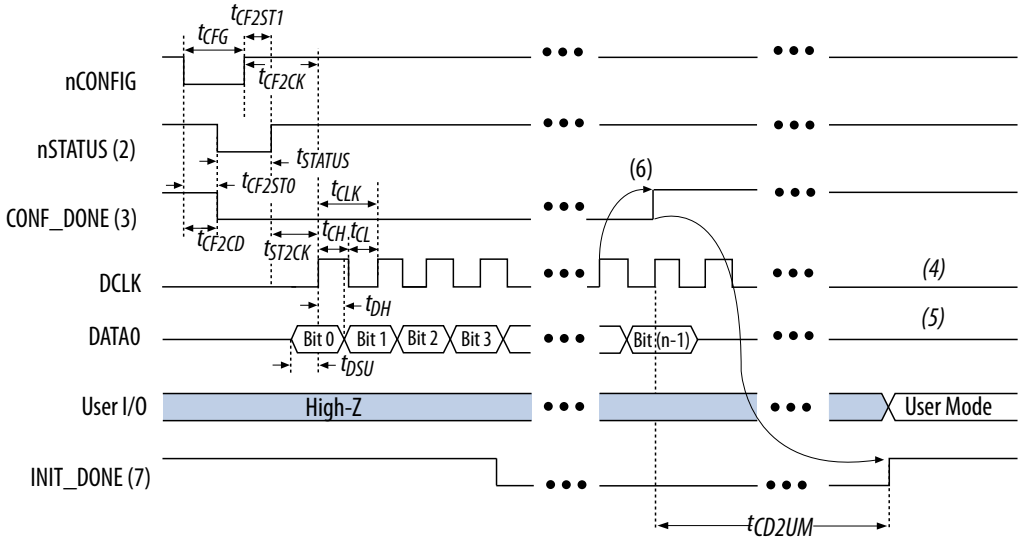

Notes:

1. The beginning of this waveform shows the device in user mode. In user mode, nCONFIG, nSTATUS, and CONF_DONE are at logic high levels. When nCONFIG is pulled low, a reconfiguration cycle begins.
2. After power-up, the Arria V GZ device holds nSTATUS low for the time of the POR delay.
3. After power-up, before and during configuration, CONF_DONE is low.
4. Do not leave DCLK floating after configuration. DCLK is ignored after configuration is complete. It can toggle high or low if required.
5. DATA0 is available as a user I/O pin after configuration. The state of this pin depends on the dual-purpose pin settings in the Device and Pins Option.
6. To ensure a successful configuration, send the entire configuration data to the Arria V GZ device. CONF_DONE is released high after the Arria V GZ device receives all the configuration data successfully. After CONF_DONE goes high, send two additional falling edges on DCLK to begin initialization and enter user mode.
7. After the option bit to enable the INIT_DONE pin is configured into the device, the INIT_DONE goes low.

Table 138. PS Timing Parameters for Arria V GZ Devices

Symbol	Parameter	Minimum	Maximum	Unit
t_{CF2CD}	nCONFIG low to CONF_DONE low	—	600	ns
t_{CF2ST0}	nCONFIG low to nSTATUS low	—	600	ns
t_{CFG}	nCONFIG low pulse width	2	—	µs
t_{STATUS}	nSTATUS low pulse width	268	1,506 (223)	µs
t_{CF2ST1}	nCONFIG high to nSTATUS high	—	1,506 (224)	µs
t_{CF2CK} (225)	nCONFIG high to first rising edge on DCLK	1,506	—	µs
t_{ST2CK} (225)	nSTATUS high to first rising edge of DCLK	2	—	µs
t_{DSU}	DATA[] setup time before rising edge on DCLK	5.5	—	ns
t_{DH}	DATA[] hold time after rising edge on DCLK	0	—	ns
t_{CH}	DCLK high time	0.45 × 1/f_{MAX}	—	s
t_{CL}	DCLK low time	0.45 × 1/f_{MAX}	—	s
t_{CLK}	DCLK period	1/f_{MAX}	—	s
f_{MAX}	DCLK frequency	—	125	MHz
t_{CD2UM}	CONF_DONE high to user mode (226)	175	437	µs
t_{CD2CU}	CONF_DONE high to CLKUSR enabled	4 × maximum DCLK period	—	—
t_{CD2UMC}	CONF_DONE high to user mode with CLKUSR option on	t_{CD2CU} + (8576 × CLKUSR period) (227)	—	—

(223) This value is applicable if you do not delay configuration by extending the nCONFIG or nSTATUS low pulse width.

(224) This value is applicable if you do not delay configuration by externally holding the nSTATUS low.

(225) If nSTATUS is monitored, follow the t_{ST2CK} specification. If nSTATUS is not monitored, follow the t_{CF2CK} specification.

(226) The minimum and maximum numbers apply only if you choose the internal oscillator as the clock source for initializing the device.

Related Information

Configuration, Design Security, and Remote System Upgrades in Arria V Devices

2.3.6. Initialization

Table 139. Initialization Clock Source Option and the Maximum Frequency for Arria V GZ Devices

Initialization Clock Source	Configuration Schemes	Maximum Frequency (MHz)	Minimum Number of Clock Cycles
Internal Oscillator	AS, PS, FPP	12.5	8576
CLKUSR (228)	PS, FPP	125	
	AS	100	
DCLK	PS, FPP	125	

2.3.7. Configuration Files

Use the following table to estimate the file size before design compilation. Different configuration file formats, such as a hexadecimal file (.hex) or tabular text file (.ttf) format, have different file sizes.

For the different types of configuration file and file sizes, refer to the Intel Quartus Prime software. However, for a specific version of the Intel Quartus Prime software, any design targeted for the same device has the same uncompressed configuration file size.

(227) To enable the CLKUSR pin as the initialization clock source and to obtain the maximum frequency specification on these pins, refer to the *Initialization* section of the *Configuration, Design Security, and Remote System Upgrades in Arria V Devices* chapter.

(228) To enable CLKUSR as the initialization clock source, turn on the **Enable user-supplied start-up clock (CLKUSR)** option in the Intel Quartus Prime software from the **General** panel of the **Device and Pin Options** dialog box.

Table 140. Uncompressed .rbf Sizes for Arria V GZ Devices

Variant	Member Code	Configuration .rbf Size (bits)	IOCSR .rbf Size (bits) (229)
Arria V GZ	E1	137,598,880	562,208
	E3	137,598,880	562,208
	E5	213,798,880	561,760
	E7	213,798,880	561,760

Table 141. Minimum Configuration Time Estimation for Arria V GZ Devices

Variant	Member Code	Active Serial (230)			Fast Passive Parallel (231)		
		Width	DCLK (MHz)	Min Config Time (ms)	Width	DCLK (MHz)	Min Config Time (ms)
Arria V GZ	E1	4	100	344	32	100	43
	E3	4	100	344	32	100	43
	E5	4	100	534	32	100	67
	E7	4	100	534	32	100	67

2.3.8. Remote System Upgrades Circuitry Timing Specification

Table 142. Remote System Upgrade Circuitry Timing Specifications

Parameter	Minimum	Maximum	Unit
$t_{RU_nCONFIG}$ (232)	250	—	ns
$t_{RU_nRSTIMER}$ (233)	250	—	ns

(229) The IOCSR **.rbf** size is specifically for the Configuration via Protocol (CvP) feature.

(230) DCLK frequency of 100 MHz using external CLKUSR.

(231) Max FPGA FPP bandwidth may exceed bandwidth available from some external storage or control logic.

Related Information

- Configuration, Design Security, and Remote System Upgrades in Arria V Devices
  For more information about the reconfiguration input for the Remote Update Intel FPGA IP core, refer to the *User Watchdog Timer* section.
- Configuration, Design Security, and Remote System Upgrades in Arria V Devices
  For more information about the `reset_timer` input for the Remote Update Intel FPGA IP core, refer to the *Remote System Upgrade State Machine* section.

2.3.9. User Watchdog Internal Oscillator Frequency Specification

Table 143. User Watchdog Internal Oscillator Frequency Specifications

Minimum	Typical	Maximum	Unit
5.3	7.9	12.5	MHz

2.4. I/O Timing

Intel offers two ways to determine I/O timing—the Excel-based I/O Timing and the Intel Quartus Prime Timing Analyzer.

Excel-based I/O timing provides pin timing performance for each device density and speed grade. The data is typically used prior to designing the FPGA to get an estimate of the timing budget as part of the link timing analysis.

The Intel Quartus Prime Timing Analyzer provides a more accurate and precise I/O timing data based on the specifics of the design after you complete place-and-route.

(232) This is equivalent to strobing the reconfiguration input of the Remote Update Intel FPGA IP core high for the minimum timing specification. For more information, refer to the *Remote System Upgrade State Machine* section in the *Configuration, Design Security, and Remote System Upgrades in Arria V Devices* chapter.

(233) This is equivalent to strobing the reset_timer input of the Remote Update Intel FPGA IP core high for the minimum timing specification. For more information, refer to the *User Watchdog Timer* section in the *Configuration, Design Security, and Remote System Upgrades in Arria V Devices* chapter.

Related Information

Arria V Devices Documentation page
For the Excel-based I/O Timing spreadsheet.

2.4.1. Programmable IOE Delay

Table 144. IOE Programmable Delay for Arria V GZ Devices

Parameter (234)	Available Settings	Min Offset (235)	Fast Model		Slow Model				Unit
			Industrial	Commercial	C3	C4	I3L	I4	
D1	64	0	0.464	0.493	0.924	1.011	0.921	1.006	ns
D2	32	0	0.230	0.244	0.459	0.503	0.456	0.500	ns
D3	8	0	1.587	1.699	2.992	3.192	3.047	3.257	ns
D4	64	0	0.464	0.492	0.924	1.011	0.920	1.006	ns
D5	64	0	0.464	0.493	0.924	1.011	0.921	1.006	ns
D6	32	0	0.229	0.244	0.458	0.503	0.456	0.499	ns

(234) You can set this value in the Intel Quartus Prime software by selecting **D1**, **D2**, **D3**, **D4**, **D5**, and **D6** in the **Assignment Name** column of **Assignment Editor**.

(235) Minimum offset does not include the intrinsic delay.

2.4.2. Programmable Output Buffer Delay

Table 145. Programmable Output Buffer Delay for Arria V GZ Devices

You can set the programmable output buffer delay in the Intel Quartus Prime software by setting the **Output Buffer Delay Control** assignment to either positive, negative, or both edges, with the specific values stated here (in ps) for the **Output Buffer Delay** assignment.

Symbol	Parameter	Typical	Unit
D_{OUTBUF}	Rising and/or falling edge delay	0 (default)	ps
		50	ps
		100	ps
		150	ps

2.5. Glossary

Table 146. Glossary

Term	Definition
Differential I/O Standards	Receiver Input Waveforms

continued...

Term	Definition
	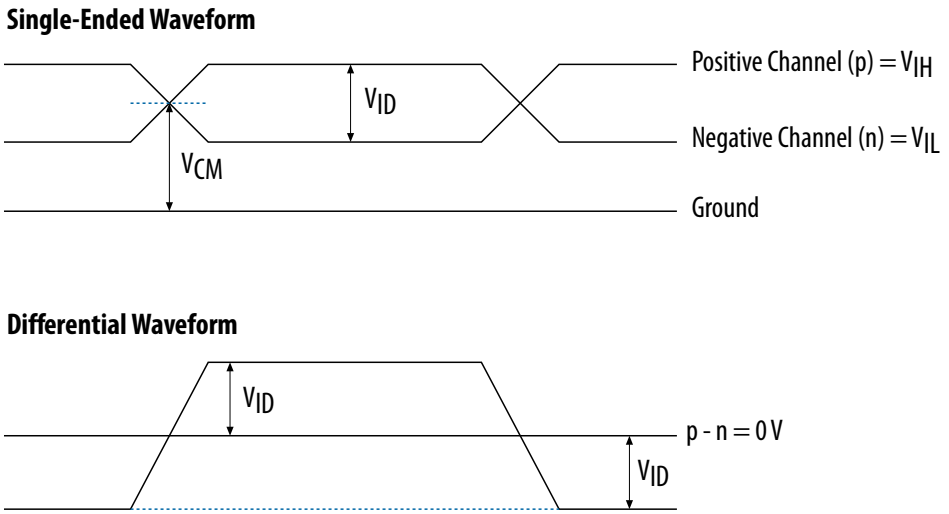 Transmitter Output Waveforms

continued...

Term	Definition
	Single-Ended Waveform 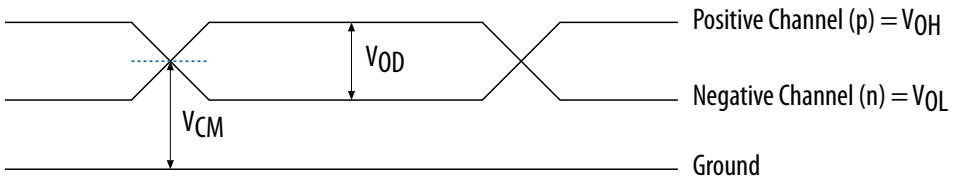 **Differential Waveform** 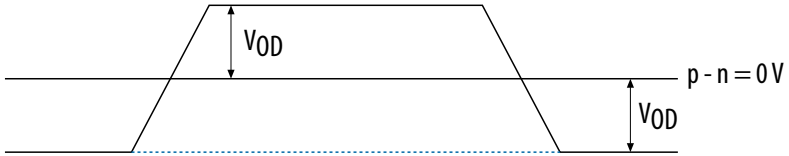
f_{HSCLK}	Left and right PLL input clock frequency.
f_{HSDR}	High-speed I/O block—Maximum and minimum LVDS data transfer rate (f_{HSDR} = 1/TUI), non-DPA.
$f_{HSDRDPA}$	High-speed I/O block—Maximum and minimum LVDS data transfer rate ($f_{HSDRDPA}$ = 1/TUI), DPA.
J	High-speed I/O block—Deserialization factor (width of parallel data bus).
JTAG Timing Specifications	JTAG Timing Specifications:

continued...

Term	Definition
	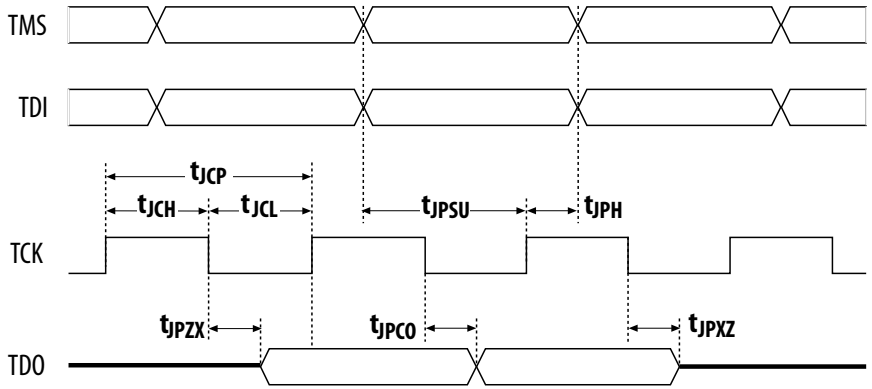
PLL Specifications	Diagram of PLL Specifications 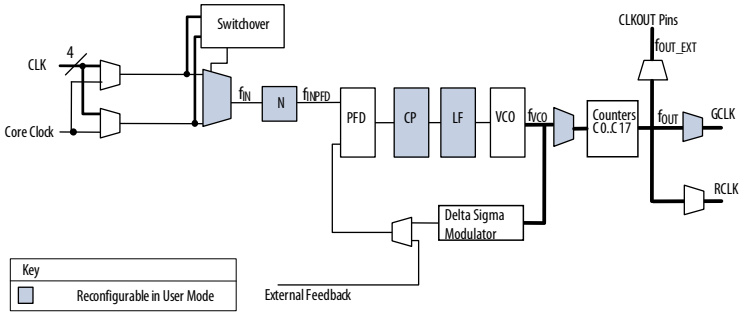 Note: 1. Core Clock can only be fed by dedicated clock input pins or PLL outputs.
R_L	Receiver differential input discrete resistor (external to the Arria V GZ device).
SW (sampling window)	Timing Diagram—the period of time during which the data must be valid in order to capture it correctly. The setup and hold times determine the ideal strobe position within the sampling window, as shown:

continued...

Term	Definition
	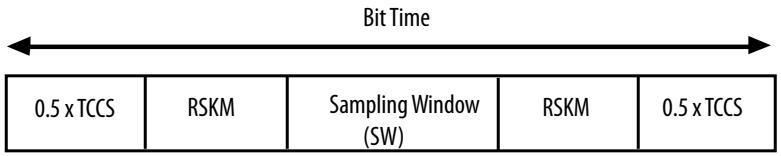
Single-ended voltage referenced I/O standard	The JEDEC standard for SSTL and HSTL I/O defines both the AC and DC input signal values. The AC values indicate the voltage levels at which the receiver must meet its timing specifications. The DC values indicate the voltage levels at which the final logic state of the receiver is unambiguously defined. After the receiver input has crossed the AC value, the receiver changes to the new logic state. The new logic state is then maintained as long as the input stays beyond the DC threshold. This approach is intended to provide predictable receiver timing in the presence of input waveform ringing: Single-Ended Voltage Referenced I/O Standard 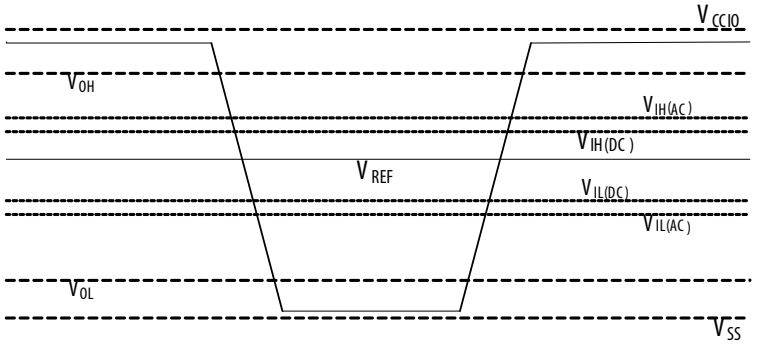
t_C	High-speed receiver and transmitter input and output clock period.
TCCS (channel-to-channel-skew)	The timing difference between the fastest and slowest output edges, including t_{CO} variation and clock skew, across channels driven by the same PLL. The clock is included in the TCCS measurement (refer to the Timing Diagram figure under SW in this table).
t_{DUTY}	High-speed I/O block—Duty cycle on the high-speed transmitter output clock.
t_{FALL}	Signal high-to-low transition time (80-20%)
t_{INCCJ}	Cycle-to-cycle jitter tolerance on the PLL clock input.
t_{OUTPJ_IO}	Period jitter on the general purpose I/O driven by a PLL.
t_{OUTPJ_DC}	Period jitter on the dedicated clock output driven by a PLL.

continued...

Term	Definition
t_{RISE}	Signal low-to-high transition time (20-80%)
Timing Unit Interval (TUI)	The timing budget allowed for skew, propagation delays, and the data sampling window. (TUI = 1/(receiver input clock frequency multiplication factor) = t_C/w)
$V_{CM(DC)}$	DC common mode input voltage.
V_{ICM}	Input common mode voltage—The common mode of the differential signal at the receiver.
V_{ID}	Input differential voltage swing—The difference in voltage between the positive and complementary conductors of a differential transmission at the receiver.
$V_{DIF(AC)}$	AC differential input voltage—Minimum AC input differential voltage required for switching.
$V_{DIF(DC)}$	DC differential input voltage— Minimum DC input differential voltage required for switching.
V_{IH}	Voltage input high—The minimum positive voltage applied to the input which is accepted by the device as a logic high.
$V_{IH(AC)}$	High-level AC input voltage
$V_{IH(DC)}$	High-level DC input voltage
V_{IL}	Voltage input low—The maximum positive voltage applied to the input which is accepted by the device as a logic low.
$V_{IL(AC)}$	Low-level AC input voltage
$V_{IL(DC)}$	Low-level DC input voltage
V_{OCM}	Output common mode voltage—The common mode of the differential signal at the transmitter.
V_{OD}	Output differential voltage swing—The difference in voltage between the positive and complementary conductors of a differential transmission at the transmitter.
V_{SWING}	Differential input voltage
V_X	Input differential cross point voltage
V_{OX}	Output differential cross point voltage
W	High-speed I/O block—clock boost factor

2.6. Arria V GZ Device Datasheet Revision History

Document Version	Changes
2019.04.26	Added a note for Conversion Time in the *Internal Temperature Sensing Diode Specification for Arria V GZ Devices* table.
2019.01.25	• Added *Arria V GZ Devices Overshoot Duration* diagram. • Changed "VCO post-scale counter K value" to "VCO post divider value" in the f_{VCO} note in the *PLL Specifications for Arria V GZ Devices* table. • Updated the *AS Timing Parameters for AS ×1 and ×4 Configurations in Arria V GZ Devices* table. ☐ Updated t_{DH} specifications. These specifications are applicable to the commercial and industrial grade devices. ☐ Added note to t_{CO}, t_{SU}, and t_{DH}. • Changed instances of *Quartus II* to *Intel Quartus Prime*. • Removed PowerPlay text from tool name. • Renamed IP cores as per Intel rebranding.

Date	Version	Changes
February 2017	2017.02.10	• Changed the minimum value for t_{CD2UMC} in the "FPP Timing Parameters for Arria V GZ Devices When the DCLK-to-DATA[] Ratio is 1" table. • Changed the minimum value for t_{CD2UMC} in the "FPP Timing Parameters for Arria V GZ Devices When the DCLK-to-DATA[] Ratio is >1" table. • Changed the minimum value for t_{CD2UMC} in the "AS Timing Parameters for AS x1 and AS x4 Configurations in Arria V GZ Devices" table. • Changed the minimum value for t_{CD2UMC} in the "PS Timing Parameters for Arria V GZ Devices" table. • Changed the minimum number of clock cycles value in the "Initialization Clock Source Option and the Maximum Frequency for Arria V GZ Devices" table.
June 2016	2016.06.20	• Changed column heading from "Value" to "Maximum" in the "Pin Capacitance for Arria V GZ Devices" table. • Changed the minimum supported data rate range values from "1000" to "2000" in the "ATX PLL Specifications for Arria V GZ Devices" table. • Added the supported data rates for the following output standards using true LVDS output buffer types in the "High-Speed Clock Specifications for Arria V GZ Devices" table: ☐ True RSDS output standard: data rates of up to 230 Mbps ☐ True mini-LVDS output standard: data rates of up to 340 Mbps
December 2015	2015.12.16	• Removed the CDR ppm tolerance specification from the "Receiver Specifications for Arria V GZ Devices" table. • Removed transmitter rise and fall time specifications from the "Transmitter Specifications for Arria V GZ Devices" table. • Changed the .rbf sizes in the "Uncompressed .rbf Sizes for Arria V GZ Devices" table. • Added a footnote to the "Transmitter High-Speed I/O Specifications for Arria V GZ Devices" table.

continued...

Date	Version	Changes
June 2015	2015.06.16	• Changed the conditions for the reference clock rise and fall time and added a note to the condition in the "Reference Clock Specifications for Arria V GZ Devices" table. • Added a note to the "Minimum differential eye opening at receiver serial input pins" specification in the "Receiver Specifications for Arria V GZ Devices" table.
January 2015	2015.01.30	• Added 240-Ω to the "OCT Calibration Accuracy Specifications for Arria V GZ Devices" table. • Changed the CDR PPM tolerance spec in the "Receiver Specifications for Arria V GZ Devices" table. • Added additional max data rate for fPLL in the "Fractional PLL Specifications for Arria V GZ Devices" table.
July 2014	3.8	• Updated Table 21. • Updated Table 22 V_{OCM} (DC Coupled) condition. • Updated the DCLK note to Figure 6, Figure 7, and Figure 9. • Added note to Table 5 and Table 6. • Added the DCLK specification to Table 50. • Added note to Table 51. • Updated the list of parameters in Table 53.
February 2014	3.7	Updated Table 28.
December 2013	3.6	• Updated Table 2, Table 13, Table 18, Table 19, Table 22, Table 30, Table 33, Table 37, Table 38, Table 45, Table 46, Table 47, Table 56, Table 49. • Updated “PLL Specifications”.
August 2013	3.5	Updated Table 28.
August 2013	3.4	• Removed Preliminary tags for Table 2, Table 4, Table 5, Table 14, Table 27, Table 28, Table 29, Table 31, Table 32, Table 43, Table 45, Table 46, Table 47, Table 48, Table 49, Table 50, and Table 54. • Updated Table 2 and Table 28.
June 2013	3.3	Updated Table 23, Table 28, Table 51, and Table 55.
May 2013	3.2	• Added Table 23. • Updated Table 5, Table 22, Table 26, and Table 57. • Updated Figure 6, Figure 7, Figure 8, and Figure 9.
March 2013	3.1	• Updated Table 2, Table 6, Table 7, Table 8, Table 19, Table 22, Table 26, Table 29, Table 52. • Updated “Maximum Allowed Overshoot and Undershoot Voltage”.
December 2012	3.0	Initial release.

Looking for pricing, stock, or lifecycle information?

Click below to explore more details on WIN SOURCE:

- View 5ASXBB5D4F40I5N on WIN SOURCE
- Altera Information

Optimize Your Supply Chain with WIN SOURCE Solutions

- Global Sourcing Solution
- Obsolete Management
- Cost Control Management
- Shortage Management
- Alternative Solution
- Excess Inventory Management