THE DATASHEET OF

SK42H02G8

Features/Benefits

- **Broad range of products**
- **Different travel - 2mm, 3mm & 4mm**
- **Various circuit design - 1P2T/3T/4T & 2P2T/3T/4T**
- **Various knob length & style**
- **Shorting or non-shorting**
- **Custom design available**
- **RoHS compliant**

Typical Applications

- **Consumer electronics**
- **Computer peripherals**
- **Telecommunication**
- **Audio & visual equipment**
- **Industrial**

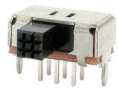

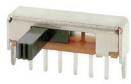

How To Order

Part number list is shown below. For individual part details, please refer to the following pages.

Note: Knob material POM is suitable for Iron soldering; PA is compatible for wave soldering.

Part Number (Part Description)	Product Details
SK-12D04-G 3 NS	1P2T, 2mm travel, Frame H=4.7mm, Tail L=3.3mm, Knob type G with L=3mm, POM, Non shorting
SK-12D04-VG 3 NS	1P2T, 2mm travel, Frame H=4.7mm, Tail L=3.3mm, Knob type VG with L=3mm, POM, Non shorting
SK-12D07-G 5 NS PA	1P2T, 2mm travel, Frame H=4.7mm, Tail L=3.3mm, Knob type G with L=5mm, PA, Non shorting
SK-12D07-G 6 NS PA	1P2T, 2mm travel, Frame H=4.7mm, Tail L=3.3mm, Knob type G with L=6mm, PA, Non shorting
SK-12D07-VG 4 NS PA	1P2T, 2mm travel, Frame H=4.7mm, Tail L=3.3mm, Knob type VG with L=4mm, PA, Non shorting
SK-12D07-VG 4 NS PA LT	1P2T, 2mm travel, Frame H=5mm, Vertical benting, Knob type VG with L=4mm, PA, Non shorting
SK-12D26-G 6.5 NS	1P2T, 2mm travel, Frame H=10.5mm, Tail L=3.3mm, Knob type G with L=6.5mm, POM, Non shorting
SK-12D26-G 6.5 NS GY	1P2T, 2mm travel, Frame H=10.5mm, Tail L=3.3mm, Knob type G with L=6.5mm, POM, Grey, Non shorting
SK-13D16-VG 5 PA	1P3T, 2mm travel, Frame H=4.7mm, Tail L=3.3mm, Knob type VG with L=5mm, PA
SK-13D37-G 6 NS	1P3T, 2mm travel, Frame H=8.5mm, Tail L=2.3mm, Knob type G with L=6mm, POM, Non shorting
SK-14D01-G 6	1P4T, 2mm travel, Frame H=4.7mm, Tail L=3.3mm, Knob type G with L=6mm, POM
SK-22D01-MG 5 NS	2P2T, 2mm travel, Frame H=3mm, Tail L=2.8mm, Knob type MG with L=5mm, POM, Non shorting
SK-22D05-G 4 NS	2P2T, 2mm travel, Frame H=5mm, Tail L=2.8mm, Knob type G with L=4mm, POM, Non shorting
SK-22D05-G 6 NS	2P2T, 2mm travel, Frame H=5mm, Tail L=2.8mm, Knob type G with L=4mm, POM, Non shorting
SK-22D06-SG 5 NS	2P2T, 2mm travel, Frame H=6mm, Tail L=2.5mm, Knob type SG with L=5mm, POM, Non shorting
SK-22D06-SG 6 NS	2P2T, 2mm travel, Frame H=6mm, Tail L=2.5mm, Knob type SG with L=5mm, POM, Non shorting
SK-22D21-G 5 NS	2P2T, 2mm travel, Frame H=8.5mm, Tail L=3.5mm, Knob type G with L=5mm, POM, Non shorting
SK-22D28-G 6 NS	2P2T, 2mm travel, Frame H=8.5mm, Tail L=3.3mm, Knob type G with L=6mm, POM, Non shorting
SK-22D37-SG 6 NS PA	2P2T, 2mm travel, Frame H=5.5mm, Tail L=2.3mm, Knob type SG with L=6mm, PA, Non shorting
SK-23D04-G 9	2P3T, 2mm travel, Frame H=8.5mm, Tail L=3.9mm, Knob type G with L=9mm, POM

Part Number (Part Description)	Product Details
SK-23D04-G 12	2P3T, 2mm travel, Frame H=8.5mm, Tail L=3.9mm, Knob type G with L=12mm, POM
SK-23D05-G 5	2P3T, 2mm travel, Frame H=5mm, Tail L=2.8mm, Knob type G with L=5mm, POM
SK-23D24-G 4	2P3T, 2mm travel, Frame H=8.5mm, Tail L=3.7mm, Knob type G with L=4mm, POM
SK-23D24-G 7	2P3T, 2mm travel, Frame H=8.5mm, Tail L=3.7mm, Knob type G with L=7mm, POM
SK-23D28-G 6 NS	2P3T, 2mm travel, Frame H=8.5mm, Tail L=3.3mm, Knob type G with L=6mm, POM, Non shorting
SK-23D44-G 9 K	2P3T, 2mm travel, Frame H=8.5mm, Tail L=3.9mm, Knob type G with L=9mm, POM, Non shorting between POS 1 & 2, shorting between POS 2 & 3
SK-24D24-CV 7 GY	2P4T, 2mm travel, Frame H=9.85mm, Tail L=3.7mm, Knob type CV with L=7mm, POM, Grey
SK-24D28-G 4 NS	2P4T, 2mm travel, Frame H=8.5mm, Tail L=3.3mm, Knob type G with L=4mm, POM, Non shorting
SK-24D28-G 6 NS	2P4T, 2mm travel, Frame H=8.5mm, Tail L=3.3mm, Knob type G with L=6mm, POM, Non shorting
SK-42D05-G 6 NS	4P2T, 2mm travel, Frame H=5mm, Tail L=2.7mm, Knob type G with L=6mm, POM, Non shorting
SK-12F17-G 7	1P2T, 3mm travel, Frame H=8mm, Tail L=3.3mm, Knob type G with L=7mm, PBT, Non shorting
SK-23F28-G 6 NS	2P3T, 3mm travel, Frame H=8.5mm, Tail L=3mm, Knob type G with L=6mm, POM, Non shorting
SK-24F28-G 6 NS	2P4T, 3mm travel, Frame H=8.5mm, Tail L=3mm, Knob type G with L=6mm, POM, Non shorting
SK-42F28-G 6 NS	4P2T, 3mm travel, Frame H=8.5mm, Tail L=3mm, Knob type G with L=6mm, POM, Non shorting
SK-12H04-G 6 NS PA	1P2T, 4mm travel, Frame H=8.5mm, Tail L=3.9mm, Knob type G with L=6mm, PA, Non shorting
SK-22H04-G 7 NS	2P2T, 4mm travel, Frame H=8.5mm, Tail L=3.9mm, Knob type G with L=7mm, POM, Non shorting
SK-22H04-G 9 NS	2P2T, 4mm travel, Frame H=8.5mm, Tail L=3.9mm, Knob type G with L=9mm, POM, Non shorting
SK-22H04-G 12 NS	2P2T, 4mm travel, Frame H=8.5mm, Tail L=3.9mm, Knob type G with L=12mm, POM, Non shorting
SK-22H24-G 4 NS	2P2T, 4mm travel, Frame H=8.5mm, Tail L=3.7mm, Knob type G with L=4mm, POM, Non shorting
SK-22H24-G 5 NS	2P2T, 4mm travel, Frame H=8.5mm, Tail L=3.7mm, Knob type G with L=5mm, POM, Non shorting
SK-22H24-G 6 NS	2P2T, 4mm travel, Frame H=8.5mm, Tail L=3.7mm, Knob type G with L=6mm, POM, Non shorting

2MM TRAVEL

SK-12D04-G 3 NS 1P2T NON-SHORTING 3MM KNOB
SK-12D04-VG 3 NS 1P2T NON-SHORTING 3MM KNOB (VG)

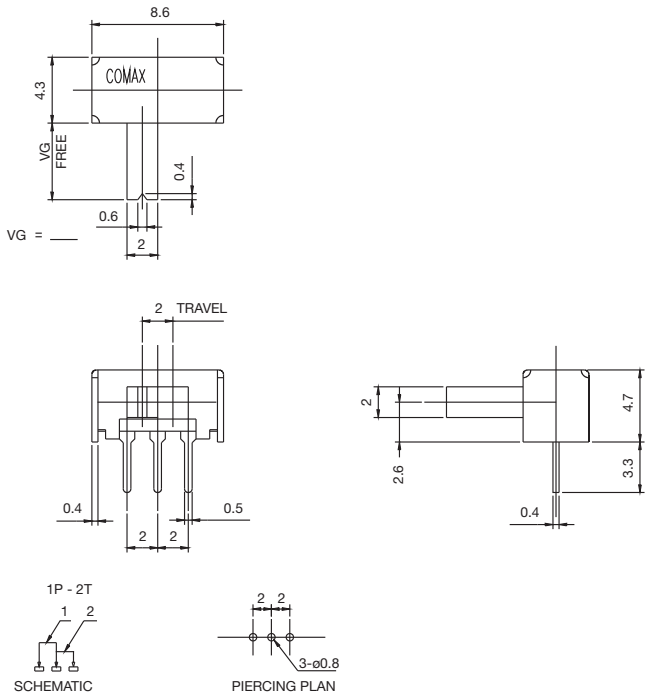

G knob style

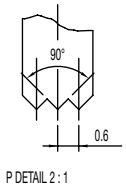

Specifications

CONTACT RATING: 0.3A @ 30 VDC
INITIAL CONTACT RESISTANCE: 30 m ohms max.
INSULATION RESISTANCE: 100 M ohms min.
DIELECTRIC STRENGTH: 500 V AC (50-60 Hz) between open terminals and between the frame and terminal.
OPERATING LIFE: 10,000 cycles with load
OPERATING FORCE: 250 ± 100 gf (2.45 ± 0.98N)
TRAVEL: 2 ± 0.3 mm
OPERATING TEMPERATURE: -20˚C to 70˚C

Materials

KNOB: POM
FRAME: SPCC
CONTACT: Silver clad
TERMINAL: Silver plated

SK Series
Miniature Slide Switches - Side Knob

SK-12D07-G 5 NS PA 1P2T NON-SHORTING 5MM KNOB

SK-12D07-G 6 NS PA 1P2T NON-SHORTING 6MM KNOB

SK-12D07-VG 4 NS PA 1P2T NON-SHORTING 4MM KNOB (VG)

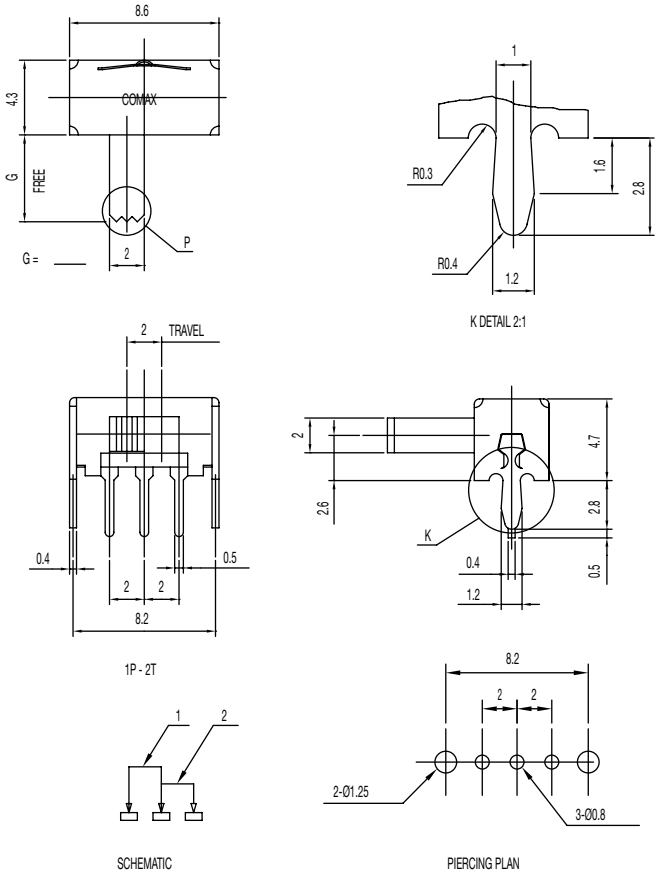

G knob style

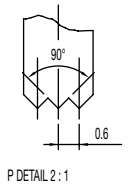

VG knob style

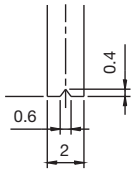

Specifications

CONTACT RATING: 0.3A @ 30 VDC

INITIAL CONTACT RESISTANCE: 30 m ohms max.

INSULATION RESISTANCE: 100 M ohms min.

DIELECTRIC STRENGTH: 500 V AC (50-60 Hz) between open terminals and between the frame and terminal.

OPERATING LIFE: 10,000 cycles with load

OPERATING FORCE: 250 ± 100 gf (2.45 ± 0.98N)

TRAVEL: 2 ± 0.3 mm

OPERATING TEMPERATURE: -20˚C to 70˚C

Materials

KNOB: PA

FRAME: SPCC

CONTACT: Silver clad

TERMINAL: Silver plated

SK-12D07-VG 4 NS PA LT IP2T NON-SHORTING 4MM KNOB (VG)

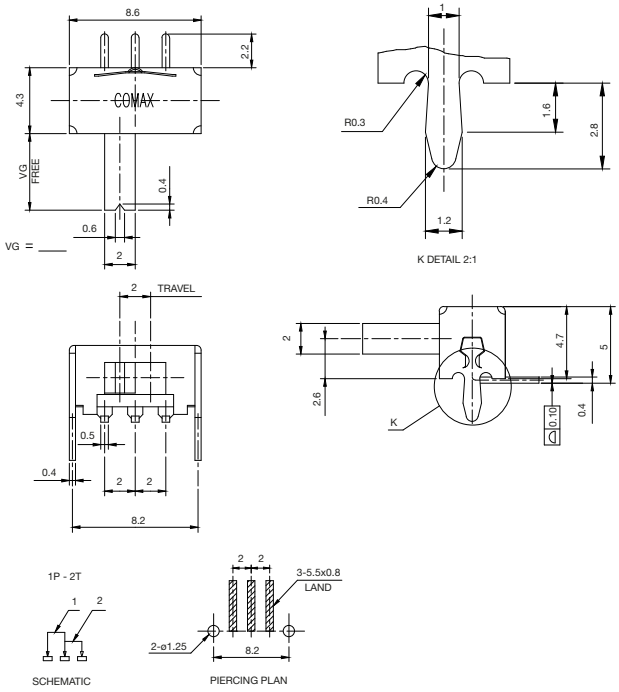

Specifications

CONTACT RATING: 0.3A @ 30 VDC

INITIAL CONTACT RESISTANCE: 30 m ohms max.

INSULATION RESISTANCE: 100 M ohms min.

DIELECTRIC STRENGTH: 500 V AC (50-60 Hz) between open terminals and between the frame and terminal.

OPERATING LIFE: 10,000 cycles with load

OPERATING FORCE: 250 ± 100 gf (2.45 ± 0.98N)

TRAVEL: 2 ± 0.3 mm

OPERATING TEMPERATURE: -30˚C to 80˚C

Materials

KNOB: PA

FRAME: SPCC

CONTACT: Silver clad

TERMINAL: Silver plated

Packaging: Tape & Reel

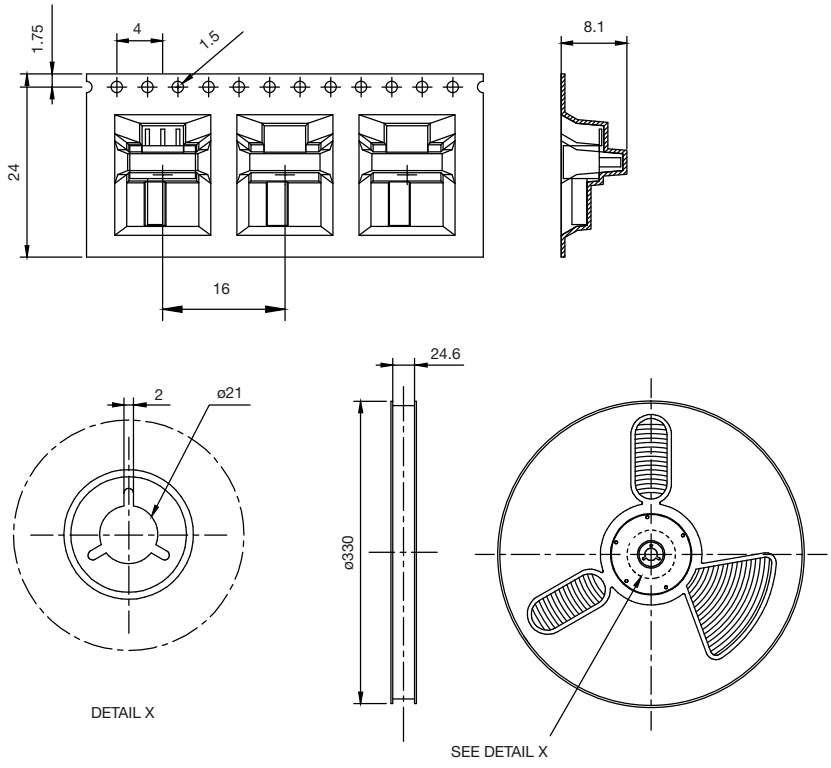

Total 400 pcs per reel

SK Series
Miniature Slide Switches - Side Knob

SK-12D26-G 6.5 NS 1P2T NON-SHORTING 6.5MM KNOB
SK-12D26-G 6.5 NS GY 1P2T NON-SHORTING 6.5MM KNOB

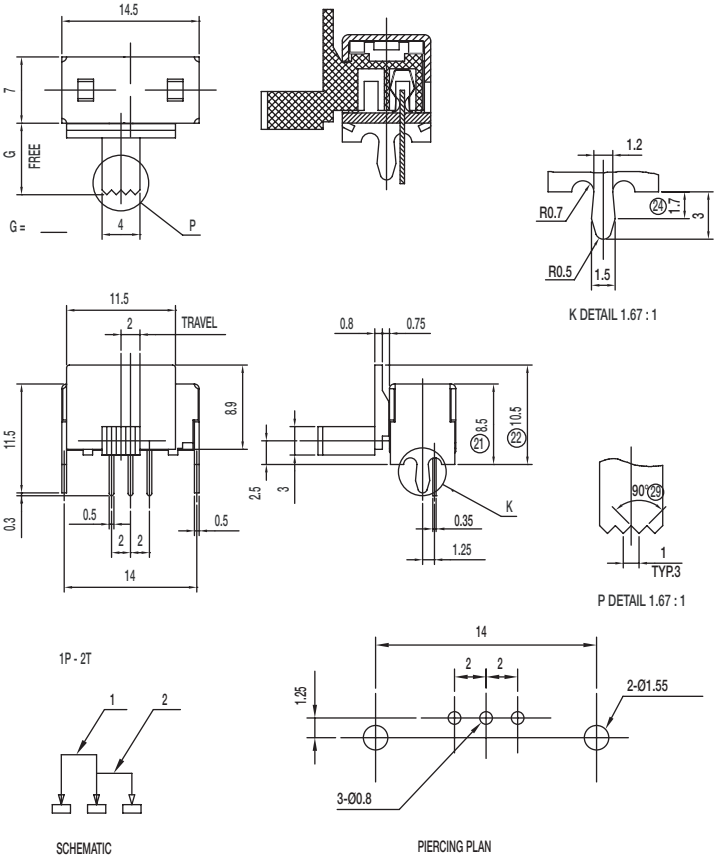

Specifications

CONTACT RATING: 0.3A @ 30 VDC

INITIAL CONTACT RESISTANCE: 20 m ohms max.

INSULATION RESISTANCE: 500 M ohms min.

DIELECTRIC STRENGTH: 500 V AC (50-60 Hz) between open terminals and between the frame and terminal.

OPERATING LIFE: 10,000 cycles with load

OPERATING FORCE: 250 ± 100 gf (2.45 ± 0.98N)

TRAVEL: 2 ± 0.3 mm

OPERATING TEMPERATURE: -20˚C to 70˚C

Materials

KNOB: POM for **SK-12D26-G 6.5 NS**

POM (GY = Grey) for **SK-12D26-G 6.5 NS GY**

FRAME: SPCC

CONTACT: Silver clad

TERMINAL: Silver plated

SK-13D16-VG 5 PA 1P3T 5MM KNOB

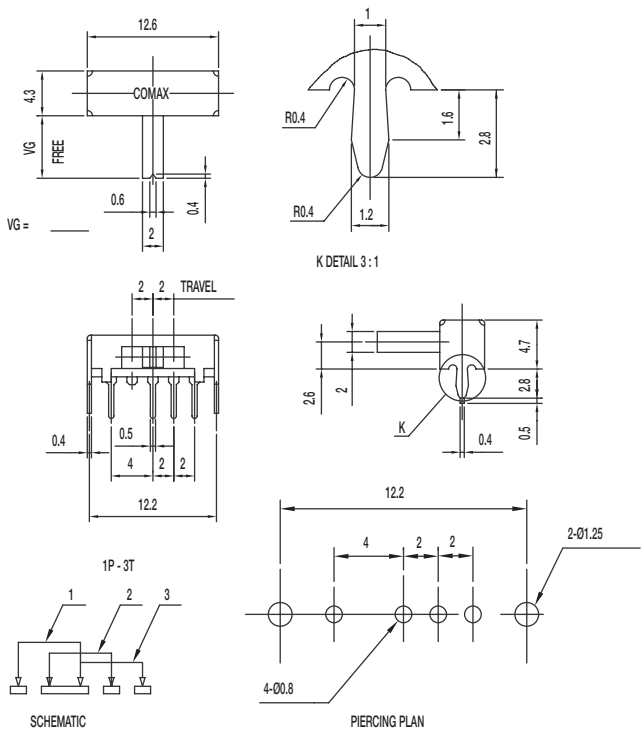

Specifications

CONTACT RATING: 0.3A @ 30 VDC

INITIAL CONTACT RESISTANCE: 30 m ohms max.

INSULATION RESISTANCE: 100 M ohms min.

DIELECTRIC STRENGTH: 500 V AC (50-60 Hz) between open terminals and between the frame and terminal.

OPERATING LIFE: 10,000 cycles with load

OPERATING FORCE: 200 ± 100 gf (1.96 ± 0.98N)

250 ± 100 gf (2.45 ± 0.98N)

TRAVEL: 2 ± 0.3 mm

OPERATING TEMPERATURE: -20˚C to 70˚C

Materials

KNOB: PA

FRAME: SPCC

CONTACT: Silver clad

TERMINAL: Silver plated

SK-13D37-G 6 NS 1P3T NON-SHORTING 6MM KNOB

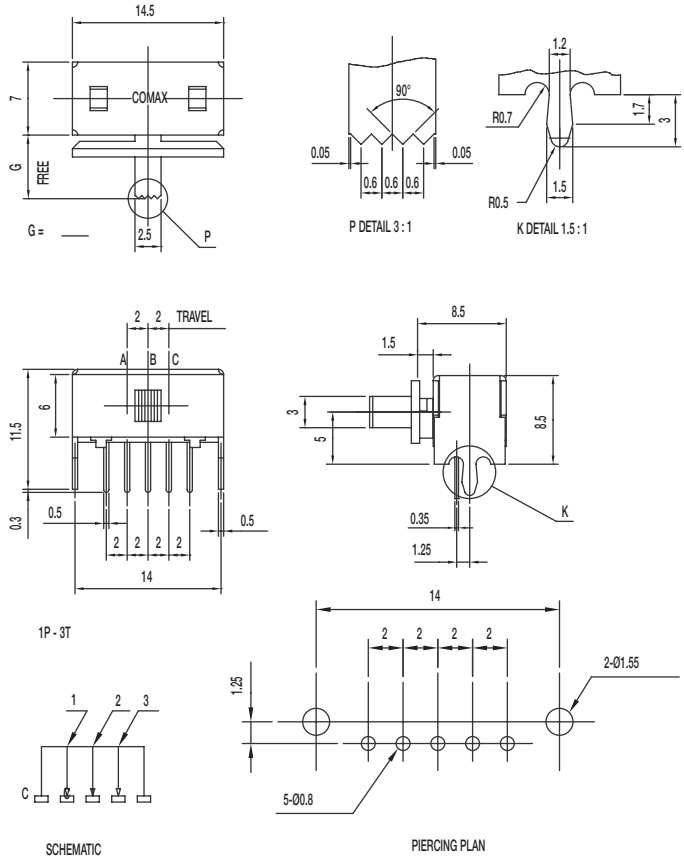

Specifications

CONTACT RATING: 0.3A @ 30 VDC
INITIAL CONTACT RESISTANCE: 30 m ohms max.
INSULATION RESISTANCE: 100 M ohms min.
DIELECTRIC STRENGTH: 500 V AC (50-60 Hz) between open terminals and between the frame and terminal.
OPERATING LIFE: 10,000 cycles with load
OPERATING FORCE: 200 ± 100 gf (1.96 ± 0.98N)
300 ± 150 gf (2.94 ± 1.47N)
TRAVEL: 2 ± 0.3 mm
OPERATING TEMPERATURE: -20˚C to 70˚C

Materials

KNOB: POM
FRAME: SPCC
CONTACT: Silver clad
TERMINAL: Silver plated

SK-14D01-G 6 1P4T 6MM KNOB

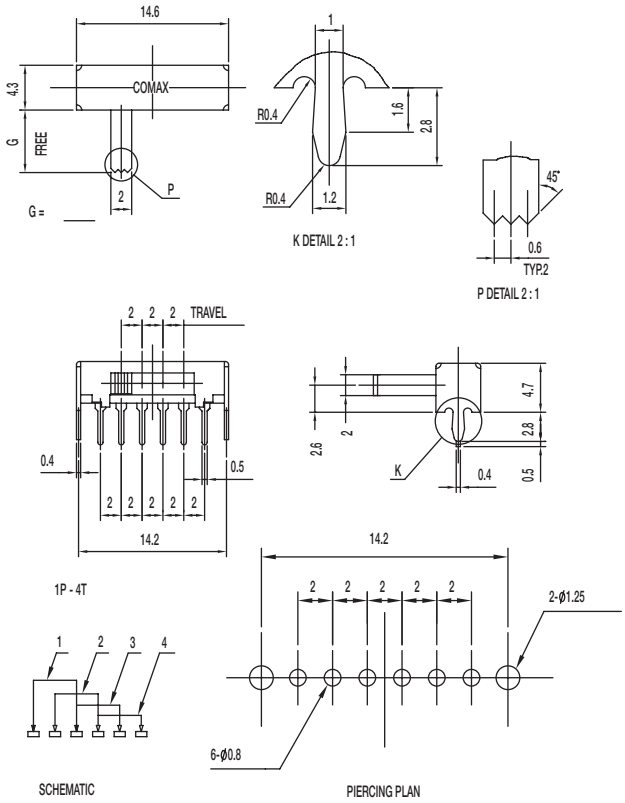

Specifications

CONTACT RATING: 0.3A @ 30 VDC
INITIAL CONTACT RESISTANCE: 30 m ohms max.
INSULATION RESISTANCE: 100 M ohms min.
DIELECTRIC STRENGTH: 500 V AC (50-60 Hz) between open terminals and between the frame and terminal.
OPERATING LIFE: 10,000 cycles with load
OPERATING FORCE: 200 ± 100 gf (1.96 ± 0.98N)
250 ± 100 gf (2.45 ± 0.98N)
TRAVEL: 2 ± 0.3 mm
OPERATING TEMPERATURE: -20˚C to 70˚C

Materials

KNOB: POM
FRAME: SPCC
CONTACT: Silver clad
TERMINAL: Silver plated

SK-22D01-MG 5 NS DPDT NON-SHORTING 5MM KNOB

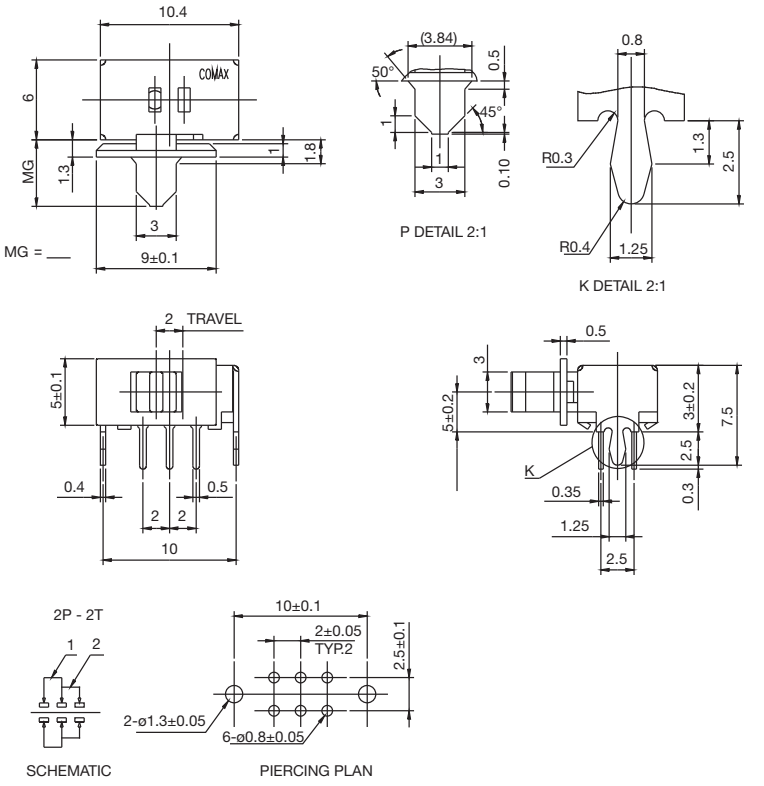

Specifications

CONTACT RATING: 0.3A @ 30 VDC
INITIAL CONTACT RESISTANCE: 30 m ohms max.
INSULATION RESISTANCE: 100 M ohms min.
DIELECTRIC STRENGTH: 500 V AC (50-60 Hz) between open terminals and between the frame and terminal.
OPERATING LIFE: 10,000 cycles with load
OPERATING FORCE: 250 ± 100 gf (2.45 ± 0.98N)
TRAVEL: 2 ± 0.3 mm
OPERATING TEMPERATURE: -20˚C to 70˚C

Materials

KNOB: POM
FRAME: SPCC
CONTACT: Silver clad
TERMINAL: Silver plated

SK-22D05-G 4 NS DPDT NON-SHORTING 4MM KNOB

SK-22D05-G 6 NS DPDT NON-SHORTING 6MM KNOB

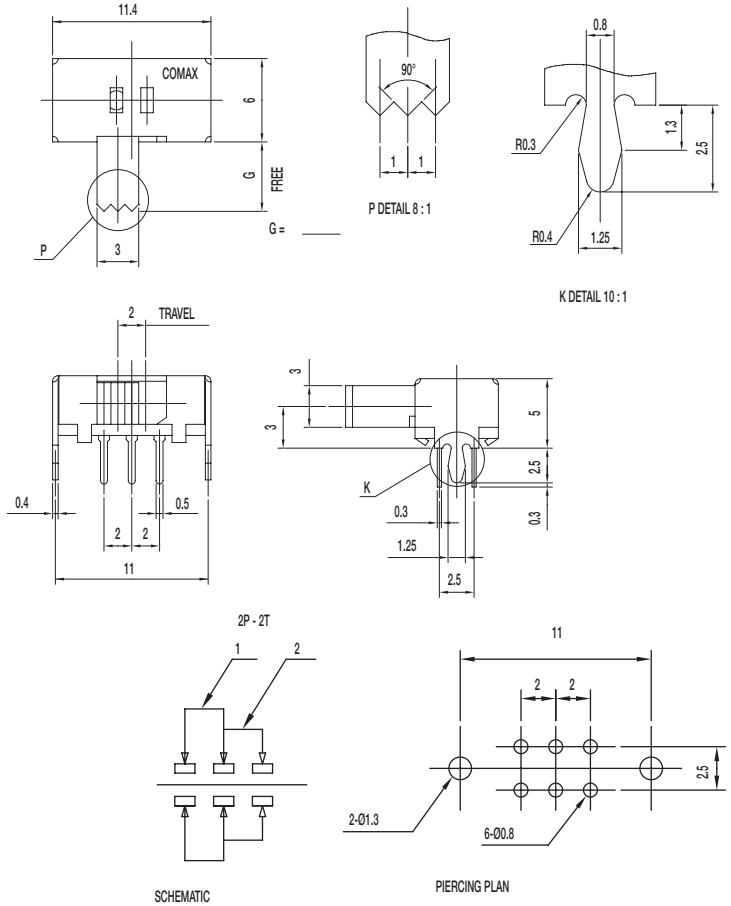

Specifications

CONTACT RATING: 0.3A @ 30 VDC
INITIAL CONTACT RESISTANCE: 30 m ohms max.
INSULATION RESISTANCE: 100 M ohms min.
DIELECTRIC STRENGTH: 500 V AC (50-60 Hz) between open terminals and between the frame and terminal.
OPERATING LIFE: 10,000 cycles with load
OPERATING FORCE: 250 ± 100 gf (2.45 ± 0.98N)
TRAVEL: 2 ± 0.3 mm
OPERATING TEMPERATURE: -20˚C to 70˚C

Materials

KNOB: POM
FRAME: SPCC
CONTACT: Silver clad
TERMINAL: Silver plated

SK-22D06-SG 5 NS DPDT NON-SHORTING 5MM
SK-22D06-SG 6 NS DPDT NON-SHORTING 6MM

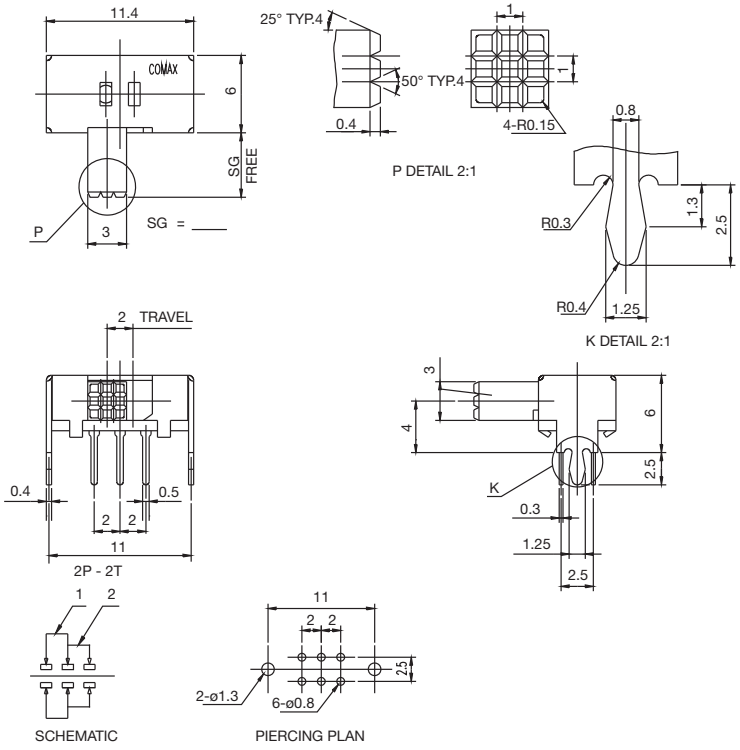

Specifications

CONTACT RATING: 0.3A @ 30 VDC
INITIAL CONTACT RESISTANCE: 30 m ohms max.
INSULATION RESISTANCE: 100 M ohms min.
DIELECTRIC STRENGTH: 500 V AC (50-60 Hz) between open terminals and between the frame and terminal.
OPERATING LIFE: 10,000 cycles with load
OPERATING FORCE: 250 ± 100 gf (2.45 ± 0.98N)
TRAVEL: 2 ± 0.3 mm
OPERATING TEMPERATURE: -20˚C to 70˚C

Materials

KNOB: POM
FRAME: SPCC
CONTACT: Silver clad
TERMINAL: Silver plated

SK-22D07-G 4 NS PA DPDT NON-SHORTING 4MM KNOB
SK-22D07-VG 4 NS PA DPDT NON-SHORTING 4MM KNOB (VG)

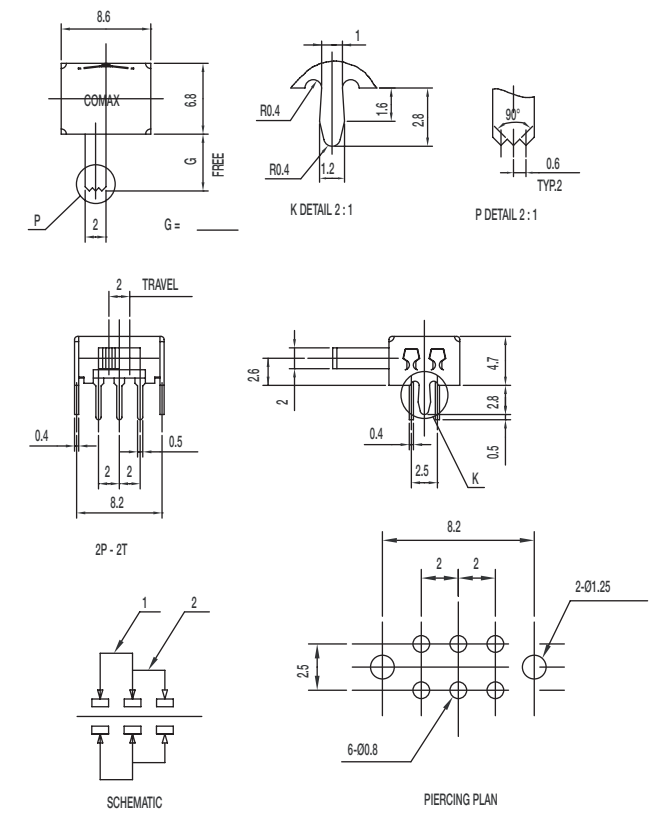

Specifications

CONTACT RATING: 0.3A @ 30 VDC
INITIAL CONTACT RESISTANCE: 30 m ohms max.
INSULATION RESISTANCE: 100 M ohms min.
DIELECTRIC STRENGTH: 500 V AC (50-60 Hz) between open terminals and between the frame and terminal.
OPERATING LIFE: 10,000 cycles with load
OPERATING FORCE: 250 ± 100 gf (2.45 ± 0.98N)
TRAVEL: 2 ± 0.3 mm
OPERATING TEMPERATURE: -20˚C to 70˚C

Materials

KNOB: PA (UL94V-0)
FRAME: SPCC
CONTACT: Silver clad
TERMINAL: Silver plated

VG knob style

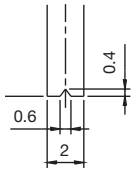

SK-22D21-G 5 NS DPDT NON-SHORTING 5MM KNOB

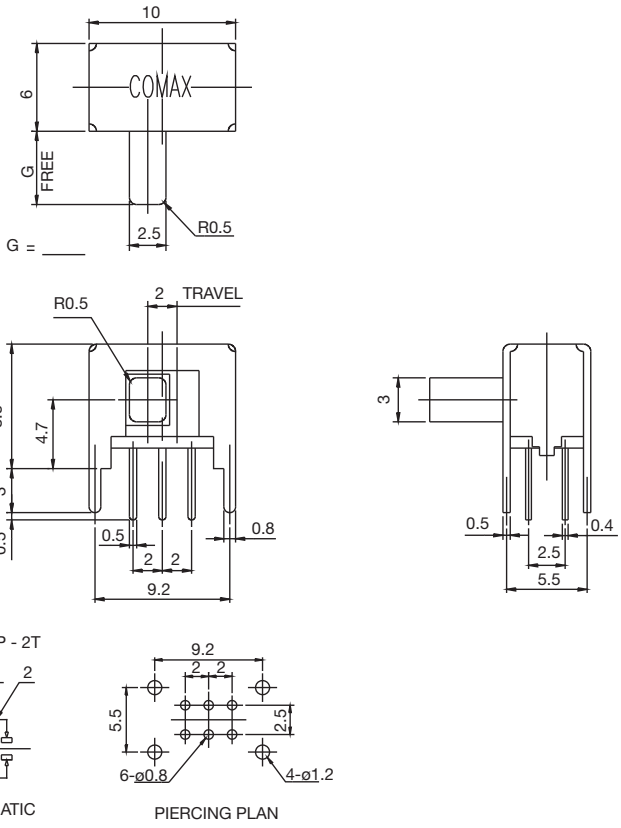

Specifications

CONTACT RATING: 0.3A @ 30 VDC
INITIAL CONTACT RESISTANCE: 30 m ohms max.
INSULATION RESISTANCE: 100 M ohms min.
DIELECTRIC STRENGTH: 500 V AC (50-60 Hz) between open terminals and between the frame and terminal.
OPERATING LIFE: 10,000 cycles with load
OPERATING FORCE: 300 ± 150 gf (2.94 ± 1.47N)
TRAVEL: 2 ± 0.3 mm
OPERATING TEMPERATURE: -20˚C to 70˚C

Materials

KNOB: POM
FRAME: SPCC
CONTACT: Silver clad
TERMINAL: Silver plated

SK-22D28-G 6 NS DPDT NON-SHORTING 6MM KNOB

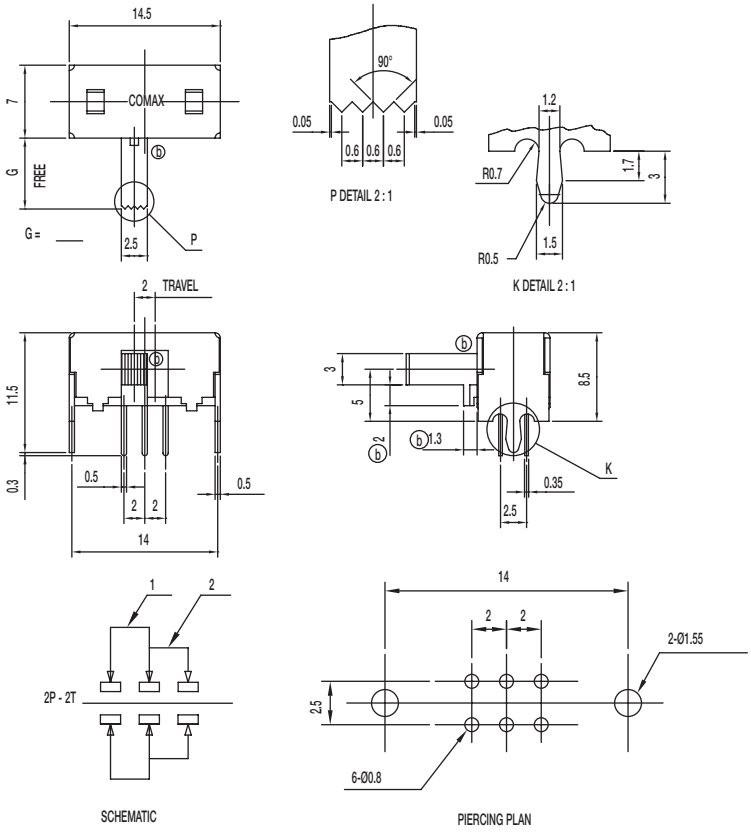

Specifications

CONTACT RATING: 0.3A @ 30 VDC
INITIAL CONTACT RESISTANCE: 30 m ohms max.
INSULATION RESISTANCE: 100 M ohms min.
DIELECTRIC STRENGTH: 500 V AC (50-60 Hz) between open terminals and between the frame and terminal.
OPERATING LIFE: 10,000 cycles with load
OPERATING FORCE: 200 ± 100 gf (1.96 ± 0.98N)
TRAVEL: 2 ± 0.3 mm
OPERATING TEMPERATURE: -20˚C to 70˚C

Materials

KNOB: POM
FRAME: SPCC
CONTACT: Silver clad
TERMINAL: Silver plated

SK-22D37-SG 6 NS PA DPDT NON-SHORTING 6MM KNOB

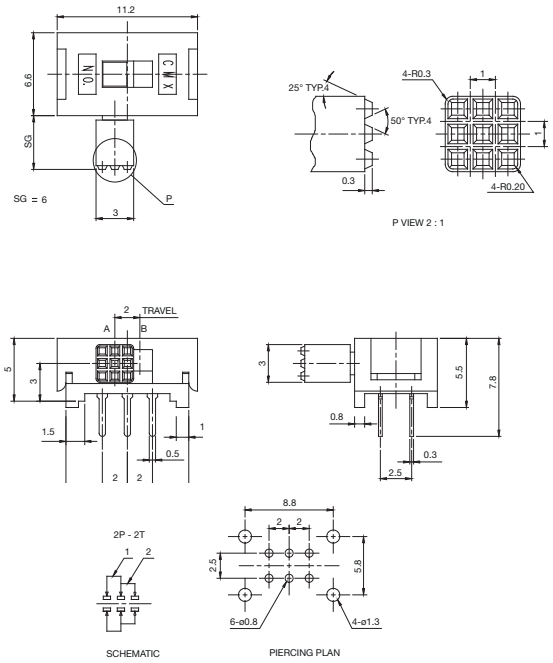

Specifications

CONTACT RATING: 0.3A @ 30 VDC

INITIAL CONTACT RESISTANCE: 30 m ohms max.

INSULATION RESISTANCE: 100 M ohms min.

DIELECTRIC STRENGTH: 500 V AC (50-60 Hz) between open terminals and between the frame and terminal.

OPERATING LIFE: 10,000 cycles with load

OPERATING FORCE: 200 ± 100 gf (1.96 ± 0.98N)

TRAVEL: 2 ± 0.3 mm

OPERATING TEMPERATURE: -20˚C to 70˚C

Materials

KNOB: PA

FRAME: SPCC

CONTACT: Silver clad

TERMINAL: Silver plated

SK-23D04-G 9 2P3T 9MM KNOB

SK-23D04-G 12 2P3T 12MM KNOB

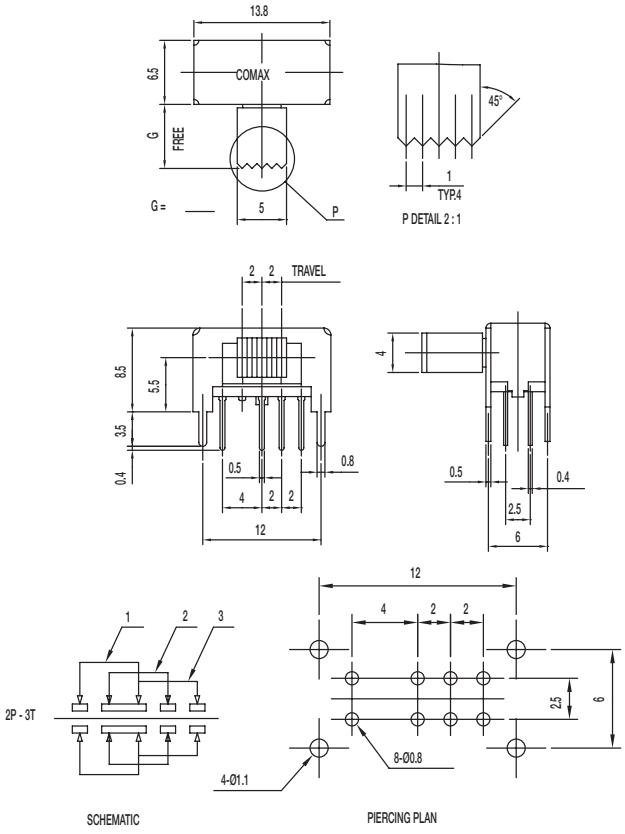

Specifications

CONTACT RATING: 0.3A @ 30 VDC

INITIAL CONTACT RESISTANCE: 30 m ohms max.

INSULATION RESISTANCE: 100 M ohms min.

DIELECTRIC STRENGTH: 500 V AC (50-60 Hz) between open terminals and between the frame and terminal.

OPERATING LIFE: 10,000 cycles with load

OPERATING FORCE: 200 ± 100 gf (1.96 ± 0.98N)
300 ± 150 gf (2.94 ± 1.47N)

TRAVEL: 2 ± 0.3 mm

OPERATING TEMPERATURE: -20˚C to 70˚C

Materials

KNOB: POM

FRAME: SPCC

CONTACT: Silver clad

TERMINAL: Silver plated

SK-23D05-G 5 2P3T 5MM KNOB

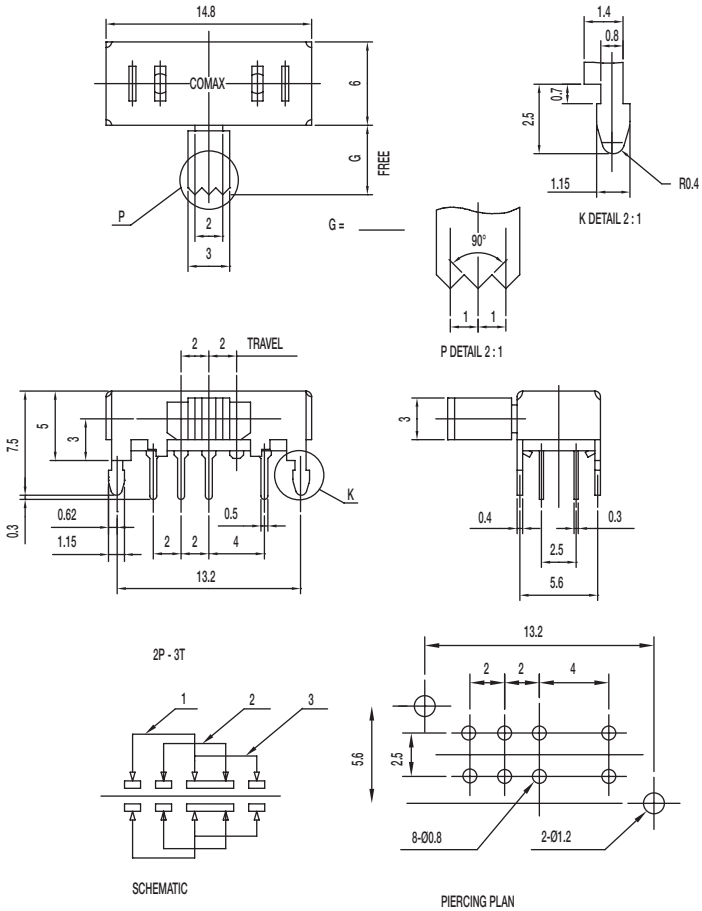

Specifications

CONTACT RATING: 0.3A @ 30 VDC

INITIAL CONTACT RESISTANCE: 30 m ohms max.

INSULATION RESISTANCE: 100 M ohms min.

DIELECTRIC STRENGTH: 500 V AC (50-60 Hz) between open terminals and between the frame and terminal.

OPERATING LIFE: 10,000 cycles with load

OPERATING FORCE: 200 ± 100 gf (1.96 ± 0.98N)
250 ± 100 gf (2.45 ± 0.98N)

TRAVEL: 2 ± 0.3 mm

OPERATING TEMPERATURE: -20˚C to 70˚C

Materials

KNOB: POM

FRAME: SPCC

CONTACT: Silver clad

TERMINAL: Silver plated

SK-23D24-G 4 2P3T 4MM KNOB

SK-23D24-G 7 2P3T 7MM KNOB

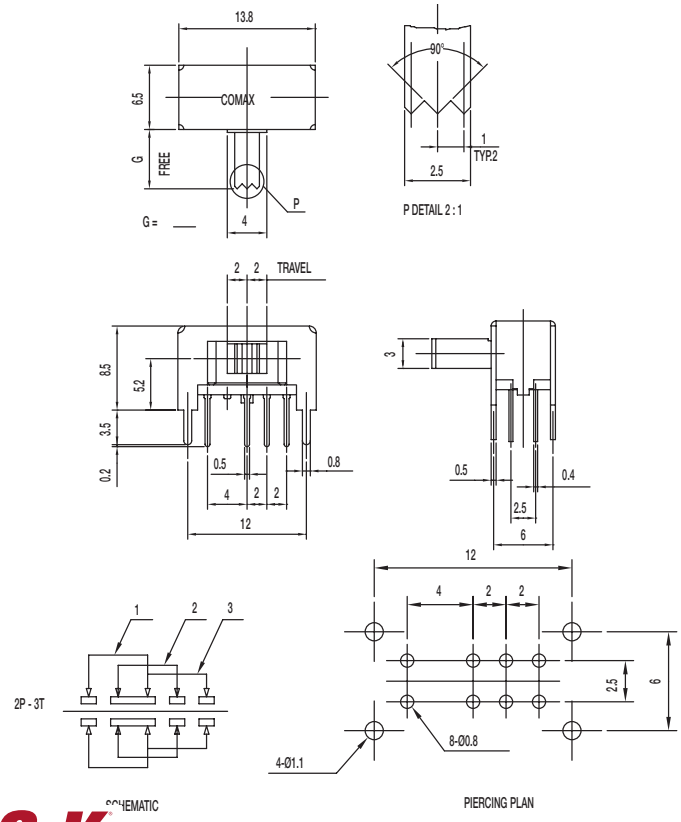

Specifications

CONTACT RATING: 0.3A @ 30 VDC

INITIAL CONTACT RESISTANCE: 30 m ohms max.

INSULATION RESISTANCE: 100 M ohms min.

DIELECTRIC STRENGTH: 500 V AC (50-60 Hz) between open terminals and between the frame and terminal.

OPERATING LIFE: 10,000 cycles with load

OPERATING FORCE: 200 ± 100 gf (1.96 ± 0.98N)
300 ± 150 gf (2.94 ± 1.47N)

TRAVEL: 2 ± 0.3 mm

OPERATING TEMPERATURE: -20˚C to 70˚C

Materials

KNOB: POM

FRAME: SPCC

CONTACT: Silver clad

TERMINAL: Silver plated

SK-23D28-G 6 NS 2P3T NON-SHORTING 6MM KNOB

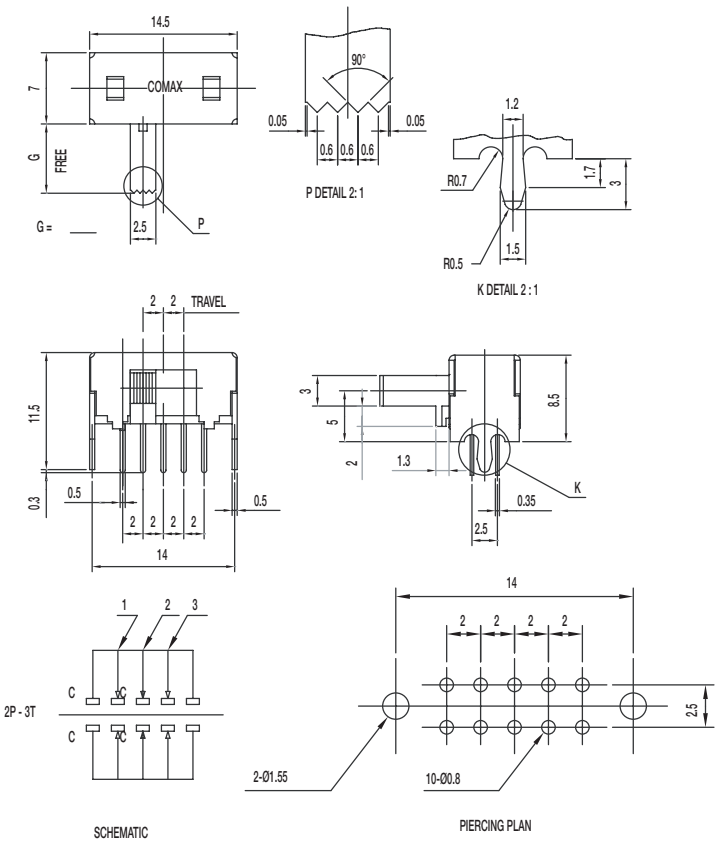

Specifications

CONTACT RATING: 0.3A @ 30 VDC

INITIAL CONTACT RESISTANCE: 30 m ohms max.

INSULATION RESISTANCE: 100 M ohms min.

DIELECTRIC STRENGTH: 500 V AC (50-60 Hz) between open terminals and between the frame and terminal.

OPERATING LIFE: 10,000 cycles with load

OPERATING FORCE: 200 ± 100 gf (1.96 ± 0.98N)
300 ± 150 gf (2.94 ± 1.47N)

TRAVEL: 2 ± 0.3 mm

OPERATING TEMPERATURE: -20˚C to 70˚C

Materials

KNOB: POM

FRAME: SPCC

CONTACT: Silver clad

TERMINAL: Silver plated

SK-23D44-G 9 K 2P3T 9MM KNOB

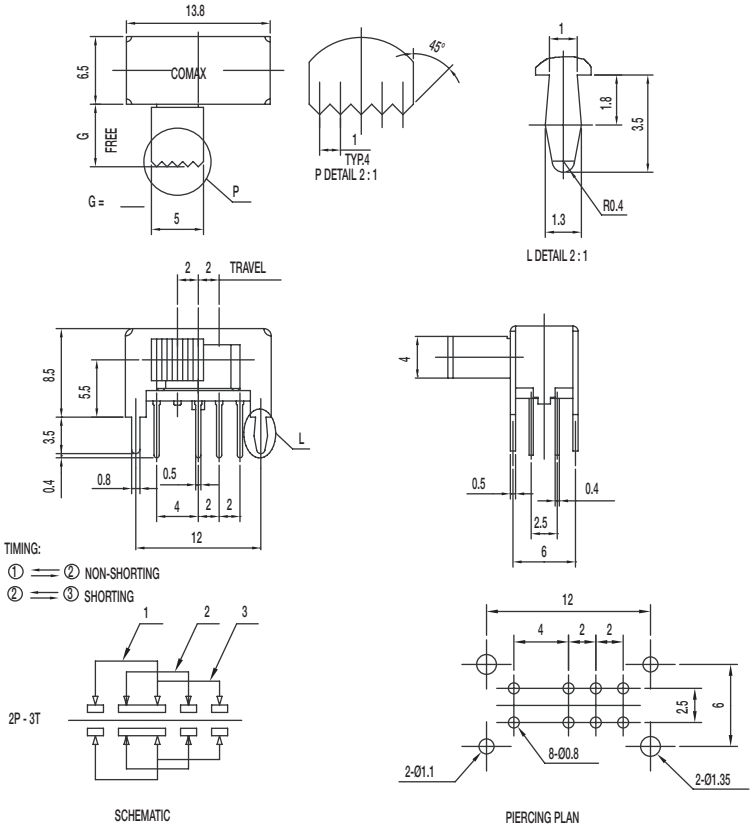

Specifications

CONTACT RATING: 0.3A @ 30 VDC

INITIAL CONTACT RESISTANCE: 30 m ohms max.

INSULATION RESISTANCE: 100 M ohms min.

DIELECTRIC STRENGTH: 500 V AC (50-60 Hz) between open terminals and between the frame and terminal.

OPERATING LIFE: 10,000 cycles with load

OPERATING FORCE: 250 ± 150 gf (2.45 ± 1.47N)
300 ± 150 gf (2.94 ± 1.47N)

TRAVEL: 2 ± 0.3 mm

OPERATING TEMPERATURE: -20˚C to 70˚C

Materials

KNOB: POM

FRAME: SPCC

CONTACT: Silver clad

TERMINAL: Silver plated

SK-24D24-CV 7 GY 2P3T 7MM KNOB

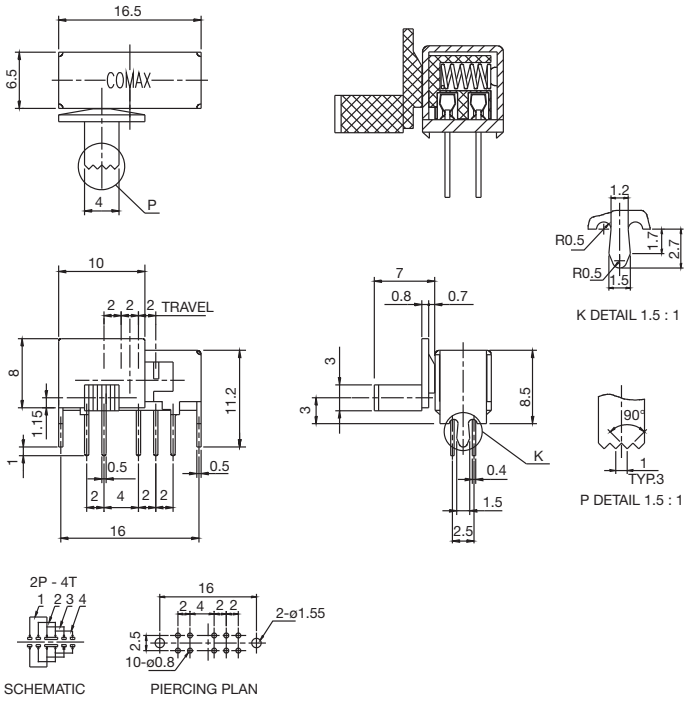

Specifications

CONTACT RATING: 0.3A @ 30 VDC

INITIAL CONTACT RESISTANCE: 30 m ohms max.

INSULATION RESISTANCE: 100 M ohms min.

DIELECTRIC STRENGTH: 500 V AC (50-60 Hz) between open terminals and between the frame and terminal.

OPERATING LIFE: 10,000 cycles with load

OPERATING FORCE: 200 ± 100 gf (1.96 ± 0.98N)
250 ± 100 gf (2.45 ± 0.98N)

TRAVEL: 2 ± 0.3 mm

OPERATING TEMPERATURE: -20˚C to 70˚C

Materials

KNOB: POM

FRAME: SPCC

CONTACT: Silver clad

TERMINAL: Silver plated

SK-24D28-G 4 NS 2P4T NON-SHORTING 4MM KNOB

SK-24D28-G 6 NS 2P4T NON-SHORTING 6MM KNOB

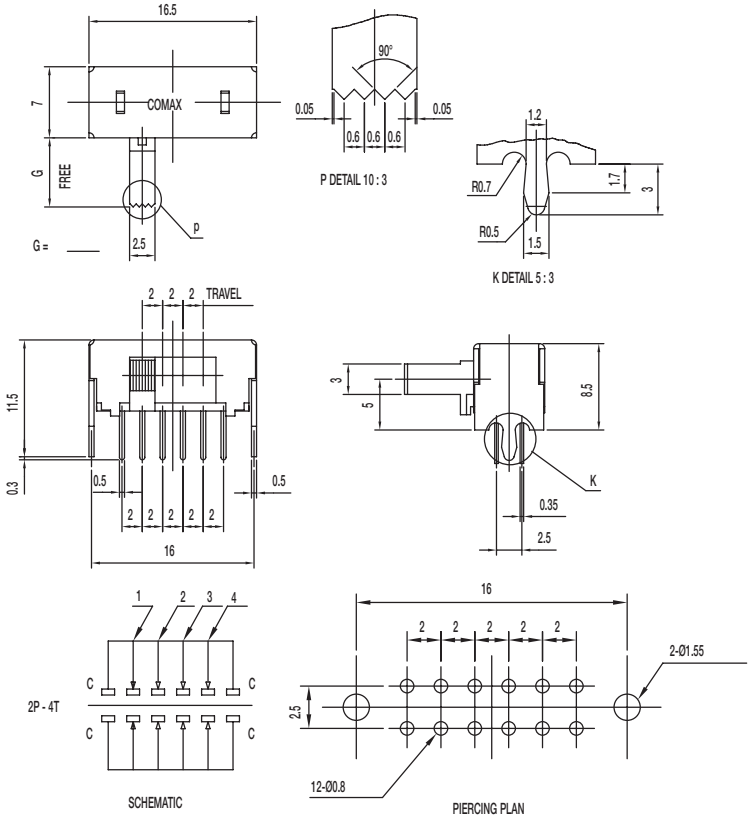

Specifications

CONTACT RATING: 0.3A @ 30 VDC

INITIAL CONTACT RESISTANCE: 30 m ohms max.

INSULATION RESISTANCE: 100 M ohms min.

DIELECTRIC STRENGTH: 500 V AC (50-60 Hz) between open terminals and between the frame and terminal.

OPERATING LIFE: 10,000 cycles with load

OPERATING FORCE: 200 ± 100 gf (1.96 ± 0.98N)
250 ± 100 gf (2.45 ± 0.98N); 300 ± 150 gf (2.94 ± 1.47N)

TRAVEL: 2 ± 0.3 mm

OPERATING TEMPERATURE: -20˚C to 70˚C

Materials

KNOB: POM

FRAME: SPCC

CONTACT: Silver clad

TERMINAL: Silver plated

SK-42D05-G 6 NS 4P2T NON-SHORTING 6MM KNOB

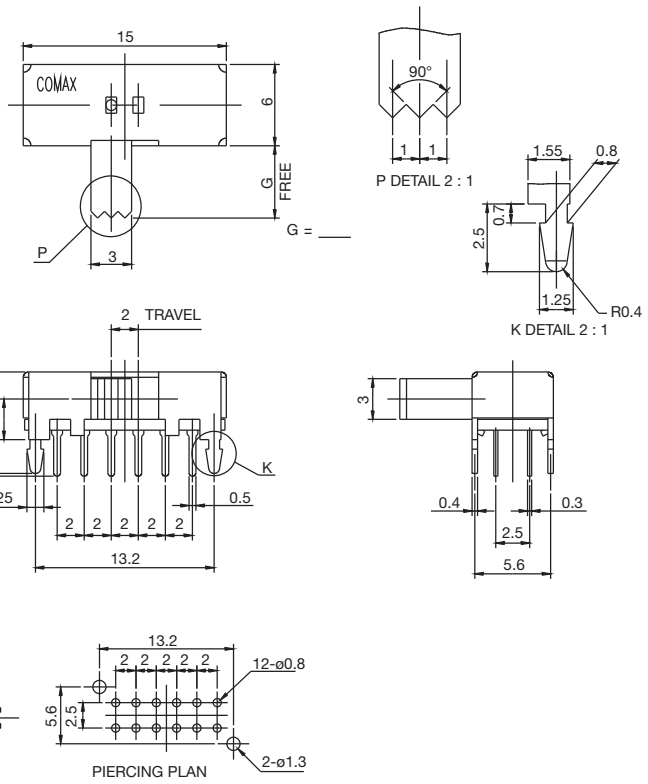

Specifications

CONTACT RATING: 0.3A @ 30 VDC
INITIAL CONTACT RESISTANCE: 30 m ohms max.
INSULATION RESISTANCE: 100 M ohms min.
DIELECTRIC STRENGTH: 500 V AC (50-60 Hz) between open terminals and between the frame and terminal.
OPERATING LIFE: 10,000 cycles with load
OPERATING FORCE: 250 ± 100 gf (2.45 ± 0.98N)
TRAVEL: 2 ± 0.3 mm
OPERATING TEMPERATURE: -20˚C to 70˚C

Materials

KNOB: POM
FRAME: SPCC
CONTACT: Silver clad
TERMINAL: Silver plated

3MM TRAVEL

SK-12F17-G 7 1P2T NON-SHORTING 7MM KNOB

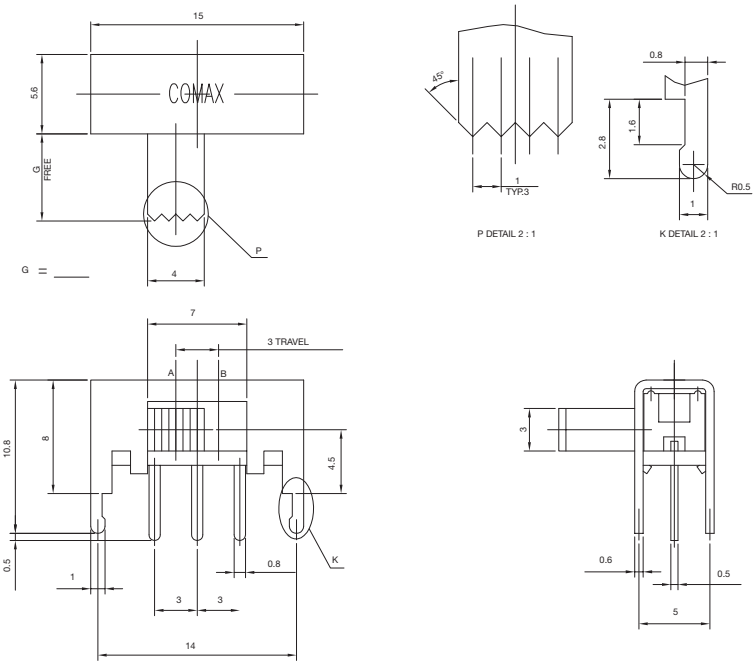

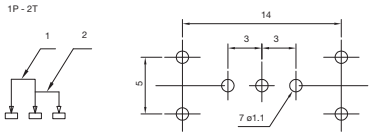

Specifications

CONTACT RATING: 0.3A @ 30 VDC
INITIAL CONTACT RESISTANCE: 30 m ohms max.
INSULATION RESISTANCE: 100 M ohms min.
DIELECTRIC STRENGTH: 500 V AC (50-60 Hz) between open terminals and between the frame and terminal.
OPERATING LIFE: 10,000 cycles with load
OPERATING FORCE: 250 ± 100 gf (2.45 ± 0.98N)
TRAVEL: 3 ± 0.3 mm
OPERATING TEMPERATURE: -20˚C to 70˚C

Materials

KNOB: PBT
FRAME: SPCC
CONTACT: Silver clad
TERMINAL: Silver plated

SK-23F28-G 6 NS 2P3T NON-SHORTING 6MM KNOB

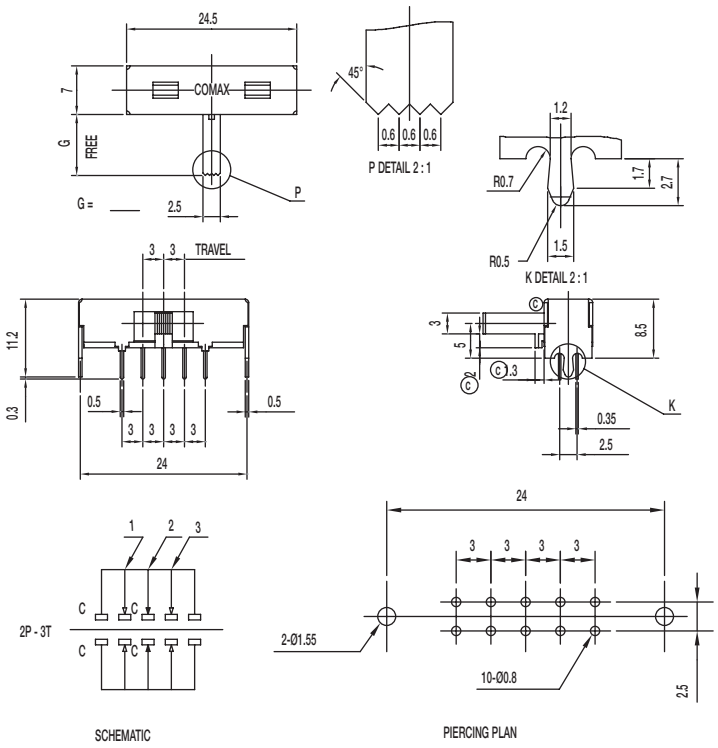

Specifications

CONTACT RATING: 0.3A @ 30 VDC

INITIAL CONTACT RESISTANCE: 30 m ohms max.

INSULATION RESISTANCE: 100 M ohms min.

DIELECTRIC STRENGTH: 500 V AC (50-60 Hz) between open terminals and between the frame and terminal.

OPERATING LIFE: 10,000 cycles with load

OPERATING FORCE: 150 ± 80 gf (1.47 ± 0.78N)
200 ± 100 gf (1.96 ± 0.98N)

TRAVEL: 3 ± 0.3 mm

OPERATING TEMPERATURE: -20˚C to 70˚C

Materials

KNOB: POM

FRAME: SPCC

CONTACT: Silver clad

TERMINAL: Silver plated

SK-24F28-G 6 NS 2P4T NON-SHORTING 6MM KNOB

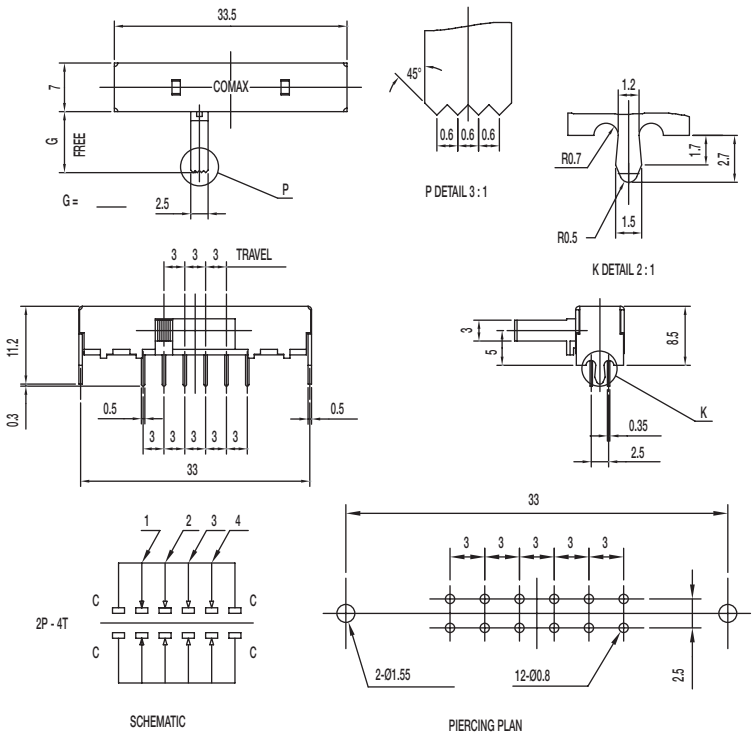

Specifications

CONTACT RATING: 0.3A @ 30 VDC

INITIAL CONTACT RESISTANCE: 30 m ohms max.

INSULATION RESISTANCE: 100 M ohms min.

DIELECTRIC STRENGTH: 500 V AC (50-60 Hz) between open terminals and between the frame and terminal.

OPERATING LIFE: 10,000 cycles with load

OPERATING FORCE: 200 ± 100 gf (1.96 ± 0.98N)
250 ± 100 gf (2.45 ± 0.98N)

TRAVEL: 3 ± 0.3 mm

OPERATING TEMPERATURE: -20˚C to 70˚C

Materials

KNOB: POM

FRAME: SPCC

CONTACT: Silver clad

TERMINAL: Silver plated

SK-42F28-G 6 NS 2P4T NON-SHORTING 6MM KNOB

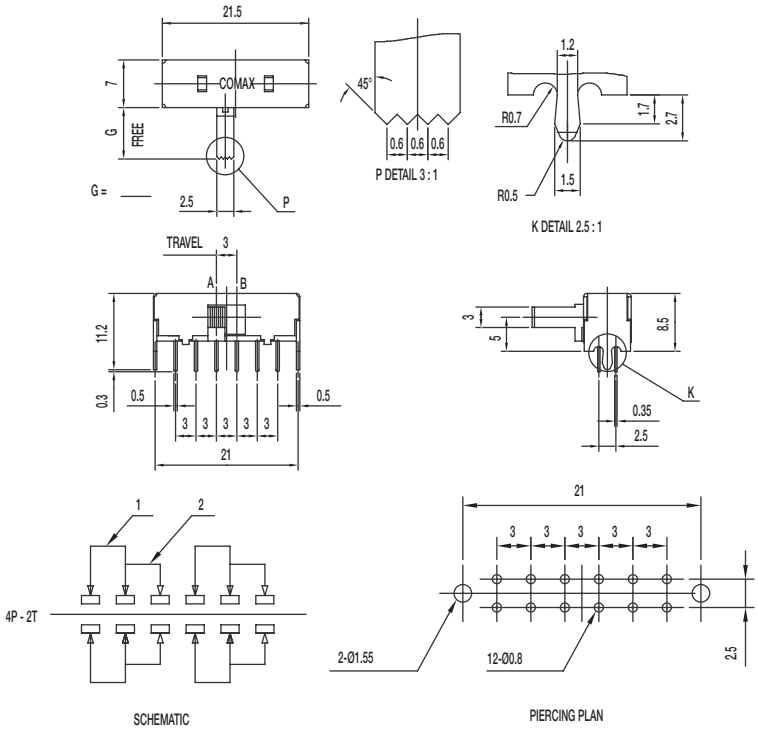

Specifications

CONTACT RATING: 0.3A @ 30 VDC

INITIAL CONTACT RESISTANCE: 30 m ohms max.

INSULATION RESISTANCE: 100 M ohms min.

DIELECTRIC STRENGTH: 500 V AC (50-60 Hz) between open terminals and between the frame and terminal.

OPERATING LIFE: 10,000 cycles with load

OPERATING FORCE: 200 ± 100 gf (1.96 ± 0.98N)
250 ± 100 gf (2.45 ± 0.98N)

TRAVEL: 3 ± 0.3 mm

OPERATING TEMPERATURE: -20˚C to 70˚C

Materials

KNOB: POM

FRAME: SPCC

CONTACT: Silver clad

TERMINAL: Silver plated

4MM TRAVEL

SK-12H04-G 6 NS PA 1P2T NON-SHORTING 6MM KNOB

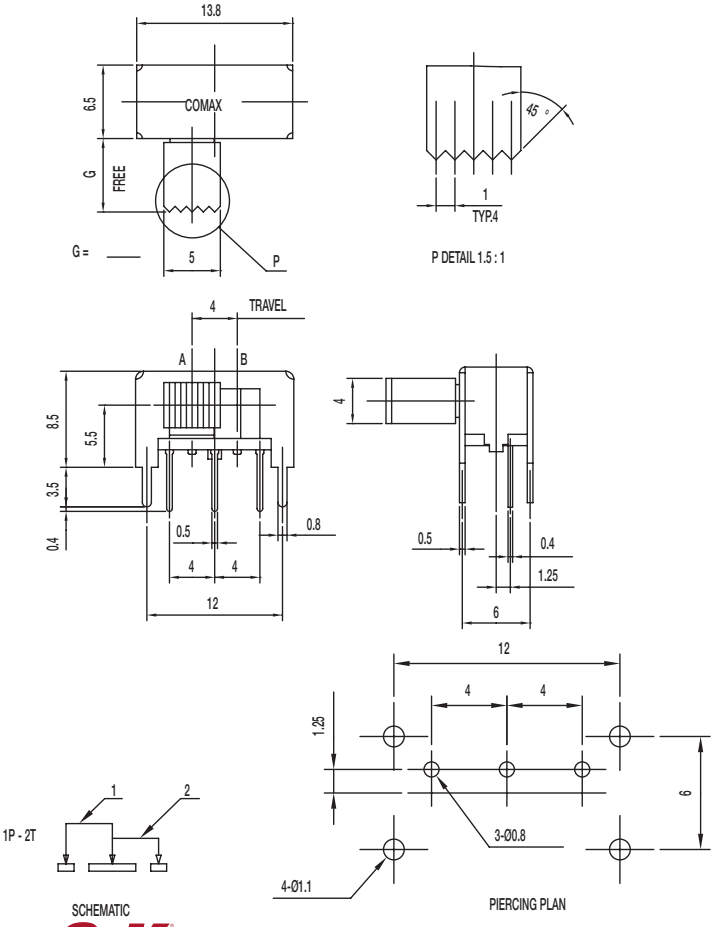

Specifications

CONTACT RATING: 0.3A @ 30 VDC

INITIAL CONTACT RESISTANCE: 30 m ohms max.

INSULATION RESISTANCE: 100 M ohms min.

DIELECTRIC STRENGTH: 500 V AC (50-60 Hz) between open terminals and between the frame and terminal.

OPERATING LIFE: 10,000 cycles with load

OPERATING FORCE: 250 ± 100 gf (2.45 ± 0.98N)

TRAVEL: 4 ± 0.3 mm

OPERATING TEMPERATURE: -20˚C to 70˚C

Materials

KNOB: PA

FRAME: SPCC

CONTACT: Silver clad

TERMINAL: Silver plated

SK-22H04-G 7 NS DPDT NON-SHORTING 7MM KNOB
SK-22H04-G 9 NS DPDT NON-SHORTING 9MM KNOB
SK-22H04-G 12 NS DPDT NON-SHORTING 12MM KNOB

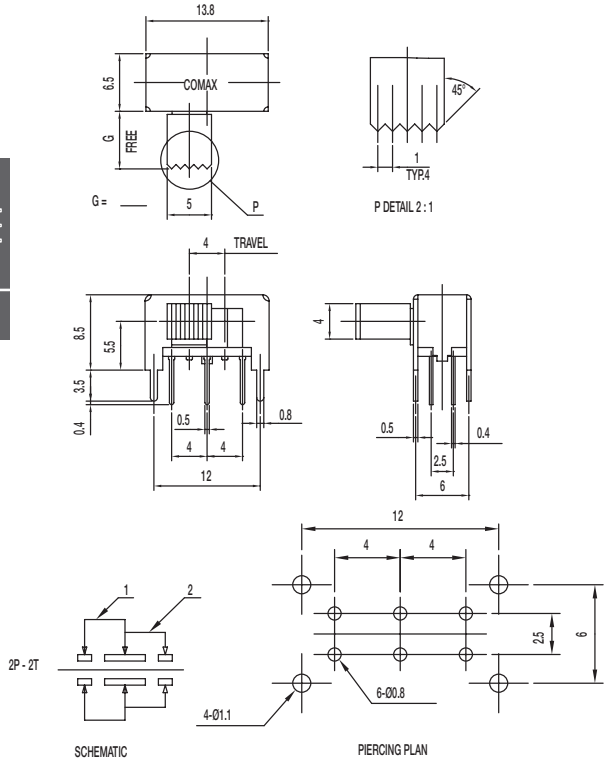

Specifications

CONTACT RATING: 0.3A @ 30 VDC

INITIAL CONTACT RESISTANCE: 30 m ohms max.

INSULATION RESISTANCE: 100 M ohms min.

DIELECTRIC STRENGTH: 500 V AC (50-60 Hz) between open terminals and between the frame and terminal.

OPERATING LIFE: 10,000 cycles with load

OPERATING FORCE: 250 ± 100 gf (2.45 ± 0.98N)

TRAVEL: 4 ± 0.3 mm

OPERATING TEMPERATURE: -20˚C to 70˚C

Materials

KNOB: POM

FRAME: SPCC

CONTACT: Silver clad

TERMINAL: Silver plated

SK-22H24-G 4 NS DPDT NON-SHORTING 4MM KNOB
SK-22H24-G 5 NS DPDT NON-SHORTING 5MM KNOB
SK-22H24-G 6 NS DPDT NON-SHORTING 6 KNOB

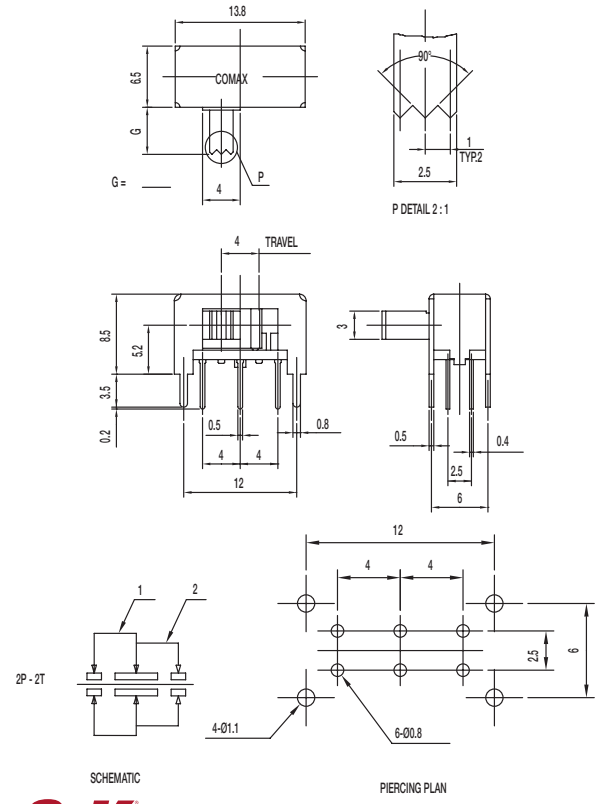

Specifications

CONTACT RATING: 0.3A @ 30 VDC

INITIAL CONTACT RESISTANCE: 30 m ohms max.

INSULATION RESISTANCE: 100 M ohms min.

DIELECTRIC STRENGTH: 500 V AC (50-60 Hz) between open terminals and between the frame and terminal.

OPERATING LIFE: 10,000 cycles with load

OPERATING FORCE: 250 ± 100 gf (2.45 ± 0.98N)

TRAVEL: 4 ± 0.3 mm

OPERATING TEMPERATURE: -20˚C to 70˚C

Materials

KNOB: POM

FRAME: SPCC

CONTACT: Silver clad

TERMINAL: Silver plated

Looking for pricing, stock, or lifecycle information?

Click below to explore more details on WIN SOURCE:

- View SK42H02G8 on WIN SOURCE
- C&K Components Information

Optimize Your Supply Chain with WIN SOURCE Solutions

- Global Sourcing Solution
- Obsolete Management
- Cost Control Management
- Shortage Management
- Alternative Solution
- Excess Inventory Management