THE DATASHEET OF

CHP-041TA

PIANO SWITCHES (HALF PITCH) CHP

RoHS compliant

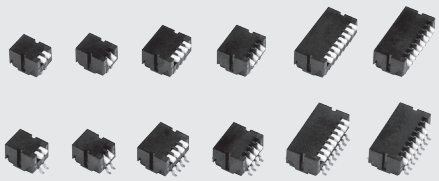

FEATURES

- RoHS compliant
- High-reliability

APPLICATIONS

- Communication devices, AV • OA equipment and computer peripherals

INTERNAL STRUCTURE

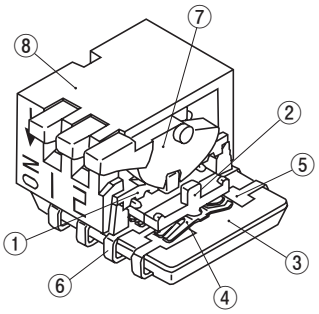

	Part name	Material	Flammability
①	Cover	Polyphenylenesulphide	UL94V-0
②	Slider	Polyamide	
③	Housing	Polyphenylenesulphide	
④	Slider contact	Copper alloy, Gold-plated	–
⑤	Fixed contact		
⑥	Terminal pin		
⑦	Piano lever	Polyamide	UL94V-0
⑧	Piano cover	Polyphenylenesulphide	

PART NUMBER DESIGNATION

C H P - 0 4 0 T B

Series name

No. of bits
02 : 2 bits
04 : 4 bits
08 : 8 bits

ON direction
0 : Upper
1 : Lower

Shape of terminal
A : J-hook
B : Gull wing

Form of packaging
T : Taping (Reel)
Blank : Bulk in plastic bag

※ Please refer to the LIST OF PART NUMBERS when placing orders.

CHP
PIANO SWITCHES (HALF PITCH)

■ LIST OF PART NUMBERS

No. of bits	ON direction	Form of packaging	Shape of terminals		Pieces in package
			A (J-hook)	B (Gull wing)	
2	Upper	Taping	CHP-020TA	CHP-020TB	500 pcs./reel
		Plastic bag	CHP-020A	CHP-020B	50 pcs./pack
	Lower	Taping	CHP-021TA	CHP-021TB	500 pcs./reel
		Plastic bag	CHP-021A	CHP-021B	50 pcs./pack
4	Upper	Taping	CHP-040TA	CHP-040TB	500 pcs./reel
		Plastic bag	CHP-040A	CHP-040B	50 pcs./pack
	Lower	Taping	CHP-041TA	CHP-041TB	500 pcs./reel
		Plastic bag	CHP-041A	CHP-041B	50 pcs./pack
8	Upper	Taping	CHP-080TA	CHP-080TB	500 pcs./reel
		Plastic bag	CHP-080A	CHP-080B	50 pcs./pack
	Lower	Taping	CHP-081TA	CHP-081TB	500 pcs./reel
		Plastic bag	CHP-081A	CHP-081B	50 pcs./pack

※ Verify the above part numbers when placing orders.
Taping version can be supplied only in reel units.

■ STANDARD SPECIFICATIONS

Operating temp. range	– 40 ~ 85 °C
Storage temp. range	
Sealing	Non-washable
Net weight	Approx. 0.16 g (CHP-02), Approx. 0.25 g (CHP-04), Approx. 0.43 g (CHP-08)

■ MECHANICAL CHARACTERISTICS

Operation angle	22 °
Operation force	5 N {0.51 kgf} maximum
Stop strength	10 N {1.02 kgf} 60 s
Solderability	245 ± 3 °C, 2 ~ 3 s
Soldering heat	Reflow : 255 °C (Peak temperature) (Please refer to the profile below)
	Manual soldering : 350 ± 10 °C, 3 ~ 4 s
Shear (Adhesion)	5 N {0.51 kgf} 10 s
Substrate bending	Width 90 mm, bend 3 mm, 5 s, 1 time
Pull-off strength	5 N {0.51 kgf} 10 s

{ } : Reference only

■ ELECTRICAL CHARACTERISTICS

Contact rating Non-switching Switching Minimum	DC50 V 100 mA DC6 V, 100 mA DC24 V, 25 mA DC20 mV 1 μA
Contact resistance	50 m Ω maximum
Insulation resistance	1000 M Ω (DC100 V) minimum
Dielectric strength	AC500 V, 60 s

■ ENVIRONMENTAL CHARACTERISTICS

Vibration	(Amplitude) 1.5 mm or (Acceleration) 98 m/s^2, 10-500 Hz, 3 directions for 10 cycles each
Shock	490 m/s^2, 11 ms 6 directions for 3 times each
Load life	Continuous load 1000 cycles, DC6 ± 0.5 V, 100 ± 10 mA
Humidity	–10 ~ 65 °C, Relative humidity 0 ~ 96 %, 24 h for 10 cycles
High temp. exposure	85 °C, 96 h
Low temp. exposure	–40 °C, 96 h
Thermal shock	–40 (0.5 h) ~ 85 °C (0.5 h), 5 cycles

〈Reflow profile for soldering heat evaluation〉

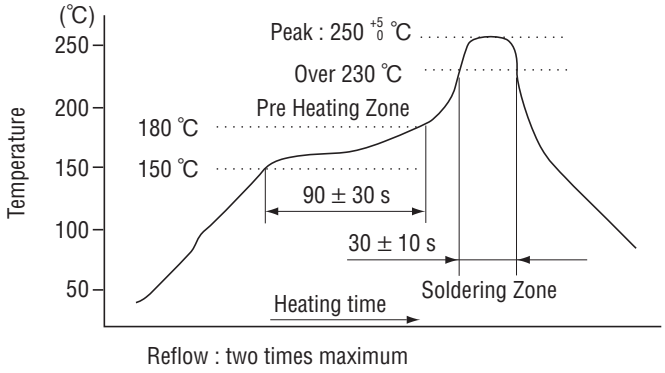

Reflow : two times maximum

■ OUTLINE DIMENSIONS

Unless otherwise specified, tolerance : ± 0.3 (Unit : mm)

● CHP-020A

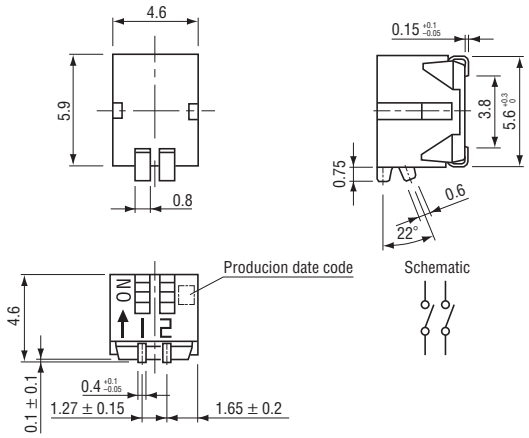

● CHP-021A

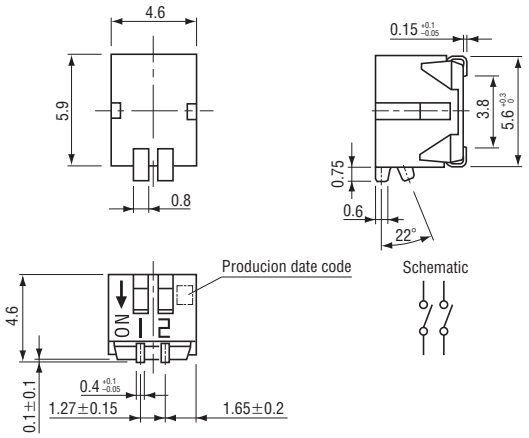

● CHP-020B

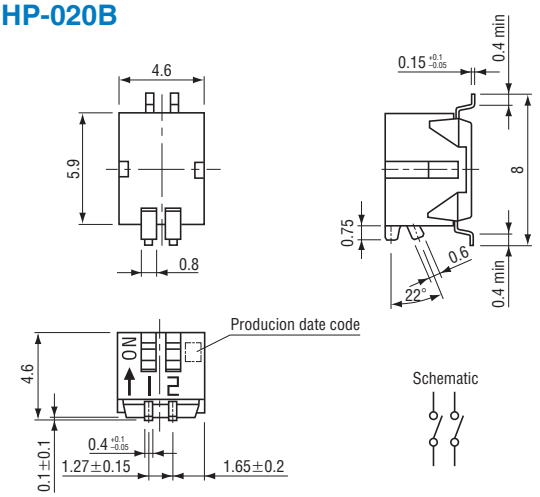

● CHP-021B

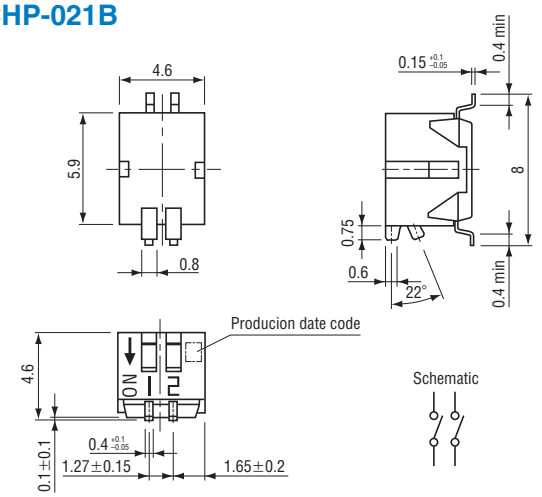

CHP
PIANO SWITCHES (HALF PITCH)

■ OUTLINE DIMENSIONS

Unless otherwise specified, tolerance : ± 0.3 (Unit : mm)

● CHP-040A

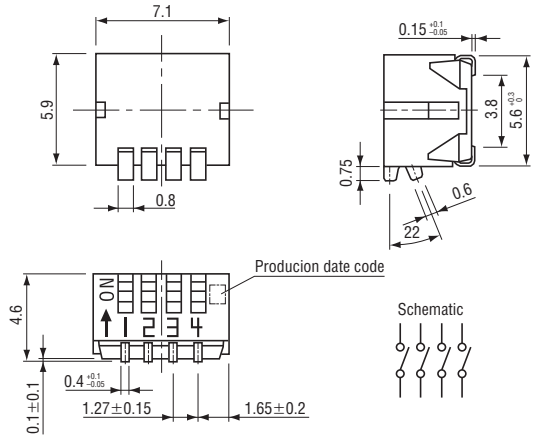

● CHP-041A

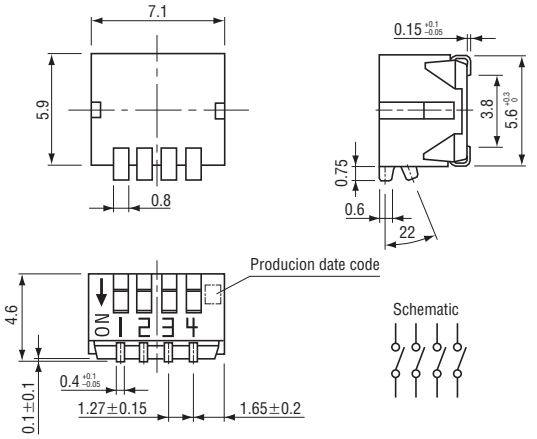

● CHP-040B

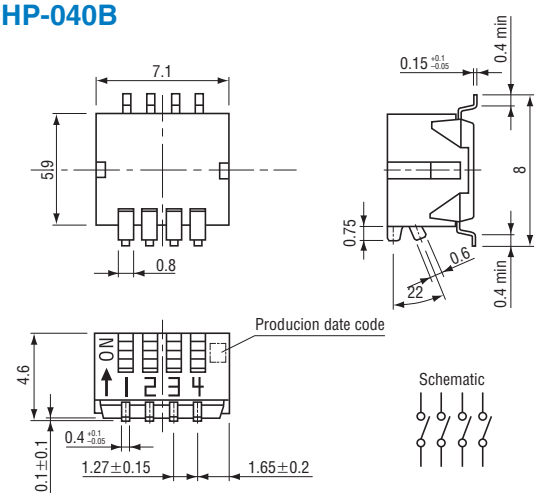

● CHP-041B

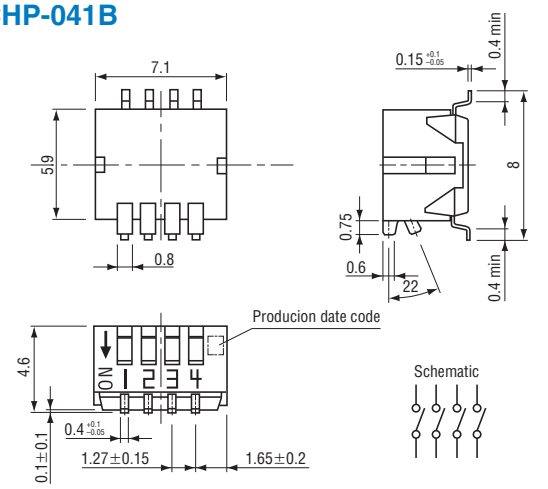

● CHP-080A

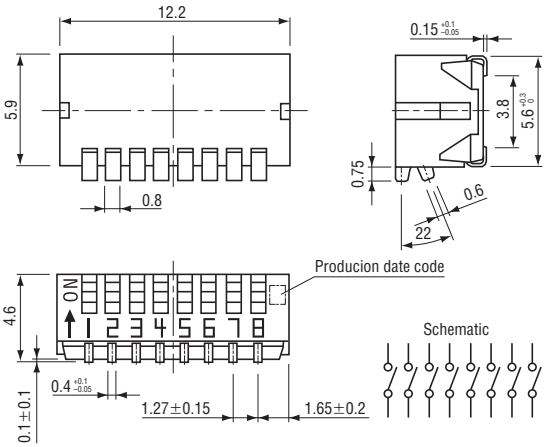

● CHP-081A

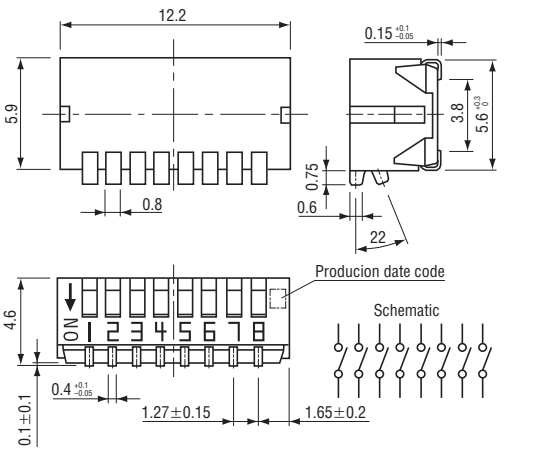

OUTLINE DIMENSIONS

Unless otherwise specified, tolerance : ± 0.3 (Unit : mm)

CHP-080B

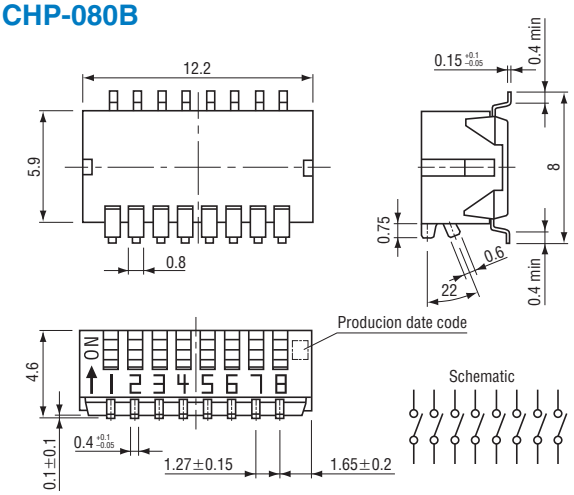

CHP-081B

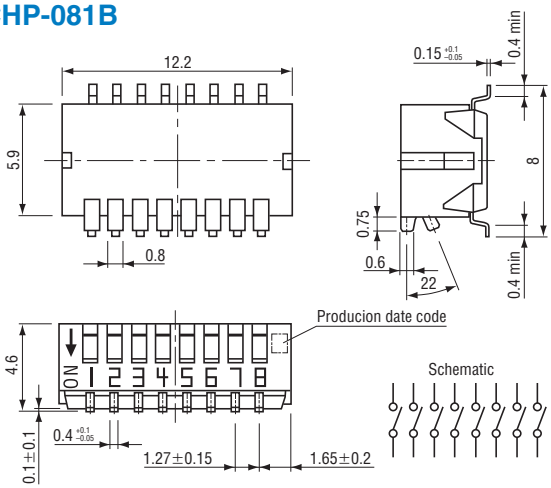

RECOMMENDED P.C.B. PAD DIMENSIONS

2 bits A type

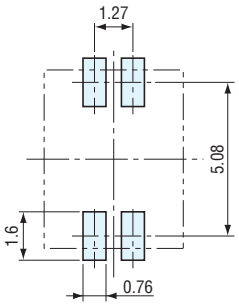

B type

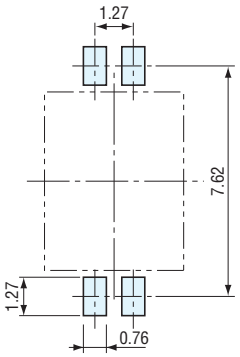

4 bits A type

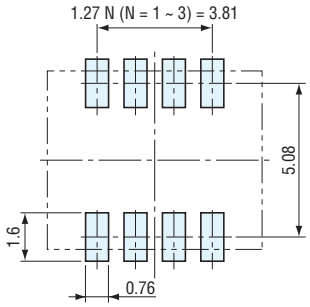

B type

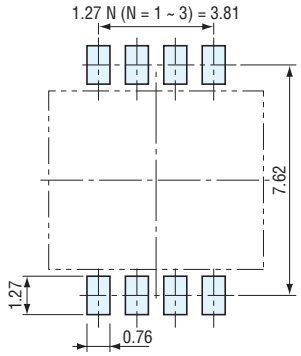

8 bits A type

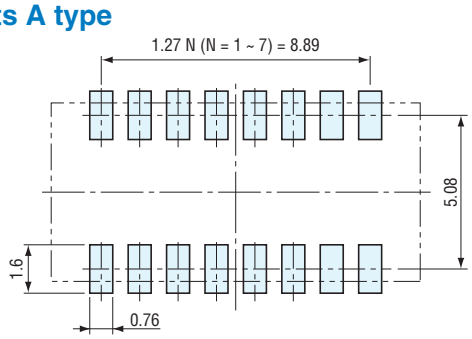

B type

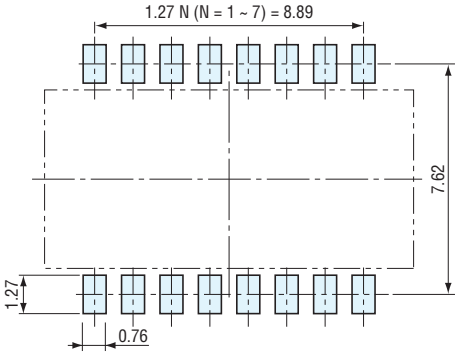

CHP
PIANO SWITCHES (HALF PITCH)

■ PACKAGING SPECIFICATIONS

<Taping packaging specifications>

- Taping version is packaged in 500 pcs. per reel. Orders will be accepted for units of 500 pcs., i.e., 500, 1000, 1500 pcs., etc.
- Taping version is boxed with two reels.

  Maximum number of consecutive missing pieces=2
  Leader length and reel dimension are shown in the diagrams below:

● Embossed tape dimensions

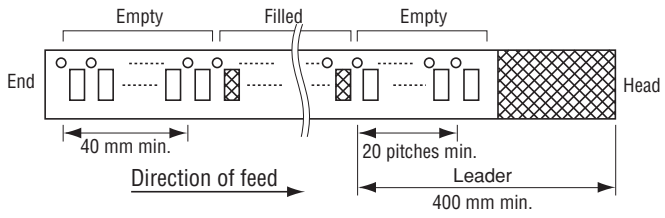

● Reel dimensions

(Unit: mm)

(Conforms to JIS C 0806-3)
(In accordance with EIAJ ET-7200A)

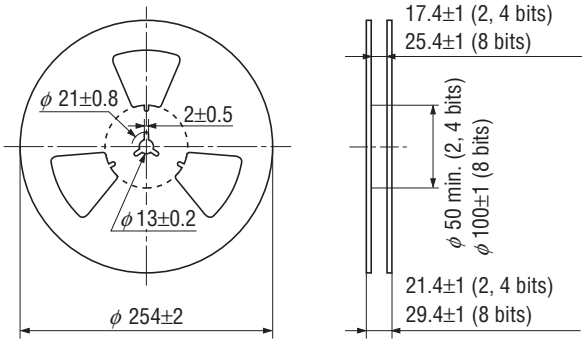

● 2 bits

(Unit : mm)

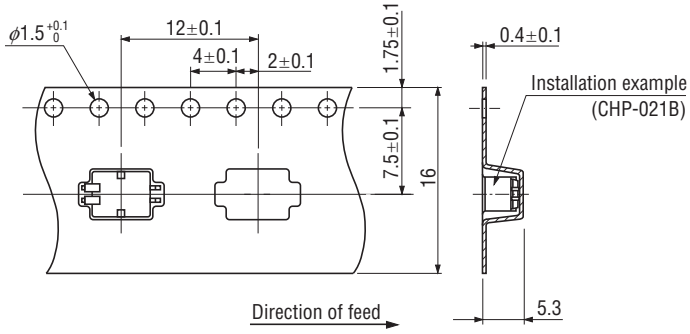

● 4 bits

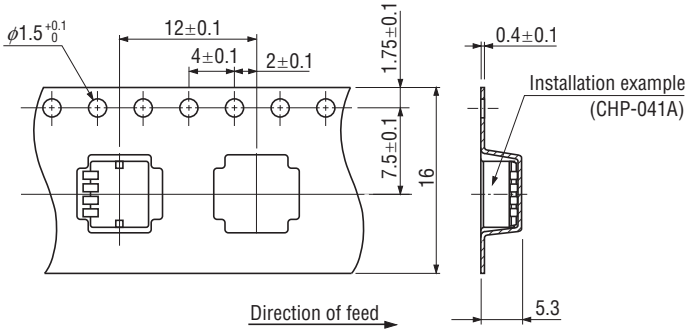

● 8 bits

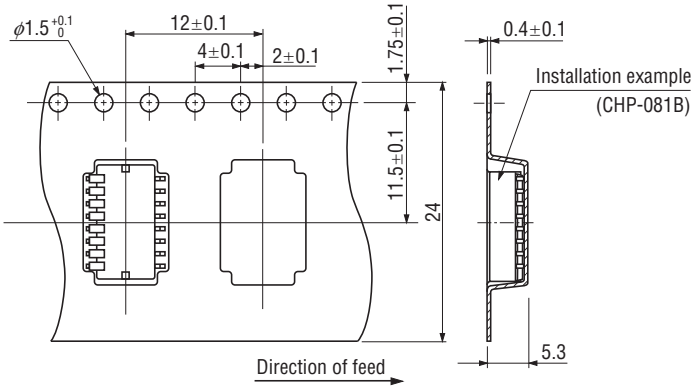

〈Bulk pack specifications〉

- The smallest unit of bulk pack in a plastic bag is 10 pcs. per pack. Orders will be accepted for unit of minimum 10 pcs., i.e., 10, 20, 30 pcs., etc.
- Boxing of bulk in a plastic bag is performed with 50 pcs. (Standard 100 pcs.) per box.

Looking for pricing, stock, or lifecycle information?

Click below to explore more details on WIN SOURCE:

- View CHP-041TA on WIN SOURCE
- Copal Electronics Inc. Information

Optimize Your Supply Chain with WIN SOURCE Solutions

- Global Sourcing Solution
- Obsolete Management
- Cost Control Management
- Shortage Management
- Alternative Solution
- Excess Inventory Management