# THE DATASHEET OF

# 5114N

# DC axial compact fan



**ebm-papst St. Georgen GmbH & Co. KG**
Hermann-Papst-Str. 1
D-78112 St. Georgen
Phone +49 (0) 7724 81-0
Fax +49 (0) 7724 81-1309
info2@de.ebmpapst.com
www.ebmpapst.com

## Nominal data

| Type | 5114 N | |
|---|---|---|
| Nominal voltage | VDC | 24 |
| Nominal voltage range | VDC | 12 .. 30 |
| Speed (rpm) | $min^{-1}$ | 2900 |
| Power consumption | W | 9.5 |
| Min. ambient temperature | °C | -25 |
| Max. ambient temperature | °C | 72 |
| Air flow | $m^3/h$ | 260 |
| Sound power level | B | 6.1 |
| Sound pressure level | dB(A) | 48 |

ml = Max. load · me = Max. efficiency · fa = Free air · cs = Customer specification · ce = Customer equipment
Subject to change

# DC axial compact fan

## Technical description

| | |
|---|---|
| **General description** | * Power consumption when wide open; these values may be considerably higher at the operating point. |
| **Weight** | 0.650 kg |
| **Dimensions** | 135 x 135 x 38 mm |
| **Impeller material** | Sheet steel, painted black |
| **Housing material** | Die-cast aluminum |
| **Airflow direction** | Exhaust over struts |
| **Direction of rotation** | Counterclockwise, viewed toward rotor |
| **Storage** | Ball bearing |
| **Service life L10 at 40 °C** | 80000 h |
| **Service life L10 at maximum temperature** | 37500 h |
| **Cable** | Leads AWG 22, TR 64, stripped and tin-plated. |
| **Motor protection** | Protection against reverse polarity and blocked rotor. |
| **Locked-rotor protection** | Electronic locked-rotor protection |
| **Approval** | CE |
| **Option** | Speed signal |



ebm-papst St. Georgen GmbH & Co. KG · Hermann-Papst-Str. 1 · D-78112 St. Georgen · Phone +49 (0) 7724 81-0 · Fax +49 (0) 7724 81-1309 · info2@de.ebmpapst.com · www.ebmpapst.com

# DC axial compact fan

## Product drawing

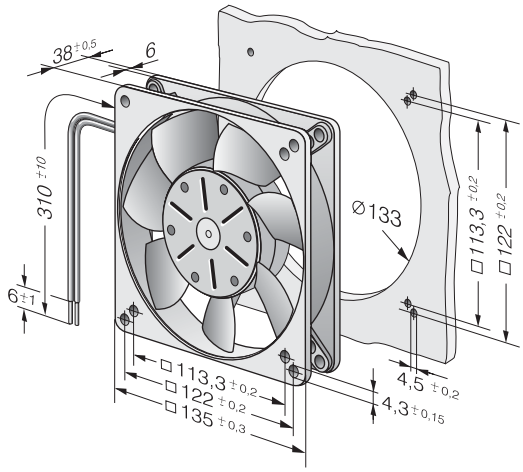




ebm-papst St. Georgen GmbH & Co. KG · Hermann-Papst-Str. 1 · D-78112 St. Georgen · Phone +49 (0) 7724 81-0 · Fax +49 (0) 7724 81-1309 · info2@de.ebmpapst.com · www.ebmpapst.com

# DC axial compact fan

## Curves: Air performance

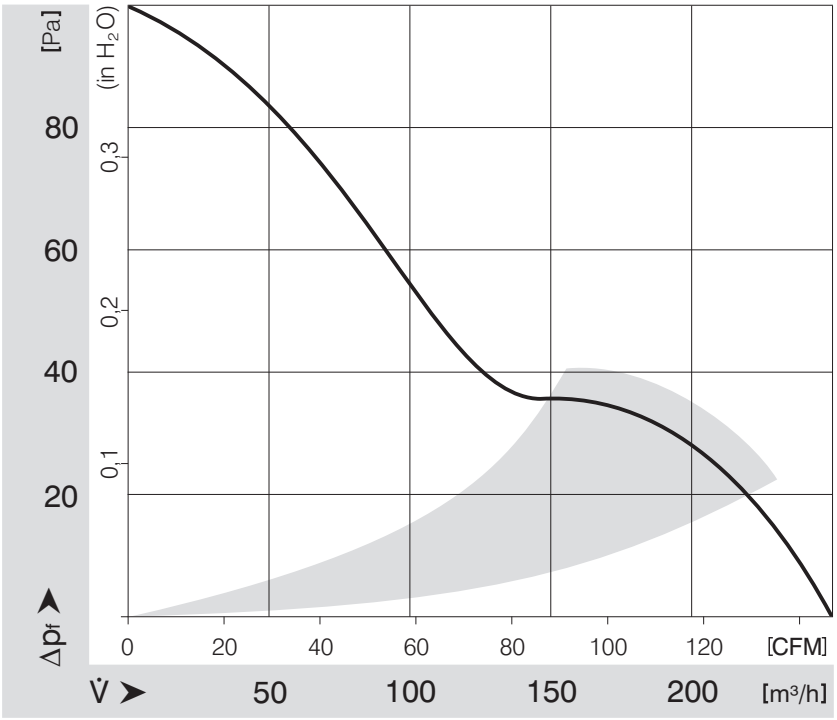




ebm-papst St. Georgen GmbH & Co. KG · Hermann-Papst-Str. 1 · D-78112 St. Georgen · Phone +49 (0) 7724 81-0 · Fax +49 (0) 7724 81-1309 · info2@de.ebmpapst.com · www.ebmpapst.com

## Looking for pricing, stock, or lifecycle information?

Click below to explore more details on WIN SOURCE:

- View 5114N on WIN SOURCE
- ebm-papst Information

## Optimize Your Supply Chain with WIN SOURCE Solutions

- Global Sourcing Solution
- Obsolete Management
- Cost Control Management
- Shortage Management
- Alternative Solution
- Excess Inventory Management