THE DATASHEET OF

ISL54209IRUZ-T

www.win-source.net 0086-755-83957316

ISL54209

MP3/USB 2.0 High Speed Switch with Negative Signal Handling and Low Power Shutdown

FN6627
Rev 4.00
June 10, 2010

The Intersil ISL54209 dual SPDT (Single Pole/Double Throw) switch combines low distortion audio and accurate USB 2.0 high speed data (480Mbps) signal switching in the same low voltage device. When operated with a 2.5V to 5.0V single supply, this analog switch allows audio signal swings below ground, allowing for the use of a common USB and audio headphone connector in Personal Media Players and other portable battery powered devices.

The ISL54209 logic control pins are 1.8V compatible, which allows for control via a standard µcontroller.

The ISL54209 has an audio enable control pin to open all switches and put the part in a low power state. In this state, the device draws typically 1nA of current.

The ISL54209 is available in a small 10 Ld 1.8mm x 1.4mm or 2.1mmx 1.6mm ultra-thin µTQFN packages and a 10 Ld 3mmx3mm TDFN package. It operates over a temperature range of -40°C to +85°C.

Related Literature

- Technical Brief TB363 “Guidelines for Handling and Processing Moisture Sensitive Surface Mount Devices (SMDs)”
- Application Note AN1406 “ISL54209EVAL1Z Evaluation Board User’s Manual”

Features

- High Speed (480Mbps) and Full Speed (12Mbps) Signaling Capability per USB 2.0
- Low Distortion Negative Signal Capability
- Low Power Shutdown State
- Low Distortion Headphone Audio Signals
  - THD+N at 1mW into 32Ω Load . . . . . <0.013%
- Crosstalk (100kHz) . . . . . -95dB
- OFF-Isolation (100kHz) 95dB
- Single Supply Operation (V_{DD}) . . . . . 2.5V to 5.0V
- -3dB Bandwidth USB Switch 736MHz
- Available in µTQFN and TDFN Packages
- COM Pins Over-voltage Tolerant to 5.5V
- Compliant with USB 2.0 Short Circuit Requirements Without Additional External Components
- Pb-Free (RoHS Compliant)

Applications* (see page 16)

- MP3 and other Personal Media Players
- Cellular/Mobile Phones
- PDAs
- Audio/USB Switching

Application Block Diagram

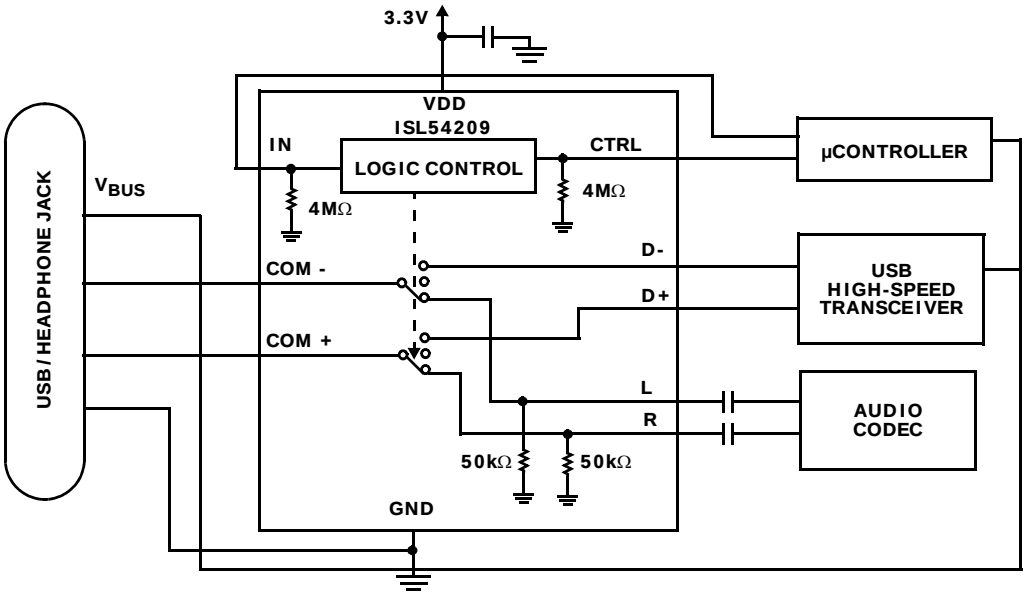

Pin Configurations (Note 1)

ISL54209
(10 LD 2.1mmx1.6mm µTQFN)
TOP VIEW

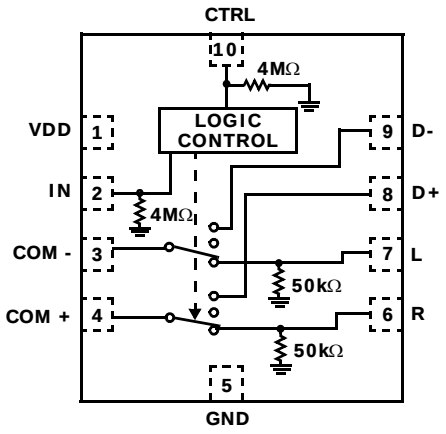

ISL54209
(10 LD 3.0mmx3.0mm TDFN)
TOP VIEW

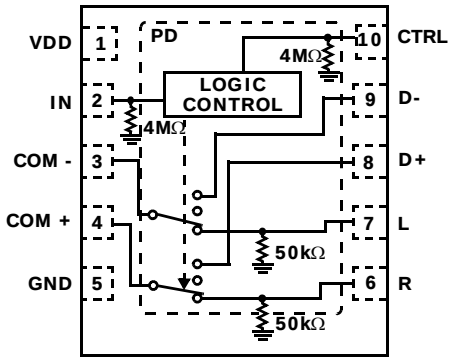

ISL54209
(10 LD 1.8mmx1.4mm µTQFN)
TOP VIEW

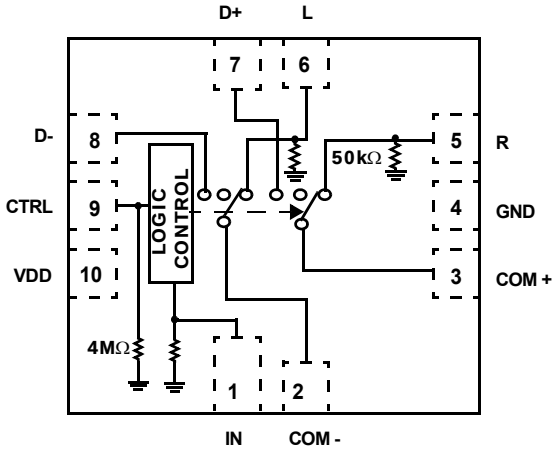

NOTE:

1. ISL54209 Switches Shown for IN = Logic “0” and CTRL = Logic “1”.

Truth Table

ISL54209			
IN	**CTRL**	**L, R**	**D+, D-**
0	0	OFF	OFF
0	1	ON	OFF
1	X	OFF	ON

IN, CTRL: Logic “0” when ≤ 0.5V or Floating, Logic “1” when ≥ 1.4V with 2.7V to 3.6V Supply.

Pin Descriptions

TDFN	µTQFN 2.1mmx1.6mm	µTQFN 1.8mmx1.4mm	NAME	FUNCTION
1	1	10	VDD	Power Supply
2	2	1	IN	Digital Control Input
3	3	2	COM-	Voice and Data Common Pin
4	4	3	COM+	Voice and Data Common Pin
5	5	4	GND	Ground Connection
6	6	5	R	Audio Right Input
7	7	6	L	Audio Left Input
8	8	7	D+	USB Differential Input
9	9	8	D-	USB Differential Input
10	10	9	CTRL	Digital Control Input (Audio Enable)
PD	-	-	PD	Thermal Pad. Tie to Ground or Float

Ordering Information

PART NUMBER	PART MARKING	TEMP. RANGE (°C)	PACKAGE (Pb-Free)	PKG. DWG. #
ISL54209IRUZ-T (Notes 3, 4, 5)	GF	-40 to +85	10 Ld 2.1mmx1.6mm µTQFN	L10.2.1x1.6A
ISL54209IRU1Z-T (Notes 3, 4, 5)	U4	-40 to +85	10 Ld 1.8mmx1.4mm µTQFN	L10.1.8x1.4A
ISL54209IRTZ-T (Notes 2, 4, 5)	4209	-40 to +85	10 Ld 3mmx3mm TDFN	L10.3x3A
ISL54209IRTZ (Notes 2, 5)	4209	-40 to +85	10 Ld 3mmx3mm TDFN	L10.3x3A
ISL54209EVAL1Z	ISL54209 Eval Kit			

NOTES:

2. These Intersil Pb-free plastic packaged products employ special Pb-free material sets, molding compounds/die attach materials, and 100% matte tin plate plus anneal (e3 termination finish, which is RoHS compliant and compatible with both SnPb and Pb-free soldering operations). Intersil Pb-free products are MSL classified at Pb-free peak reflow temperatures that meet or exceed the Pb-free requirements of IPC/JEDEC J STD-020.
3. These Intersil Pb-free plastic packaged products employ special Pb-free material sets; molding compounds/die attach materials and NiPdAu plate - e4 termination finish, which is RoHS compliant and compatible with both SnPb and Pb-free soldering operations. Intersil Pb-free products are MSL classified at Pb-free peak reflow temperatures that meet or exceed the Pb-free requirements of IPC/JEDEC J STD-020.
4. Please refer to TB347 for details on reel specifications.
5. For Moisture Sensitivity Level (MSL), please see device information page for ISL54209. For more information on MSL please see techbrief TB363.

Absolute Maximum Ratings

V_{DD} to GND . . . . . -0.3V to 5.5V
Input Voltages
D+, D- (Note 6) . . . . . - 2V to 5.5V
L, R (Note 6) . . . . . - 2V to ((V_{DD}) + 0.3V)
IN, CTRL (Note 6) . . . . . -0.3V to ((V_{DD}) + 0.3V)
Output Voltages
COM-, COM+ (Note 6) . . . . . -2V to 5.5V
Continuous Current (Audio Switches) . . . . . ±150mA
Peak Current (Audio Switches)
(Pulsed 1ms, 10% Duty Cycle, Max) . . . . . ±300mA
Continuous Current (USB Switches) . . . . . ±40mA
Peak Current (USB Switches)
(Pulsed 1ms, 10% Duty Cycle, Max) . . . . . ±100mA
ESD Ratings
Human Body Model, I/0 to GND . . . . . >4kV
Human Body Model, All Other Pins. . . . . >3.5kV
Human Body Model, V_{DD} to GND. . . . . >11kV
Machine Model . . . . . >250V
Charged Device Model . . . . . >2kV
Latch-up Tested per JEDEC: ClassII Level A > . . . . @ +85°C

Thermal Information

Thermal Resistance (Typical)	θ_{JA} (°C/W)	θ_{JC} (°C/W)
10 Ld 2.1mmx1.6mm µTQFN (Notes 8, 10).	154	100
10 Ld 3mmx3mm TDFN (Notes 7, 9) . .	58	18
10 Ld 1.8mmx1.4mm µTQFN (Notes 8, 10).	160	105

Maximum Junction Temperature (Plastic Package). . +150°C
Maximum Storage Temperature Range. . . . . -65°C to +150°C
Pb-Free Reflow Profile . . . . . .see link below
http://www.intersil.com/pbfree/Pb-FreeReflow.asp

Operating Conditions

Temperature Range . . . . . -40°C to +85°C
Audio Signal Range . . . . . -1.5V to 1.5V
USB Signal Range . . . . . 0V to V_{DD}

CAUTION: Do not operate at or near the maximum ratings listed for extended periods of time. Exposure to such conditions may adversely impact product reliability and result in failures not covered by warranty.

NOTES:

6. Signals on D+, D-, L, R, COM-, COM+, CTRL and IN exceeding V_{DD} or GND by specified amount are clamped. Limit current to maximum current ratings.
7. θ_{JA} is measured in free air with the component mounted on a high effective thermal conductivity test board with “direct attach” features. See Tech Brief TB379.
8. θ_{JA} is measured with the component mounted on a high effective thermal conductivity test board in free air. See Tech Brief TB379 for details.
9. For θ_{JC}, the “case temp” location is the center of the exposed metal pad on the package underside.
10. For θ_{JC}, the “case temp” location is taken at the package top center.

Electrical Specifications - 2.7V to 3.6V Supply

Test Conditions: V_{DD} = +3.0V, GND = 0V, V_{INH} = V_{CTRLH} = 1.4V, V_{INL} = V_{CTRLL} = 0.5V, (Note 11), Unless Otherwise Specified. **Boldface limits apply over the operating temperature range, -40°C to +85°C.**

PARAMETER	TEST CONDITIONS	TEMP (°C)	MIN (Notes 12, 13)	TYP	MAX (Notes 12, 13)	UNITS
ANALOG SWITCH CHARACTERISTICS						
Audio Switches (L, R)						
Analog Signal Range, V_{ANALOG}	V_{DD} = 3.3V, IN = 0.5V, CTRL = 1.4V	Full	**-1.5**	-	**1.5**	V
ON-Resistance, r_{ON}	V_{DD} = 3.0V, IN = 0.5V, CTRL = 1.4V, I_{COMx} = 40mA, V_L or V_R = -0.85V to 0.85V (Figure 3, Note 15)	+25	-	2.5	2.8	Ω
		Full	**-**	-	**3.4**	Ω
r_{ON} Matching Between Channels, Δr_{ON}	V_{DD} = 3.0V, IN = 0.5V, CTRL = 1.4V, I_{COMx} = 40mA, V_L or V_R = Voltage at max r_{ON} over signal range of -0.85V to 0.85V (Notes 15, 16)	+25	-	0.09	0.25	Ω
		Full	**-**	-	**0.26**	Ω
r_{ON} Flatness, $r_{FLAT(ON)}$	V_{DD} = 3.0V, IN = 0.5V, CTRL = 1.4V, I_{COMx} = 40mA, V_L or V_R = -0.85V to 0.85V (Notes 14, 15)	+25	-	0.02	0.05	Ω
		Full	**-**	-	**0.07**	Ω
ON-Resistance, r_{ON}	V_{DD} = 5.0V, IN = 0V, CTRL = V_{DD}, I_{COMx} = 40mA, V_L or V_R = -0.85V to 0.85V (Figure 3)	25	-	2.3	-	Ω

Electrical Specifications - 2.7V to 3.6V Supply Test Conditions: V_{DD} = +3.0V, GND = 0V, V_{INH} = V_{CTRLH} = 1.4V, V_{INL} = V_{CTRLL} = 0.5V, (Note 11), Unless Otherwise Specified. **Boldface limits apply over the operating temperature range, -40°C to +85°C. (Continued)**

PARAMETER	TEST CONDITIONS	TEMP (°C)	MIN (Notes 12, 13)	TYP	MAX (Notes 12, 13)	UNITS
ON-Resistance, r_{ON}	V_{DD} = 4.2V, IN = 0V, CTRL = V_{DD}, I_{COMx} = 40mA, V_L or V_R = -0.85V to 0.85V (Figure 3)	25	-	2.35	-	Ω
ON-Resistance, r_{ON}	V_{DD} = 2.85V, IN = 0V, CTRL = V_{DD}, I_{COMx} = 40mA, V_L or V_R = -0.85V to 0.85V (Figure 3)	25	-	2.72	-	Ω
Discharge Pull-Down Resistance, R_L, R_R	V_{DD} = 3.6V, IN = 0V, CTRL = 1.4V, V_{COM-} or V_{COM+} = -0.85V, 0.85V, V_L or V_R = -0.85V, 0.85V, V_{D+} and V_{D-} = floating; measure current through the discharge pull-down resistor and calculate resistance value.	+25	-	50	-	kΩ
USB Switches (D+, D-)						
Analog Signal Range, V_{ANALOG}	V_{DD} = 2.7V to 3.6V, IN = 1.4V, CTRL = 1.4V	Full	**0**	-	**V_{DD}**	V
ON-Resistance, r_{ON} (High-Speed)	V_{DD} = 3.3V, IN = 1.4V, CTRL = 1.4V, I_{COMx} = 40mA, V_{D+} or V_{D-} = 0V to 400mV (Figure 4, Note 15)	25	-	5	6.5	Ω
		Full	**-**	-	**7**	Ω
r_{ON} Matching Between Channels, Δr_{ON} (High-Speed)	V_{DD} = 3.3V, IN = 1.4V, CTRL = 1.4V, I_{COMx} = 40mA, V_{D+} or V_{D-} = Voltage at max r_{ON} (Notes 15, 16)	25	-	0.05	0.25	Ω
		Full	**-**	-	**0.55**	Ω
r_{ON} Flatness, $r_{FLAT(ON)}$ (High-Speed)	V_{DD} = 3.3V, IN = 1.4V, CTRL = 1.4V, I_{COMx} = 40mA, V_{D+} or V_{D-} = 0V to 400mV (Notes 14, 15)	25	-	0.45	0.55	Ω
		Full	**-**	-	**1.0**	Ω
ON-Resistance, r_{ON} (Full-Speed)	V_{DD} = 3.3V, IN = 1.4V, CTRL = 1.4V, I_{COMx} = 1mA, V_{D+} or V_{D-} = 3.3V (Figure 4, Note 15)	25	-	25	30	Ω
		Full	**-**	-	**35**	Ω
ON-Resistance, r_{ON}	V_{DD} = 5.0V, IN = V_{DD}, CTRL = V_{DD}, I_{COMx} = 1mA, V_{D+} or V_{D-} = 5V (Figure 4)	+25	-	20	-	Ω
ON-Resistance, r_{ON}	V_{DD} = 4.2V, IN = V_{DD}, CTRL = V_{DD}, I_{COMx} = 1mA, V_{D+} or V_{D-} = 4.2V (Figure 4)	25	-	22	-	Ω
ON-Resistance, r_{ON}	V_{DD} = 2.85V, IN = V_{DD}, CTRL = V_{DD}, I_{COMx} = 1mA, V_{D+} or V_{D-} = 2.85V (Figure 4)	25	-	28	-	Ω
OFF-Leakage Current, $I_{D+(OFF)}$ or $I_{D-(OFF)}$	V_{DD} = 3.6V, IN = 0V, CTRL = 3.6V, V_{COM-} or V_{COM+} = 0.5V, 0V, V_{D+} or V_{D-} = 0V, 0.5V, V_L and V_R = float	25	-5	0.5	5	nA
		Full	**-60**	-	**60**	nA
ON-Leakage Current, I_{DX}	V_{DD} = 3.6V, IN = V_{DD}, CTRL = 0V or V_{DD}, V_{D+} or V_{D-} = 2.7V, V_{COM-} or V_{COM+} = Float, V_L and V_R = float	25	-10	2	10	nA
		Full	**-70**	-	**70**	nA
DYNAMIC CHARACTERISTICS						
USB Turn-ON Time, t_{ON}	V_{DD} = 3.0V, R_L = 50Ω, C_L = 10pF (Figure 1)	25	-	52	-	ns
USB Turn-OFF Time, t_{OFF}	V_{DD} = 3.0V, R_L = 50Ω, C_L = 10pF (Figure 1)	25	-	20	-	ns
Audio Turn-ON Time, t_{ON}	V_{DD} = 3.0V, R_L = 50Ω, C_L = 10pF (Figure 1)	25	-	2.5	-	µs
Audio Turn-OFF Time, t_{OFF}	V_{DD} = 3.0V, R_L = 50Ω, C_L = 10pF (Figure 1)	25	-	50	-	ns
Break-Before-Make Time Delay, t_D	V_{DD} = 3.0V, R_L = 50Ω, C_L = 10pF (Figure 2)	25	-	44	-	ns

Electrical Specifications - 2.7V to 3.6V Supply Test Conditions: V_{DD} = +3.0V, GND = 0V, V_{INH} = V_{CTRLH} = 1.4V, V_{INL} = V_{CTRLL} = 0.5V, (Note 11), Unless Otherwise Specified. **Boldface limits apply over the operating temperature range, -40°C to +85°C. (Continued)**

PARAMETER	TEST CONDITIONS	TEMP (°C)	MIN (Notes 12, 13)	TYP	MAX (Notes 12, 13)	UNITS
Skew, t_{SKEW}	V_{DD} = 3.0V, IN = 3V, CTRL = 3V, R_L = 45Ω, C_L = 10pF, t_R = t_F = 720ps at 480Mbps, (Duty Cycle = 50%) (Figure 7)	25	-	50	-	ps
Total Jitter, t_J	V_{DD} =3.0V, IN = 3V, CTRL = 3V, R_L = 50Ω, C_L = 10pF, t_R = t_F = 750ps at 480Mbps	25	-	210	-	ps
Propagation Delay, t_{PD}	V_{DD} = 3.0V, IN = 3V, CTRL = 3V, R_L = 45Ω, C_L = 10pF (Figure 7)	25	-	250	-	ps
Audio Crosstalk R to COM-, L to COM+	V_{DD} = 3.0V, IN = 0V, CTRL = 3.0V, R_L = 32Ω, f = 20Hz to 20kHz, V_R or V_L = 0.707V_{RMS} ($2V_{P-P}$) (Figure 6)	25	-	-110	-	dB
Crosstalk (Audio to USB, USB to Audio)	V_{DD} = 3.0V, R_L = 50Ω, f = 100kHz (Figure 6)	25	-	-95	-	dB
OFF-Isolation	V_{DD} = 3.0V, R_L = 50Ω, f = 100kHz	25	-	95	-	dB
OFF-Isolation	V_{DD} = 3.0V, R_L = 32Ω, f = 20Hz to 20kHz	25	-	114	-	dB
Total Harmonic Distortion	f = 20Hz to 20kHz, V_{DD} = 3.0V, IN = 0V, CTRL = 3.0V, V_L or V_R = 180mV_{RMS} ($509mV_{P-P}$), R_L = 32Ω	25	-	0.013	-	%
Total Harmonic Distortion	f = 20Hz to 20kHz, V_{DD} = 3.0V, IN = 0V, CTRL = 3.0V, V_L or V_R = 0.707V_{RMS} ($2V_{P-P}$), R_L = 32Ω	25	-	0.06	-	%
USB Switch -3dB Bandwidth	Signal = 0dBm, 0.2V_{DC} offset, R_L = 50Ω, C_L = 5pF	25	-	736	-	MHz
D+/D- OFF-Capacitance, C_{DxOFF}	f = 1MHz, V_{DD} = 3.0V, IN = 0V, CTRL = 3.0V, V_{D-} or V_{D+} = V_{COMx} = 0V (Figure 5)	25	-	3	-	pF
L/R OFF-Capacitance, C_{LOFF}, C_{ROFF}	f = 1MHz, V_{DD} = 3.0V, IN = 3.0V, CTRL = 0V or 3V, V_L or V_R = V_{COMx} = 0V (Figure 5)	25	-	5	-	pF
COM ON-Capacitance, $C_{COMx(ON)}$	f = 1MHz, V_{DD} = 3.0V, IN = 3.0V, CTRL = 0V or 3V, V_{D-} or V_{D+} = V_{COMx} = 0V (Figure 5)	25	-	8	-	pF
POWER SUPPLY CHARACTERISTICS						
Power Supply Range, V_{DD}		Full	**2.5**		**5.0**	V
Positive Supply Current, I_{DD}	V_{DD} = 3.6V, IN = 0V or 3.6V, CTRL = 3.6V	25	-	7	13	µA
		Full	**-**	-	**15**	µA
Positive Supply Current, I_{DD} (Low Power State)	V_{DD} = 3.6V, IN = 0V, CTRL = 0V or float	25	-	1	10	nA
		Full	**-**	-	**150**	nA
Power OFF-Current, I_{Dx} I_{COMx}	V_{DD} = 0V, V_{Dx} = V_{COMx} = 5.25V, IN = CTRL = Float	25	-	7	-	µA
DIGITAL INPUT CHARACTERISTICS						
Voltage Low, V_{INL}, V_{CTRLL}	V_{DD} = 2.7V to 3.6V	Full	**-**	-	**0.5**	V
Voltage High, V_{INH}, V_{CTRLH}	V_{DD} = 2.7V to 3.6V	Full	**1.4**	-	**-**	V

Electrical Specifications - 2.7V to 3.6V Supply Test Conditions: V_{DD} = +3.0V, GND = 0V, V_{INH} = V_{CTRLH} = 1.4V, V_{INL} = V_{CTRLL} = 0.5V, (Note 11), Unless Otherwise Specified. **Boldface limits apply over the operating temperature range, -40°C to +85°C. (Continued)**

PARAMETER	TEST CONDITIONS	TEMP (°C)	MIN (Notes 12, 13)	TYP	MAX (Notes 12, 13)	UNITS
Input Current, I_{INL}, I_{CTRLL}	V_{DD} = 3.6V, IN = 0V, CTRL = 0V	Full	**-50**	20	**50**	nA
Input Current, I_{INH}	V_{DD} = 3.6V, IN = 3.6, CTRL = 0V	Full	**-2**	0.9	**2**	µA
Input Current, I_{CTRLH}	V_{DD} = 3.6V, IN = 0V, CTRL = 3.6V	Full	**-2**	0.9	**2**	µA
CTRL Pull-Down Resistor, R_{CTRL}	V_{DD} = 3.6V, IN = 0V, CTRL = 3.6V; measure current through the internal pull-down resistor and calculate resistance value.	Full	**-**	4	**-**	MΩ
IN Pull-Down Resistor, R_{IN}	V_{DD} = 3.6V, IN = 3.6V, CTRL = 3.6V; measure current through the internal pull-down resistor and calculate resistance value.	Full	**-**	4	**-**	MΩ

NOTES:

11. V_{LOGIC} = Input voltage to perform proper function.
12. The algebraic convention, whereby the most negative value is a minimum and the most positive a maximum, is used in this data sheet.
13. Parameters with MIN and/or MAX limits are 100% tested at +25°C, unless otherwise specified. Temperature limits established by characterization and are not production tested.
14. Flatness is defined as the difference between maximum and minimum value of ON-resistance over the specified analog signal range.
15. Limits established by characterization and are not production tested.
16. r_{ON} matching between channels is calculated by subtracting the channel with the highest max r_{ON} value from the channel with lowest max r_{ON} value, between L and R or between D+ and D-.

Test Circuits and Waveforms

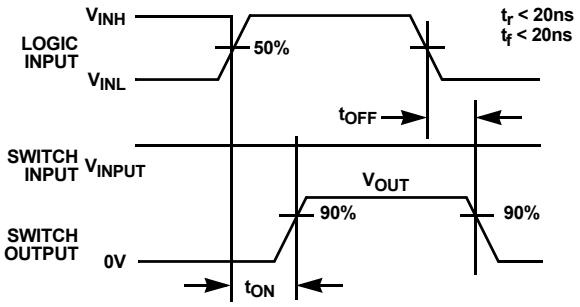

Logic input waveform is inverted for switches that have the opposite logic sense.

FIGURE 1A. MEASUREMENT POINTS

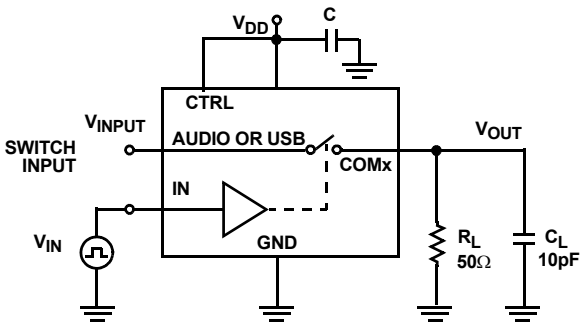

Repeat test for all switches. C_L includes fixture and stray capacitance.

$$V_{OUT} = V_{(INPUT)} \frac{R_L}{R_L + r_{ON}}$$

FIGURE 1B. TEST CIRCUIT

FIGURE 1. SWITCHING TIMES

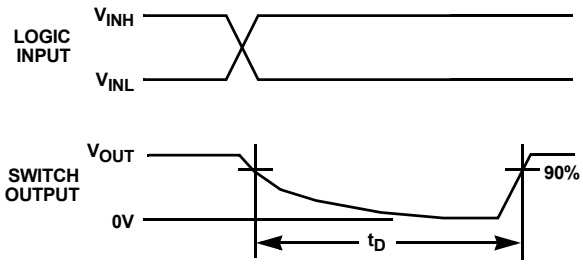

FIGURE 2A. MEASUREMENT POINTS

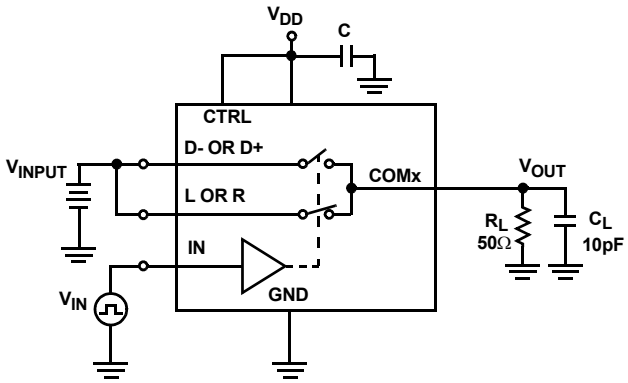

Repeat test for all switches. C_L includes fixture and stray capacitance.

FIGURE 2B. TEST CIRCUIT

FIGURE 2. BREAK-BEFORE-MAKE TIME

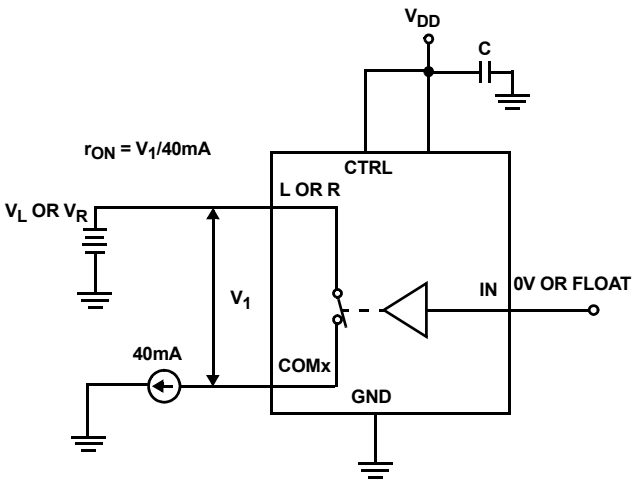

Repeat test for all switches.

FIGURE 3. AUDIO r_{ON} TEST CIRCUIT

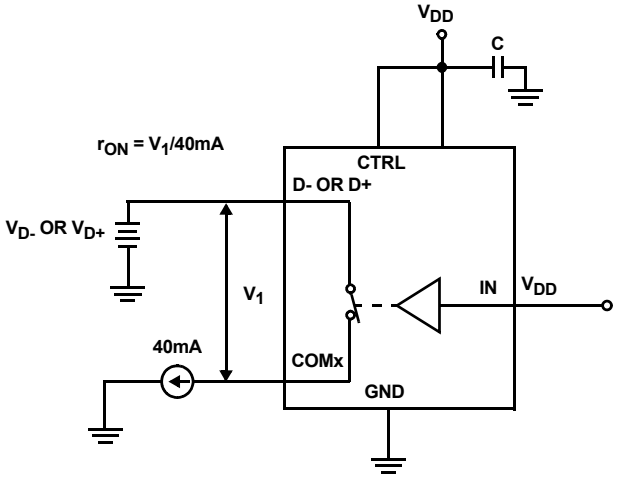

Repeat test for all switches.

FIGURE 4. USB r_{ON} TEST CIRCUIT

Test Circuits and Waveforms (Continued)

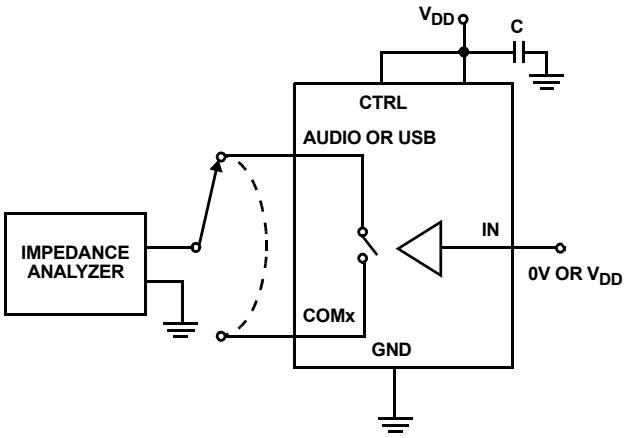

Repeat test for all switches.

FIGURE 5. CAPACITANCE TEST CIRCUIT

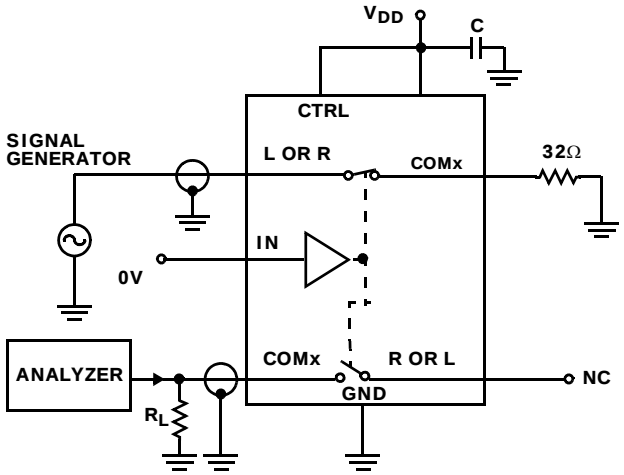

Signal direction through switch is reversed, worst case values are recorded. Repeat test for all switches.

FIGURE 6. AUDIO CROSSTALK TEST CIRCUIT

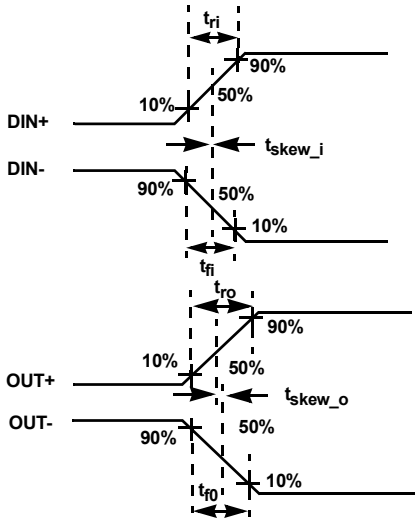

FIGURE 7A. MEASUREMENT POINTS

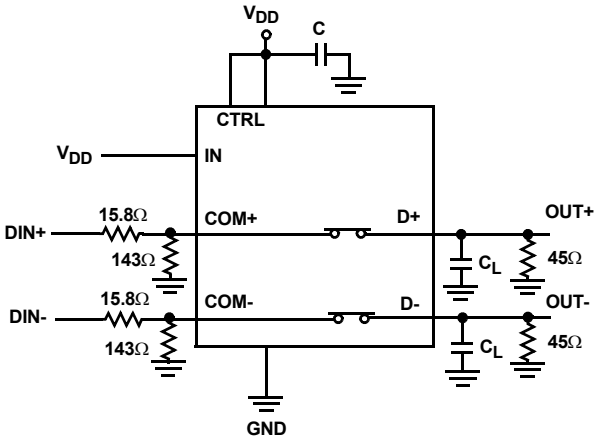

|tro - tri| Delay Due to Switch for Rising Input and Rising Output Signals.

|tfo - tfi| Delay Due to Switch for Falling Input and Falling Output Signals.

|tskew_0| Change in Skew through the Switch for Output Signals.

|tskew_i| Change in Skew through the Switch for Input Signals.

FIGURE 7B. TEST CIRCUIT

FIGURE 7. SKEW TEST

Typical Application Block Diagrams

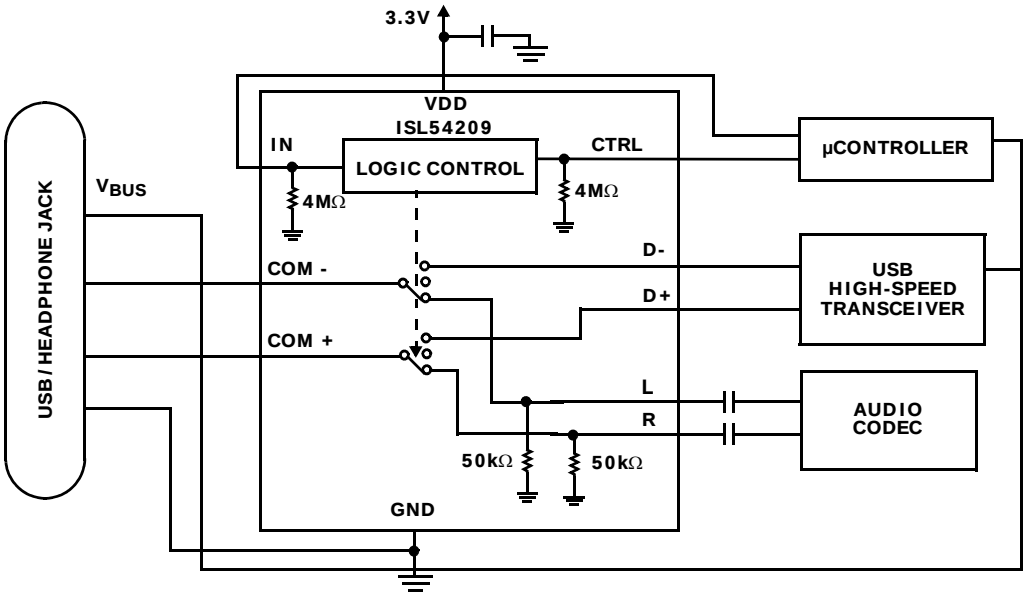

FIGURE 8. LOGIC CONTROL VIA MICRO-PROCESSOR

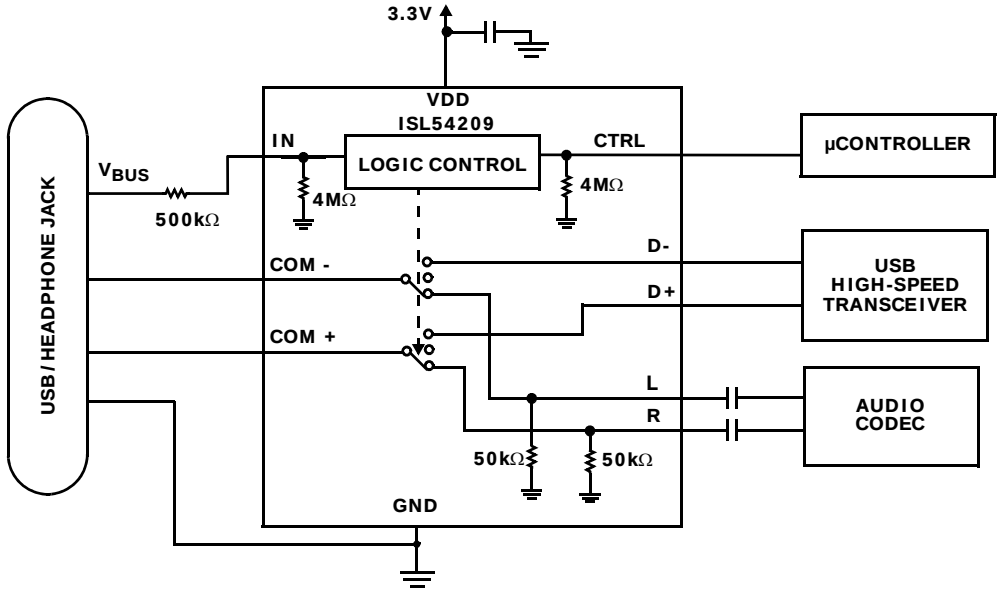

FIGURE 9. LOGIC CONTROL VIA V_{BUS} VOLTAGE FROM COMPUTER OR USB HUB

Detailed Description

The ISL54209 device is a dual single pole/double throw (SPDT) analog switch that operates from a single DC power supply in the range of 2.5V to 5.0V. It was designed to function as a dual 2 to 1 multiplexer to select between USB differential data signals and audio L and R stereo signals. It comes in tiny µTQFN and TDFN packages for use in MP3 players, PDAs, cellular phones and other personal media players.

The part consists of two 2.5Ω audio switches and two 5Ω USB switches. The audio switches can accept signals that swing below ground. They were designed to pass audio left and right stereo signals, that are ground referenced, with minimal distortion. The USB switches were designed to pass high-speed USB differential data signals with minimal edge and phase distortion.

The ISL54209 was specifically designed for MP3 players, personal media players and cellular phone applications that need to combine the audio headphone jack and the USB data connector into a single shared connector, thereby saving space and component cost. “Typical Application Block Diagrams” on page 10 of this functionality are shown in Figures 8 and 9.

The ISL54209 has a single logic control pin (IN) that selects between the audio switches and the USB switches. This pin can be driven Low or High to switch between the audio CODEC drivers and USB transceiver of the MP3 player or cellular phone. The ISL54209 also contains a logic control pin (CTRL) that when driven Low while IN is Low, opens all switches and puts the part into a low power state, drawing typically 1nA of I_{DD} current.

Detailed descriptions of the two types of switches are provided in the following sections.

Audio Switches

The two audio switches (L, R) are 2.5Ω switches that can pass signals that swing below ground by as much as 1.5V. They were designed to pass ground reference stereo signals with minimal insertion loss and very low distortion over a ±1V signal range.

Crosstalk between the audio channels is -110dB over the audio band. Crosstalk between the audio channel and USB channel is -95dB at 100kHz. These switches have excellent OFF-isolation, 114dB, over the audio band with a 32Ω load.

Over a signal range of ±1V ($0.707V_{RMS}$) with VDD > 2.7V, these switches have an extremely low r_{ON} resistance variation. They can pass ground referenced audio signals with very low distortion (<0.06% THD+N) when delivering 15.6mW into a 32Ω headphone speaker load. See Figures 10 and 11.

These switches are bi-directional switches. In typical applications, the audio drivers would be connected at the L and R side of the switch and the speaker loads would be connected at the COM side of the switch.

The audio switches are active (turned ON) whenever the IN voltage is ≤ 0.5V or floating and the CTRL voltage ≥ to 1.4V.

USB Switches

The two USB switches (D+, D-) are bidirectional switches that can pass rail-to-rail signals. When powered with a 3.3V supply, these switches have a nominal r_{ON} of 5Ω over the signal range of 0V to 400mV with a r_{ON} flatness of 0.45Ω. The r_{ON} matching between the D+ and D- switches over this signal range is only 0.05Ω ensuring minimal impact by the switches to USB high speed signal transitions. As the signal level increases, the r_{ON} resistance increases. At a signal level of 3.3V, the switch resistance is nominally 25Ω.

The USB switches were specifically designed to pass USB 2.0 high-speed (480Mbps) differential signals typically in the range of 0V to 400mV. They have low capacitance and high bandwidth to pass the USB high-speed signals with minimum edge and phase distortion to meet USB 2.0 high speed signal quality specifications. See Figure 12.

The USB switches can also pass USB full-speed signals (12Mbps) with minimal distortion and meet all the USB requirements for USB 2.0 full-speed signaling. See Figure 13 for Full-speed Eye Pattern taken with switch in the signal path.

The USB switches are active (turned ON) whenever the IN voltage is ≥ to 1.4V.

COM+, COM-, 1D-, 1D+, 2D-, AND 2D+ ARE OVERVOLTAGE TOLERANT UP TO 5.5V AND DOWN TO -1.5V

For normal operation, the signal range for the USB switches is from -1V to V_{DD}. During normal operation, the signal voltage at D- and D+ should not be allowed to exceed the V_{DD} voltage rail or go below ground by more than -1.0V. However, the ISL54209, with a VDD supply voltage in the range of 0V to 5.0V, can withstand an overvoltage of up to 5.5V or down to -1.5V applied at its COM pins (COM-, COM+) and/or USB signal pins (1D-, 1D+, 2D-, 2D+) without damage. In this overvoltage condition, the part draws <1mA of current and causes no stress to the IC. Note: When in the overvoltage state, the fault voltage at a COM pin will pass thru the USB switch to the signal side of the switch, so the media player’s USB transceiver must have protection circuitry to protect it from damage.

ISL54209 Operation

The following will discuss using the ISL54209 in the “Typical Application Block Diagrams” on page 10 shown in Figures 8 and 9.

VDD SUPPLY

The DC power supply connected at VDD pin provides the required bias voltage for proper switch operation. The

part can operate with a supply voltage in the range of 2.5V to 5.0V.

In a typical USB/Audio application for portable battery powered devices, the V_{DD} voltage will come from a battery or an LDO and be in the range of 2.7V to 3.6V. For best possible USB full-speed operation (12Mbps), it is recommended that the V_{DD} voltage be $\geq$ 2.5V in order to get a USB data signal level above 2.5V.

LOGIC CONTROL

The state of the ISL54209 device is determined by the voltage at the IN pin and the CTRL pin. These logic pins are 1.8V logic compatible when V_{DD} is in the range of 2.7V to 3.6V and can be controlled by a standard microprocessor. The part has three states or modes of operation. The Audio Mode, USB Mode and the Low Power Mode. Refer to the "Truth Table" on page 2.

The IN and CTRL pins are internally pulled low through a 4MΩ resistor to ground and can be left floating or tri-stated by the microprocessor. The CTRL control pin is only active when IN is logic "0".

Logic control voltage levels:

IN = Logic "0" (Low) when $V_{IN} \leq 0.5V$ or Floating.
IN = Logic "1" (High) when $V_{IN} \geq 1.4V$
CTRL = Logic "0" (Low) when $\leq 0.5V$ or Floating.
CTRL = Logic "1" (High) when $\geq 1.4V$

Audio Mode

If the IN pin = Logic "0" and CTRL pin = Logic "1", the part will be in the Audio mode. In Audio mode, the L (left) and R (right) 2.5Ω audio switches are ON and the D- and D+ 5Ω switches are OFF (high impedance).

When nothing is plugged into the common connector or a headphone is plugged into the common connector, the µprocessor will sense that there is no voltage at the V_{BUS} pin of the connector and will drive and hold the IN control pin of the ISL54209 low. As long as CTRL = Logic "1," the ISL54209 part will be in the audio mode and the audio drivers of the media player can drive the headphones and play music.

USB Mode

If the IN pin = Logic "1" and the CTRL pin = Logic "0" or Logic "1", the part will go into USB mode. In USB mode, the D- and D+ 5Ω switches are ON and the L and R 2.5Ω audio switches are OFF (high impedance).

When a USB cable from a computer or USB hub is connected at the common connector, the µprocessor will sense the presence of the 5V V_{BUS} and drive the IN pin voltage high. The ISL54209 part will go into the USB mode. In USB mode, the computer or USB hub transceiver and the MP3 player or cell phone USB transceiver are connected and digital data will be able to be transmitted back and forth.

When the USB cable is disconnected, the µprocessor will sense that the 5V V_{BUS} voltage is no longer connected and will drive the IN pin low and put the part back into the Audio or Low Power Mode.

Low Power Mode

If the IN pin = Logic "0" and CTRL pin = Logic "0", the part will be in the Low Power mode. In the Low Power mode, the audio switches and the USB switches are OFF. In this state, the device draws typically 1nA of current.

In Low Power mode, the OFF-isolation and crosstalk between switch cells is minimal for negative swinging signals. Care should be taken to avoid negative swinging signals in this mode of operation. In typical applications, the Low Power state will be applied to the ISL54209 part when the portable media player is in its sleep or hibernate mode to conserve battery power. In the sleep mode, no audio or USB signals are applied to the part.

USING THE COMPUTER V_{BUS} VOLTAGE TO DRIVE THE "IN" PIN

Rather than using a microprocessor to control the IN logic pin, one can directly drive the IN pin using the 5V V_{BUS} voltage from the computer or USB hub. See Figure 9 "Typical Application Block Diagrams" on page 10.

When a headphone or nothing is connected at the common connector, the internal 4MΩ pull-down will pull the IN pin low, putting the ISL54209 in the Audio or Low Power mode, depending on the condition of the CTRL pin.

When a USB cable is connected at the common connector, the voltage at the IN pin will be driven to 5V and the part will automatically go into the USB mode.

When the USB cable is disconnected from the common connector, the voltage at the IN pin will be pulled low by the pull-down resistor and return to the Audio or Low Power mode, depending on the condition of the CTRL pin.

Note: The ISL54209 contains an internal diode between the IN pin and VDD pin. Whenever the IN voltage is greater than the V_{DD} voltage by more than 0.7V, current will flow through this diode into the V_{DD} power supply bus. An external series resistor in the range of 100kΩ to 500kΩ is required at the IN logic pin to limit the current when driving it with the V_{BUS} voltage. This allows the V_{BUS} voltage from a computer or USB hub (4.4V to 5.25V) to drive the IN pin while the V_{DD} voltage is in the range of 2.5V to 3.6V. A 500kΩ resistor will limit the current to 2.76µA and still allow the IN logic voltage to go to around 3.67V, which is will above the required $V_{IN}H$ level of 1.4V. A smaller series resistor can be used but more current will flow.

Typical Performance Curves T_A = +25°C, Unless Otherwise Specified.

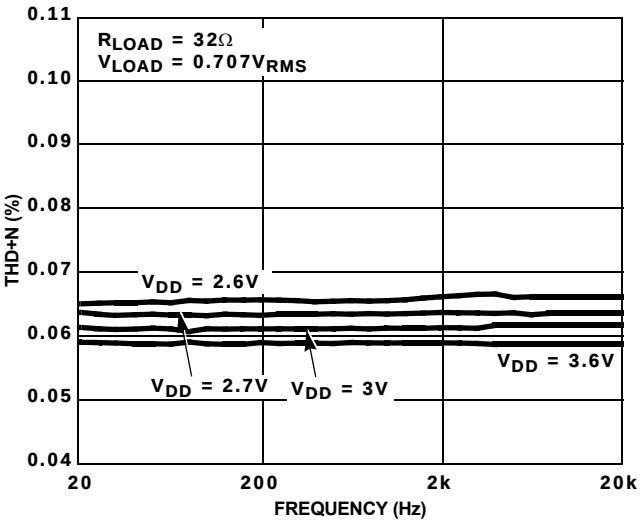

FIGURE 10. THD+N vs SUPPLY VOLTAGE vs FREQUENCY

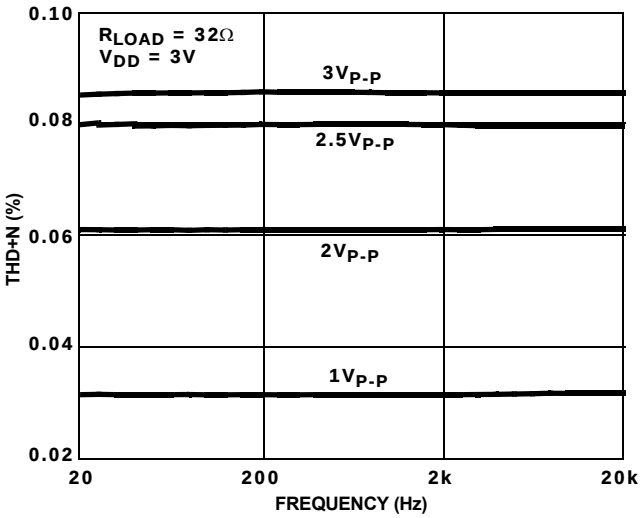

FIGURE 11. THD+N vs SIGNAL LEVELS vs FREQUENCY

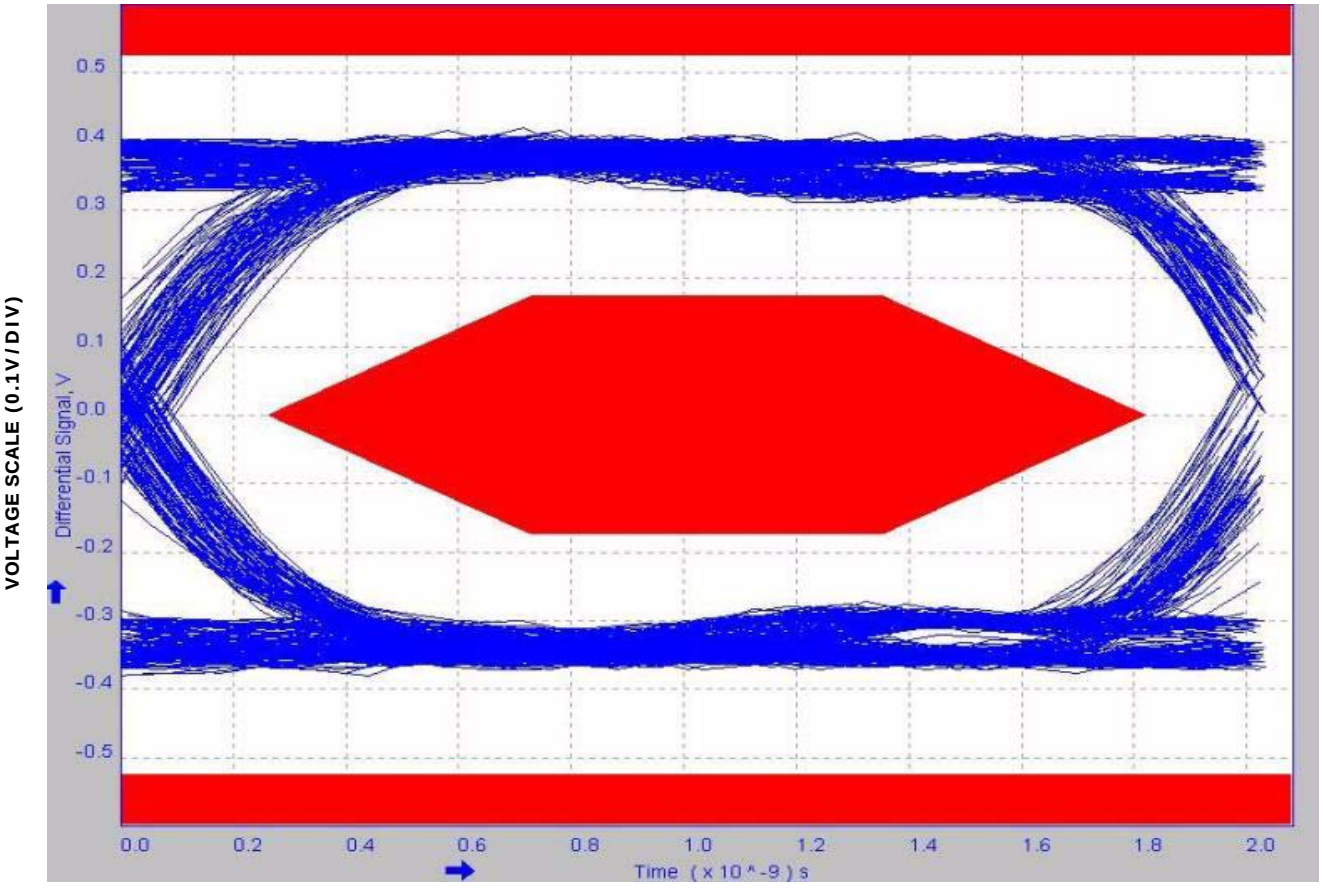

FIGURE 12. EYE PATTERN: 480Mbps WITH USB SWITCHES IN THE SIGNAL PATH

Typical Performance Curves T_A = +25°C, Unless Otherwise Specified. **(Continued)**

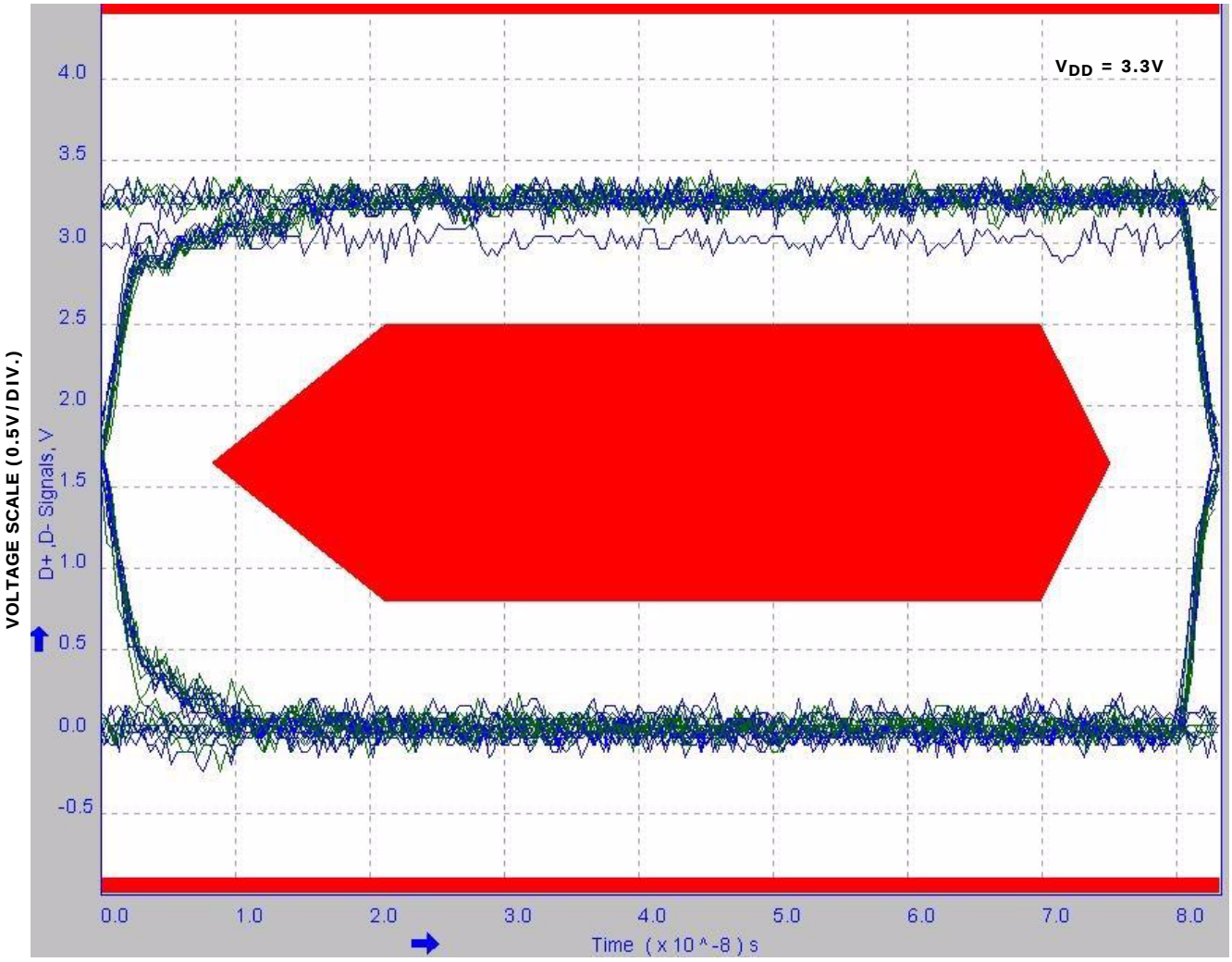

FIGURE 13. EYE PATTERN: 12Mbps USB SIGNAL WITH USB SWITCHES IN THE SIGNAL PATH

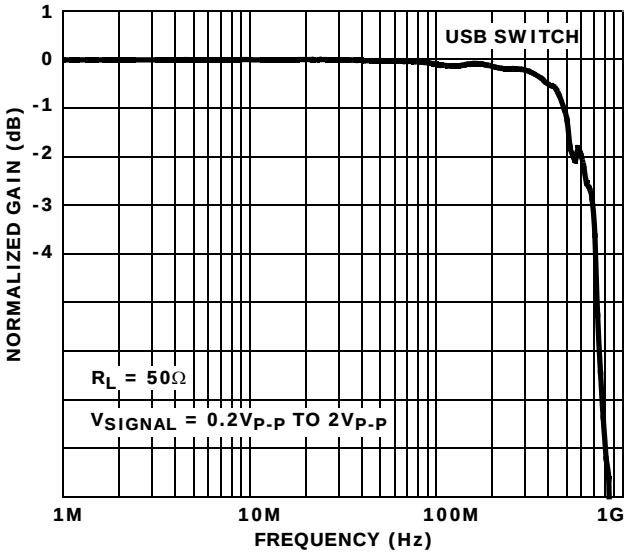

FIGURE 14. FREQUENCY RESPONSE

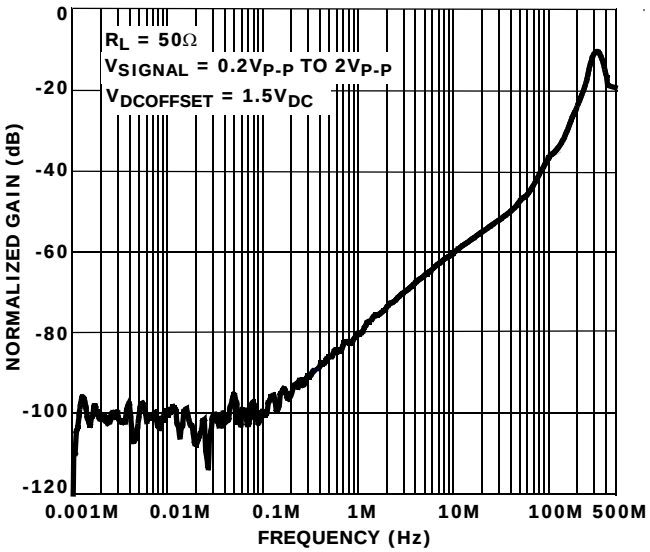

FIGURE 15. OFF-ISOLATION USB SWITCHES

Typical Performance Curves T_A = +25°C, Unless Otherwise Specified. **(Continued)**

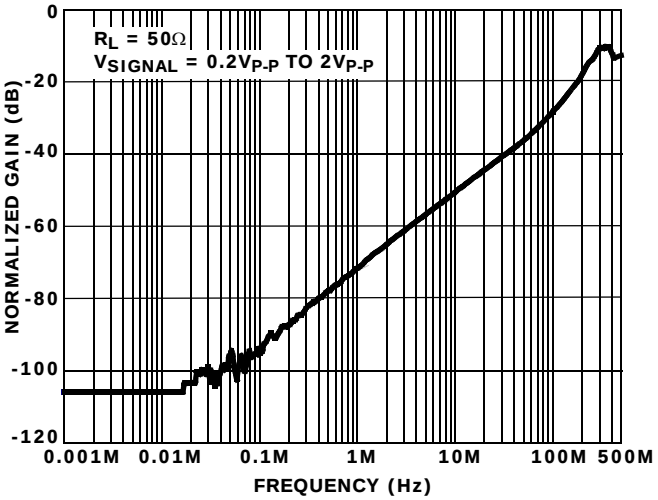

FIGURE 16. OFF-ISOLATION AUDIO SWITCHES

Die Characteristics

SUBSTRATE AND TDFN THERMAL PAD POTENTIAL (POWERED UP):

GND

TRANSISTOR COUNT:

98

PROCESS:

Submicron CMOS

Revision History

The revision history provided is for informational purposes only and is believed to be accurate, but not warranted. Please go to web to make sure you have the latest Rev.

DATE	REVISION	CHANGE
3/8/10	FN6627.4	Made correction to Tjc in Thermal information and corresponding notes as follows: 2.1x1.6 uTQFN package from “48.3” to “100” and 1.8x1.4 uTQFN package from “61.9” to “105”. Added note that is "not direct attach" for both uTQFN packages. Added Latchup to Abs Max Ratings. Updated POD L10.2.1X1.6A to most recent rev. Changes were to convert to new format by moving dimensions from table onto drawing (no dimension changes) Updated POD L10.3X3A to most recent rev. Changes were to convert to new format by moving dimensions from table onto drawing (no dimension changes)
11/24/09	FN6627.3	Added 10 Ld 1.8x1.4 µTQFN option Added MSL note to Ordering Information Added “Boldface limits apply...” to common conditions of Electrical Specifications table. Bolded full temperature specs in spec table. Added Revision History and Products section Added L10.1.8x1.4A package outline drawing Under thermal information for the 2.1 x 1.6 µTQFN & the 1.8 x 1.4 µTQFN, added new boiler plate note for theta JC indicating measurement taken at center of top of package. Moved Note 8 down to 3x3 TDFN.
7/1/08	FN6627.2	Added eval part # to ordering info and updated ESD HBM rating. Applied Intersil standards: Updated pb-free Note 2 to match format, updated over-temp note
4/3/08	FN6627.1	-P2, added Note 3 to order info per Mark Kwoka's new verbiage based on lead finish. Update cross refs accordingly -P3, changed ESD and added apps info for the VBUS control -P5, Note 10 revised to: "Parts are 100% tested at +25°C. Temperature limits established by characterization and are not production tested." from "Parts are 100% tested at +25°C. Over-temperature limits established by characterization and are not production tested."
12/20/07	FN6627.0	Initial Release

Products

Intersil Corporation is a leader in the design and manufacture of high-performance analog semiconductors. The Company's products address some of the industry's fastest growing markets, such as, flat panel displays, cell phones, handheld products, and notebooks. Intersil's product families address power management and analog signal processing functions. Go to www.intersil.com/products for a complete list of Intersil product families.

*For a complete listing of Applications, Related Documentation and Related Parts, please see the respective device information page on intersil.com: ISL54209

To report errors or suggestions for this datasheet, please go to www.intersil.com/askourstaff

FITs are available from our website at http://rel.intersil.com/reports/search.php

© Copyright Intersil Americas LLC 2007-2010. All Rights Reserved.
All trademarks and registered trademarks are the property of their respective owners.

For additional products, see www.intersil.com/en/products.html

Intersil products are manufactured, assembled and tested utilizing ISO9001 quality systems as noted in the quality certifications found at www.intersil.com/en/support/qualandreliability.html

Intersil products are sold by description only. Intersil may modify the circuit design and/or specifications of products at any time without notice, provided that such modification does not, in Intersil's sole judgment, affect the form, fit or function of the product. Accordingly, the reader is cautioned to verify that datasheets are current before placing orders. Information furnished by Intersil is believed to be accurate and reliable. However, no responsibility is assumed by Intersil or its subsidiaries for its use; nor for any infringements of patents or other rights of third parties which may result from its use. No license is granted by implication or otherwise under any patent or patent rights of Intersil or its subsidiaries.

For information regarding Intersil Corporation and its products, see www.intersil.com

Package Outline Drawing

L10.1.8x1.4A

10 LEAD ULTRA THIN QUAD FLAT NO-LEAD PLASTIC PACKAGE
Rev 5, 3/10

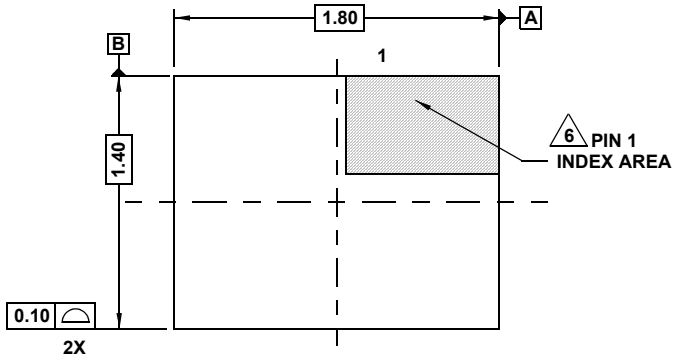

TOP VIEW

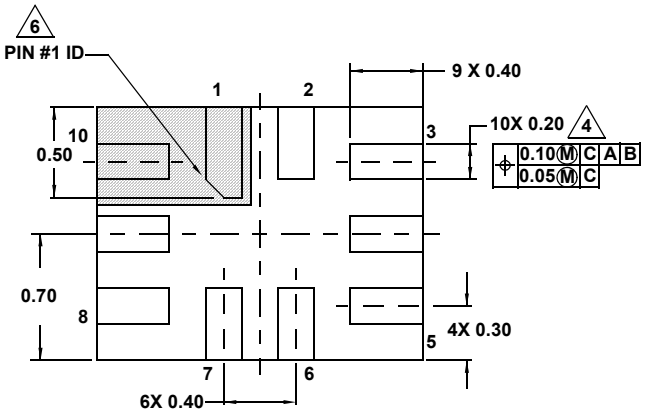

BOTTOM VIEW

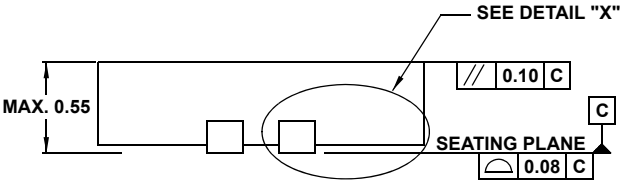

SIDE VIEW

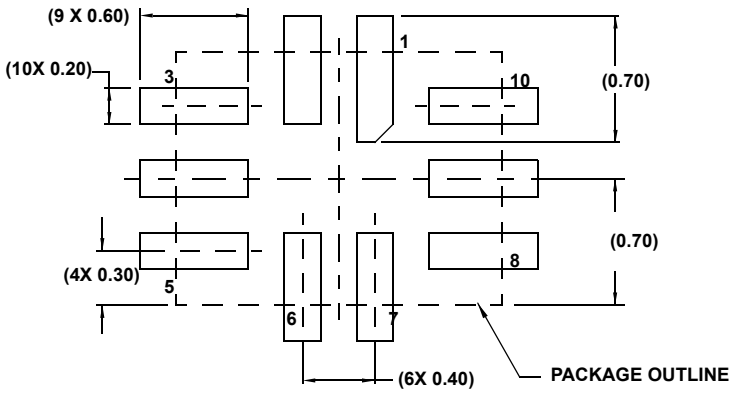

TYPICAL RECOMMENDED LAND PATTERN

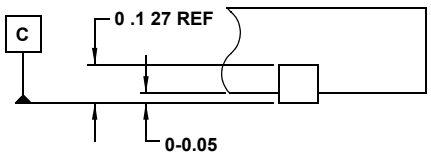

DETAIL "X"

NOTES:

1. Dimensions are in millimeters.
   Dimensions in ( ) for Reference Only.
2. Dimensioning and tolerancing conform to ASME Y14.5m-1994.
3. Unless otherwise specified, tolerance : Decimal ± 0.05
4. Dimension applies to the metallized terminal and is measured between 0.15mm and 0.30mm from the terminal tip.
5. JEDEC reference MO-255.
6. The configuration of the pin #1 identifier is optional, but must be located within the zone indicated. The pin #1 identifier may be either a mold or mark feature.

Package Outline Drawing

L10.2.1x1.6A

10 LEAD ULTRA THIN QUAD FLAT NO-LEAD PLASTIC PACKAGE
Rev 5, 3/10

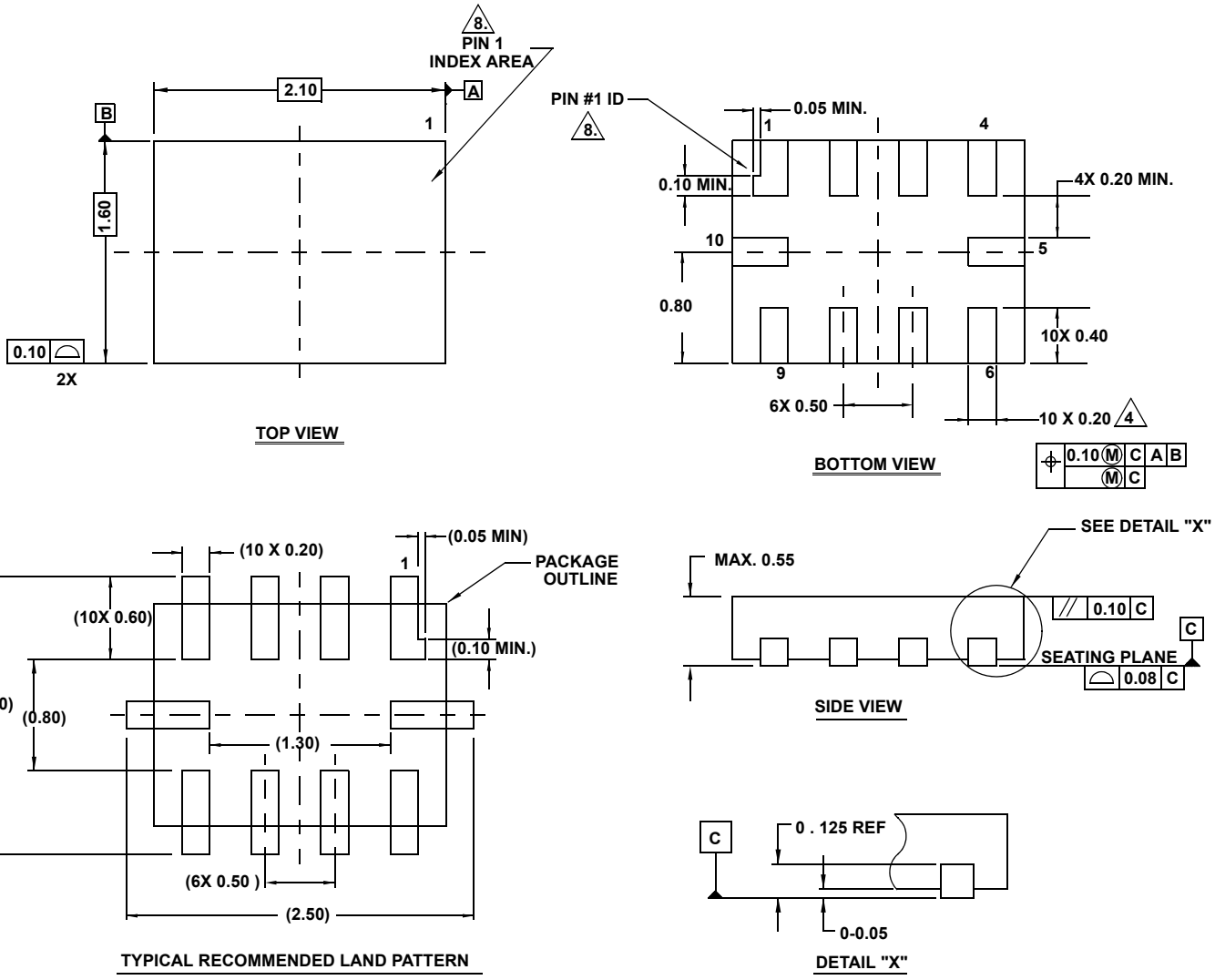

NOTES:

1. Dimensioning and tolerancing conform to ASME Y14.5M-1994.
2. All Dimensions are in millimeters. Angles are in degrees. Dimensions in ( ) for Reference Only.
3. Unless otherwise specified, tolerance : Decimal ± 0.05
4. Lead width dimension applies to the metallized terminal and is measured between 0.15mm and 0.30mm from the terminal tip.
5. Maximum package warpage is 0.05mm.
6. Maximum allowable burrs is 0.076mm in all directions.
7. Same as JEDEC MO-255UABD except:
   No lead-pull-back, MIN. Package thickness = 0.45 not 0.50mm
   Lead Length dim. = 0.45mm max. not 0.42mm.
8. The configuration of the pin #1 identifier is optional, but must be located within the zone indicated. The pin #1 identifier may be either a mold or mark feature.

Package Outline Drawing

L10.3x3A

10 LEAD THIN DUAL FLAT NO-LEAD PLASTIC PACKAGE
Rev 5, 3/10

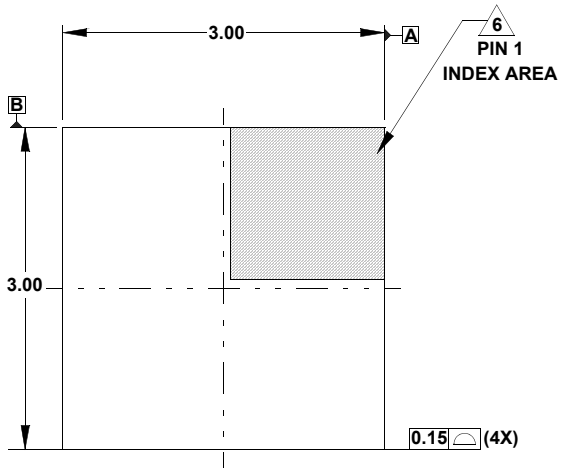

TOP VIEW

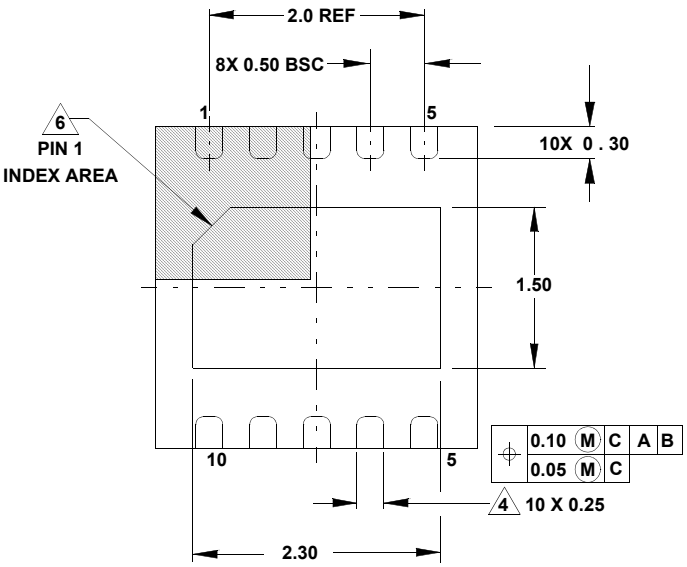

BOTTOM VIEW

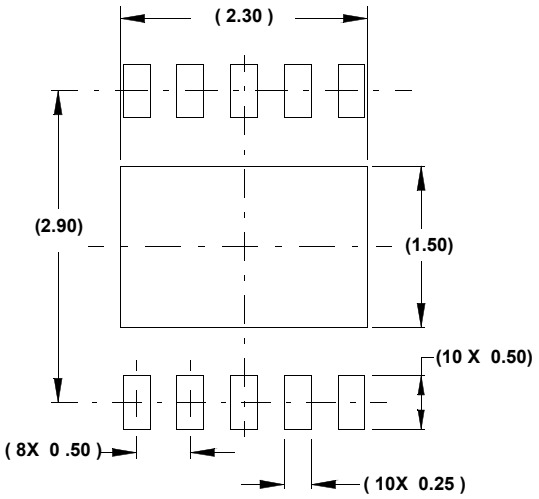

TYPICAL RECOMMENDED LAND PATTERN

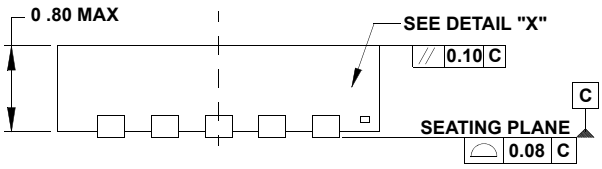

SIDE VIEW

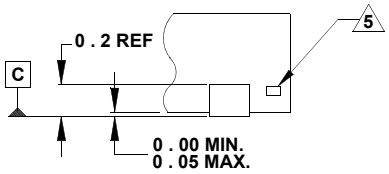

DETAIL "X"

NOTES:

1. Dimensions are in millimeters.
   Dimensions in ( ) for Reference Only.
2. Dimensioning and tolerancing conform to ASME Y14.5m-1994.
3. Unless otherwise specified, tolerance : Decimal ± 0.05
   Angular ±2.50°
4. Dimension applies to the metallized terminal and is measured between 0.15mm and 0.30mm from the terminal tip.
5. Tiebar shown (if present) is a non-functional feature.
6. The configuration of the pin #1 identifier is optional, but must be located within the zone indicated. The pin #1 identifier may be either a mold or mark feature.
7. Compliant to JEDEC MO-229-WEED-3 except exposed pad length (2.30mm).

Looking for pricing, stock, or lifecycle information?

Click below to explore more details on WIN SOURCE:

- View ISL54209IRUZ-T on WIN SOURCE
- Intersil Information

Optimize Your Supply Chain with WIN SOURCE Solutions

- Global Sourcing Solution
- Obsolete Management
- Cost Control Management
- Shortage Management
- Alternative Solution
- Excess Inventory Management