THE DATASHEET OF

ISL8483EIBZ-T

www.win-source.net 0086-755-83957316

ISL8483E, ISL8485E

ESD Protected to ±15kV, 5V, Low Power, High Speed or Slew Rate Limited RS-485/RS-422 Transceivers

FN6048
Rev.13.00
Sep 24, 2018

The ISL8483E and ISL8485E are ESD protected, BiCMOS 5V powered, single transceivers that meet both the RS-485 and RS-422 standards for balanced communication. Each driver output/receiver input is protected against ±15kV ESD strikes without latch-up. Unlike competitive devices, this Renesas family is specified for 10% tolerance supplies (4.5V to 5.5V).

The ISL8483E uses slew rate limited drivers that reduce EMI and minimize reflections from improperly terminated transmission lines or unterminated stubs in multidrop and multipoint applications.

Data rates up to 10Mbps are achievable by using the ISL8485E, which features higher slew rates.

Both devices present a “single unit load” to the RS-485 bus, which allows up to 32 transceivers on the network.

Receiver (Rx) inputs feature a “fail-safe if open” design, which ensures a logic high Rx output if Rx inputs are floating.

Driver (Tx) outputs are short-circuit protected even for voltages exceeding the power supply voltage. Additionally, on-chip thermal shutdown circuitry disables the Tx outputs to prevent damage if power dissipation becomes excessive.

These half duplex configurations multiplex the Rx inputs and Tx outputs to allow transceivers with Rx and Tx disable functions in 8 Ld packages.

Related Literature

For a full list of related documents, visit our website:

- ISL8483E and ISL8485E product pages

Features

- Pb-Free (RoHS compliant)
- Extended industrial temperature options (+125°C)
- RS-485 I/O pin ESD protection . . . . . ±15kV HBM
  - Class 3 ESD level on all other pins. . . . . >7kV HBM
- Specified for 10% tolerance supplies
- High data rate version (ISL8485E). . . . . up to 10Mbps
- Slew rate limited version for error free data transmission (ISL8483E) . . . . . up to 250kbps
- Single unit load allows up to 32 devices on the bus
- 1nA low current Shutdown mode (ISL8483E)
- Low quiescent current:
  - 160µA (ISL8483E)
  - 500µA (ISL8485E)
- -7V to +12V common-mode input voltage range
- Three-state Rx and Tx outputs
- 30ns propagation delays, 5ns skew (ISL8485E)
- Operate from a single +5V supply (10% tolerance)
- Current limiting and thermal shutdown for driver overload protection

Applications

- Factory automation
- Security networks
- Building environmental control systems
- Industrial/process control networks
- Level translators (such as RS-232 to RS-422)
- RS-232 “extension cords”

TABLE 1. SUMMARY OF FEATURES

PART NUMBER	HALF/FULL DUPLEX	NO. OF DEVICES ALLOWED ON BUS	DATA RATE (Mbps)	SLEW-RATE LIMITED?	RECEIVER/DRIVER ENABLE?	QUIESCENT I_{CC} (µA)	LOW POWER SHUTDOWN?	PIN COUNT
ISL8483E	Half	32	0.25	Yes	Yes	160	Yes	8
ISL8485E	Half	32	10	No	Yes	500	No	8

Typical Operating Circuit

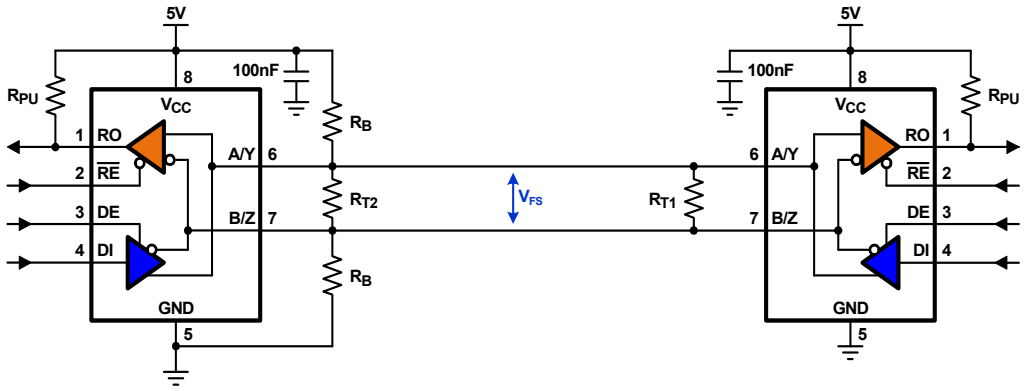

To calculate the resistor values, refer to TB509

Ordering Information

PART NUMBER (Notes 3, 4)	PART MARKING	TEMP. RANGE (°C)	TAPE AND REEL (UNITS) (Note 2)	PACKAGE (RoHS COMPLIANT)	PKG. DWG. #
ISL8483EIBZ	8483 EIBZ	-40 to +85	-	8 Ld SOIC	M8.15
ISL8483EIBZ-T	8483 EIBZ	-40 to +85	2.5k	8 Ld SOIC	M8.15
ISL8485EABZ	8485 EABZ	-40 to +125	-	8 Ld SOIC	M8.15
ISL8485EABZ-T	8485 EABZ	-40 to +125	2.5k	8 Ld SOIC	M8.15
ISL8485ECBZ	8485 ECBZ	0 to +70	-	8 Ld SOIC	M8.15
ISL8485ECBZ-T	8485 ECBZ	0 to +70	2.5k	8 Ld SOIC	M8.15
ISL8485EIBZ	8485 EIBZ	-40 to +85	-	8 Ld SOIC	M8.15
ISL8485EIBZ-T	8485 EIBZ	-40 to +85	2.5k	8 Ld SOIC	M8.15
ISL8485EIPZ	ISL 8485EIPZ	-40 to +85	-	8 Ld PDIP (Note 1)	E8.3

NOTES:

1. Pb-free PDIPs can be used for through hole wave solder processing only. They are not intended for use in reflow solder processing applications.
2. Refer to TB347 for details about reel specifications.
3. These Pb-free plus anneal products employ special Pb-free material sets; molding compounds/die attach materials and 100% matte tin plate termination finish, which are RoHS compliant and compatible with both SnPb and Pb-free soldering operations. Pb-free products are MSL classified at Pb-free peak reflow temperatures that meet or exceed the Pb-free requirements of IPC/JEDEC J STD-020.
4. For Moisture Sensitivity Level (MSL), refer to the product information pages for the ISL8483E and the ISL8485E. For more information on MSL, refer to TB363.

Pin Configuration

ISL8483E, ISL8485E
(8 LD PDIP, SOIC)
TOP VIEW

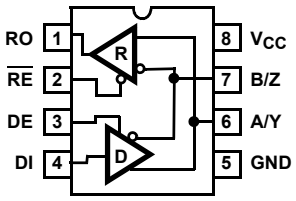

Pin Descriptions

PIN	FUNCTION
RO	Receiver output: RO is high if A > B by at least 0.2V; RO is low if A < B by 0.2V or more; RO is high if A and B are unconnected (floating).
$\overline{RE}$	Receiver output enable. RO is enabled when $\overline{RE}$ is low; RO is high impedance when $\overline{RE}$ is high.
DE	Driver output enable. The driver outputs Y and Z are enabled by bringing DE high. They are high impedance when DE is low.
DI	Driver input. A low on DI forces output Y low and output Z high. Similarly, a high on DI forces output Y high and output Z low.
GND	Ground connection.
A/Y	±15kV HBM ESD protected, RS-485, RS-422 level noninverting receiver input and noninverting driver output. Pin is an input (A) if DE = 0; pin is an output (Y) if DE = 1.
$\overline{B/Z}$	±15kV HBM ESD protected, RS-485, RS-422 level inverting receiver input and inverting driver output. Pin is an input (B) if DE = 0; pin is an output (Z) if DE = 1.
V_{CC}	System power supply input (4.5V to 5.5V).

Truth Tables

TRANSMITTING

INPUTS			OUTPUTS	
$\overline{RE}$	DE	DI	Z	Y
X	1	1	0	1
X	1	0	1	0
0	0	X	High-Z	High-Z
1	0	X	High-Z *	High-Z *

*Shutdown mode for ISL8483E (see Note 11)

RECEIVING

INPUTS			OUTPUT
$\overline{RE}$	DE	A-B	RO
0	0	$V_{AB} \geq 0.2V$	1
0	0	$0.2V > V_{AB} > -0.2V$	Undetermined
0	0	$V_{AB} \leq -0.2V$	0
0	0	Inputs Open	1
1	0	X	High-Z *
1	1	X	High-Z

*Shutdown mode for ISL8483E (see Note 11)

Absolute Maximum Ratings

V_{CC} to Ground 7V
Input Voltages
DI, DE, $\overline{RE}$ . . . . . -0.5V to (V_{CC} +0.5V)
Input/Output Voltages
A/Y, B/Z . . . . . -8V to +12.5V
RO . . . . . -0.5V to (V_{CC} +0.5V)
Short-Circuit Duration
Y, Z . . . . . Continuous
ESD Rating . . . . . See "ESD PERFORMANCE"

Thermal Information

Thermal Resistance (Typical, Note 5)	θ_{JA} (°C/W)
8 Ld SOIC Package	170
8 Ld PDIP Package*	140

Maximum Junction Temperature (Plastic Package) . . . . . +150°C
Maximum Storage Temperature Range . . . . . -65°C to +150°C
Pb-free reflow profile . . . . . see TB493
*Pb-free PDIPs can be used for through hole wave solder processing only. They are not intended for use in reflow solder processing applications.

Operating Conditions

Temperature Range
ISL8485ECx . . . . . 0°C to +70°C
ISL848xEIx . . . . . -40°C to +85°C
ISL8485EAx . . . . . -40°C to +125°C

CAUTION: Do not operate at or near the maximum ratings listed for extended periods of time. Exposure to such conditions can adversely impact product reliability and result in failures not covered by warranty.

NOTE:

5. θ_{JA} is measured with the component mounted on a low-effective thermal conductivity test board in free air. Refer to TB379 for details.

Electrical Specifications

Test Conditions: V_{CC} = 4.5V to 5.5V; unless otherwise specified. Typical values are at V_{CC} = 5V, T_A = +25°C, (Note 6)

PARAMETER	SYMBOL	TEST CONDITIONS		TEMP (°C)	MIN (Note 16)	TYP	MAX (Note 16)	UNIT
DC CHARACTERISTICS								
Driver Differential V_{OUT} (No Load)	V_{OD1}			Full	-	-	V_{CC}	V
Driver Differential V_{OUT} (With Load)	V_{OD2}	R = 50Ω (RS-422), (Figure 1 on page 6)		Full	2	3	-	V
		R = 27Ω (RS-485), (Figure 1 on page 6)		Full	1.5	2.3	5	V
Change in Magnitude of Driver Differential V_{OUT} for Complementary Output States	ΔV_{OD}	R = 27Ω or 50Ω, (Figure 1 on page 6)		Full	-	0.01	0.2	V
Driver Common-Mode V_{OUT}	V_{OC}	R = 27Ω or 50Ω, (Figure 1 on page 6)		Full	-	-	3	V
Change in Magnitude of Driver Common-Mode V_{OUT} for Complementary Output States	ΔV_{OC}	R = 27Ω or 50Ω, (Figure 1 on page 6)		Full	-	0.01	0.2	V
Logic Input High Voltage	V_{IH}	DE, DI, $\overline{RE}$		Full	2	-	-	V
Logic Input Low Voltage	V_{IL}	DE, DI, $\overline{RE}$		Full	-	-	0.8	V
Logic Input Current	I_{IN1}	DE, DI, $\overline{RE}$ (ISL8483E)		Full	-2	-	2	µA
	I_{IN1}	DI (ISL8485E)		Full	-2	-	2	µA
	I_{IN1}	DE, $\overline{RE}$ (ISL8485E)		Full	-25	-	25	µA
Input Current (A, B), (Note 14)	I_{IN2}	DE = 0V, V_{CC} = 0V or 4.5 to 5.5V	V_{IN} = 12V	Full	-	-	1	mA
			V_{IN} = -7V	Full	-	-	-0.8	mA
Receiver Differential Threshold Voltage	V_{TH}	-7V ≤ V_{CM} ≤ 12V		Full	-0.2	-	0.2	V
Receiver Input Hysteresis	ΔV_{TH}	V_{CM} = 0V		+25	-	70	-	mV
Receiver Output High Voltage	V_{OH}	I_O = -4mA, V_{ID} = 200mV		Full	3.5	-	-	V
Receiver Output Low Voltage	V_{OL}	I_O = -4mA, V_{ID} = 200mV		Full	-	-	0.4	V
Three-State (High Impedance) Receiver Output Current	I_{OZR}	0.4V ≤ V_O ≤ 2.4V		Full	-	-	±1	µA

Electrical Specifications Test Conditions: V_{CC} = 4.5V to 5.5V; unless otherwise specified. Typical values are at V_{CC} = 5V, T_A = +25°C, (Note 6) **(Continued)**

PARAMETER	SYMBOL	TEST CONDITIONS		TEMP (°C)	MIN (Note 16)	TYP	MAX (Note 16)	UNIT
Receiver Input Resistance	R_{IN}	-7V ≤ V_{CM} ≤ 12V		Full	12	-	-	kΩ
No-Load Supply Current, (Note 7)	I_{CC}	ISL8485E, DI, $\overline{RE}$ = 0V or V_{CC}	DE = V_{CC}	Full	-	700	900	µA
			DE = 0V	Full	-	500	565	µA
		ISL8483E, DI, $\overline{RE}$ = 0V or V_{CC}	DE = V_{CC}	Full	-	470	650	µA
			DE = 0V	Full	-	160	250	µA
Shutdown Supply Current	I_{SHDN}	ISL8483E, DE = 0V, $\overline{RE}$ = V_{CC}, DI = 0V or V_{CC}		Full	-	1	50	nA
Driver Short-Circuit Current, V_O = High or Low	I_{OSD1}	DE = V_{CC}, -7V ≤ V_Y or V_Z ≤ 12V, (Note 8)		Full	35	-	250	mA
Receiver Short-Circuit Current	I_{OSR}	0V ≤ V_O ≤ V_{CC}		Full	7	-	85	mA
SWITCHING CHARACTERISTICS (ISL8485E)								
Driver Input to Output Delay	t_{PLH}, t_{PHL}	R_{DIFF} = 54Ω, C_L = 100pF, (Figure 2 on page 7)		Full	18	30	50	ns
Driver Output Skew	t_{SKEW}	R_{DIFF} = 54Ω, C_L = 100pF, (Figure 2 on page 7)		Full	-	2	10	ns
Driver Differential Rise or Fall Time	t_R, t_F	R_{DIFF} = 54Ω, C_L = 100pF, (Figure 2 on page 7)		Full	3	11	25	ns
Driver Enable to Output High	t_{ZH}	C_L = 100pF, SW = GND, (Figure 3 on page 7)		Full	-	17	70	ns
Driver Enable to Output Low	t_{ZL}	C_L = 100pF, SW = V_{CC}, (Figure 3 on page 7)		Full	-	14	70	ns
Driver Disable from Output High	t_{HZ}	C_L = 15pF, SW = GND, (Figure 3 on page 7)		Full	-	19	70	ns
Driver Disable from Output Low	t_{LZ}	C_L = 15pF, SW = V_{CC}, (Figure 3 on page 7)		Full	-	13	70	ns
Receiver Input to Output Delay	t_{PLH}, t_{PHL}	(Figure 4 on page 7)		Full	30	40	150	ns
Receiver Skew | t_{PLH} - t_{PHL} |	t_{SKD}	(Figure 4 on page 7)		+25	-	5	-	ns
Receiver Enable to Output High	t_{ZH}	C_L = 15pF, SW = GND, (Figure 5 on page 8)		Full	-	9	50	ns
Receiver Enable to Output Low	t_{ZL}	C_L = 15pF, SW = V_{CC}, (Figure 5 on page 8)		Full	-	9	50	ns
Receiver Disable from Output High	t_{HZ}	C_L = 15pF, SW = GND, (Figure 5 on page 8)		Full	-	9	50	ns
Receiver Disable from Output Low	t_{LZ}	C_L = 15pF, SW = V_{CC}, (Figure 5 on page 8)		Full	-	9	50	ns
Maximum Data Rate	f_{MAX}	(Note 15)		Full	10	-	-	Mbps
SWITCHING CHARACTERISTICS (ISL8483E)								
Driver Input to Output Delay	t_{PLH}, t_{PHL}	R_{DIFF} = 54Ω, C_L = 100pF, (Figure 2 on page 7)		Full	250	800	2000	ns
Driver Output Skew	t_{SKEW}	R_{DIFF} = 54Ω, C_L = 100pF, (Figure 2 on page 7)		Full	-	160	800	ns
Driver Differential Rise or Fall Time	t_R, t_F	R_{DIFF} = 54Ω, C_L = 100pF, (Figure 2 on page 7)		Full	250	800	2000	vσ
Driver Enable to Output High	t_{ZH}	C_L = 100pF, SW = GND, (Figure 3 on page 7), (Note 9)		Full	250	-	2000	vσ
Driver Enable to Output Low	t_{ZL}	C_L = 100pF, SW = V_{CC}, (Figure 3 on page 7), (Note 9)		Full	250	-	2000	vσ
Driver Disable from Output High	t_{HZ}	C_L = 15pF, SW = GND, (Figure 3 on page 7)		Full	300	-	3000	vσ
Driver Disable from Output Low	t_{LZ}	C_L = 15pF, SW = V_{CC}, (Figure 3 on page 7)		Full	300	-	3000	vσ
Receiver Input to Output Delay	t_{PLH}, t_{PHL}	(Figure 4 on page 7)		Full	250	350	2000	ns
Receiver Skew | t_{PLH} - t_{PHL} |	t_{SKD}	(Figure 4 on page 7)		+25	-	25	-	ns
Receiver Enable to Output High	t_{ZH}	C_L = 15pF, SW = GND, (Figure 5 on page 8), (Note 10)		Full	-	10	50	ns
Receiver Enable to Output Low	t_{ZL}	C_L = 15pF, SW = V_{CC}, (Figure 5 on page 8), (Note 10)		Full	-	10	50	ns

Electrical Specifications Test Conditions: V_{CC} = 4.5V to 5.5V; unless otherwise specified. Typical values are at V_{CC} = 5V, T_A = +25°C, (Note 6) **(Continued)**

PARAMETER	SYMBOL	TEST CONDITIONS	TEMP (°C)	MIN (Note 16)	TYP	MAX (Note 16)	UNIT
Receiver Disable from Output High	t_{HZ}	C_L = 15pF, SW = GND, (Figure 5 on page 8)	Full	-	10	50	ns
Receiver Disable from Output Low	t_{LZ}	C_L = 15pF, SW = V_{CC}, (Figure 5 on page 8)	Full	-	10	50	ns
Maximum Data Rate	f_{MAX}	(Note 15)	Full	250	-	-	kbps
Time to Shutdown	t_{SHDN}	(Note 11)	Full	50	200	600	ns
Driver Enable from Shutdown to Output High	$t_{ZH(SHDN)}$	C_L = 100pF, SW = GND, (Figure 3 on page 7), (Notes 11, 12)	Full	-	-	2000	vσ
Driver Enable from Shutdown to Output Low	$t_{ZL(SHDN)}$	C_L = 100pF, SW = V_{CC}, (Figure 5 on page 8), (Notes 11, 12)	Full	-	-	2000	vσ
Receiver Enable from Shutdown to Output High	$t_{ZH(SHDN)}$	C_L = 15pF, SW = GND, (Figure 5 on page 8), (Notes 11, 13)	Full	-	-	2500	ns
Receiver Enable from Shutdown to Output Low	$t_{ZL(SHDN)}$	C_L = 15pF, SW = V_{CC}, (Figure 5 on page 8), (Notes 11, 13)	Full	-	-	2500	ns
ESD PERFORMANCE							
RS-485 Pins (A/Y, B/Z)		Human Body Model	+25	-	±15	-	kV
All Other Pins			+25	-	>±7	-	kV

NOTES:

6. All currents into device pins are positive; all currents out of device pins are negative. All voltages are referenced to device ground unless otherwise specified.
7. Supply current specification is valid for loaded drivers when DE = 0V.
8. Applies to peak current. See "Typical Performance Curves" on page 10 for more information.
9. When testing the ISL8483E, keep $\overline{RE}$ = 0 to prevent the device from entering SHDN.
10. When testing the ISL8483E, the $\overline{RE}$ signal high time must be short enough (typically <200ns) to prevent the device from entering SHDN.
11. The ISL8483E is put into shutdown by bringing $\overline{RE}$ high and DE low. If the inputs are in this state for less than 50ns, the parts are ensured not to enter shutdown. If the inputs are in this state for at least 600ns, the parts are ensured to have entered shutdown. See "Low Power Shutdown Mode (ISL8483E Only)" on page 9.
12. Keep $\overline{RE}$ = V_{CC}, and set the DE signal low time >600ns to ensure that the device enters SHDN.
13. Set the $\overline{RE}$ signal high time >600ns to ensure that the device enters SHDN.
14. Devices meeting these limits are denoted as "single unit load (1 UL)" transceivers. The RS-485 standard allows up to 32 Unit Loads on the bus.
15. Limits established by characterization and are not production tested.
16. Parameters with MIN and/or MAX limits are 100% tested at +25°C, unless otherwise specified. Temperature limits established by characterization and are not production tested.

Test Circuits and Waveforms

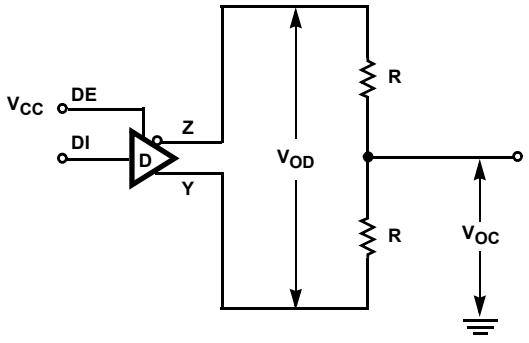

FIGURE 1. DRIVER V_{OD} AND V_{OC}

Test Circuits and Waveforms (Continued)

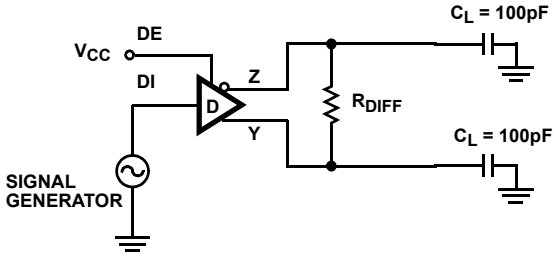

FIGURE 2A. TEST CIRCUIT

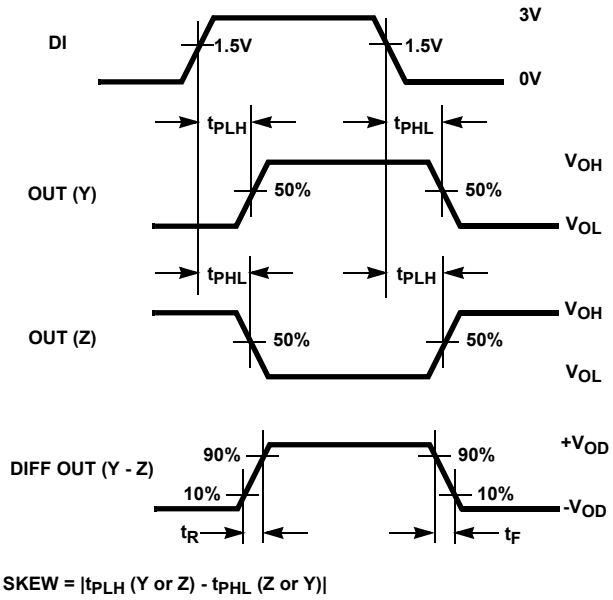

FIGURE 2B. MEASUREMENT POINTS

FIGURE 2. DRIVER PROPAGATION DELAY AND DIFFERENTIAL TRANSITION TIMES

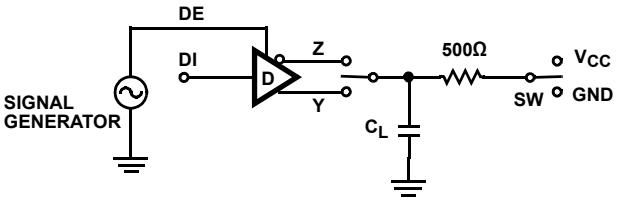

PARAMETER	OUTPUT	$\overline{RE}$	DI	SW	C_L (pF)
t_{HZ}	Y/Z	X	1 / 0	GND	15
t_{LZ}	Y/Z	X	0 / 1	V_{CC}	15
t_{ZH}	Y/Z	0 (Note 9)	1 / 0	GND	100
t_{ZL}	Y/Z	0 (Note 9)	0 / 1	V_{CC}	100
$t_{ZH(SHDN)}$	Y/Z	1 (Note 12)	1 / 0	GND	100
$t_{ZL(SHDN)}$	Y/Z	1 (Note 12)	0 / 1	V_{CC}	100

FIGURE 3A. TEST CIRCUIT

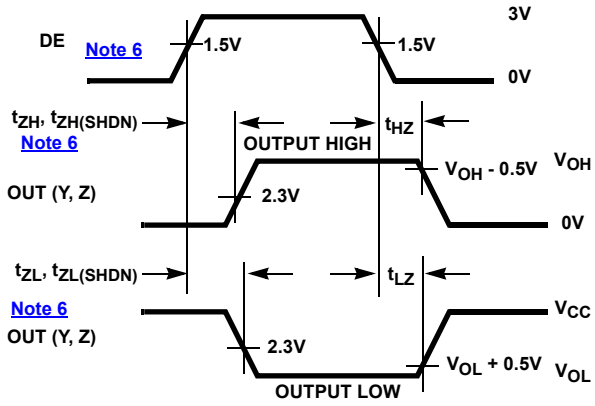

FIGURE 3B. MEASUREMENT POINTS

FIGURE 3. DRIVER ENABLE AND DISABLE TIMES

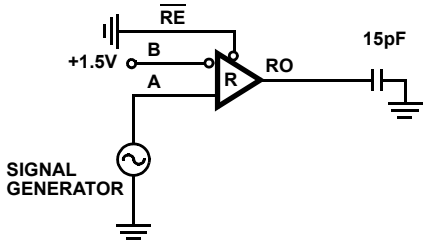

FIGURE 4A. TEST CIRCUIT

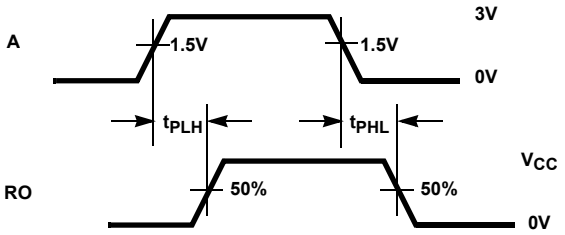

FIGURE 4B. MEASUREMENT POINTS

FIGURE 4. RECEIVER PROPAGATION DELAY

Test Circuits and Waveforms (Continued)

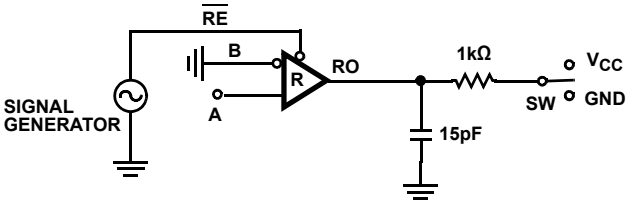

(SHDN) FOR ISL8483E ONLY

PARAMETER	DE	A	SW
t_{HZ}	0	+1.5V	GND
t_{LZ}	0	-1.5V	V_{CC}
t_{ZH} (Note 10)	0	+1.5V	GND
t_{ZL} (Note 10)	0	-1.5V	V_{CC}
$t_{ZH(SHDN)}$ (Note 13)	0	+1.5V	GND
$t_{ZL(SHDN)}$ (Note 13)	0	-1.5V	V_{CC}

FIGURE 5A. TEST CIRCUIT

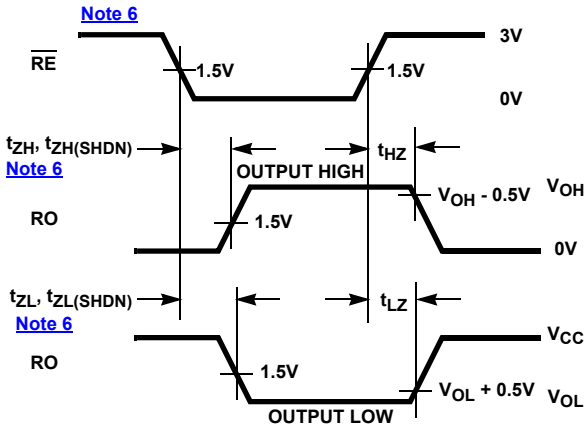

FIGURE 5B. MEASUREMENT POINTS

FIGURE 5. RECEIVER ENABLE AND DISABLE TIMES

Application Information

RS-485 and RS-422 are differential (balanced) data transmission standards for use in long haul or noisy environments. RS-422 is a subset of RS-485, so RS-485 transceivers are also RS-422 compliant. RS-422 is a point-to-multipoint (multidrop) standard that allows only one driver and up to 10 receivers on each bus, assuming one unit load devices. RS-485 is a true multipoint standard that allows up to 32 one unit load devices (any combination of drivers and receivers) on each bus. To allow for multipoint operation, the RS-485 specification requires that drivers handle bus contention without sustaining any damage.

Another important advantage of RS-485 is the extended Common-Mode Range (CMR). The CMR specifies that the driver outputs and receiver inputs withstand signals that range from +12V to -7V. RS-422 and RS-485 are intended for runs as long as 4000 ft, so the wide CMR is necessary to handle ground potential differences and voltages induced in the cable by external fields.

Receiver Features

The devices use a differential input receiver for maximum noise immunity and common-mode rejection. Input sensitivity is ±200mV as required by the RS-422 and RS-485 specifications.

Receiver input impedance surpasses the RS-422 spec of 4kΩ and meets the RS-485 “Unit Load” requirement of 12kΩ minimum.

Receiver inputs function with common-mode voltages as high as ±7V outside the power supplies (for example, +12V and -7V), making them ideal for long networks where induced voltages are a realistic concern.

All the receivers include a “fail-safe if open” function that ensures a high level receiver output if the receiver inputs are unconnected (floating).

Receivers easily meet the data rates supported by the corresponding driver.

ISL8483E and ISL8485E receiver outputs are tri-statable through the active low $\overline{RE}$ input.

Driver Features

The RS-485 and RS-422 drivers are differential output devices that deliver at least 1.5V across a 54Ω load (RS-485) and at least 2V across a 100Ω load (RS-422). The drivers feature low propagation delay skew to maximize bit width and to minimize EMI.

The ISL8483E and ISL8485E drivers are tri-statable using the active high DE input.

The ISL8483E driver outputs are slew rate limited to minimize EMI and to minimize reflections in unterminated or improperly terminated networks. The data rate on these slew rate limited versions is a maximum of 250kbps. The ISL8485E driver outputs are not limited, so faster output transition times allow data rates of at least 10Mbps.

Data Rate, Cables, and Terminations

RS-485 and RS-422 are intended for network lengths up to 4000 ft, but the maximum system data rate decreases as the transmission length increases. Devices operating at 10Mbps are limited to lengths less than 100 feet, and the 250kbps versions can operate at full data rates with lengths in excess of 1000 ft.

Twisted pair cable is the cable of choice for the RS-485 and RS-422 networks. Twisted pair cables tend to pick up noise and other electromagnetically induced voltages as common-mode signals, which are effectively rejected by the differential receivers in these ICs.

Proper termination is imperative when using the 10Mbps devices to minimize reflections. Short networks using the 250kbps versions do not need to be terminated, but terminations are recommended unless power dissipation is an overriding concern.

In point-to-point or point-to-multipoint (single driver on bus) networks, terminate the main cable in its characteristic impedance (typically 120Ω) at the end farthest from the driver. In multi-receiver applications, keep stubs connecting receivers to the main cable as short as possible. In multipoint (multi-driver) systems, terminate the main cable in its characteristic impedance at both ends. Keep stubs that are connecting a transceiver to the main cable as short as possible.

Built-In Driver Overload Protection

The RS-485 specification requires that drivers survive worst case bus contentions undamaged. The ISL848xE devices meet this requirement through driver output short-circuit current limits and on-chip thermal shutdown circuitry.

The driver output stages incorporate short-circuit current limiting circuitry that ensures that the output current never exceeds the RS-485 specification, even at the common-mode voltage range extremes. Also, these devices use a foldback circuit that reduces the short-circuit current and consequently the power dissipation when the contending voltage exceeds either supply.

In the event of a major short-circuit condition, the ISL848xE devices perform a thermal shutdown that disables the drivers whenever the die temperature becomes excessive. This eliminates the power dissipation allowing the die to cool. The drivers automatically re-enable after the die temperature drops about 15°. If the contention persists, the thermal shutdown/re-enable cycle repeats until the fault is cleared. Receivers stay operational during thermal shutdown.

Low Power Shutdown Mode (ISL8483E Only)

These CMOS transceivers all use a fraction of the power required by their bipolar counterparts, but the ISL8483E includes a shutdown feature that reduces the already low quiescent I_{CC} to a 1nA trickle. The ISL8483E enters shutdown whenever the receiver and driver are *simultaneously* disabled ($\overline{RE}$ = V_{CC} and DE = GND) for a period of at least 600ns. Disabling both the driver and the receiver for fewer than 50ns ensures that the ISL8483E does not enter shutdown.

Note that receiver and driver enable times increase when the ISL8483E enables from shutdown. Refer to Notes 9 through Notes 12 on page 6 at the end of the "Electrical Specifications" table for more information.

ESD Protection

All pins on these interface devices include Class 3 Human Body Model (HBM) ESD protection structures, but the RS-485 pins (driver outputs and receiver inputs) incorporate advanced structures allowing them to survive ESD events in excess of ±15kV HBM. The RS-485 pins are particularly vulnerable to ESD damage because they typically connect to an exposed port on the exterior of the finished product. Simply touching the port pins or connecting a cable can cause an ESD event that might destroy unprotected ICs. These new ESD structures protect the device whether or not it is powered up without either allowing any latchup mechanism to activate and without degrading the RS-485 common-mode range of -7V to +12V. The built-in ESD protection eliminates the need for board level protection structures (such as transient suppression diodes) and the associated, undesirable capacitive load that they present.

Human Body Model Testing

As the name implies, the HBM test method emulates the ESD event delivered to an IC during human handling. The tester delivers the charge stored on a 100pF capacitor through a 1.5kΩ current limiting resistor into the pin under test. The HBM method determines an IC's ability to withstand the ESD events typically present during handling and manufacturing.

The RS-485 pin survivability on this high ESD family has been characterized to be in excess of ±15kV for discharges to GND.

Die Characteristics

SUBSTRATE POTENTIAL (POWERED UP):

GND

TRANSISTOR COUNT:

518

PROCESS:

Si Gate CMOS

Typical Performance Curves V_{CC} = 5V, T_A = +25°C, ISL8483E and ISL8485E; unless otherwise specified.

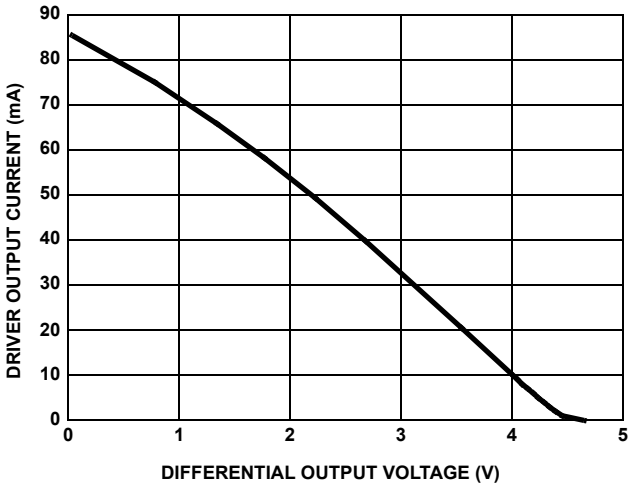

FIGURE 6. DRIVER OUTPUT CURRENT vs DIFFERENTIAL OUTPUT VOLTAGE

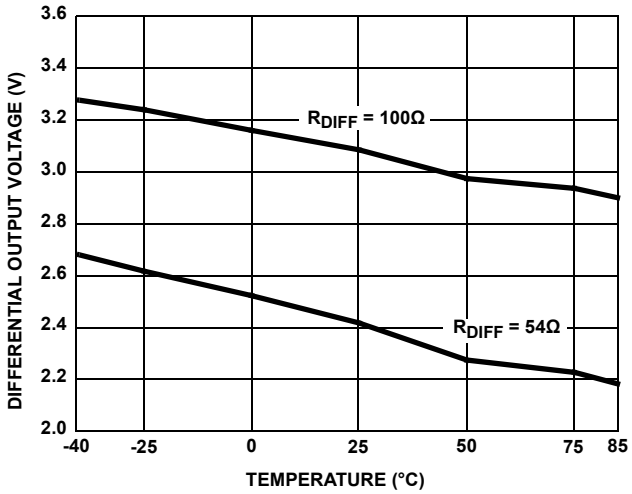

FIGURE 7. DRIVER DIFFERENTIAL OUTPUT VOLTAGE vs TEMPERATURE

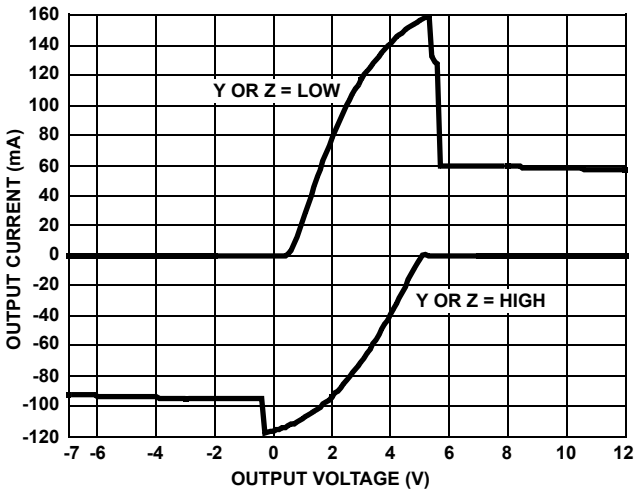

FIGURE 8. DRIVER OUTPUT CURRENT vs SHORT-CIRCUIT VOLTAGE

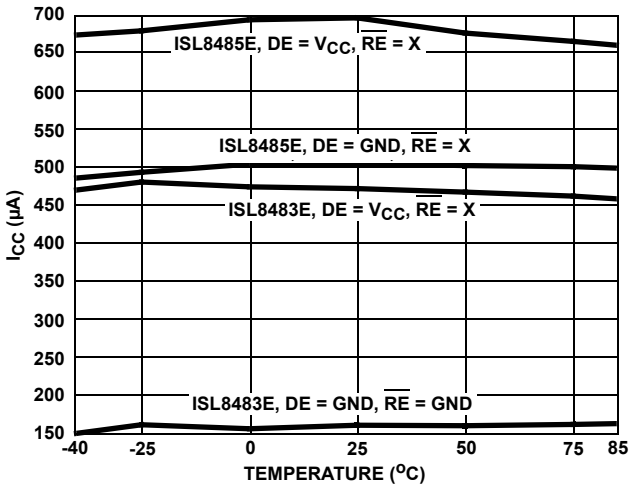

FIGURE 9. SUPPLY CURRENT vs TEMPERATURE

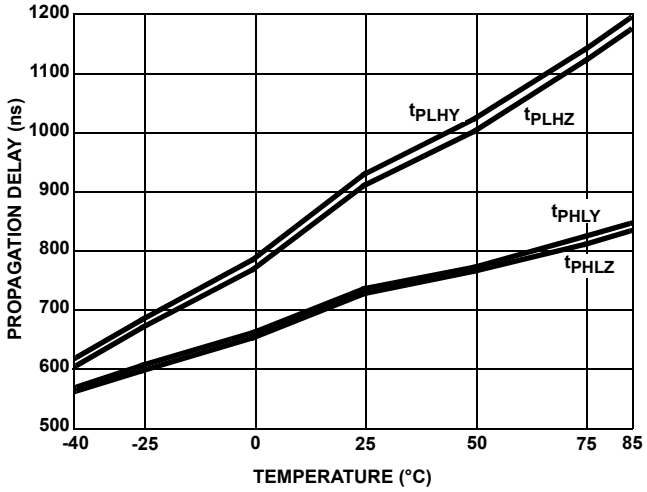

FIGURE 10. DRIVER PROPAGATION DELAY vs TEMPERATURE (ISL8483E)

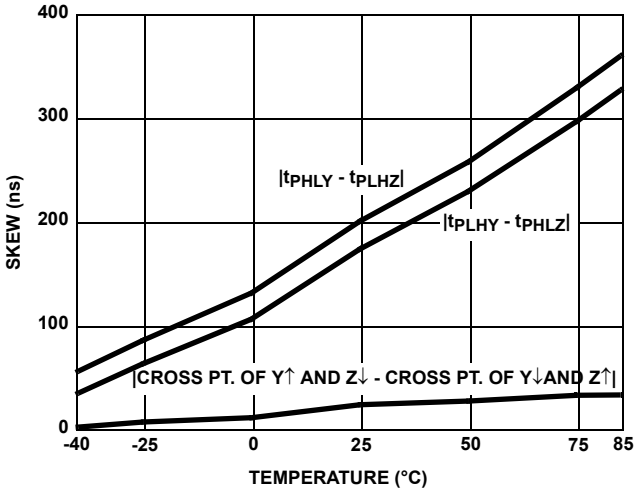

FIGURE 11. DRIVER SKEW vs TEMPERATURE (ISL8483E)

Typical Performance Curves V_{CC} = 5V, T_A = +25°C, ISL8483E and ISL8485E; unless otherwise specified. **(Continued)**

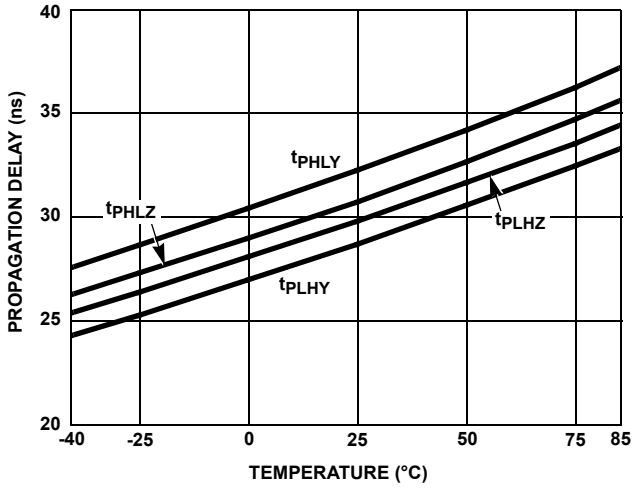

FIGURE 12. DRIVER PROPAGATION DELAY vs TEMPERATURE (ISL8485E)

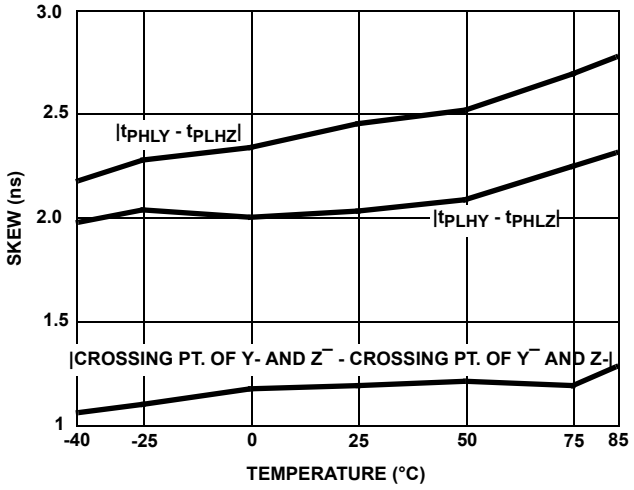

FIGURE 13. DRIVER SKEW vs TEMPERATURE (ISL8485E)

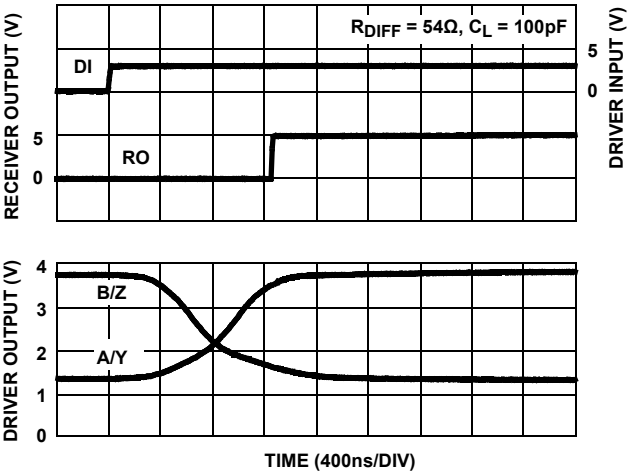

FIGURE 14. DRIVER AND RECEIVER WAVEFORMS, LOW TO HIGH (ISL8483E)

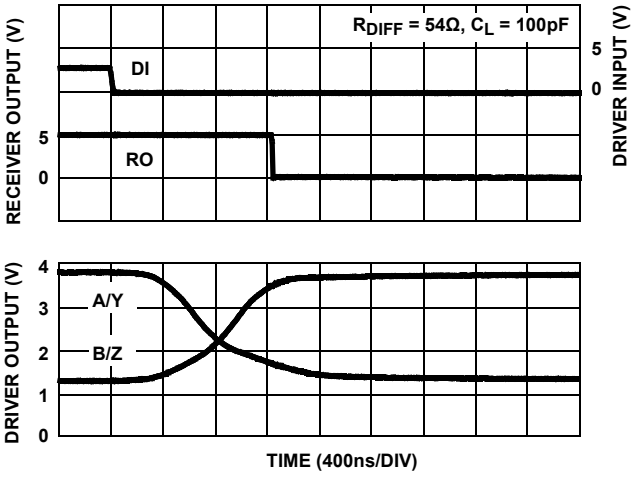

FIGURE 15. DRIVER AND RECEIVER WAVEFORMS, HIGH TO LOW (ISL8483E)

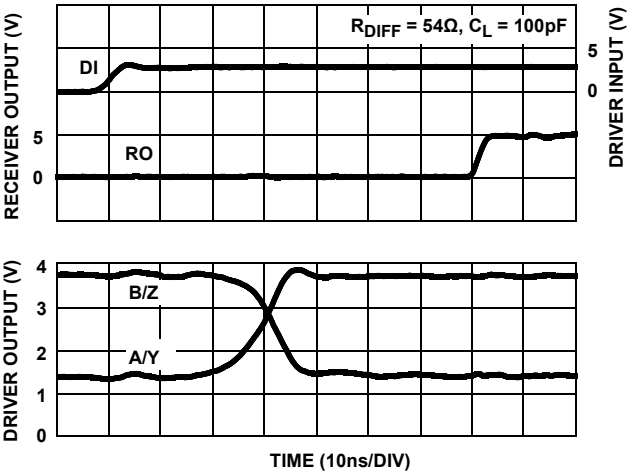

FIGURE 16. DRIVER AND RECEIVER WAVEFORMS, LOW TO HIGH (ISL8485E)

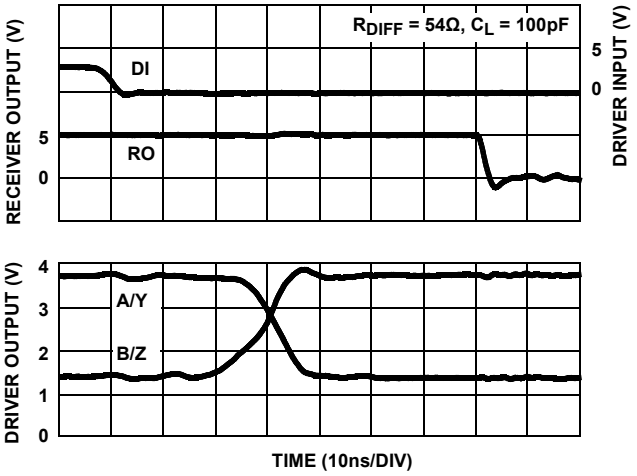

FIGURE 17. DRIVER AND RECEIVER WAVEFORMS, HIGH TO LOW (ISL8485E)

Revision History

The revision history provided is for informational purposes only and is believed to be accurate, but not warranted. Please visit our website to make sure that you have the latest revision.

DATE	REVISION	CHANGE
Sept 24, 2018	FN6048.13	Updated the Ordering Information table by adding tape and reel information, removing part, and updating notes. Updated Typical Operating Circuits on page 2. Removed About Intersil section and updated disclaimer.
Aug 31, 2017	FN6048.12	Updated Receiving Truth table on page 2. Applied Intersil A Renesas Company template.
May 8, 2017	FN6048.11	Applied new header/footer Removed any mention of military version. Updated ordering information table on page 2 as follows: Updated Note 2, added Notes 3, and 5.
Sept 3, 2015	FN6048.10	- Ordering Information Table on page 2. - Added Revision History. - Added About Intersil Verbiage. -Updated POD M8.15 to most current revision with changes as follows: -Revision 1 to Revision 2 Changes: Updated to new POD format by removing table and moving dimensions onto drawing and adding land pattern -Revision 2 to Revision 3 Changes: Changed Note 1 "1982" to "1994" Changed in Typical Recommended Land Pattern the following: 2.41(0.095) to 2.20(0.087) 0.76 (0.030) to 0.60(0.023) 0.200 to 5.20(0.205) -Revision 3 to Revision 4 Changes: Changed Note 1 "1982" to "1994"

Package Outline Drawings

For the most recent package outline drawing, see M8.15.

M8.15

8 lead narrow body small outline plastic package

Rev 4, 1/12

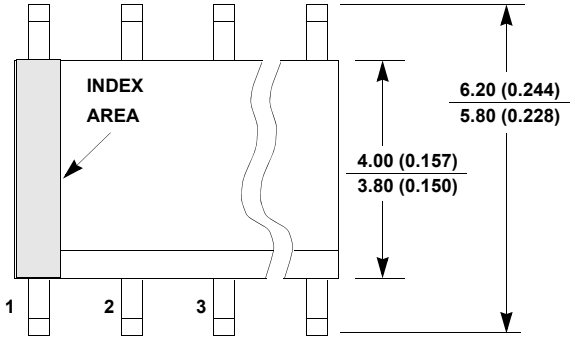

TOP VIEW

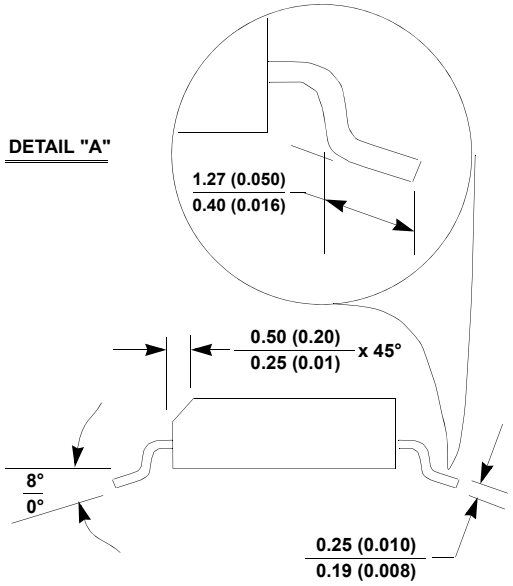

SIDE VIEW "B"

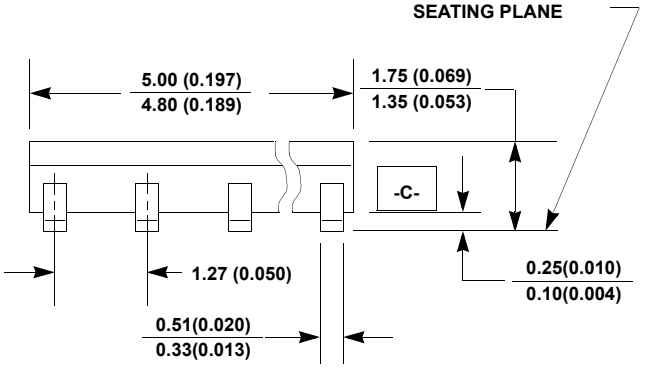

SIDE VIEW "A

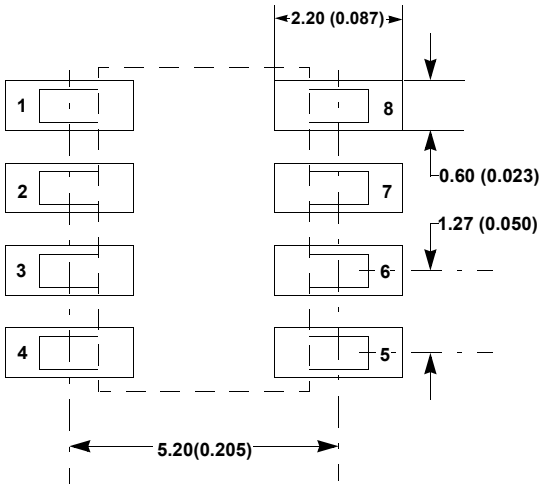

TYPICAL RECOMMENDED LAND PATTERN

NOTES:

17. Dimensioning and tolerancing per ANSI Y14.5M-1994.
18. Package length does not include mold flash, protrusions or gate burrs. Mold flash, protrusion and gate burrs shall not exceed 0.15mm (0.006 inch) per side.
19. Package width does not include interlead flash or protrusions. Interlead flash and protrusions shall not exceed 0.25mm (0.010 inch) per side.
20. The chamfer on the body is optional. If it is not present, a visual index feature must be located within the crosshatched area.
21. Terminal numbers are shown for reference only.
22. The lead width as measured 0.36mm (0.014 inch) or greater above the seating plane, shall not exceed a maximum value of 0.61mm (0.024 inch).
23. Controlling dimension: MILLIMETER. Converted inch dimensions are not necessarily exact.
24. This outline conforms to JEDEC publication MS-012-AA ISSUE C.

For the most recent package outline drawing, see E8.3.

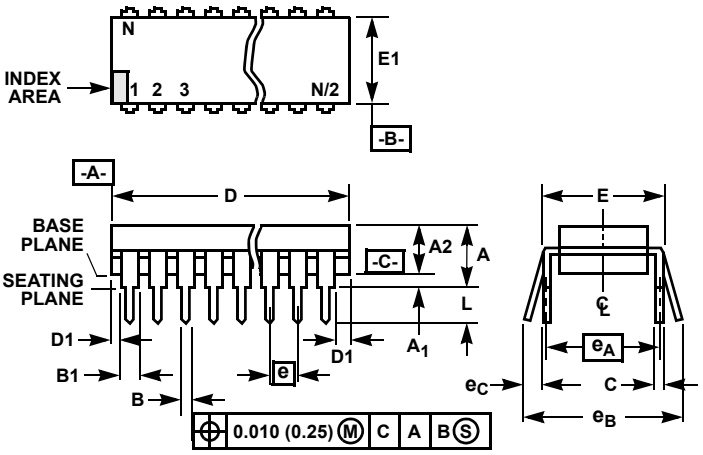

NOTES:

1. Controlling Dimensions: INCH. In case of conflict between English and Metric dimensions, the inch dimensions control.
2. Dimensioning and tolerancing per ANSI Y14.5M-1982.
3. Symbols are defined in the “MO Series Symbol List” in Section 2.2 of Publication No. 95.
4. Dimensions A, A1 and L are measured with the package seated in JEDEC seating plane gauge GS-3.
5. D, D1, and E1 dimensions do not include mold flash or protrusions. Mold flash or protrusions shall not exceed 0.010 inch (0.25mm).
6. E and e_A are measured with the leads constrained to be perpendicular to datum -C-.
7. e_B and e_C are measured at the lead tips with the leads unconstrained. e_C must be zero or greater.
8. B1 maximum dimensions do not include dambar protrusions. Dambar protrusions shall not exceed 0.010 inch (0.25mm).
9. N is the maximum number of terminal positions.
10. Corner leads (1, N, N/2 and N/2 + 1) for E8.3, E16.3, E18.3, E28.3, E42.6 will have a B1 dimension of 0.030 - 0.045 inch (0.76 - 1.14mm).

E8.3 (JEDEC MS-001-BA ISSUE D)

8 LEAD DUAL-IN-LINE PLASTIC PACKAGE

SYMBOL	INCHES		MILLIMETERS		NOTES
	MIN	MAX	MIN	MAX	
A	-	0.210	-	5.33	4
A1	0.015	-	0.39	-	4
A2	0.115	0.195	2.93	4.95	-
B	0.014	0.022	0.356	0.558	-
B1	0.045	0.070	1.15	1.77	8, 10
C	0.008	0.014	0.204	0.355	-
D	0.355	0.400	9.01	10.16	5
D1	0.005	-	0.13	-	5
E	0.300	0.325	7.62	8.25	6
E1	0.240	0.280	6.10	7.11	5
e	0.100 BSC		2.54 BSC		-
e_A	0.300 BSC		7.62 BSC		6
e_B	-	0.430	-	10.92	7
L	0.115	0.150	2.93	3.81	4
N	8		8		9

Rev. 0 12/93

Notice

1. Descriptions of circuits, software and other related information in this document are provided only to illustrate the operation of semiconductor products and application examples. You are fully responsible for the incorporation or any other use of the circuits, software, and information in the design of your product or system. Renesas Electronics disclaims any and all liability for any losses and damages incurred by you or third parties arising from the use of these circuits, software, or information.
2. Renesas Electronics hereby expressly disclaims any warranties against and liability for infringement or any other claims involving patents, copyrights, or other intellectual property rights of third parties, by or arising from the use of Renesas Electronics products or technical information described in this document, including but not limited to, the product data, drawings, charts, programs, algorithms, and application examples.
3. No license, express, implied or otherwise, is granted hereby under any patents, copyrights or other intellectual property rights of Renesas Electronics or others.
4. You shall not alter, modify, copy, or reverse engineer any Renesas Electronics product, whether in whole or in part. Renesas Electronics disclaims any and all liability for any losses or damages incurred by you or third parties arising from such alteration, modification, copying or reverse engineering.
5. Renesas Electronics products are classified according to the following two quality grades: “Standard” and “High Quality”. The intended applications for each Renesas Electronics product depends on the product’s quality grade, as indicated below.

   "Standard": Computers; office equipment; communications equipment; test and measurement equipment; audio and visual equipment; home electronic appliances; machine tools; personal electronic equipment; industrial robots; etc.

   "High Quality": Transportation equipment (automobiles, trains, ships, etc.); traffic control (traffic lights); large-scale communication equipment; key financial terminal systems; safety control equipment; etc.

   Unless expressly designated as a high reliability product or a product for harsh environments in a Renesas Electronics data sheet or other Renesas Electronics document, Renesas Electronics products are not intended or authorized for use in products or systems that may pose a direct threat to human life or bodily injury (artificial life support devices or systems; surgical implantations; etc.), or may cause serious property damage (space system; undersea repeaters; nuclear power control systems; aircraft control systems; key plant systems; military equipment; etc.). Renesas Electronics disclaims any and all liability for any damages or losses incurred by you or any third parties arising from the use of any Renesas Electronics product that is inconsistent with any Renesas Electronics data sheet, user’s manual or other Renesas Electronics document.
6. When using Renesas Electronics products, refer to the latest product information (data sheets, user’s manuals, application notes, “General Notes for Handling and Using Semiconductor Devices” in the reliability handbook, etc.), and ensure that usage conditions are within the ranges specified by Renesas Electronics with respect to maximum ratings, operating power supply voltage range, heat dissipation characteristics, installation, etc. Renesas Electronics disclaims any and all liability for any malfunctions, failure or accident arising out of the use of Renesas Electronics products outside of such specified ranges.
7. Although Renesas Electronics endeavors to improve the quality and reliability of Renesas Electronics products, semiconductor products have specific characteristics, such as the occurrence of failure at a certain rate and malfunctions under certain use conditions. Unless designated as a high reliability product or a product for harsh environments in a Renesas Electronics data sheet or other Renesas Electronics document, Renesas Electronics products are not subject to radiation resistance design. You are responsible for implementing safety measures to guard against the possibility of bodily injury, injury or damage caused by fire, and/or danger to the public in the event of a failure or malfunction of Renesas Electronics products, such as safety design for hardware and software, including but not limited to redundancy, fire control and malfunction prevention, appropriate treatment for aging degradation or any other appropriate measures. Because the evaluation of microcomputer software alone is very difficult and impractical, you are responsible for evaluating the safety of the final products or systems manufactured by you.
8. Please contact a Renesas Electronics sales office for details as to environmental matters such as the environmental compatibility of each Renesas Electronics product. You are responsible for carefully and sufficiently investigating applicable laws and regulations that regulate the inclusion or use of controlled substances, including without limitation, the EU RoHS Directive, and using Renesas Electronics products in compliance with all these applicable laws and regulations. Renesas Electronics disclaims any and all liability for damages or losses occurring as a result of your noncompliance with applicable laws and regulations.
9. Renesas Electronics products and technologies shall not be used for or incorporated into any products or systems whose manufacture, use, or sale is prohibited under any applicable domestic or foreign laws or regulations. You shall comply with any applicable export control laws and regulations promulgated and administered by the governments of any countries asserting jurisdiction over the parties or transactions.
10. It is the responsibility of the buyer or distributor of Renesas Electronics products, or any other party who distributes, disposes of, or otherwise sells or transfers the product to a third party, to notify such third party in advance of the contents and conditions set forth in this document.
11. This document shall not be reprinted, reproduced or duplicated in any form, in whole or in part, without prior written consent of Renesas Electronics.
12. Please contact a Renesas Electronics sales office if you have any questions regarding the information contained in this document or Renesas Electronics products.

(Note 1) “Renesas Electronics” as used in this document means Renesas Electronics Corporation and also includes its directly or indirectly controlled subsidiaries.

(Note 2) “Renesas Electronics product(s)” means any product developed or manufactured by or for Renesas Electronics.

(Rev.4.0-1 November 2017)

RENESAS

SALES OFFICES Renesas Electronics Corporation http://www.renesas.com

Refer to "http://www.renesas.com/" for the latest and detailed information.

Renesas Electronics Corporation
TOYOSU FORESIA, 3-2-24 Toyosu, Koto-ku, Tokyo 135-0061, Japan

Renesas Electronics America Inc.
1001 Murphy Ranch Road, Milpitas, CA 95035, U.S.A.
Tel: +1-408-432-8888, Fax: +1-408-434-5351

Renesas Electronics Canada Limited
9251 Yonge Street, Suite 8309 Richmond Hill, Ontario Canada L4C 9T3
Tel: +1-905-237-2004

Renesas Electronics Europe Limited
Dukes Meadow, Millboard Road, Bourne End, Buckinghamshire, SL8 5FH, U.K
Tel: +44-1628-651-700

Renesas Electronics Europe GmbH
Arcadiastrasse 10, 40472 Düsseldorf, Germany
Tel: +49-211-6503-0, Fax: +49-211-6503-1327

Renesas Electronics (China) Co., Ltd.
Room 1709 Quantum Plaza, No.27 ZhichunLu, Haidian District, Beijing, 100191 P. R. China
Tel: +86-10-8235-1155, Fax: +86-10-8235-7679

Renesas Electronics (Shanghai) Co., Ltd.
Unit 301, Tower A, Central Towers, 555 Langao Road, Putuo District, Shanghai, 200333 P. R. China
Tel: +86-21-2226-0888, Fax: +86-21-2226-0999

Renesas Electronics Hong Kong Limited
Unit 1601-1611, 16/F., Tower 2, Grand Century Place, 193 Prince Edward Road West, Mongkok, Kowloon, Hong Kong
Tel: +852-2265-6688, Fax: +852 2886-9022

Renesas Electronics Taiwan Co., Ltd.
13F, No. 363, Fu Shing North Road, Taipei 10543, Taiwan
Tel: +886-2-8175-9600, Fax: +886 2-8175-9670

Renesas Electronics Singapore Pte. Ltd.
80 Bendemeer Road, Unit #06-02 Hyflux Innovation Centre, Singapore 339949
Tel: +65-6213-0200, Fax: +65-6213-0300

Renesas Electronics Malaysia Sdn.Bhd.
Unit 1207, Block B, Menara Amcorp, Amcorp Trade Centre, No. 18, Jln Persiaran Barat, 46050 Petaling Jaya, Selangor Darul Ehsan, Malaysia
Tel: +60-3-7955-9390, Fax: +60-3-7955-9510

Renesas Electronics India Pvt. Ltd.
No.777C, 100 Feet Road, HAL 2nd Stage, Indiranagar, Bangalore 560 038, India
Tel: +91-80-67208700, Fax: +91-80-67208777

Renesas Electronics Korea Co., Ltd.
17F, KAMCO Yangjae Tower, 262, Gangnam-daero, Gangnam-gu, Seoul, 06265 Korea
Tel: +82-2-558-3737, Fax: +82-2-558-5338

© 2018 Renesas Electronics Corporation. All rights reserved.

Colophon 7.2

Looking for pricing, stock, or lifecycle information?

Click below to explore more details on WIN SOURCE:

- View ISL8483EIBZ-T on WIN SOURCE
- Intersil Information

Optimize Your Supply Chain with WIN SOURCE Solutions

- Global Sourcing Solution
- Obsolete Management
- Cost Control Management
- Shortage Management
- Alternative Solution
- Excess Inventory Management