THE DATASHEET OF

SSHB10H-22014

SSHB10H-22014

Aliases (UALSB122014000)

KEMET, SSHB10H, AC Line Filters, Dual Mode, 1.4 mH

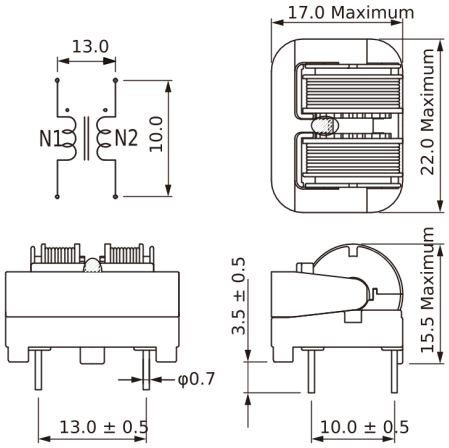

Click here for the 3D model.

Dimensions	
L	22mm MAX
T	17mm MAX
H	15.5mm MAX
LL	3.5mm +/-0.5mm
S	13mm +/-0.5mm
S1	10mm NOM
Wire Size	0.45mm

Packaging Specifications	
Packaging	Tray
Packaging Quantity	300
Typical Component Weight	10 g

General Information	
Series	SSHB10H
Style	Through-Hole
RoHS	Yes
Notes	Marking: 22 Lot No.
Miscellaneous	Temperature Rise Maximum: 60 K.
Core	Mn-Zn Ferrite

Specifications	
Voltage AC	250 VAC, 320 VAC (IEC60664-1)
Inductance	1.4 mH (10 kHz)
Current	2.2 A
Temperature Range	-40/+130°C
DC Resistance	0.12 Ohms (Per Line)

Statements of suitability for certain applications are based on our knowledge of typical operating conditions for such applications, but are not intended to constitute - and we specifically disclaim - any warranty concerning suitability for a specific customer application or use. This Information is intended for use only by customers who have the requisite experience and capability to determine the correct products for their application. Any technical advice inferred from this Information or otherwise provided by us with reference to the use of our products is given gratis, and we assume no obligation or liability for the advice given or results obtained.

© 2006 - 2024 KEMET

Looking for pricing, stock, or lifecycle information?

Click below to explore more details on WIN SOURCE:

- View SSHB10H-22014 on WIN SOURCE
- Kemet Information

Optimize Your Supply Chain with WIN SOURCE Solutions

- Global Sourcing Solution
- Obsolete Management
- Cost Control Management
- Shortage Management
- Alternative Solution
- Excess Inventory Management